ORDER NO. VQS0281-4
D5

Panasonic

D-3 1/2" DIGITAL

STUDIO VTR

AJ-D350-P/E

NTSC/PAL

Operating Instructions & Service Manual

V. 5-0

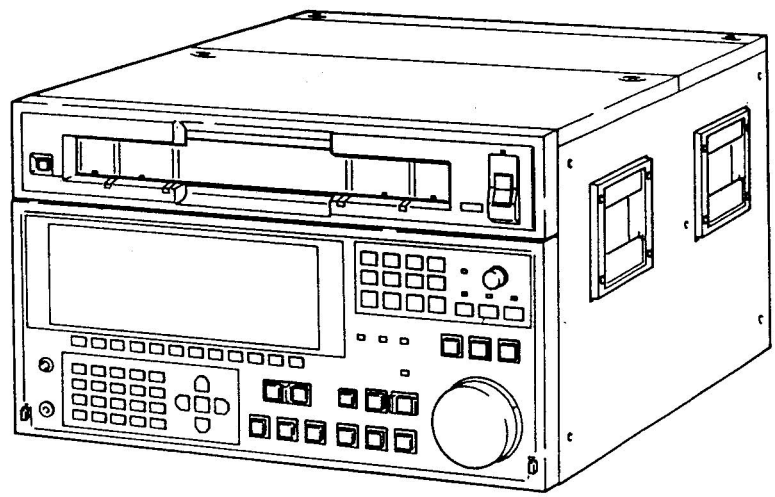

© 1995 Matsushita Electric Corporation of America.
All rights reserved. Unauthorized copying and distribution is a violation of law.

Broadcast Systems

FILE NO. VSD9106M001-5

⚠ WARNING
This service literature is designed for experienced repair technicians only and is not designed for use by the general public. It does not contain warnings or cautions to advise non-technical individuals of potential dangers in attempting to service a product. Products powered by electricity should be serviced or repaired only by experienced professional technicians. Any attempt to service or repair the product or products dealt with in this service literature by anyone else could result in serious injury or death.

D-5 1/2" DIGITAL

STUDIO VTR
AJ-D350

INTRODUCTION

This Service Manual contains all operation and technical information for use and service of the Panasonic 1/2" Digital Studio Video Tape Recorder model AJ-D350.
This Service Manual Ver. 5-0 is available from serial number B5TMGXXXX for NTSC and PAL.
The following software has been up dated from above serial number.

Software	NTSC	PAL
FRONT	N2.12	P2.12
SYSCON	N2.17	P2.17
REMOTE	N2.12	N2.12
AV	N2.11	P2.11
TC	N2.11	P2.11
AT	N1.30	P1.30
REEL	N1.61	P1.61
CAP	N1.50	N1.50
DRUM	N0.01	N0.01

Contents of Service Manual

Operation Instruction
Section 1. Technical Descriptions
Technical Information
Supplement Service Manual
Section 2. Maintenance & Mechanical Adjustment
Section 3. Electrical Adjustment
Abbreviations and IC Information
Section 4. Modules
(1) Block Diagrams
(2) Schematic Diagrams
(3) Printed Circuit Boards Diagrams
Section 5. Exploded Views & Parts List
(1) Electrical Parts List
(2) Exploded Views and Mechanical Parts List

Panasonic
Broadcast Systems

VSD9106M002-4

OPERATING INSTRUNCTION

Please attatch your Operating Instruction No. VQT5887 which has been already distributed to your service brunch.

Service Manual

Supplement
Service
Manual

Panasonic
Broadcast Systems

Order No. VSD9503T001

Technical Information

Broadcast Product

SUBJECT D3 Tool Kit (Part NO. VFK0813C)

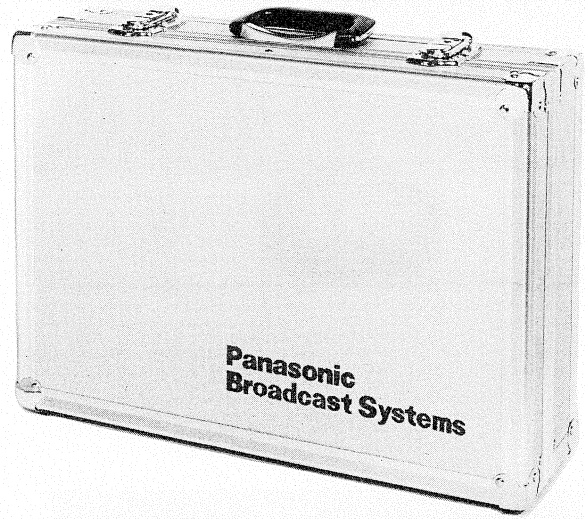

Tool Kit and Check Light part number have been changed as follows.

Part Number					
Ref. No.	Original Part No.	New Part No.	Part Name & Descriptions	Pcs	Remarks
– – – –	VFK0813B VFK0936	VFK0813C VFK0948	Tool Kit Check Light	1 1	

Panasonic

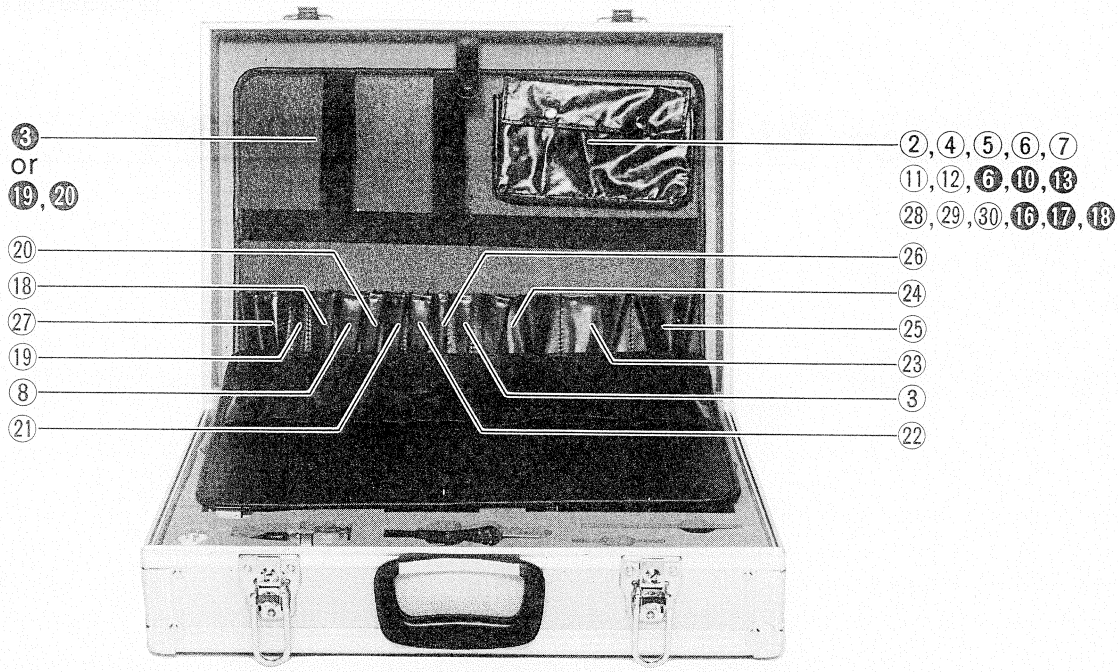

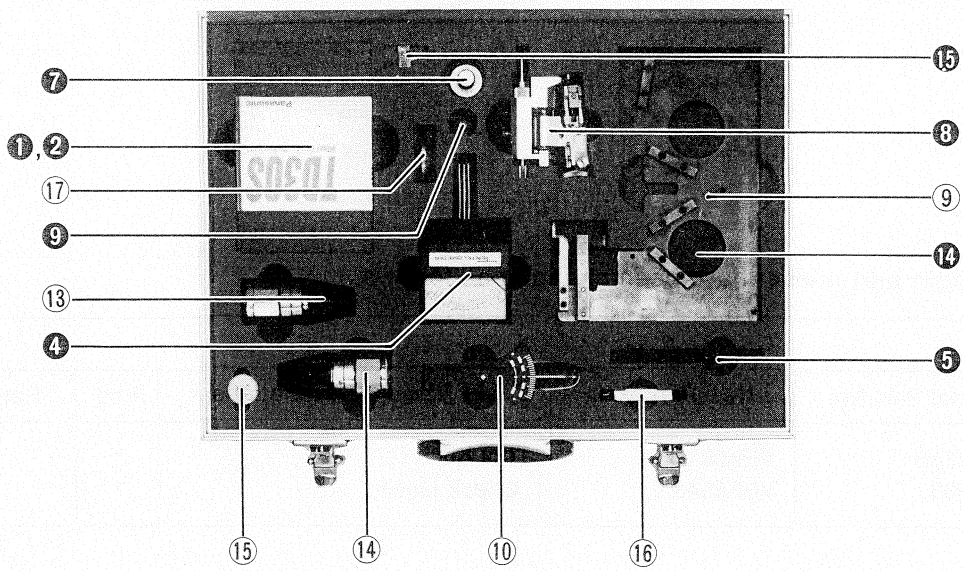

○ : STANDARD TOOLS

● : OPTIONAL TOOLS (Not included in Tool Case)

Standard Servicing Fixture & Tools

1 VFK0812
Tool Case

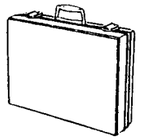

2 VFK293
Post Driver

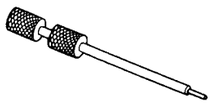

3 VFK0948 (or purchase locally)
Check Light

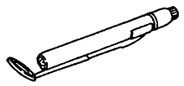

4 VFK0326 (or purchase locally)
Hex. Wrench Set

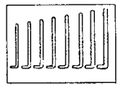

Gosho's
Hex. keys No. 505-G
1.27, 1.5, 2.0, 2.5, 3.0

5 VFK0446
Fine Adjustment Screw Driver
(3mmϕ)

6 VFK0357 (ϕ1.5)
7 VFK0358 (ϕ2)
Eccentric Screwdriver

8 VFK0676 (or purchase locally)
Nut Driver (7mm)

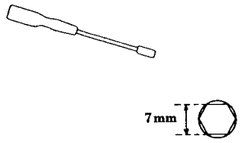

9 VFK0719
Mech. Neutral Adjustment
Plate

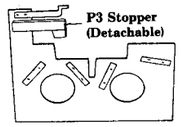

10 VFK66
Fan Type Tension Gauge

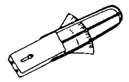

(±2000 grams max.)

11 MOR265
Morlytone Grease (Black)
(for metal part)

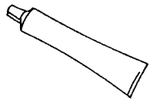

12 VFK0749
Froiral Grease (White)
(for plastic part)

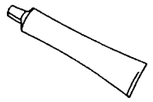

13 VFK71 (150g max.)
14 VFK0133 (1200g max.)
Dial Torque Gauge

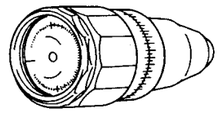

15 VFK0134
Dial Torque Gauge Adaptor

16 VFK0363
Post Height Fixture

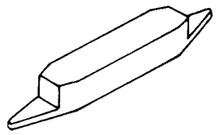

17 VFK0772
Reel Height Adj. Tool

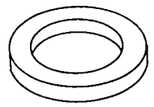

18 VFK0337
Philips Driver (Large)

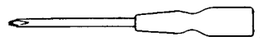

19 VFK0369
Tweezers

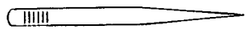

20 VFK0366
Philips Driver (Small)

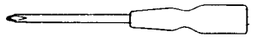

21 VFK0367
Screw Driver

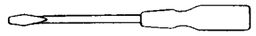

22 VFK0368
Core Adjustment Driver

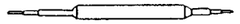

23 VFK0335
Retaining Remover

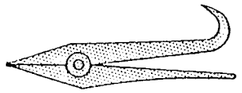

24 VFK0371
Radio Prier

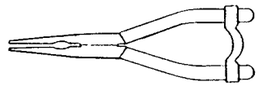

25 VFK0372
Cutter Prier

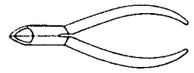

26 VFK0338
Trimmer Adjustment Driver

27 VFK0818
Screwdriver

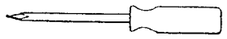

28 VFK0910
Post Shell Driver (1)

29 VFK0920
Post axis Driver (4) (2mm)

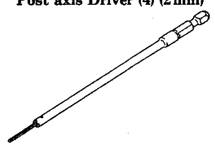

30 VFK0912
Post axis Driver (3) (1.5mm)

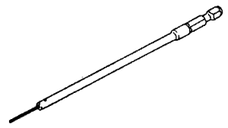

CONTENTS OF D3 TOOL KIT

Ref. No.	Part No.	Q'ty	Tool Name	AJ-D350	AJ-D310/D320	AJ-D340
1	VFK0812	1	Tool Case			
2	VFK0293	1	Post Driver	V	V	V
3	VFK0948	1	Check Light	V	V	V
4	VFK0326	1	Hex Wrench Set	V	V	V
5	VFK0446	1	Fine Adjustment Screw Driver (3mmϕ)	V	V	V
6	VFK0357	1	Eccentric Screwdriver (ϕ1.5)	V	V	V
7	VFK0358	1	Eccentric Screwdriver (ϕ2)	V	V	V
8	VFK0676	1	Nut Driver	V	V	V
9	VFK0719	1	Mech Neutral Adjustment Plate	V		V
10	VFK66	1	Fan type Tension Gauge	V	V	V
11	MOR265	1	Morlytone Grease (Black)	V	V	V
12	VFK0749	1	Froiral Grease (White)	V	V	V
13	VFK71	1	Dial Torque Gauge (150g)	V		V
14	VFK0133	1	Dial Torque Gauge (1200g)	V	V	V
15	VFK0134	1	Dial Torque Gauge Adaptor	V	V	V
16	VFK0363	1	Post Height Fixture	V	V	V
17	VFK0772	1	Reel Height Adjustment	V		V
18	VFK0337	1	Philips Driver (Large)	V	V	V
19	VFK0369	1	Tweezers	V	V	V
20	VFK0366	1	Philips Driver (Small)	V	V	V
21	VFK0367	1	Screw Driver	V	V	V
22	VFK0368	1	Core Adjustment Driver	V	V	V
23	VFK0335	1	Retaining Remover	V	V	V
24	VFK0371	1	Radio Prier	V	V	V
25	VFK0372	1	Cutter Prier	V	V	V
26	VFK0338	1	Trimmer Adjustment Driver	V	V	V
27	VFK0818	1	Screwdriver	V	V	V
28	VFK0910	1	Post Shell Driver (1)	V		V
29	VFK0920	1	Post axis Driver (4) (2mm)	V		V
30	VFK0912	1	Post axis Driver (3) (1.5mm)	V		V

Optional Servicing Fixtures & Tools

1 **VFM6180EC (PAL)**
2 **VFM6080EC (NTSC)**
3 **VFM6181EC (PAL)**
3 **VFM6081EC (NTSC)**
VFM6186EC (PAL)
VFM6086EC (NTSC)
Alignment Tape

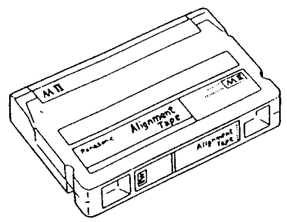

4 **VFK0132**
Back Tension Meter

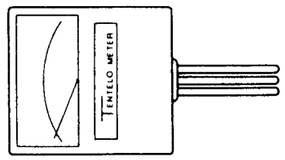

Tentelo Meter
Model: T2-H7-UM
(7 ounces, 200 grams)

5 **VFK0722**
Inclined Post Angle Fixture

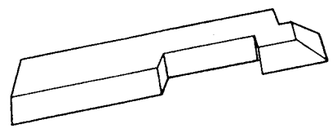

6 **VFK0742**
Micro Meter Pick-up Fixture

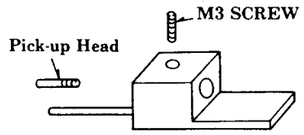

7 **VFK0771**
Calibration Block

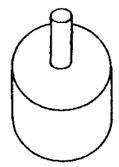

8 **VFK0737A**
Drum Replacement Tool

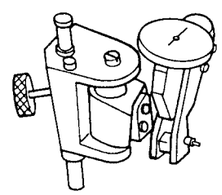

9 **VFK0779**
Position Change Driver

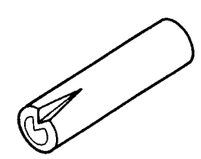

10 **VFK0811**
Hex Screw

11 **VFK0740**
12 **Torque Wrench A (6kg)**
VFK0878
Torque Wrench (2kg~12kg)

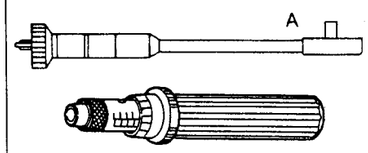

13 **VFK0741**
Adaptor
Screwdriver

14 **VFK0761**
D310 Mech Neutral Plate

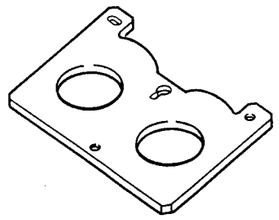

15 **VFK0760**
D310 P2 Tension Post Gain
Adjustment Tool

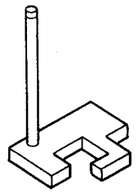

16 **VFK0880**
17 **VFK0881**
Cross Point for VFK0878
18 **VFK0879**
Hexagon Head Bit

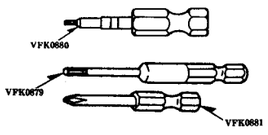

OPTIONAL TOOL (These Tools are not included in this TOOL CASE)

Ref. No.	Part No.	Q'ty	Tool Name	AJ-D350	AJ-D310/D320	AJ-D340
❶	VFM6180EC (PAL) VFM6080EC (NTSC)	1	Alignment Tape (1)	V	V	V
❷	VFM6181EC (PAL) VFM6081EC (NTSC)	1	Alignment Tape (2)	V	V	V
❸	VFM6186EC-R (PAL) VFM6086EC-R (NTSC)	1	Alignment Tape (3)	V	V	V
❹	VFK0132	1	Tension Meter	V	V	V
❺	VFK0722	1	Inclined Post Angle Fixture	V		V
❻	VFK0742	1	Micro Meter Pick-up Fixture	V		V
❼	VFK0771	1	Calibration Block	V		V
❽	VFK0737A	1	Center Drum Replacement Tool	V		V
❾	VFK0779	1	Position Change Driver	V		V
❿	VFK0811	1	Hex Screw	V		V
⓫	VFK0740	1	Torque Wrench A	V		V
⓬	VFK0878	1	Torque Wrench B	V		V
⓭	VFK0741	1	Torque Wrench A adaptor	V		V
⓮	VFK0761	1	D310 Mech Neutral Plate		V	V
⓯	VFK0760	1	D310 P2 Tension Post Gain Adjustment Tool		V	
⓰	VFK0880	1	Cross Point for VFK0878	V		V
⓱	VFK0881	1	Cross Point for VFK0878	V		V
⓲	VFK0879	1	Hexagon Head Bit		V	
⓳	VFK0865	1	Drum Replacement Tool		V	
⓴	VFK0866	1	VFK0865 Adaptor for Portable		V	

19 **VFK0865**
Drum Replacement Tool ※

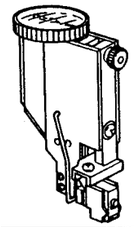

20 **VFK0866**
VFK0865 Adaptor for Portable ※

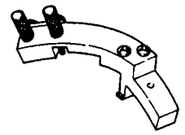

※ VFK0865 and VFK0866 have included in special box. If you want to install the special box in Tool Case, please install No. 3 position instead of alignment tape.

Order No. VSD9503T002

Technical Information

Broadcast Product

SUBJECT : Digital VTR Service Fixture and Tools List Rev.1

This is to provide information about the Digital VTR Jigs and Tools for all current Digital VTR Products.

This VTR Jigs and Tools List contains all the equipments required to perform proper alignment of digital VTRs.

A circle symbol on the list means that the item is necessary for the complete maintenance and service of the listed machine.

Also the following Tools have been added.

No.	PART No.	NAME	AJ-D310,320	AJ-D340	AJ-D350	AJ-D580	TOOL KIT (VFK0813C)
46	VFK1006	Calibration Block (2) for VFK1008			△		
47	VFK1007	Calibration Block (1) for VFK1008			△		
48	VFK1008	A/C Head Tilt Measurement Tool			△		
49	VFK1031	Pick-up Head for VFK0742		AA	AA	AA	※
50	VFK1032	Connector Cable for VFK0832A	○ (S)	○ (S)	○ (S)	○ (S)	
51	VFK1037	Adaptor Cable for VFK0832A		○			

AA : Major Service Location only ○ : Available Tool S : Spare
△ : Developping ※ : Optional Servicing Fixture and Tools

Panasonic

Digital VTR JIGs and TOOLs

NO	PART NO.	NAME	AJ-D310/320	AJ-D340	AJ-D350	AJ-D580	TOOL KIT (VFK0813C)
1	VFK66	Fan Type Tension Gauge	○	○	○	○	○
2	VFK71	(150g max.) Dial Torque Gauge	○	○	○	○	○
3	VFK0132	Back Tension Meter	○	○	○	○	※
4	VFK0133	(1200g max.) Dial Torque Gauge	○	○	○	○	○
5	VFK0134	Dial Torque Gauge Adaptor	○	○	○	○	○
6	VFK0293	Post Driver	○	○	○	○	○
7	VFK0326	(or purchase locally) Hex, Wrench Set	○	○	○	○	○
8	VFK0357	(ϕ1.5) Eccentric Screwdriver	○	○	○	○	○
9	VFK0358	(ϕ2) Eccentric Screwdriver	○	○	○	○	○
10	VFK0363	Post Height Fixture	○	○	○	○	○
11	VFK0446	Fine Adjustment Screw Driver (3mmϕ)	○	○	○	○	○
12	VFK0676	Nut Driver (7mm) (or purchase locally)		○	○	○	○
13	VFK0719	Mech. Neutral Adjustment Plate		○	○	○	○
14	VFK0722	Inclind Post Angle Fixture		○	○	○	○
15	VFK0737B	Drum Replacement Tool		AA	AA	AA	※
16	VFK0740	Torque Wrench A		○	○	○	※
17	VFK0741	Adaptor Screwdriver		○	○	○	※
18	VFK0742	Micro Meter Pick-up Fixture		○	○	○	※
19	VFK0749	Froiral Grease (White) (for plastic part)		AA	AA	AA	※
20	VFK0753	10th Dubbing Simulation Tool	○	○	○	○	○
21	VFK0760	P2 Tension Post Gain Adjustment Tool			○		
22	VFK0761	Mech Neutral Plate	○				※
23	VFK0771	Calibration Block for GT-22	○				※
24	VFK0772	Reel Height Adj. Tool		AA	AA	AA	※
25	VFK0779	Position Change Driver		○	○	○	○
26	VFK0811	Hex Screw		○	○	○	※
27	VFK0832A	Linearity/Head Height Adjustment Tool	○	○	○	○	※
28	VFK0854	Rec Head PB P.C.Board	○	○	○	○	
29	VFK0862	VFK0832 Cable for Portable	○				
30	VFK0865	Drum Replacement Tool	○				
31	VFK0866	VFK0865 Adaptor for Portable	○				
32	VFK0869	Pick up Unit for VFK0737B	○				
33	VFK0878	Torque Wrench B		○(R)	○(R)	○(R)	
34	VFK0879	Hexagon Head bit	○	○	○	○	
35	VFK0881	Cross Point Adaptor For VFK0878	○				
36	VFK0910	Post Shell Driver (1)	○	○	○	○	
37	VFK0912	Post Axis Dirver (3) (1.5mm)		○	○	○	○
38	VFK0920	Post Axis Dirver (4) (2mm)		○	○	○	○
39	VFK0924	P3 Stopper (2)		○	○	○	○
40	VFK0948	Check Light		○		○	
41	VFK0954	Equalizer Adjustment Tool	○	○	○	○	○
42	VFK0955	Post Shell Driver (2) (0.9mm)				○	
43	VFK0956	Hexagon Head Bit		○	○	○	
44	VFK0986	Elmec Equalizer Adjustment Software		○	○	○	
	VFK0987	Quatech Equalizer Adjustment Software				○	
45	VFK0989	Elmec Head Height Software				○	
	VFK0990	Quatech Head Height Software	○	○	○	○	
46	VFK1006	Calibration Block (2) for VFK1008	○	○	○	○	
47	VFK1007	Calibration Block (1) for VFK1008			△		
48	VFK1008	A/C Head Tilt Measurement Tool			△		
49	VFK1031	Pick-up Head for VFK0742			△		
50	VFK1032	Connector Cable for VFK0832A		AA	AA	AA	※
51	VFK1037	Adaptor Cable for VFK0832A	○(S)	○(S)	○(S)	○(S)	
52	VFM6080EC, VFM6081EC, VFM6086EC (NTSC) Alignment Tape			○			
53	VFM6180EC, VFM6181EC. VFM6186EC (PAL) Alignment Tape		○	○	○	○	※
54	VFM5080JR, VFM5081JR (NTSC) Alignment Tape					(No. 3 only)	
55	VFM5180JR, VFM5181JR (PAL) Alignment Tape					○	
56	MOR265	Morlytone Grease (Black) (for metal part)	○	○	○	○	○
57	TTA-20	(TESA) Micro Meter		AA(PL)	AA(PL)	AA(PL)	
58	GT-22	(TESA) Micro Meter Pick-up		AA(PL)	AA(PL)	AA(PL)	
59	-----	DAQ-12 (QUATECH)	○(PL)	○(PL)	○(PL)	○(PL)	
60	-----	Nut Driver (5.5mm) (Purchase locally)	○(PL)				

AA:Major Service Location only ×:Dis-continued ○:Available Tool ◎:Newly added by modification
△:Developping PL:Purchase Locally R:Replace S:Spare
※:Optional Servicing Fixture and Tools TOOL KIT:Also includes a small quantity of general purpose Tool & Adjusters.

Servicing Fixtures & Tools

1 VFK66
Fan Type Tension Gauge

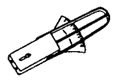

2 VFK71 (150g max.)
4 VFK0133 (1200g max.)
Dial Torque Gauge

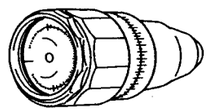

5 VFK0134
Dial Torque Gauge Adaptor

3 VFK0132
Back Tension Meter

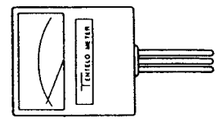

Tentelo Meter
Model: T2-H7-UM (7 ounces, 200 grams)

6 VFK0293
Post Driver

7 VFK0326 (or purchase locally)
Hex. Wrench Set

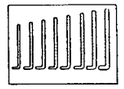

Gosho's
Hex keys No. 505-G
1.27, 1.5, 2.0, 2.5, 3.0

8 VFK0357 (ϕ1.5)
9 VFK0358 (ϕ2)
Eccentric Screwdriver

10 VFK0363
Post Height Fixture

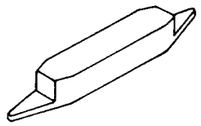

11 VFK0446
Fine Adjustment Screw Driver
(3mmϕ)

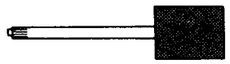

12 VFK0676 (or purchase locally)
Nut Driver (7mm)

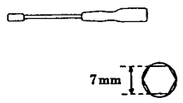

60 Nut Driver (5.5mm)
(Purchase locally)

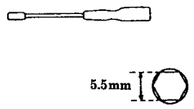

13 VFK0719
Mech. Neutral Adjustment Plate

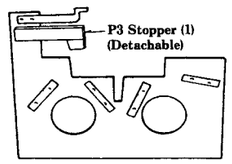

22 VFK0761
Mech Neutral Plate

14 VFK0722
Inclind Post Angle Fixture

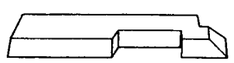

39 VFK0924
P3 Stopper (2)

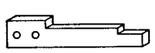

21 VFK0760
P2 Tension Post Gain
Adjustment Tool

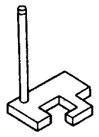

29 VFK0862
VFK0832 Cable for Portable

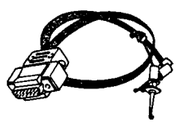

40 VFK0948
Check Light

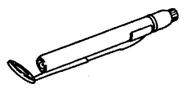

19 VFK0749
Froiral Greese (White)
(for plastic part)

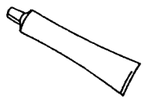

56 MOR265
Morlytone Grease (Black)
(for metal part)

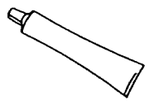

20 VFK0753
10th Dubbing Simulation Tool

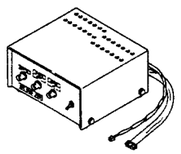

23 VFK0771
Calibration Block

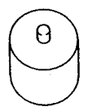

24 VFK0772
Reel Height Adj. Tool

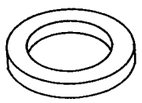

25 VFK0779
Position Change Driver

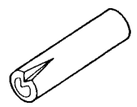

26 VFK0811
Hex Screw

27 VFK0832A (D3/D5)
Linearity/Head Height
Adjustment Tool

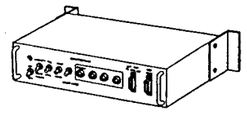

59 DAQ-12 (QUATECH)
A/D Converter Board
(Purchase Locally)

28 VFK0854
Rec Head PB P.C. Board

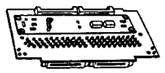

15 VFK0737B
Drum Replacement Tool

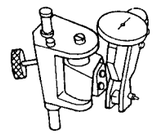

30 VFK0865
Drum Replacement Tool

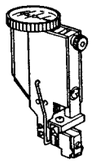

31 VFK0866
VFK0865 Adaptor for Portable

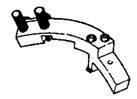

32 VFK0869
Pick up Unit for VFK0737B

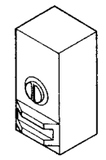

33 VFK0878
Torque Wrench B (Torque Adjustable)

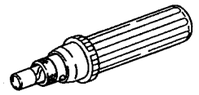

34 VFK0879
Hexagon Head Bit
(for Portable VTR)

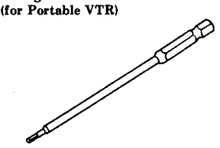

35 VFK0881
Cross Point Adaptor (for VFK0878)

43 VFK0956
Hexagon Head Bit

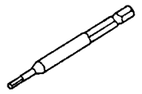

36 VFK0910
Post Shell Driver (1)

37 VFK0912
Post axis Driver (3) (1.5mm)

38 VFK0920
Post axis Driver (4) (2mm)

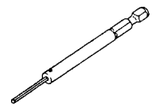

42 VFK0955
Post shell Driver (2) (0.9mm)

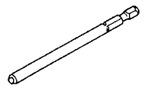

16 VFK0740
17 VFK0741
Torque Wrench A
Adaptor
Screwdriver

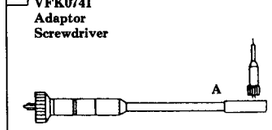

41 VFK0954
Equalizer Adjustment Tool
(Include the Software 44)

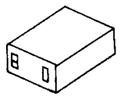

44 VFK0987 (for DAQ-12)
VFK0986 (for VFK0853)
Equalizer Adjustment Software

45 VFK0989 (for VFK0853)
VFK0990 (for DAQ-12)
Head Height Software

52 VFM6080EC / VFM6180EC
53 VFM6081EC / VFM6181EC
VFM6086EC / VFM6186EC
NTSC / PAL

D3 Alignment Tape

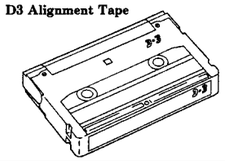

54 VFM5080JR / VFM5180JR
55 VFM5081JR / VFM5181JR
NTSC / PAL

D5 Alignment Tape

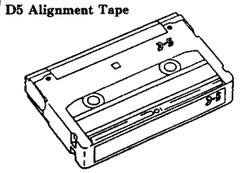

57 Maker TESA TTA-20
Micro Meter
(This is not Panasonic Tool)

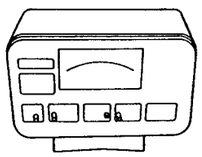

58 Maker TESA GT-22 (20g)
Micro Meter Pick Up
(This is not Panasonic Tool)

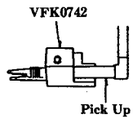

※ Purchase Locally

18 VFK0742
49 Micro Meter Pick-up Fixture
VFK1031
Pick-up Head

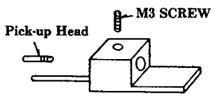

46 VFK1006
Calibration Block (2) for VFK1008

47 VFK1007
Calibration Block (1) for VFK1008

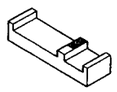

48 VFK1008
A/C Head Tilt Measurement Tool

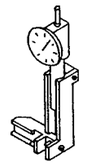

51 VFK1037
Adaptor Cable for VFK0832A

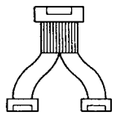

50 VFK1032
Connector Cable for VFK0832A

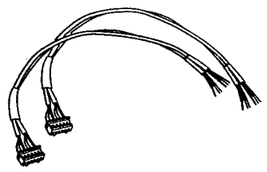

QUATECH

662 Wolf Ledges Pkwy. • Akron, OH 44311
Telephone: (216) 434-3154
Fax: (216) 434-1409

AUSTRALIA

INTERWORLD ELECTRONICS & COMPUTER
1G Eskay Road
Oakleigh South
Victoria 3167
AUSTRALIA
Telephone: (03) 563-7066
Fax: (03) 563-7337
Toll Free: 008-335103

CANADA

INTERWORLD VCR
1415 Welch st.
North Vancouver, B.C.
CANADA V7P 1B5
Telephone: 604-984-4171
Telex: 04-352875
Fax: 604-984-8357
Toll- Free: 1-800-663-6001
TORONTO OFFICE
Telephone: 416-513-7027

ENGLAND

DIAMOND POINT
INTERNATIONAL
9 North Point Business Estate
Enterprise Close
Medway City Estate
Rochester upon Medway
Kent ME2 4L4
ENGLAND
Telephone: 634-722-390
Fax: 634-722-398

FRANCE

ELEXO
BP 24-91371
Verrieres-Le-Buisson
Cedex
FRANCE
Telephone: 33-1-69302880
Telex: 600 517 F
Fax: 33-1-69306851

FINLAND

LAB HI-TECH OY
Kaantopiiri 2B
02210 Espoo
FINLAND
Telephone: +358-0-804-2522
Fax: +358-0-803-9741

GERMANY

JUPITER ELECTRONIC
SYSTEMS GMBH
Eichenweg 24
D-6454 Bruchkobel
GERMANY
Telephone: 06181/75041
Fax: 06181/79721

ISRAEL

RCM Ltd.
31 Habarzel St.
P.O. Box 39844
Tel-Aviv
ISRAEL
Telephone: 972-03-5447885
Fax: 972-03-5447290

ITALY

N.C.S. COMPUTER ITALIA
21013 Gallarate
Via Pegoraro, 2
Varese
ITALY
Telephone: 0331/770016
Fax: 0331/772000

KOREA

RM. 401
Namkog BLDG, 897-13
Daichi-Dong, Kangnam-Ku
Seoul, KOREA
Tel: 82-2-538-4001
Fax: 82-2-538-4069

NETHERLANDS

ACAL AURIEMA
doornakkersweg 26
5642 MP eindhoven
NETHERLANDS
Telephone: 040-816565
Fax: 040-811815

SINGAPORE

Bliss Services Pte Ltd
1 Rochor Canal Road
#05-04 Sim Lim Square
SINGAPORE 0718
Tel: (65) 338-1300
Fax: (65) 338-1900

SPAIN

SANTA Barbara SA
Vergos, 55bls, local 3 Bajos
08017 Barcelona
SPAIN
Tel: 34-3-203-9916
Fax: 34-3-203-9950

TESA

Switzerland	*Telephone*	*Fax*
TESA SA *Bugnon 38 CH-1020 Renens*	*021 634 15 51*	*021 635 75 35*
Pierre ROCH S.à r.l. *Bugnon 38 CH-1020 Renens*	*021 634 15 51*	*021 635 75 35*
England		
TESA METROLOGY LTD. *Halesfield 8 GB-Telford TF7 4QN*	*0952 581923*	*0952 585414*
TESA-Reference Standards Division *Bradgate Street GB-Leicester LE4 OAW*	*0533 629012*	*0533 514762*
THOMAS MERCER LTD. *Eywood Road GB-St. Albans AL1 2ND*	*0727 55313*	*0727 868455*
Germany		
LEITZ MEßTECHNIK GmbH *Siegmund-Hiepe Straße 2-12 D-6330 Wetzlar*	*06441 207 0*	*06441 207122*
TESA LEITZ GmbH *Netzestraße 32 D-7140 Ludwigsburg*	*07141 87 470*	*7141 874 788*
France		
TESA FRANCE *27-29 av. Ph.-Auguste F-75540 Paris*	*1 44 93 10 00*	*1 43 71 74 79*
TESA FRANCE 21 av. de-Lattre-de-Tassigny *F-94134 Fontenay-sous-Bois*	*1 45 14 66 00*	*1 45 14 66 11*
Italy		
TESA ITALIA S.r.l. *Via Spartaco 30/34 1-20135 Milano*	*02 5519 36 32*	*02 5501 22 33*
Japan		
TESA SEIMITSU CO. LTD. *23-1, 2 Chome, Shiba Minatoku Tokyo-Japan*	*03 3769 1421*	*03 3769 3909*
USA		
BROWN & SHARPE MANUFACTURING CO. *200 Frenchtown Road North Kingstown RI 02852-USA*	*401 886 2000*	*401 886 2762*
TESA MEASUREMENT SYSTEMS *22530 Heslip Drive Novi MI 48375-USA*	*313 347 5900*	*313 347 5906*
STANDARD GAGE CO. INC. *70 Parker Ave Poughkeepsie NY 12602-USA*	*914 471 3100*	*914 471 3143*

ORDER NO. VSD9502T001

⚠ WARNING

This service literature is designed for experienced repair technicians only and is not designed for use by the general public. It does not contain warnings or cautions to advise non-technical individuals of potential dangers in attempting to service a product. Products powered by electricity should be serviced or repaired only by experienced professional technicians. Any attempt to service or repair the product or products dealt with in this service literature by anyone else could result in serious injury or death.

Technical Information

Panasonic
Broadcast Systems

AJ-D350

1/2" DIGITAL

(PAL/NTSC)

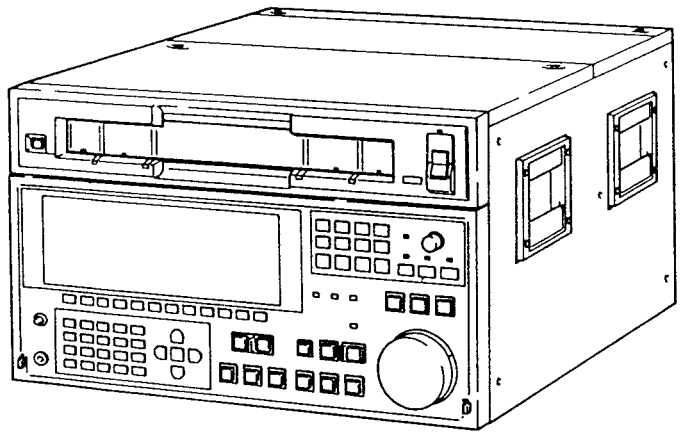

SUBJECT: CENTER DRUM REPLACEMENT AND ADJUSTMENT

RECOMMEND TEST AND SERVICE EQUIPMENT OF HEAD HEIGHT
AJ-D350 CHECK OF PROTRUSION
AJ-D350 CENTER DRUM REPLACEMENT PROCEDURES
D3 LINEARITY/HEIGHT ADJUSTMENT TOOL WITH SOFTWARE Ver. 6.2
AZIMUTH TOOL ADJUSTMENT
SCHEMATIC DIAGRAM AND CIRCUIT BOARD DIAGRAM

Panasonic

© 1995 Matsushita Electric Industrial Co., Ltd.
All rights reserved. Unauthorized copying and distribution is a violation of law.

CONTENTS

RECOMMENDED SERVICE EQUIPMENT OF HEAD HEIGHT 1-1
AD-J350 CHECK OF PROTRUSION 1-4
CENTER DRUM REPLACEMENT FLOW CHART 1-6
AJ-D350 CENTER DRUM REPLACEMENT PROCEDURES 1-8
TAPE PASS LINEARITY ADJUSTMENT FLOW CHART 1-13
RF ENVELOPE LINEARITY CONFIRMATION ... 1-14
UPPER DRUM ADJUSTMENT 1-15
P3 POST HEIGHT ADJUSTMENT 1-16
CONFIRMATION OF P3 POST INCLINED ANGLE 1-17
P4,P5 POST HEIGHT ADJUSTMENT 1-18
P6 POST HEIGHT ADJUSTMENT 1-19
A/C HEAD TILT CONFIRMATION 1-20
A/C HEAD TILT ADJUSTMENT 1-22
A/C HEAD HEIGHT ADJSUTMENT 1-24
A/C HEAD AZIMUTH ADJSUTMENT 1-25
CTL OUTPUT CONFIRMATION 1-26
TAPE TRANSPORTATION POSTS LIMIT POSITION TABLE 1-27
P7,P8,P10 AND P11 POST HEIGHT ADJUSTMENT 1-28
A/C HEIGHT HORIZONTAL POSITION COARSE ADJSUTMENT 1-29
PG SHIFTER ADJSTMENT 1-30
HEAD ADJSUTMENT TOOL CABLE CONNECTION WITH AJ-D350 1-31
LINEARITY / HEAD HEIGHT ADJUSTMENT TOOL WITH SOFTWARE VER. 6.2 1-32
LINEARITY / HEAD HEIGHT MENU VER.6.2 INSTRUCTIONS 1-35
LINEARITY VER.6.2 OPERATING INSTRUCTIONS 1-36
REC HEAD HEIGHT VER.6.2 OPERATING INSTRUCTIONS 1-39
FE HEAD HEIGHT VER.6.2 OPERATING INSTRUCTIONS 1-45
FLYING HEAD HEIGHT CONFIRMATION 1 1-48
RF ENVELOPE CONFIRMATION BY MODE CHANGE 1-51
INTRODUCTION OF DRUM AXIS VERTICALITY ADJSUTMENT PROCEDURE 1-53
A/C HEAD HORIZONTAL POSITION FINE ADJSTMENT 1-57
FINAL CONFIRMATION OF TRACKING OPTIMIZE 1-58
DRUM ELECTRICAL ADJSUTMENT FLOWCHART 1-59
PG SHIFTER ADJSUTMENT (S5) 1-60
ENVELOPE DETECTION ADJUSTMENT (S1,S2) 1-60
AT (S4) BOARD ADJUSTMENT 1-61
D/A CONVERTER FULL SCALE ADJSUTMENT 1-62
AT HEIGHT (1) ADJUSTMENT 1-63
AT HEIGHT (2) ADJUSTMENT 1-64
GAIN ADJUSTMENT 1-65
STRAIN LOOP FREQUENCY RESPONSE ADJUSTMENT 1-66
GROUP DELAY COMPENSATION ADJUSTMENT 1-67
CONFIDENCE PB CONFIRMATION 1-68
REC/PLAY CH0 (S1) / CH1 (S2) BOARD ADJSUTMENT 1-70
EQUALIZATION ADJUSTMENT (1) 1-71
EQUALIZATION ADJSUTMENT (2) 1-72
REC CURRENT AND REC EQUALIZER ADJUSTMENT (CH0) 1-74
REC CURRENT AND REC EQUALIZER ADJUSTMENT (CH1) 1-76
RF2 ENVELOPE DETECTION ADJUSTMENT ... 1-79
TOTAL CONFIRMATION 1-80
SPECTRUM ANALIZER SETUP 1-82

AZIMUTH TOOL ADJUSTMENT 2-1
VFK0832A LINEARITY / HEIGHT ADJUSTMENT TOOL BLOCK DIAGRAM / SCHEMATIC DIAGRAM 2-5

RECOMMEND TEST AND SERVICE EQUIPMENT OF HEAD HEIGHT

	PART No	NAME	Q'ty	PURPOSE
1	VFM6080 (NTSC) VFM6180 (PAL)	Alignment Tape (1)	1	Electrical Adj.
2	VFM6081 (NTSC) VFM6181 (PAL)	Alignment Tape (2)	1	Head Height Adj.
3	VFM6086 (NTSC) VFM6186 (PAL)	Alignment Tape (3)	1	Linearity Adj.
4	VFK0832A	D3 Linearity/Head Height Adjustment Tool	1	Linearity Adj. Head Height Adj.
5	VFK0737B	Drum Replacement Tool	1	Protrusion and Eccentric Adj.
6	VFK0779	Position Change Driver	1	Protrusion and Eccentric Adj.
7	VFK0740	Torque Wrench A	1	Upper Drum Replacement
8	VFK0878	Torque Wrench B	1	Upper Drum Replacement
9	VFK0741	Adaptor Screwdriver	1	Upper Drum Replacement
10	VFK0811	Hex Screw	1	Head Height Adj.
11	VFK0293	Post Driver	1	Linearity Adj.
12	VFK0936	Check Light	1	Linearity Adj.
13	VFK0358	Eccentric Screwdriver	1	A/C Horizontal Position Adj.
14	VFK0676	Nut Driver	1	A/C Head Height Adj.
15		Personal Computer	1	Linearity Head Height
16	DAQ-12 (QUATECH)	A/D Converter	1	Linearity Head Height
17	VFK0881	Cross Point Adaptor	1	Center Drum Replacement
18	VFK0989(for ELMEC) VFK0990(for QUATECH)	Head Height Soft	1	Linearity Adj. Head height Adj.
19	VFK1008	A/C Head Tilt Tool	1	A/C Head Tilt Adj.
20	VFK1006, VFK1007	Calibration Plate (1), (2)	1	A/C Head Tilt Tool Calibration

Recommend Test and Service Equipment of Head Height

1 VFM6080EC (NTSC)
2 VFM6180EC (PAL) Alignment Tape (1)
3 VFM6081EC (NTSC)
VFM6181EC (PAL) Alignment Tape (2)
VFM6086EC (NTSC)
VFM6186EC (PAL) Alignment Tape (3)

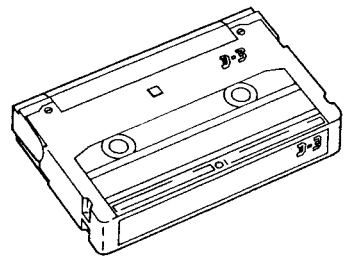

4 VFK0832A
D3 Linearity/Head Height Adjustment Tool

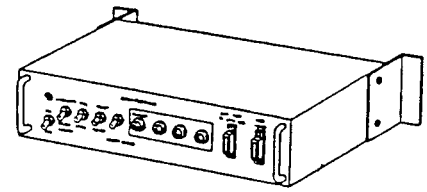

5 VFK0737B
Drum Replacement Tool

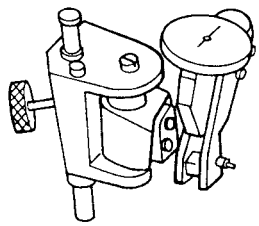

6 VFK0779
Position Change Driver

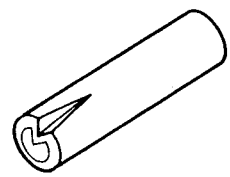

7 VFK0740
Torque Wrench A
8 VFK0878
17 Torque Wrench B
VFK0881
Cross Point Adaptor (for VFK0878)

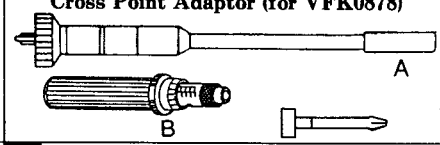

9 VFK0741
Adaptor Screwdriver

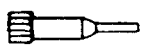

10 VFK0811
Hex Screw

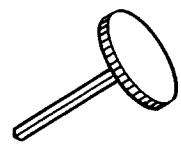

11 VFK0293
Post Driver

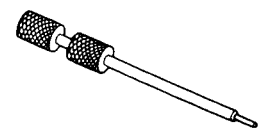

12 VFK0948 (or purchase locally)
Check Light

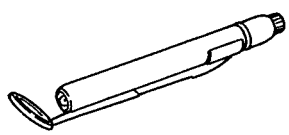

13 VFK0358
Eccentric Screwdriver

14 VFK0676
Nut Driver

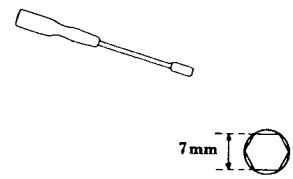

15 Personal Computer
IBM PC-AT Compatible
CPU 386/20MHz or higher
with AT BUS

16 DAQ-12 (QUATECH)
A/D Converter

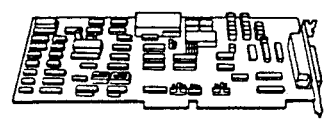

18 VFK0989 (For ELMEC)
VFK0990 (For QUATECH)
Head Height Soft

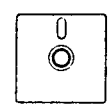

19 VFK1008
A/C Head Tilt Tool

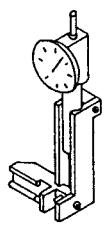

20 VFK1006
VFK1007
Calibration Plate (1), (2)

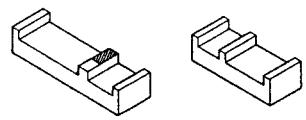

[INTRODUCTION OF NEW POST DRIVER AND VARIABLE TORQUE WRENCH]

To improve the reliability of tape pass linearity and productivity, each posts (P1 to P12) have been changed. Due to change the part, new post driver and variable torque wrench need to adjust tape pass linearity as shown below.

1 **VFK0293** **Post Driver (0.9mm)** 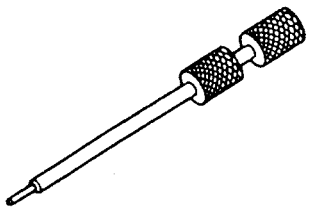	2 **VFK0910** **Post Shell Driver (1)** 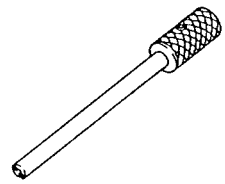	3 **VFK0912** **Post Axis Driver (3) (1.5mm)** 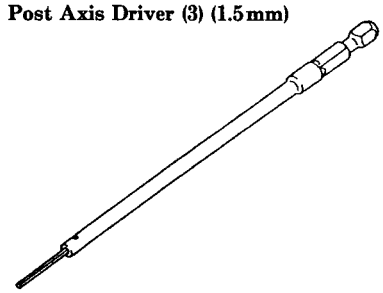
4 **VFK0920** **Post Axis Driver (4) (2.0mm)** 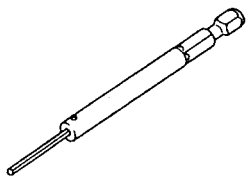	5 **VFK0878** **Torque Wrench B** 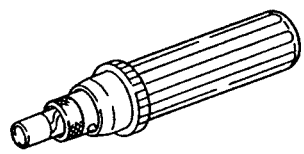	6 **VFK0955** **Post Shell Driver (2)** 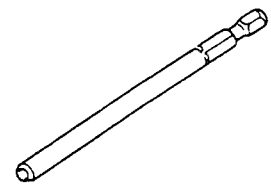

1) VFK0293 (Original Post Driver) : P2 and P3 Post Height Adjustments
2) VFK0910, VFK0912 and VFK0878: P1, P4~P12 Post Height Adjustments
3) VFK0920 and VFK0878 : A/C Horizontal Position Adjustment
4) VFK0955 : P3 Post Height Adjustment

POST HEIGHT ADJUSTMENT

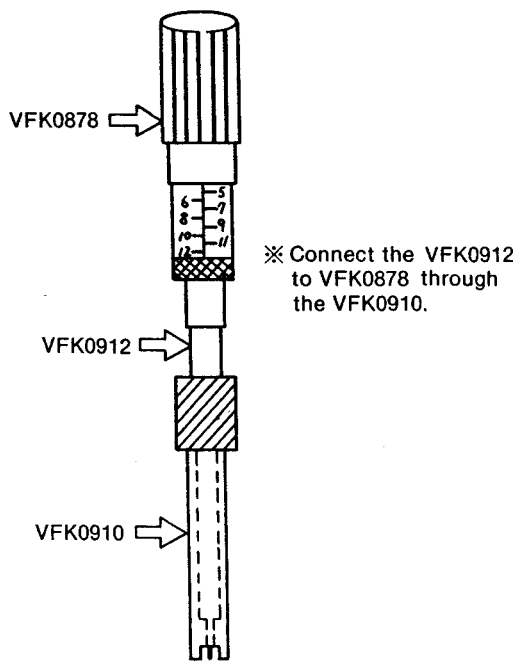

A/C HORIZONTAL POSITION ADJUSTMENT

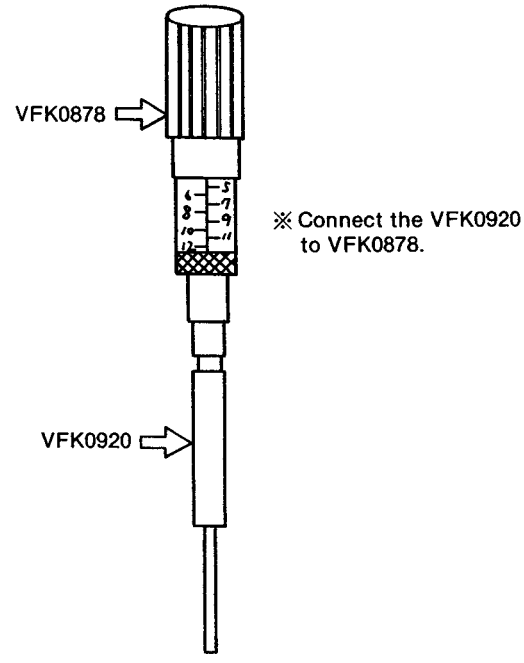

AJ-D350 CHECK OF PROTRUSION

1. Set the attachment shaft to lower position as shown in figure 1.

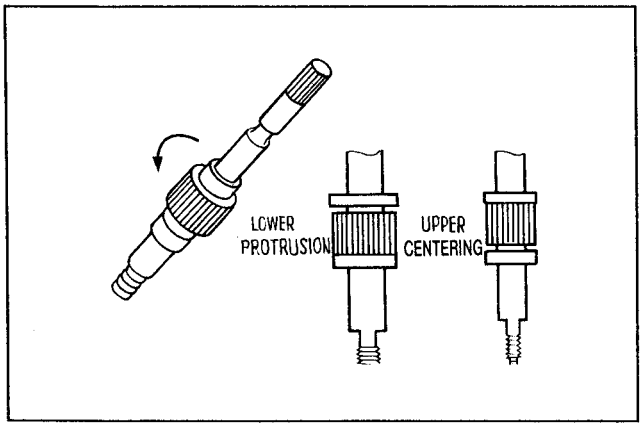

Fig. 1 attachment Shaft

2. Set the pick of center drum replacement tool to vertical position by using the pick tool as shown in figure 2 and 3.

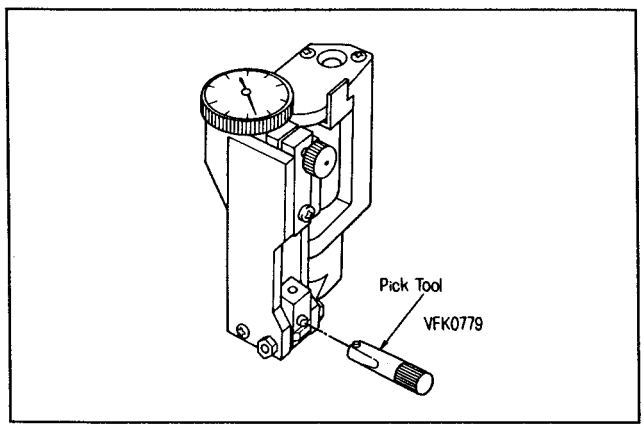

Fig. 2 Pick Tool

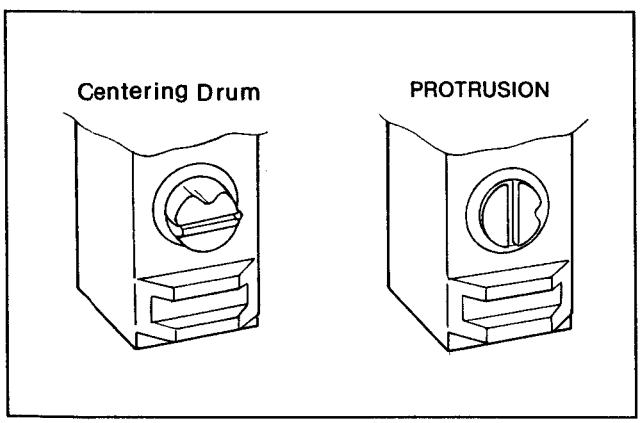

3. Install the attachment shaft to A position as shown in figure 4.

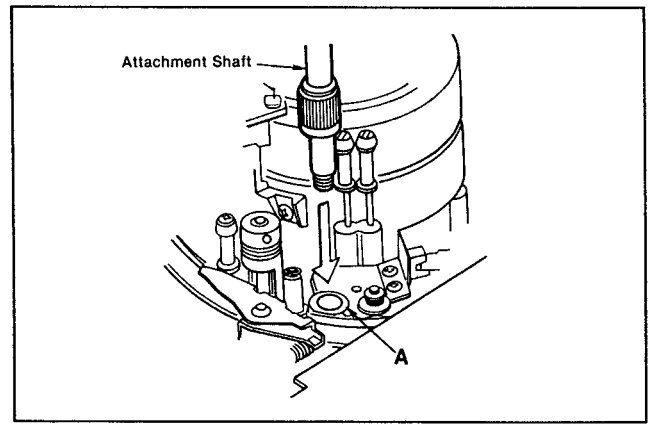

Fig. 4 Attachment Shaft

4. Unscrew the 2 screws and remove the TOP cover angle on the cassette carriage.
5. Confirm that the lever of center drum replacement tool is locked and install it on the attachment shaft as shown in figure 5.
(Do not touch the cylinder.)

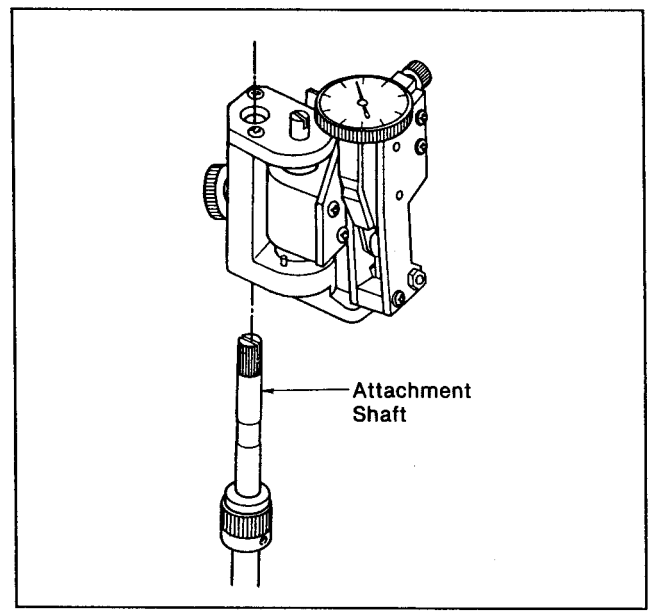

Fig. 5 Center Drum Replacement Tool

6. Set the attachment plate to touch the lower cylinder as shown in figure 6.
   And fix the volume (A).

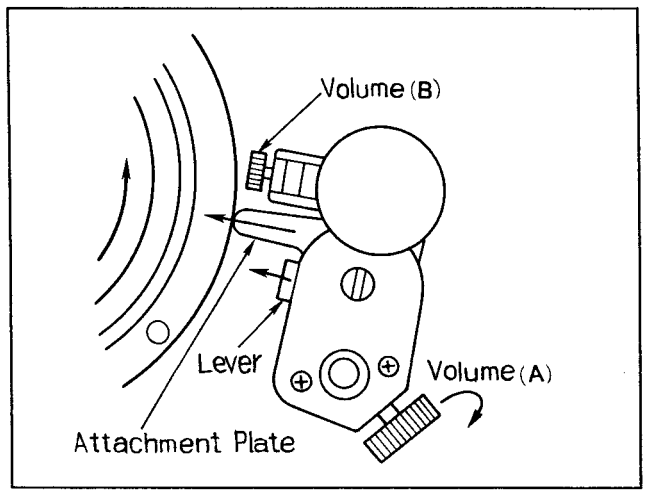

Fig. 6 Attachment Plate

7. Rotate the center drum so the pick will not touch the head chip when lever is released.
   Release lever and gently place pick on center drum.
8. Set the dial gauge to zero position.
   Adjust the volume (B) of the head adjustment plate so that the pick up point is touched to the drum and increase 60μ in indication.
9. Rotate the outer ring of the dial gauge to set the meter indication to zero.
   Slowly Rotate the middle drum until MAX deflection of meter is measures. Identify the type of head from the top of the centre drum. The minimum tip projection is as shown below.
10. If it is out of specification change the center drum.

REC Head PROTRUSION: Normal 37μ– 42μ

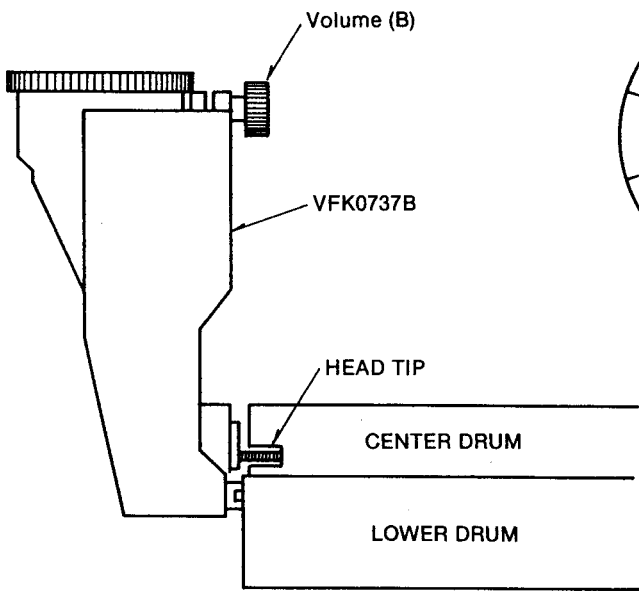

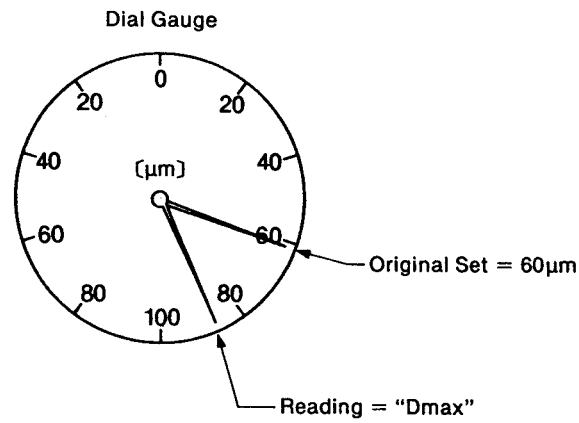

Protrusion Amount / Head Name	Head Protrusion Amount for New Head (CH0, CH1)	Standard of Replacement
R/P Heads (CH0 and CH1)	40^{+2}_{-3} (μm)	More than 17 (μm)
ERASE Heads	40^{+2}_{-3} (μm)	———

CENTER DRUM REPLACEMENT FLOW CHART

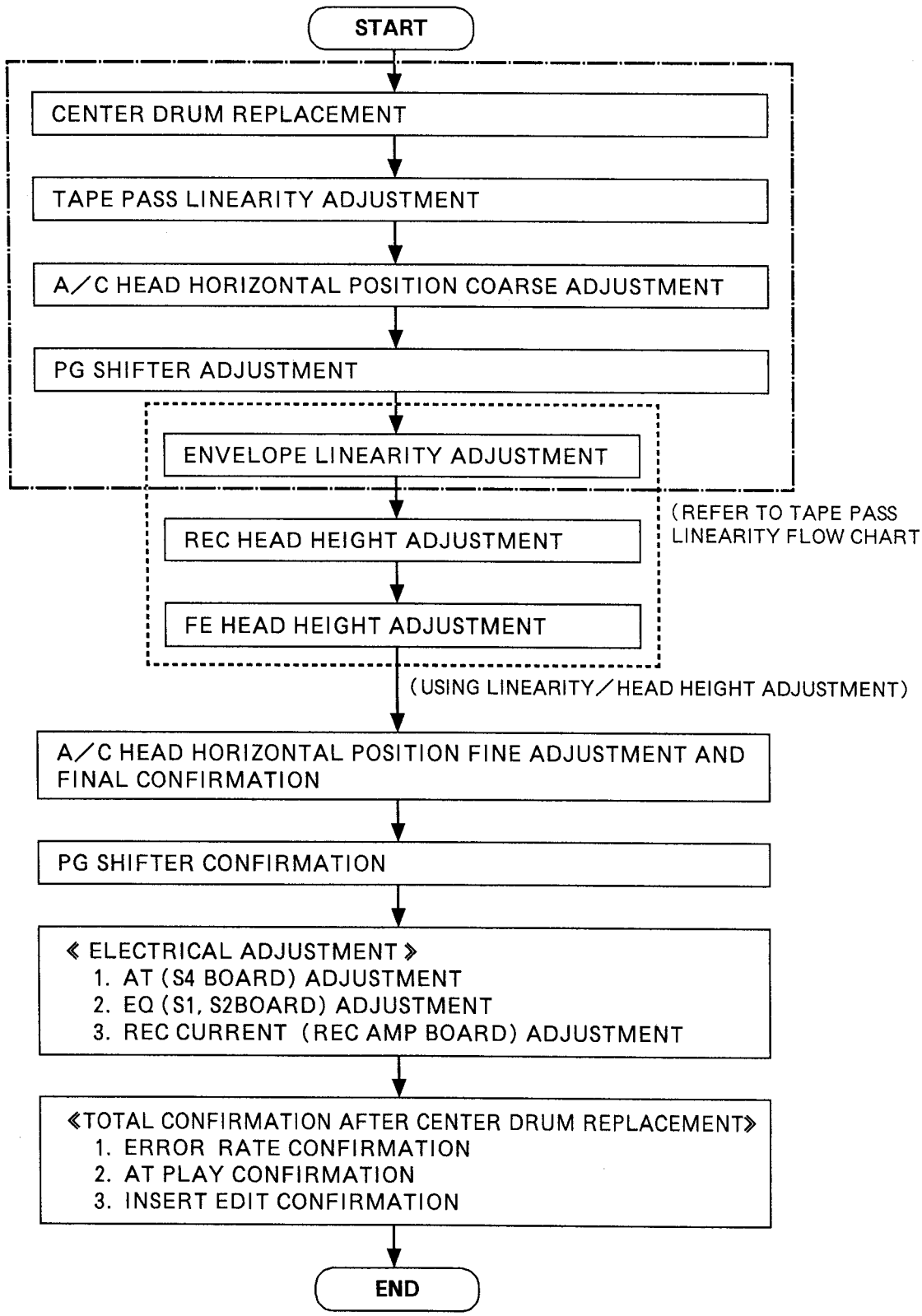

AJ-D350 CENTER DRUM REPLACEMENT PROCEDURES

1. OPEN THE TOP PANEL

2. REMOVE THE HEAD CLEANING UNIT

Remove the two screws which are not glued.
One of the screw is under of the spring, so pull the spring knob and makes the space to insert a screw driver.

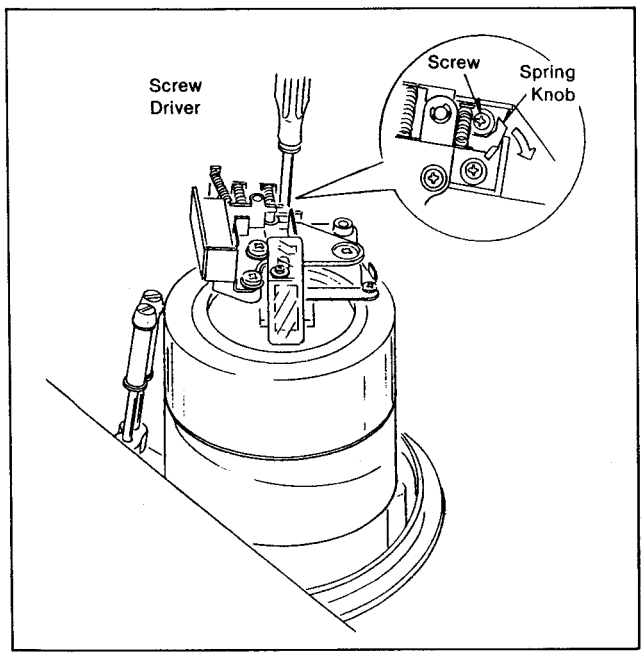

Fig. 8

3. REMOVE THE BRUSH UNIT

Loosen the screw of the brush unit stopper and separate the brush stopper unit from the brush unit, then rotates the brush unit about 90 degrees.
Remove the 2 screws (A) holding the brush unit in position see figure 9.

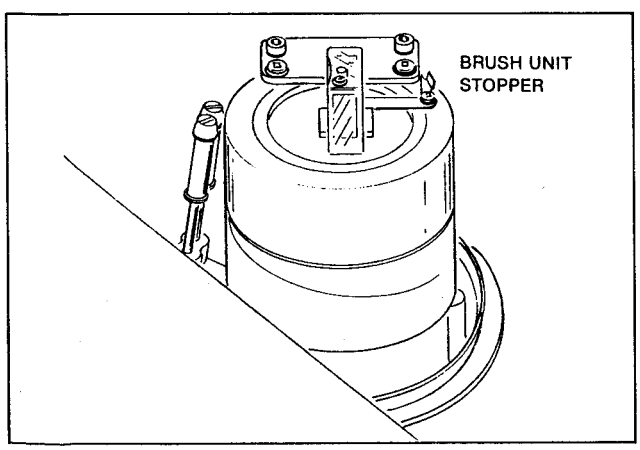

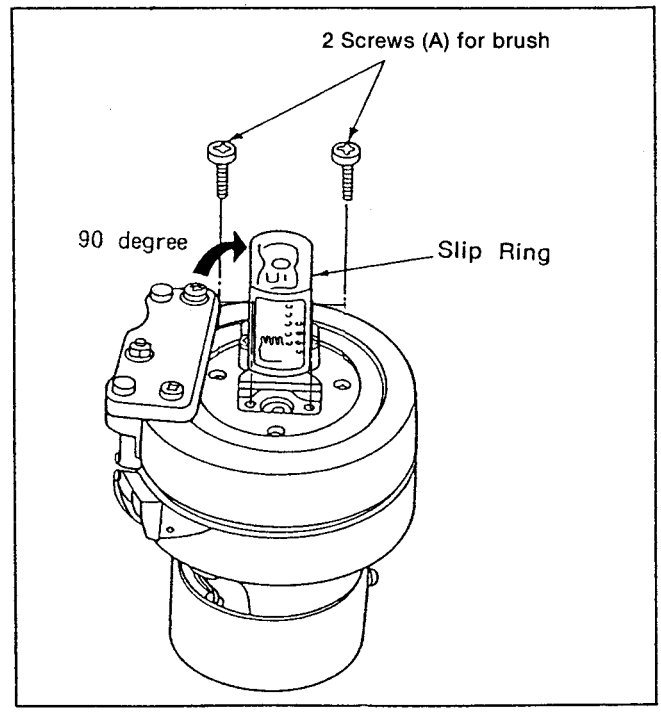

Fig. 9

4. REMOVE THE UPPER DRUM

Before removement, mark the A portion by marker pencil for setting position of arm and block as shown in Figure.

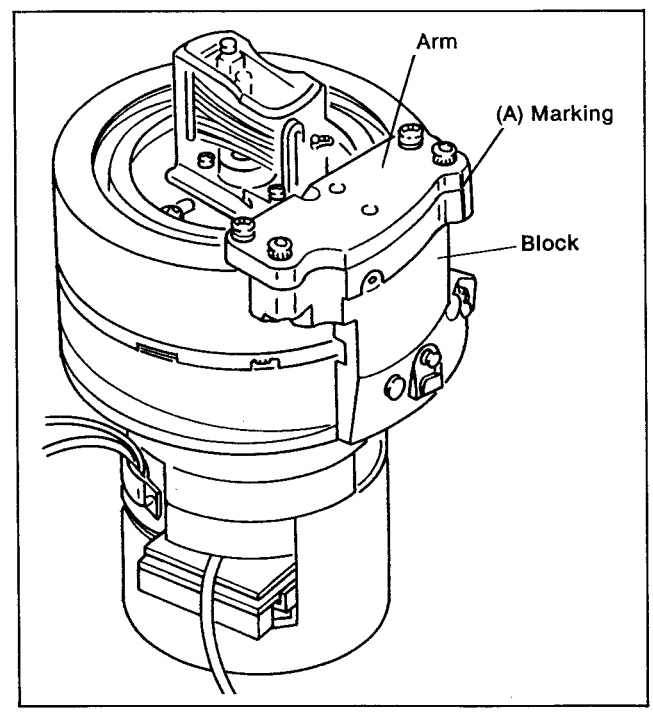

Clean the arm block and upper drum of attachment portions (A, B and C portions) as shown in Figure 23.

Unscrew the two hex screws on the upper drum by torque wrench B.
Unscrew the one hex screw on the back side of the upper drum by torque wrench A, the torque wrench A must select the rotation angle by the selector and it is necessary to attach the torque wrench adaptor.
Remove the Upper Drum unit.

Note: Place upper drum up side down on work surface.
The lower edge must not be damaged.

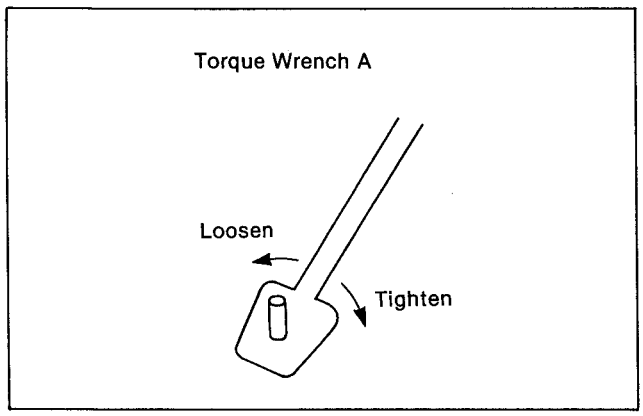

Fig. 11

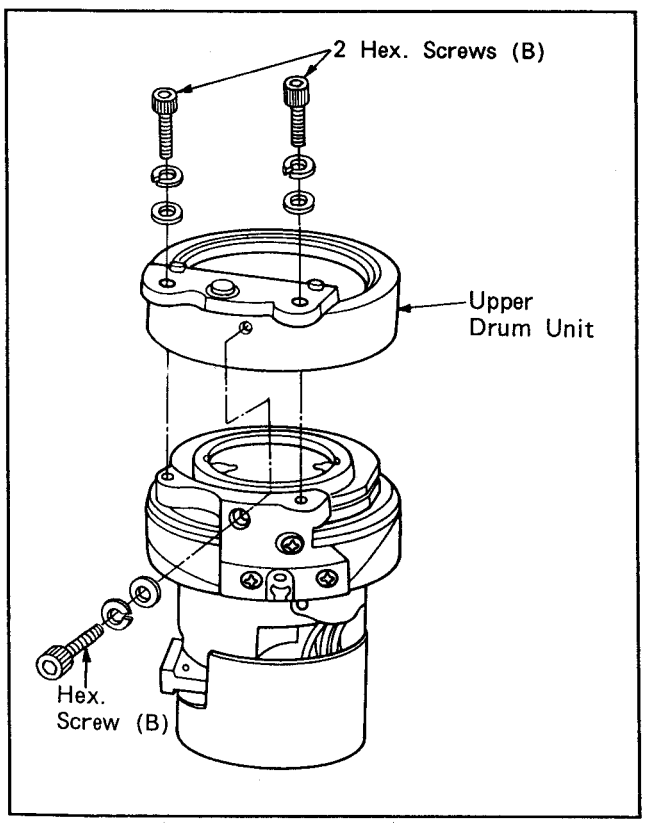

Fig. 12

5. REMOVE THE CENTER DRUM

Unscrew the two screw of the Center Drum and remove the Center Drum.
When replacing the Center Drum, it has two direction, so the correct direction of the Center Drum head A and B must be remembered.

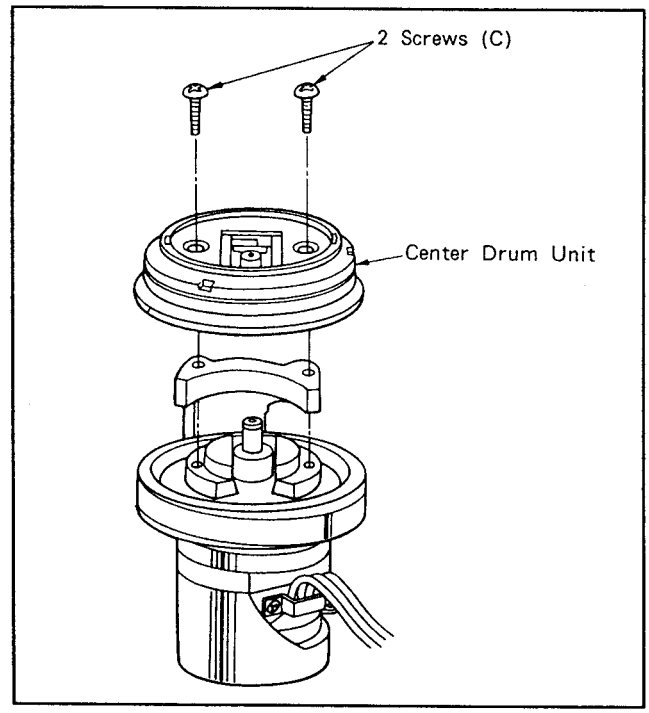

Fig. 13 Center Drum Removal

6. SET THE CENTER DRUM

Clean the tape path of the Lower Drum unit (A, B and C portions).
Check where the head chips are located and pick up the Center Drum so that your fingers never touch the head chips.
Set the Center Drum as same direction on the Lower Drum so that the head chips never touches at any place of the Lower Drum, and slightly tighten the two screws.

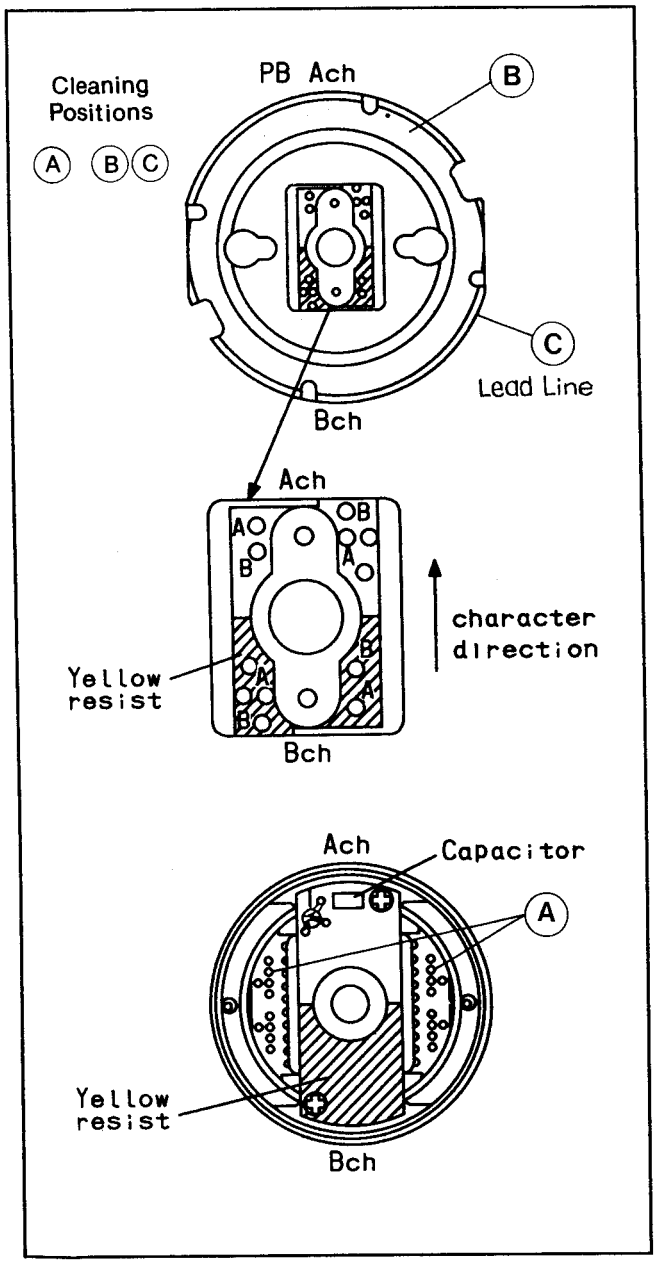

Fig. 14

7. ECCENTRIC ADJUSTMENT

1) DRUM REPLACEMENT TOOL SETUP-VFK0737B
The Drum Replacement tool has two functions, one is center drum eccentric adjustment and the other is head chip protrusion measurement.
Therefore it is necessary to select these functions.
To select the functions there are two set up portions, one is height of the dial meter and the other is head contact portion angle.
The dial meter height is changed by turning the attachment shaft. For the eccentric adjustment the dial meter is in the higher position because the measurement portion must not touch the heads and must touch the road which is just above the head chips. For the head chip protrusion measurement, the measurement pick portion must touch the head chips, so the dial meter must be lower position as shown in Figure 15.

The other setup portion of this tool is head contact portion angle. For the eccentric adjustment the head contact is horizontal to run smoothly on the surface of the center drum and for the protrusion measurement the head contact is vertical to cross the head chips. The angle can be changed by finger, but the pick tool is useful to change this contact portion easily.

2) Set the attachment shaft is upper portion by turning the center screw clockwise.

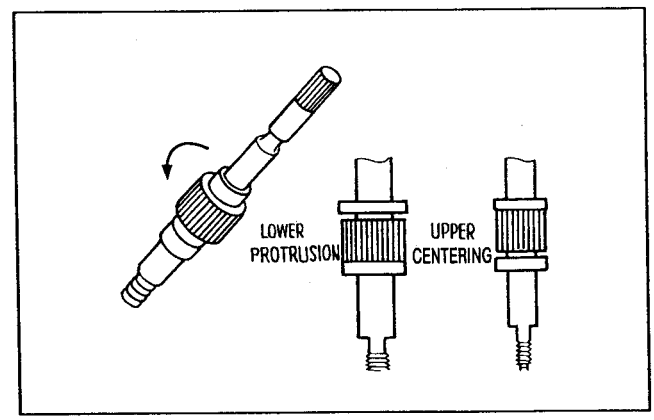

Fig. 15 Attachment Shaft

3) Set the head contact portion to the horizontal position.

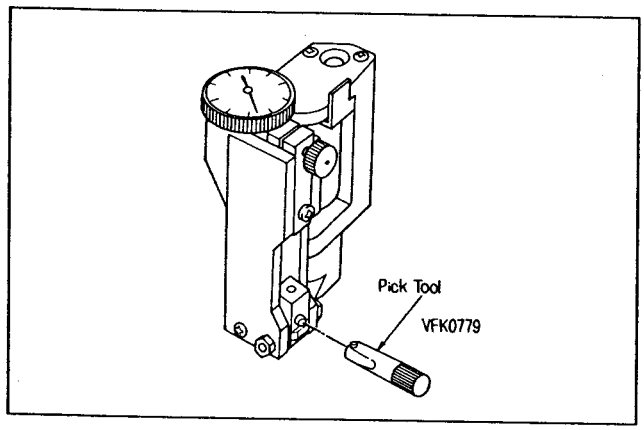

Fig. 16 Pick Tool

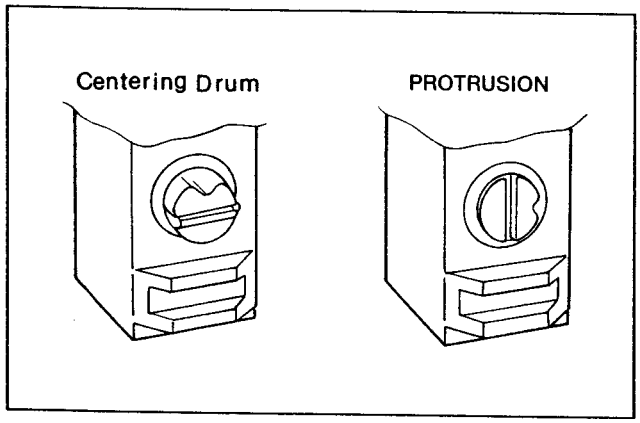

Fig. 17 Pick Tool

4) Install the attachment shaft at mechanism chassis.

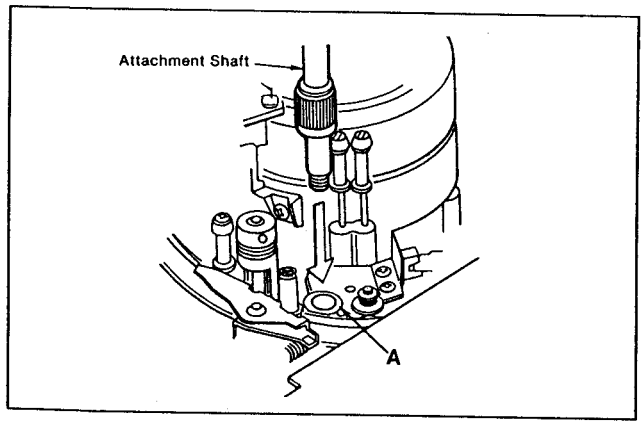

Fig. 18 Attachment Shaft

5) Set the main unit of the drum replacement tool at the attachment shaft.

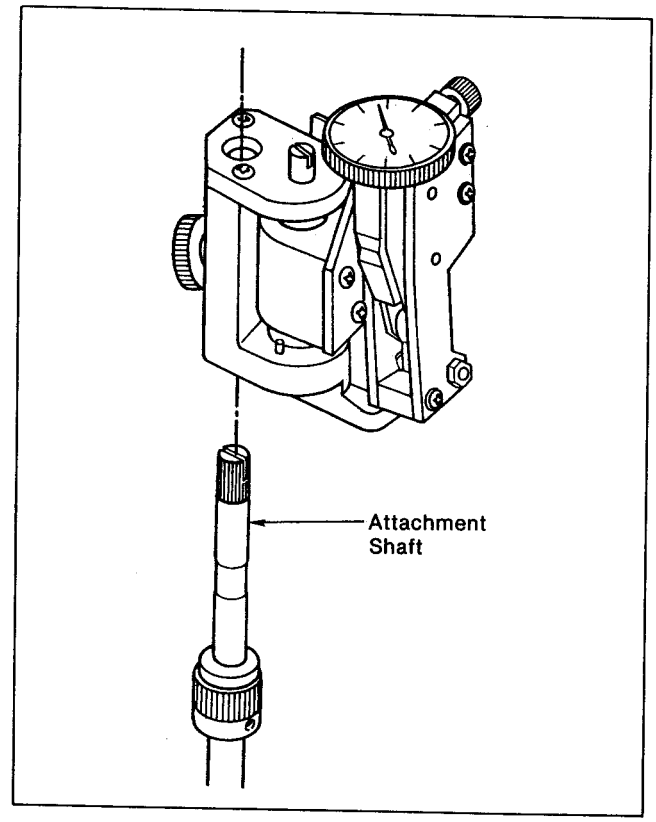

Fig. 19 Center Drum Replacement Tool

6) Confirm that the lever of center drum replacement tool is locked and install it to attachment shaft.

7) Set the attachment plate to touch the lower drum, and fix the knob by rotating the screw.

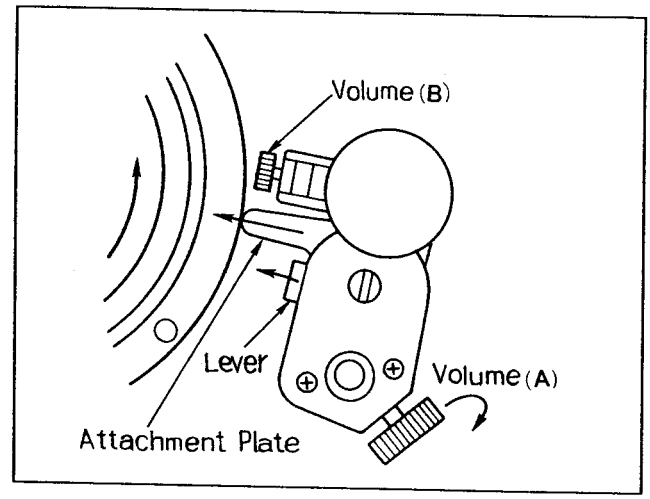

Fig. 20 Attachment Tool

8) Set the dial gauge to zero position.
Adjust the knob of the center drum replacement tool of the head adjustment place so that the pick up point touches the drum and increase to 60 um indication.

9) Rotate the outer ring of the dial gauge to set the meter indication to zero. Rotate the center drum if it is not concentric with its axis of rotation the meter will swing back and forth, indicating the amount of error. The maximum allowable tolerance is within +/- 1 um.

10) If it is out of specification, adjust the position of the middle drum by tapping lightly with the plastic handle of a screwdriver on the side of the drum apposite from the point of measurement. When the eccentricity is within +/- 1 um, gently tighten the 2 screws. Check eccentricity to make sure it is within specification. If it is out, repeat this procedure.

11) Tighten the 2 screws of the center drum securely with torque wrench and check eccentricity again. If it is within ± 1 um pull the drum replacement tool away from the drum.

12) Clean the block and upper drum of attachment surfaces (A,B and C portions) as shown in Figure 23. Remove the drum replacement tool and attachment shaft.

13) Reinstall the upper drum and tighten loosely the 2 hex screws of top of the arm and block using the torque wrench B.

14) Tighten loosely the hex screw which is located at the back of the block (screw E) using the torque wrench.
Confirm that there is a small allowance for upper drum morement.

15) Match the marking on arm and block and tighten the hex screw (E) which is located at back side of the lower drum by using the torque wrench A to 6kg. And tighten the 2 hex screws (D) of top of it by using the torque wrench to 8kg.

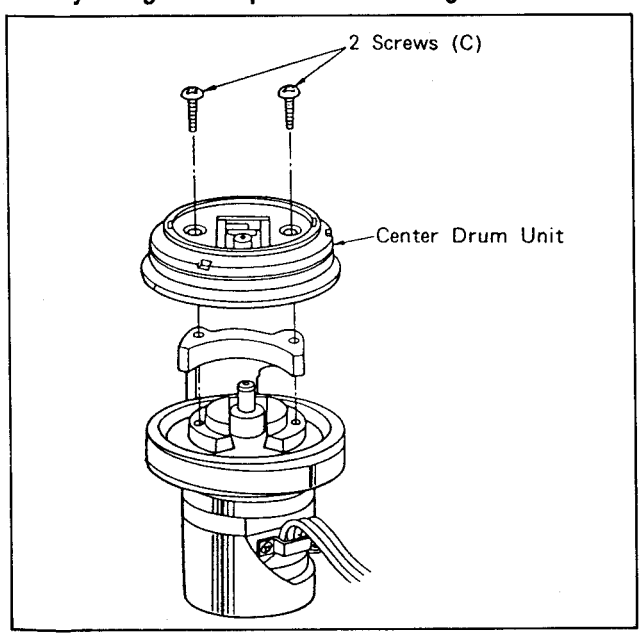

Fig. 21 Center Drum

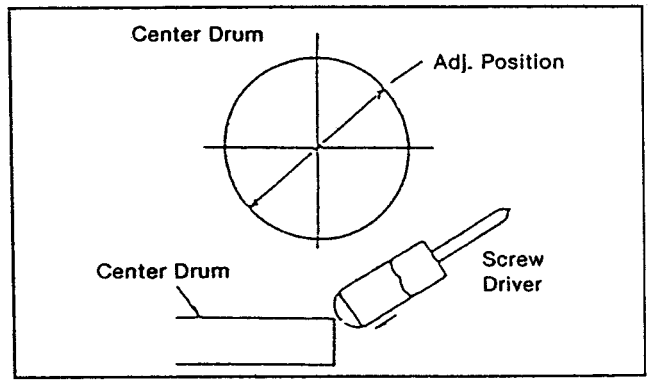

Fig. 22 Adjustment Position

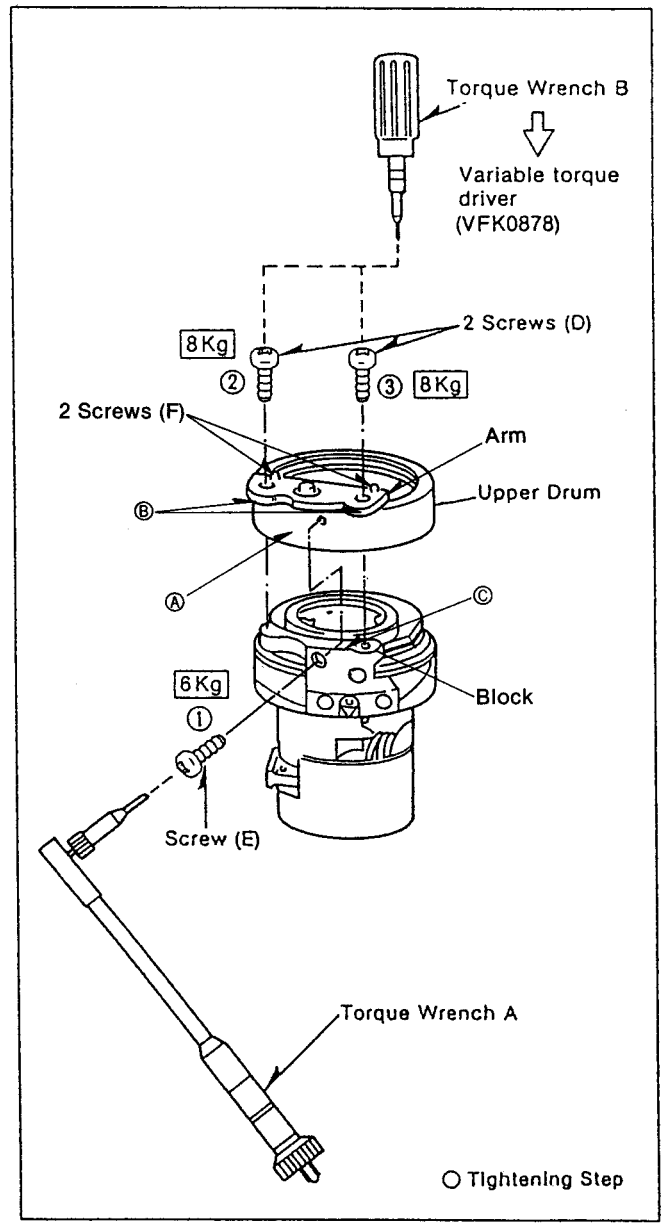

Fig. 23 Install Upper Drum

UPPER DRUM INSTALLATION and ADJUSTMENT

(1) Tighten the hex screw (E) matching the arm and block by using the torque wrench A to 6kg.
(2) Loosen the 2 screws (F) until release the spring washer, and match the screw (D) and screw (D)'s hole moving the upper drum to left and right by hand.
(3) Tighten the 2 screws (D) matching the arm and block by using the torque wrench to 8kg.
(4) Tighten the 2 screws (F) by using the torque wrench to 6kg.
(5) Erase the marking (A) by using the cleaning cloth.

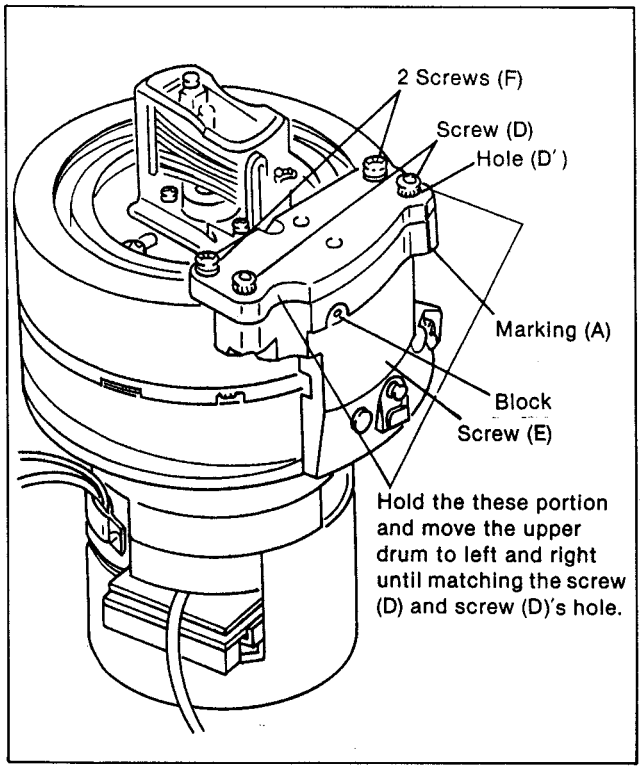

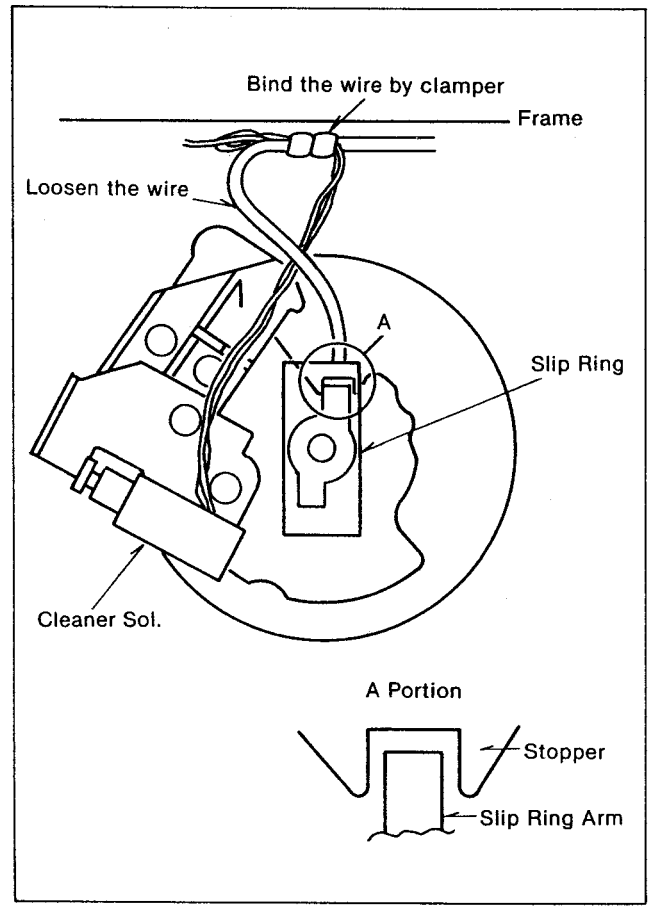

16) Reinstall the slip ring and tighten the 2 screws.

17) Reinstall the cleaner roller unit to the original position.
18) After install the slipring and cleaner roller, bind the wire using clamper as follows.

* Make loosen the wire when it is binded.

TAPE PASS LINEARITY ADJUSTMENT FLOW CHART

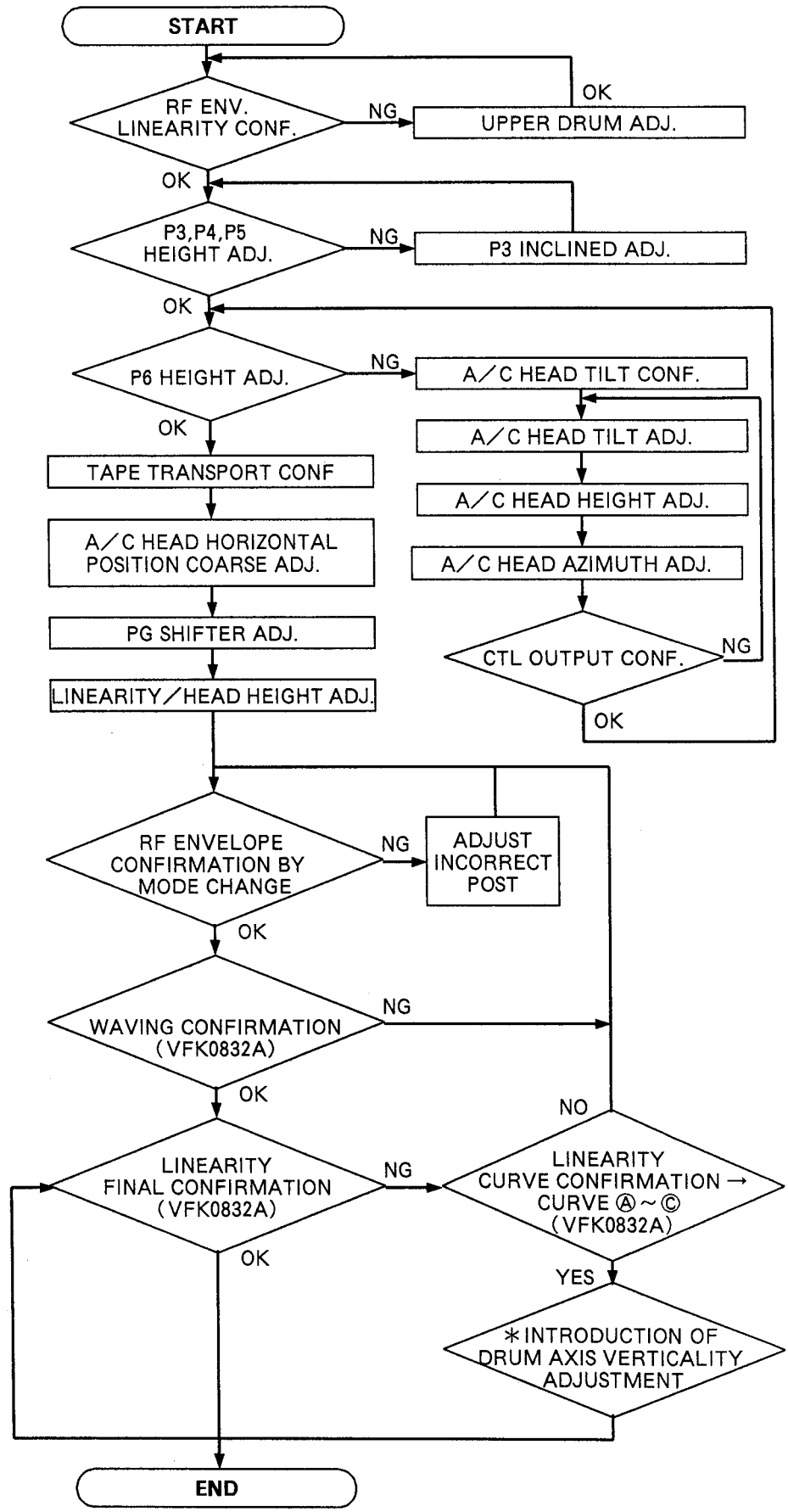

*If the specification is not satisfied after some adjustments, Drum unit may be wrong.

RF ENVELOPE LINEARITY CONFIRMATION

1. Confirm that the RF envelope is shown below.
2. In the VAR × -1 mode, confirm the diamond shape envelope as shown below.
3. If out of specification, adjust upper drum position, P3, P4, P5 of entrance posts height.

TEST	TP11 or TP12 (REC AMP BOARD), TP37 (H.SW)[D4](SERVO BOARD)	
SPEC	LINEAR MASTER PLAY	V1/Vmax, V2/Vmax, V3/Vmax ≥ 0.92
	SELF RECORDING PLAYBACK	V1/Vmax, V3/Vmax ≥ 0.9, V2/Vmax ≥ 0.95
	SELF RECORDING PLAYBACK	Modulation of Envelope is less than 5% at maximum envelope portion.
	SELF RECORDING VAR X-1	$\left(\frac{V1-V0}{Vmax}\right) \leq 0.2$
	SELF RECORDING VAR X1	V1/Vmax, V2/Vmax, V3/Vmax ≥ 0.92
	CONFIDENCE PLAYBACK	V1/Vmax, V2/Vmax, V3/Vmax ≥ 0.85
MODE	LINEAR MASTER PLAYBACK	
	SELF RECORDING PLAYBACK (COLOR BAR or MONOSCOPE)	
	ADJUST TRACKING VR and SET ENVELOPE IS MAXIMUM.	
TOOL	1. POST DRIVER 2. HEX. WRENCH M2.6	

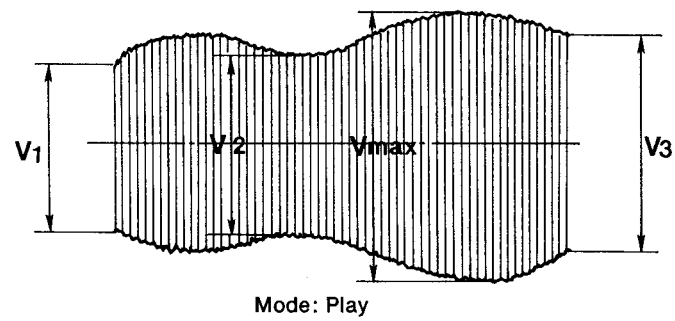

Mode: Play

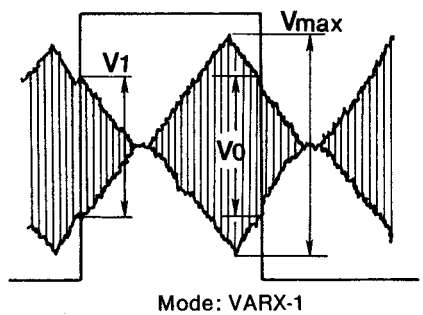

Mode: VARX-1

If out of specification, P3, P6 and Upper drum adjustment is required as follows.

V_1 : P3 post Height Adj.
V_2 : UPPER DRUM POSITION Adj.
V_3 : P6 post Height Adj.

$V_0 \fallingdotseq V_1$: P4 and P5 or Upper drum position Adj.

UPPER DRUM ADJUSTMENT

TEST	TP11, TP12 (REC AMP Board), TP37 [D4] (H SW) (SERVO Board)
MODE	Alignment Tape (2) LINEAR portion PLAY mode
SPEC	RF Envelope keeps flat when the tracking VR is adjusted

1. If out of specification, loosen the 2 screws (A) and (B) and push the (a), (b) and (c) portions to find the envelope flat portion.
2. Tighten the 2 screws (A) and (B) by 8kg torque using torque wrench (B) while holding the upper drum at best condition of output envelope.

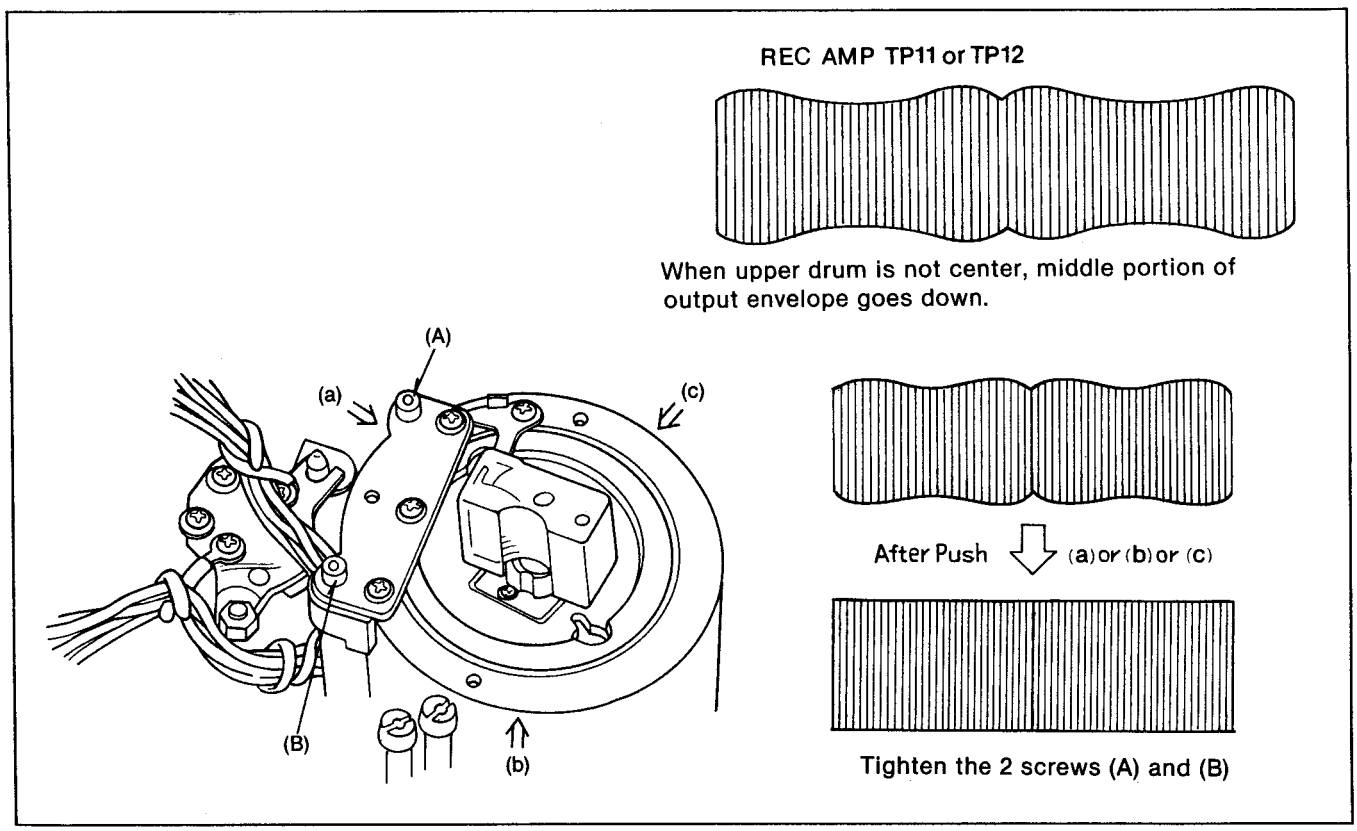

Note: As Envelope waveform is changed according to upper drum, P3, P4, P5, P6 and A/C Head, the envelope waveform is not flat only this adjustment.

P3 POST HEIGHT ADJUSTMENT

TEST	TP11, TP12 (REC AMP P.C.BOARD), TP37[D4](H.SW) (SERVO P.C.BOARD)
MODE	LINEAR MASTER TAPE, PLAY mode (confirmation) STOP mode (adjustment)
MACHINE CONDITION	Select the TEST MENU → Select the RF mode → Select the TRACKING mode → Set the VAR mode
SPEC	RF Envelope keeps flat when the tracking VR is adjusted
TOOL	POST DRIVER VFK0293, VFK0910, VFK0912, VFK0878 and VFK0955

1. If the tape curling occurs at the tape path, place the unit in the STOP mode to protect for tape damage and re-adjust the post height.
2. Set the adjustable torque driver (VFK0878) to 2.5Kg.
3. Set the P4 and P5 to no limit (Free) by using VFK0910, VFK0912, and VFK0878 (post driver with adjustable torque driver).
4. Adjust P3 post by using VFK0293.
5. Confirm that the RF envelope keep flat when the tracking VR is adjusted in PLAY mode.
6. Tighten the upper flange (with 2.5Kg torque) of P3 by using torque driver and VFK0955.
7. After adjustment of P3 post, set the P4 and P5 to original limit. Be sure that there is no curl on the tape.
8. If out of specification yet check the P3 post Inclined angle adjustment.

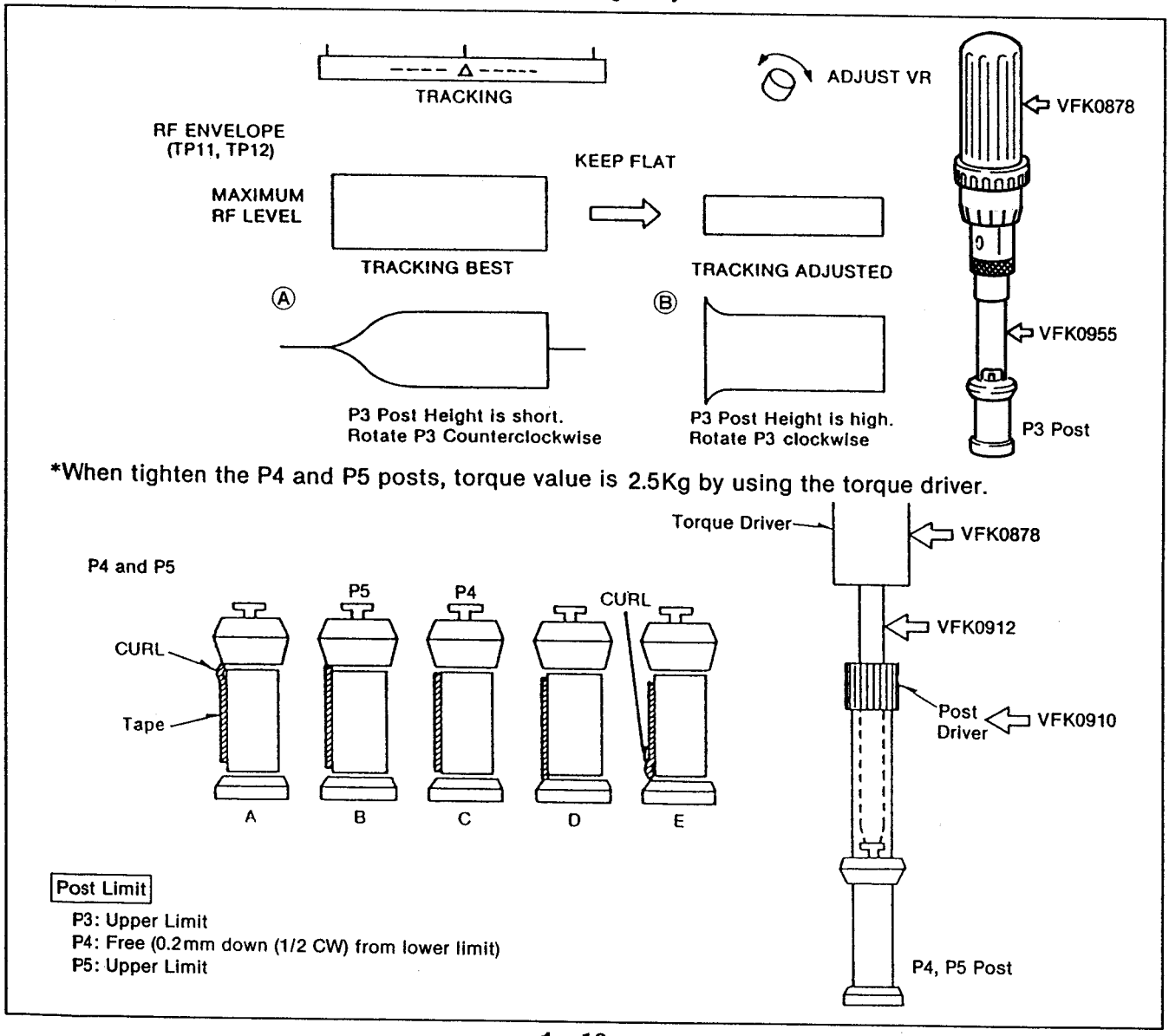

Post Limit

P3: Upper Limit
P4: Free (0.2mm down (1/2 CW) from lower limit)
P5: Upper Limit

CONFIRMATION OF P3 POST INCLINED ANGLE

In order to check the P3 tilt, Perform the following checks

Check 1 :

Play back the pre-recorded tape and place the unit in the FWD and REV mode.
(FWD/REV as capstan on condition)
Confirm that the P3 post is upper limit and no tape deforming during these mode.
If it is not, adjust the P3 post tilt using the tilt fixture.

Check 2 :

Place the unit in the PLAY mode.
Gently press down on the upper edge of the tape as shown in figure.
Displace the tape as necessary to achieve the (B) waveform as shown in figure.
Then release the tape. The envelope will change from (B) to (C) and back to (A).
If the P3 post is properly adjusted, it will take from 1 to 2 seconds to change from (B) to (C) to (A).

If there is not enough tilt to the P3 post, it will take more than 2 seconds for the envelope to change from (B) to (C) to (A). If in this case, readjust the P3 post using the tilt fixture.

If the P3 post has too much tilt, it will take less than 1 second for the envelope to change from (B) to (C) to (A). Adjust the P3 post tilt using the tilt fixture to achieve a setting time of 1 to 2 seconds.

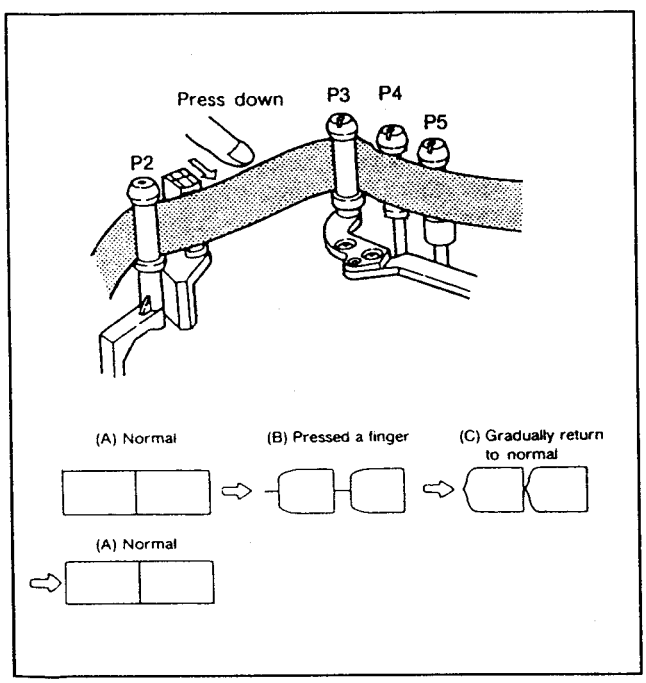

P3 Post inclined angle adjustment (Factory Adjustment only)

SPEC	X direction 33μm (16.11' ± 5') Y direction 51μm ± 10μm (24.90' ± 5')
MODE	P3 Stopper touch condition (Manual sub-loading)
TOOL	Mech. Neutral Plate with P3 stopper Micro Meter and Pick up (7mm pitch), Pick up Fixture Micro Meter calibration block

1. Turn the power off.
2. Remove the cassette compartment with the connector.
3. Turn the power ON and set the VTR into NO TAPE M CASSETTE mode.

   TEST → F4 (MECHA)→ F1 (NO TAPE)
   Confirm F3 (C SIZE) is M → STOP

4. Set the neutral plate with P3 stopper on the reel base.
5. Set the Micro Meter pick up to the pick up fixture with M3 screw.
6. Calibrate the Micro meter pick up reference position with the calibration block. (Refer to setting of Micro Meter)
7. Rotate the sub-loading motor until the P3 post (tension post) just touched with the P3 stopper.
8. Set the Micro Meter pick up to the guide (X direction) and (Y direction) and measure the angle.
9. If the angle of X and Y direction are not within specification adjust screw a and b so that the angle of X and Y direction are within specification.
10. Glue the screw a and b.

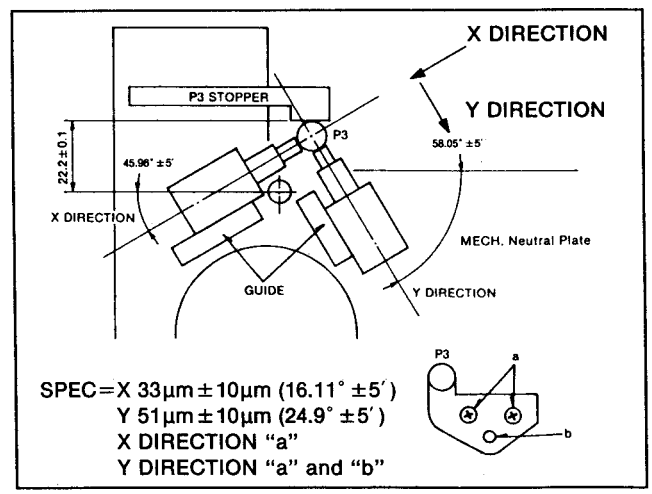

P4, P5 POST HEIGHT ADJUSTMENT

	LIMIT (PLAY mode)	TAPE HEIGHT					ADJUSTMENT
		A	B	C	D	E	
P4 POST	Free			O			Adjust P4 post to free.
P5 POST	Upper Limit		O				Just press upper limit without Tape curl.

TAPE	TP11, TP12 (REC AMP BOARD), TP37 (H.SW)(SERVO BOARD)
SPEC	Output envelope is flat
MODE	LINIEAR MASTER PLAY (P4, P5 Post)
TOOL	Post Driver (VFK0878, VFK0912 and VFK0910) Check Mirror

1) Set the VTR to VAR x-1 and VAR x 3 alternately and confirm that the tape curling at lower and upper flange on the P2 and P3 post are not appeared.
2) Set the VTR to FF and REW mode alternately and confirm that the tape curling at lower and upper flange on the P2 and P3 post are not appeared.
3) If appear the tape curling, adjust the P5 post height so that the tape curling is disappeared on the each modes (VAR x-1 to VAR x 3 / FF and REW).

* When tighten the each posts, torque value is 2.5Kg by using the torque driver.

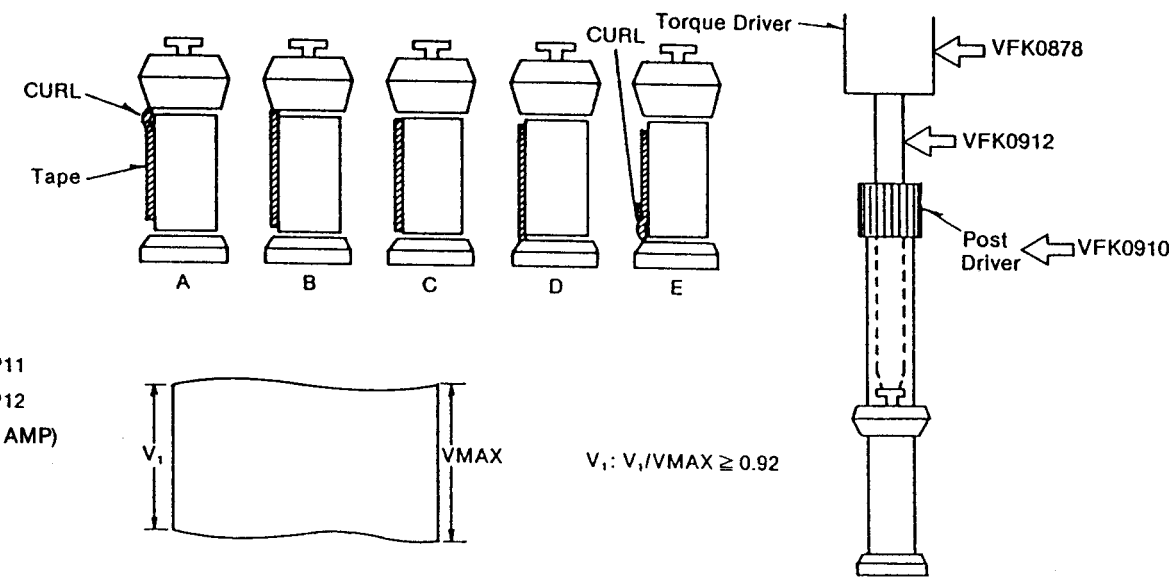

P6 POST HEIGHT ADJUSTMENT

TEST	TP11, TP12 (REC AMP P.C.BOARD), TP37[D4](H.SW) (SERVO P.C.BOARD)
MODE	Alignment tape (2) LINEAR portion, PLAY mode (confirmation) STOP mode (adjustment)
MACHINE CONDITION	Select the TEST MENU → Select the RF mode → Select the TRACKING mode → Set the VAR mode
SPEC	RF Envelope keeps flat when the tracking VR is adjusted
TOOL	POST DRIVER (VFK0293) → VFK0910, VFK0912 and VFK0878

1. Set the variable torque driver to 2.5Kg.
2. Adjust P6 post by using VFK0910, VFK0912 and VFK0878 (post driver with adjustable torque driver).

Note: If it is out of specification, confirm the A/C Head tilt adjustment.

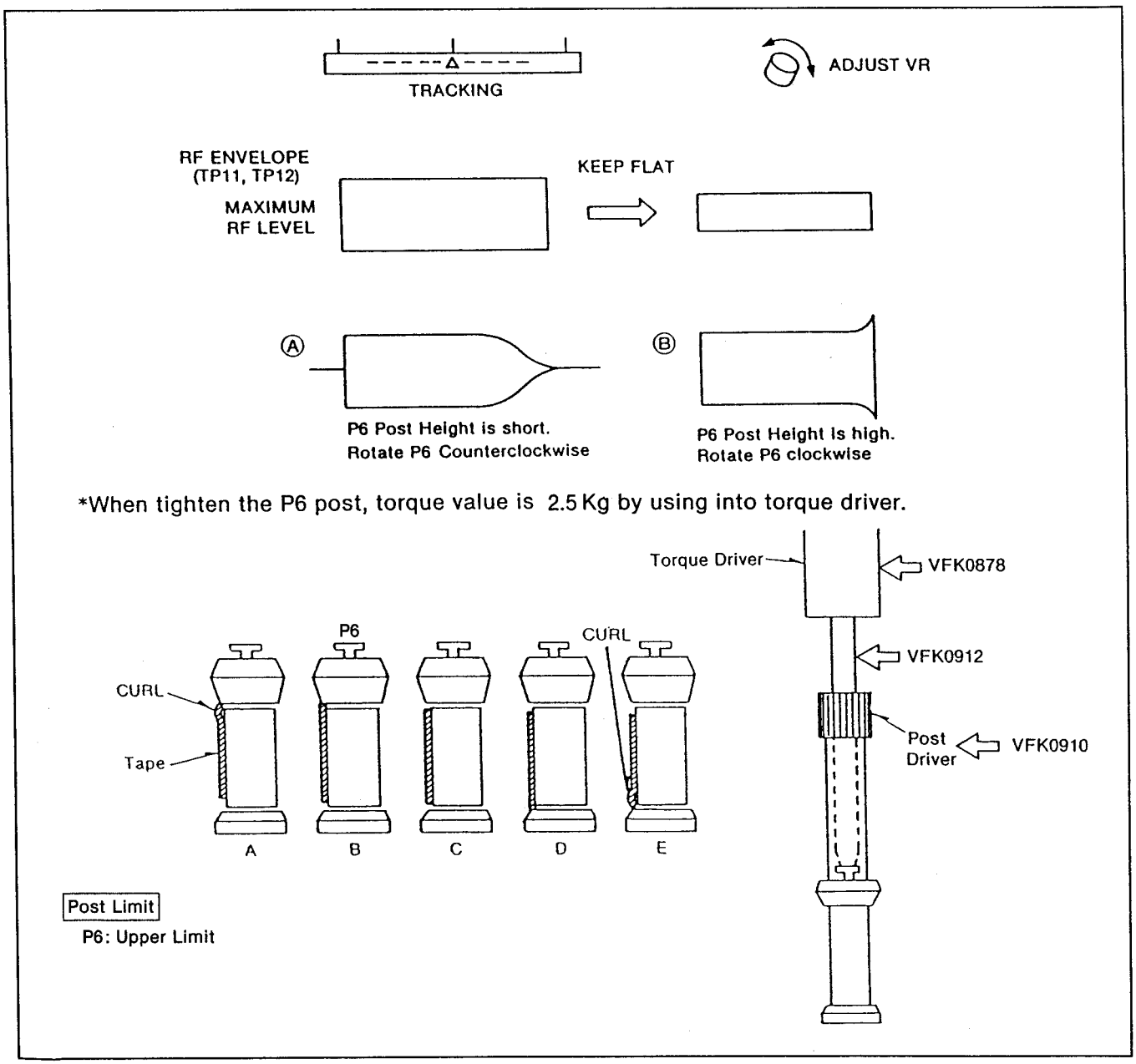

A/C HEAD TILT CONFIRMATION

Before adjust A/C Head Tilt, please confirm A/C Head tilt using tilt tool. This Tool is for coarse check of A/C Head tilt, therefore final confirmation is necessary checking with cue audio level, CTL pulse level and RF envelope.

Tool List: A/C Head Tilt Tool (VFK1008)
Calibration Plate (1)(VFK1007)
Calibration Plate (2)(VFK1006)

1. CALIBRATION PROCEDURE

1) Attach the calibration Plate (1) to the A/C Head Tilt Tool as shown below.
J and L, K and M should touch each other.

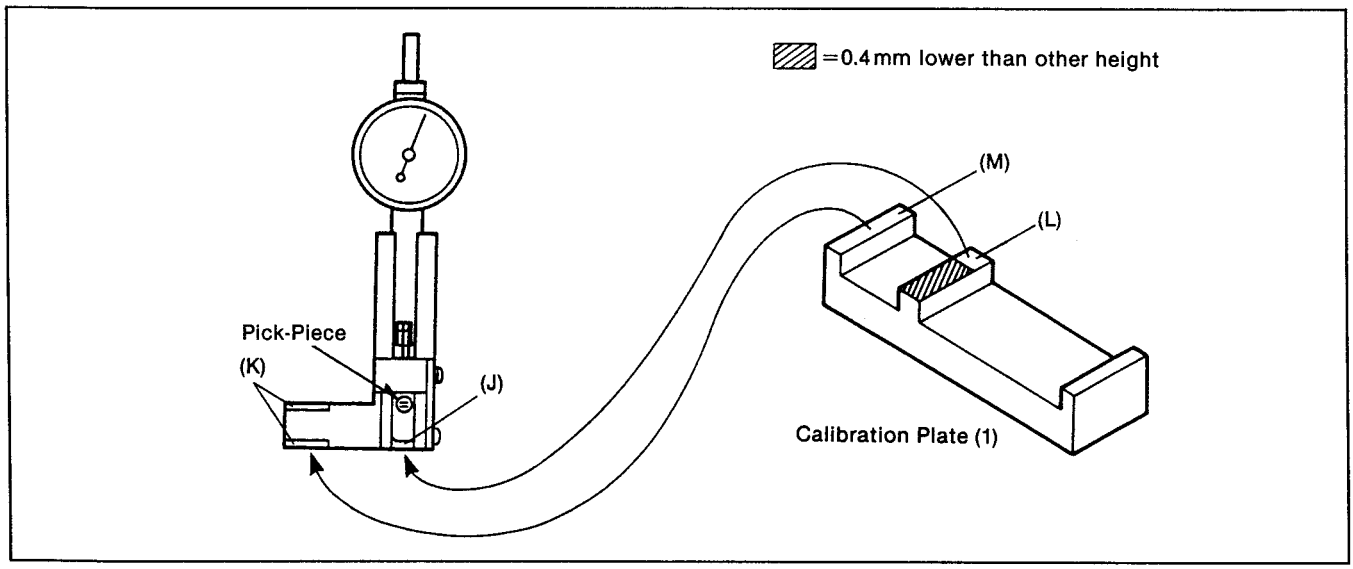

2) Gently press the Pick Piece of A/C Head Tilt Tool from rear side so that the pick piece is protruded from reference surface about 0.4mm with calibration plate (1) as shown below.

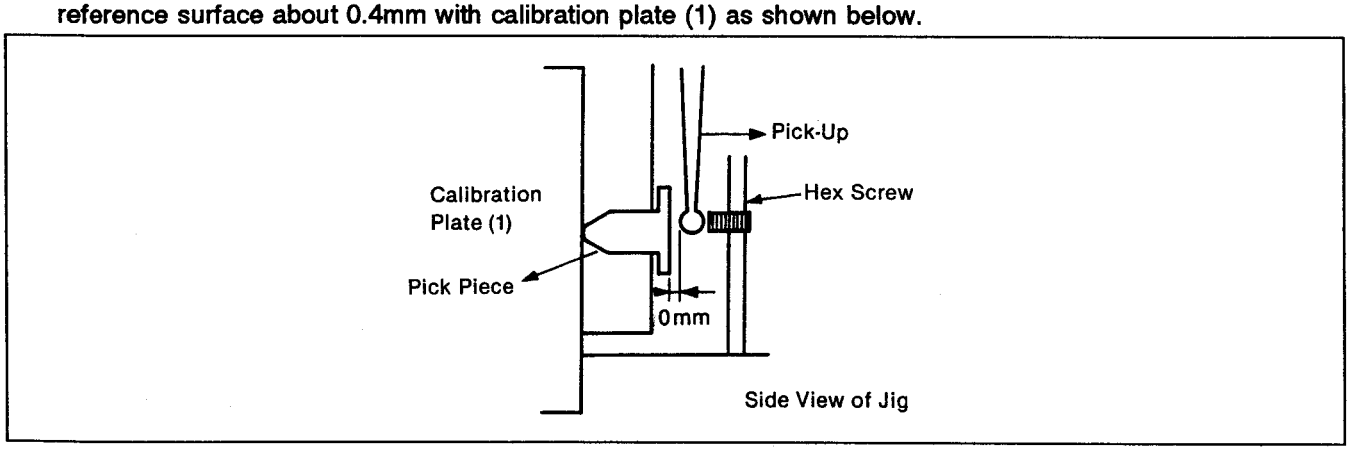

3) Turn the Hex screw clockwise so that the Pick-up touches the Pick-piece slightly. Then turn the Hex screw two turn counterclockwise.

4) Attach calibration plate (2) to the A/C Head Tilt Tool as shown below.
J and N, K and O should touch.

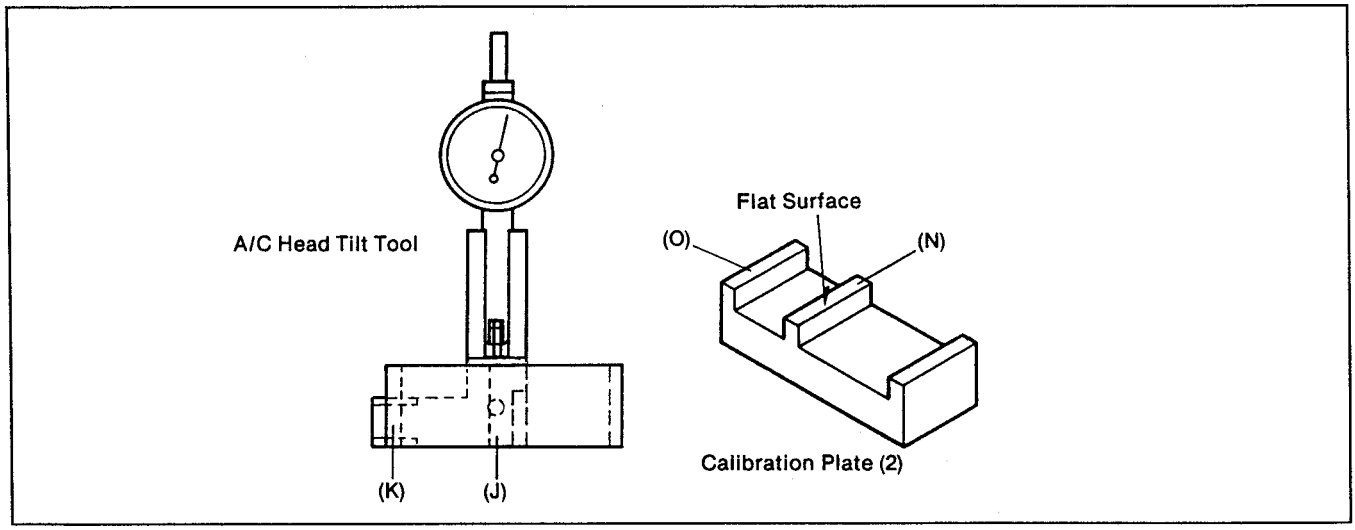

5) Hold (K) portion and gently press at (J) to set the dial gauge reading to "0".
6) Remove the Calibration Plate (2) and confirm that the gauge reading is -300μ ~ -500μ with no pressure.
7) If it is not, repeat step 1) ~ 5) until gauge reading is -300μ ~ -500μ.

2. MEASURING PROCEDURE

1) Gently install the A/C head Tilt Tool onto the P6 Post.

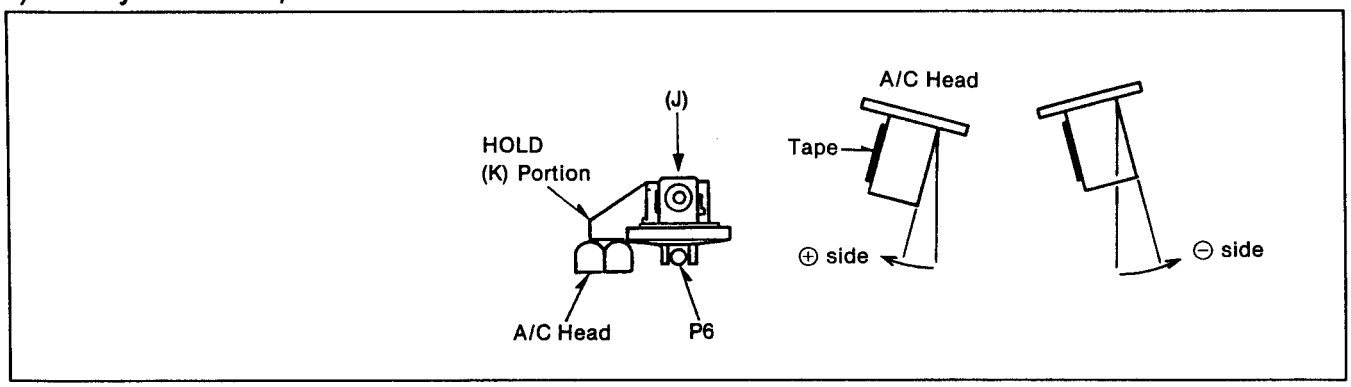

2) Hold (K) portion as reference and getly press (J) portion to measure tilt reading.
3) Confirm that the gauge reading is 0 ~ -50μm.
4) If it is not refer to the following A/C Head Adjustment Procedure.

A/C HEAD TILT ADJUSTMENT

SPEC	A/Amax ≥ 0.95 $V_1/V \geq 0.95$
MODE	Alignment Tape (2) Linear portion, Cue 15KHz Portion
TEST	TP20 (CTL pulse) Servo Board, TP11 on Rec Amp Board, CUE OUT (Rear)
ADJUST	HEX screw A

<STEP 1>

1. Playback the alignment tape linear portion and confirm the RF envelope at TP11.
2. Confirm that the RF envelope has no droop or waving on exit side.
3. If doop or waving occur, adjust hex screw A or P6 post height.

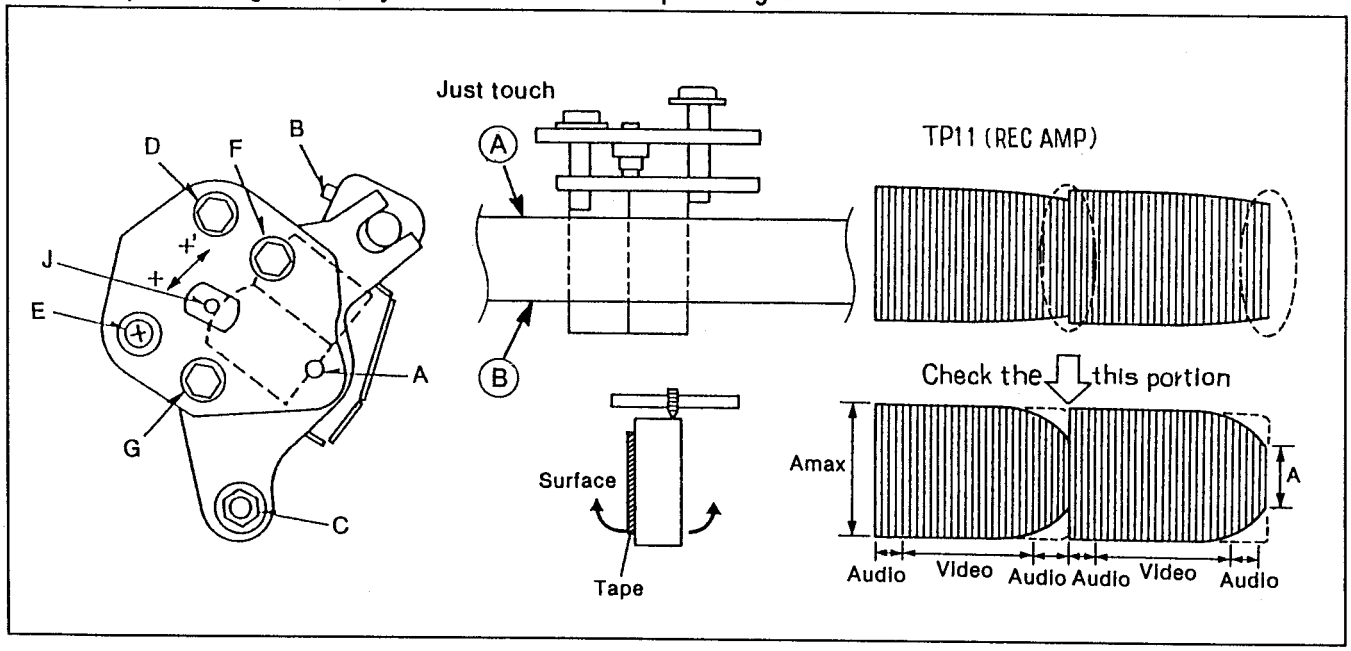

<STEP 2>

1. Playback the cue 15KHz portion and verify the audio level.
2. Tap the supply tension arm and confirm that the audio level and CTL level are maximum.
3. If not, readjust hex screw A.

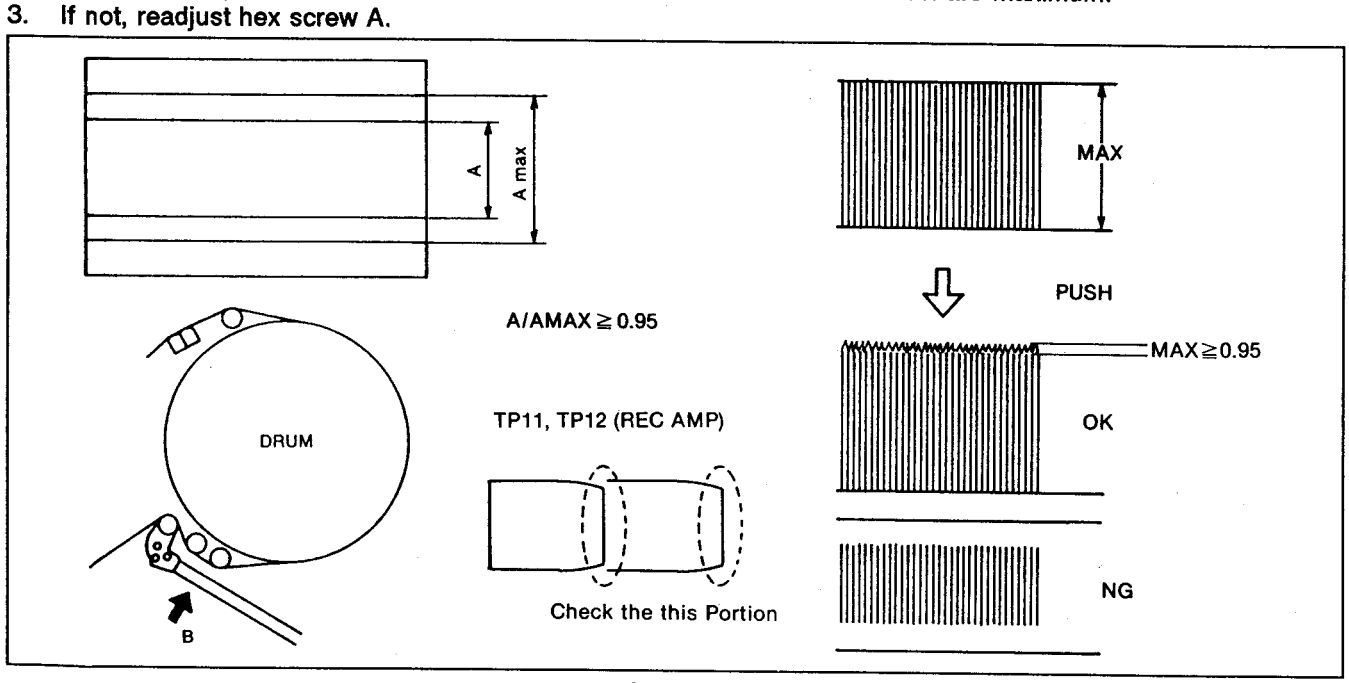

<STEP 3> Height Confirmation

1. Playback the Linear portion and confirm the CTL level.
2. Gently press the A and B portion of the tape.
3. If CTL level will be increased, loosen the hex screw B and readjust the nut C.

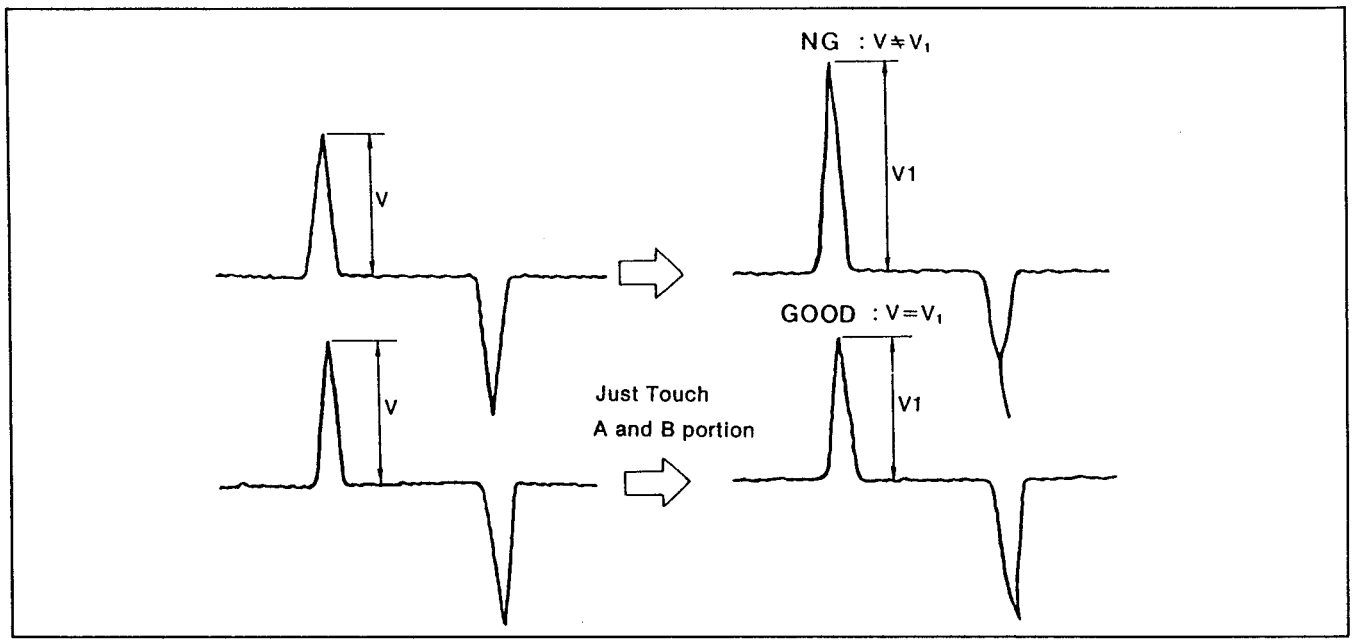

A/C HEAD HEIGHT ADJUSTMENT

SPEC	CTL Output Level is maximum
MODE	Alignment Tape No.2 15KHz Portion
TEST	TP20 on S5 (SERVO) Board
	CUE Audio Output
CONFIRM	Press tape H and I direction and confirm the audio level is decreased
TOOL	HEX Wrench M3, NUT DRIVER M4
M.EQ	Oscilloscope

<Step 1>

1. Connect scope CH1 : TP20 on S5 (SERVO) Board
   CH2 : Cue Audio Output
2. Loosen screw "B" slightly.
3. Press tape gently "H" and "I" direction.
4. If the CH1 (CTL) level increase "H" direction, rotate screw "C" counterclockwise.
5. If the CH1 (CTL) level increase "I" direction, rotate screw "C" clockwise.
6. Confirm the CUE Audio level using same procedure of CTL level.
7. Tighten screw "B".

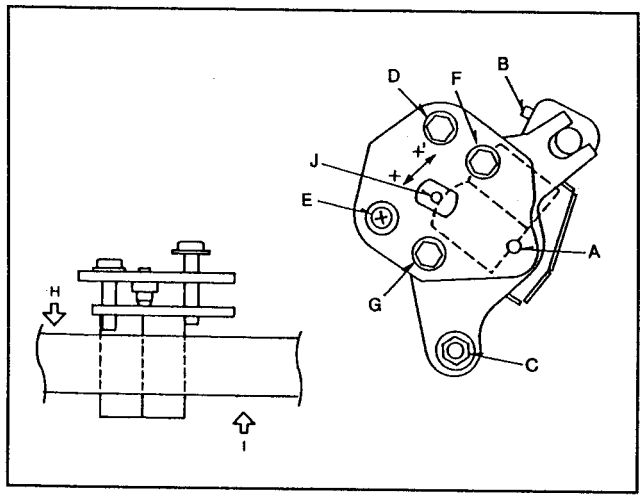

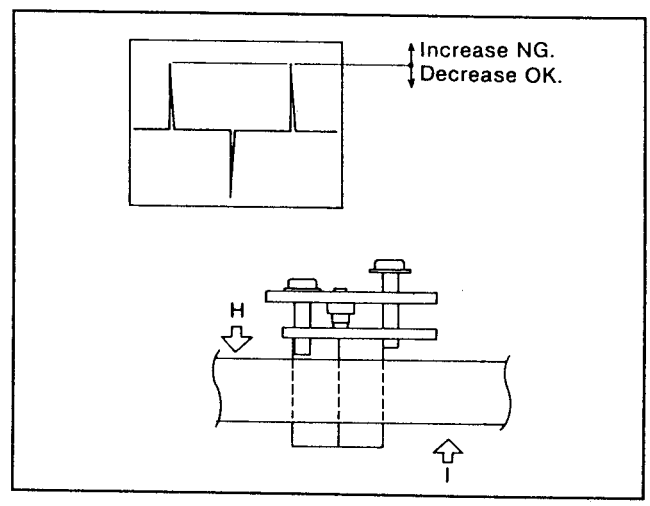

A/C HEAD AZIMUTH ADJUSTMENT

SPEC	Cue Audio Output is maximum
MODE	Alignment Tape No.2 15KHz Portion
TEST	Cue Audio Output
ADJUST	SCREW "D", SCREW "E"

<STEP 1>

1. Connect scope to Cue audio output.
2. Loosen Screw "E" about 1/4 turn ccw.
3. Playback the Alignment tape No.2 15KHz portion.
4. Adjust the screw "D" so that the Cue audio level is maximum.
5. Tighten the 2 screws "E" and "D" alternately keeping the cue audio level is maximum and finally tighten up the screw "E" to 4Kg by using the torque driver.

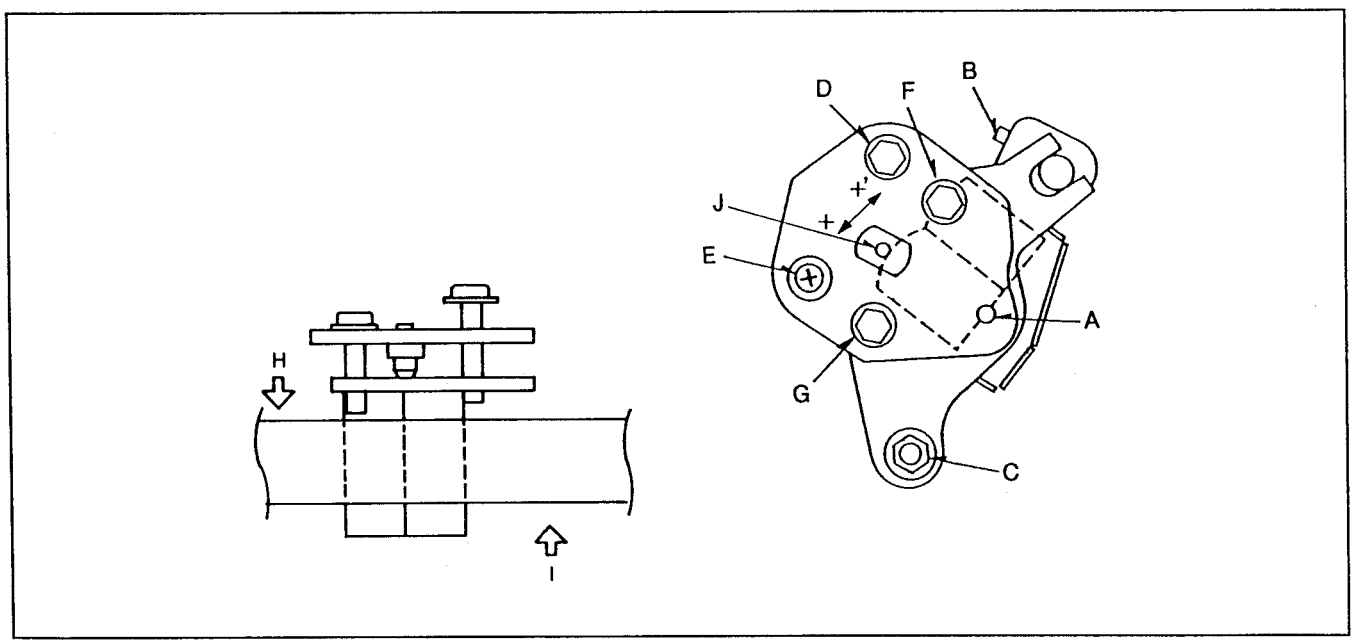

CTL OUTPUT CONFIRMATION

SPEC	$V_1 \geq 5$ [V] $V_2 \geq 5$ [V]
MODE	Alignment Tape (2) Linear portion, Cue 15KHz Portion
TEST	TP20 (CTL pulse) Servo Board

<STEP 1>

1. Confirm the CTL pulse level is more than 5V.
2. If it is not, readjust A/C Head Tilt, Height and Azimuth.

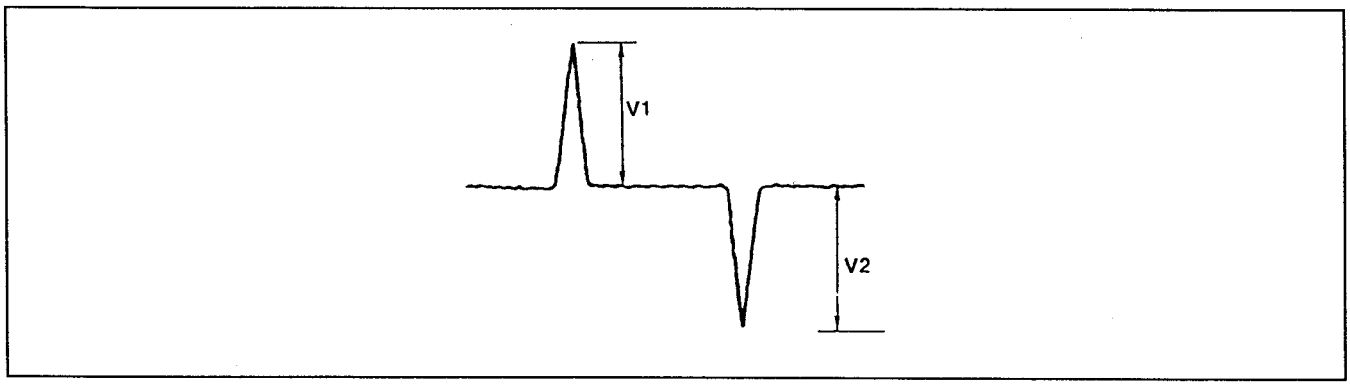

TAPE TRANSPORT POSTS LIMIT POSITION TABLE

Name	Limit	Adjustment
P1 Post	Free	Set Free Position (Torque 2.5kg)
P2 Post	Lower Limit	Lower Limit or Free during PLAY mode (Torque 2.5Kg)
P3 Post	Upper Limit	Confirm the Entrance side Envelope is flat (Torque 2.5Kg)
P4 Post	Free	Set the flange 1/2 CW from lower limit (Torque 2.5Kg)
P5 Post	Upper Limit	Upper Limit during PLAY mode (Torque 2.5Kg)
P6 Post	Upper Limit	Confirm EXIT side Envelope is flat (Torque 2.5Kg)
P7 Post	Lower Limit	Lower Limit during PLAY mode (Torque 2.5Kg)
P8 Post	Upper Limit	Upper Limit during ALL mode (Torque 2.5Kg)
P9 Post	Free	Free in PLAY, REV mode --- Lower Limit (Torque 2.5Kg)
P10 Post	Free	Free or Lower Limit during PLAY and REV (Torque 2.5Kg)
P11 Post	Free	Free or Lower Limit during PLAY and REV (Torque 2.5Kg)
P12 Post	Free	Set Free Position (Torque 2.5Kg)

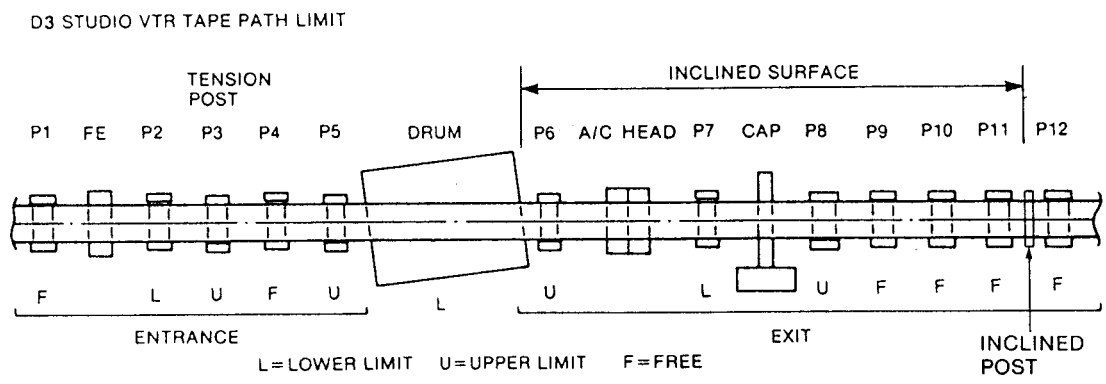

Tape Transport

TAPE TRANSPORT CONFIRMATION

<STEP 1>

1. Play back the work tape.
2. Confirm the all post limit as shown above and confirm that there is no tape damage at each posts during playback.

<STEP 2>

1. Confirm that the P8 post is upper limit during playback.
2. Set the VTR VAR × -1 mode.
3. Confirm that there is no tape damage at P7 lower flange portion.
4. If there is the tape damage, adjust the P9 flange so that the tape damage at P7 post lower flange portion does not occur.
5. Confirm that there is no tape damage at P9 post flange portion.

<STEP 3>

1. Set the VTR VAR × -1 ~ VAR × 3 alternately.
2. Confirm that there is no tape damage at P9, P10, P11 lower flange portion.
3. If there is the tape damage, adjust P10, P11 post flange so that the tape damage at P9, P10, P11 does not occur.

P7, P8, P9, P10 AND P11 POST HEIGHT ADJUSTMENT

	LIMIT (PLAY mode)	TAPE HEIGHT					ADJUSTMENT
		A	B	C	D	E	
P7 POST	Lower Limit				O		Just press lower limit without Tape curl.
P8 POST	Upper Limit		O				Just touch upper flange.
P9 POST	Free (or Upper Limit or Lower Limit)		O	O	O		Set SHTL ×-1. Adjust P9 post so that the tape curl does not appear at P7 lower flange.
P10,P11 POST	Free (or Upper Limit or Lower Limit)		O	O	O		Alternately set SHTL ×3 and ×-1, adjust P10 and P11 so that the tape curl will not appear P9, P10, P11 posts.

TAPE	Self Recording Tape
MODE	Play, SHTL mode
TOOL	POST DRIVER, CHECK MIRROR

* When tighten the each posts, torque value is 2.5Kg by using the torque driver.

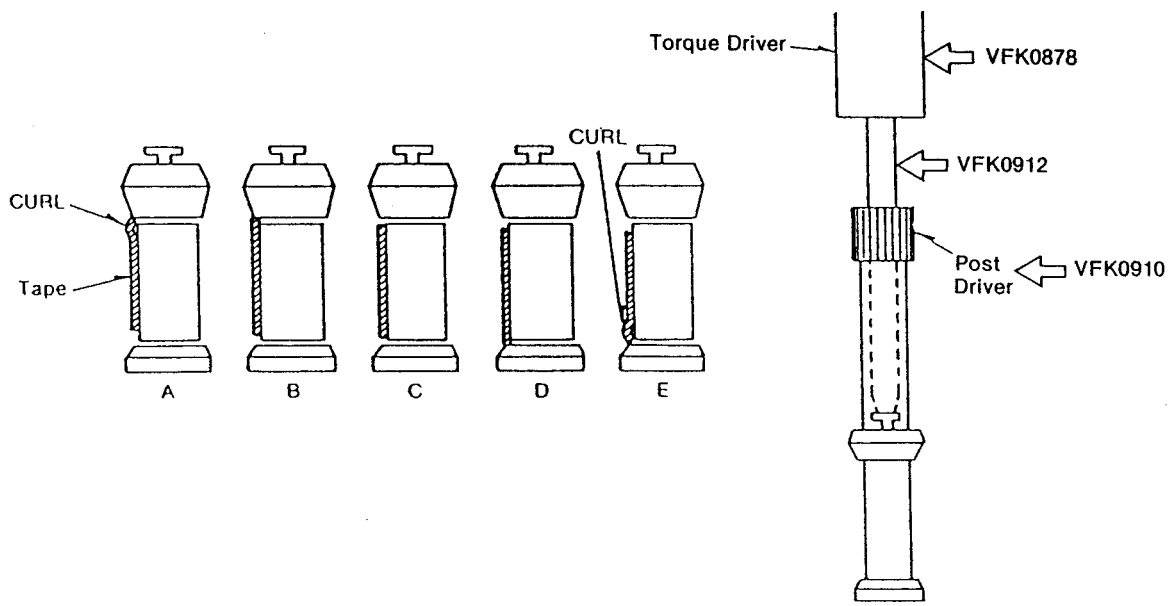

A/C HEAD HORIZONTAL POSITION COARSE ADJUSTMENT

SPEC	RF Envelope, Head SW and CTL relationship is shown in Fig.
	V2/Vmax ≥ 0.95
TAPE	A/C Head Horizontal Position Master Tape
	Alignment No.2 Linear Portion
MODE	PLAY mode, Tracking VR Fix
TEST	REC AMP TP11 or TP12 (RF)
	S5 SERVO TP20 (CTL) [H1], TP49 (HEAD SW)
ADJ.	A/C Head Screw "F" and "G" (Torque 5Kg), Hole "J"
TOOL	Eccentric Driver (ø2) VFK0358, VFK0878 and VFK0920

* Set the variable torque driver (VFK0878) to 5Kg and tighten 2 screws (F) and (G).

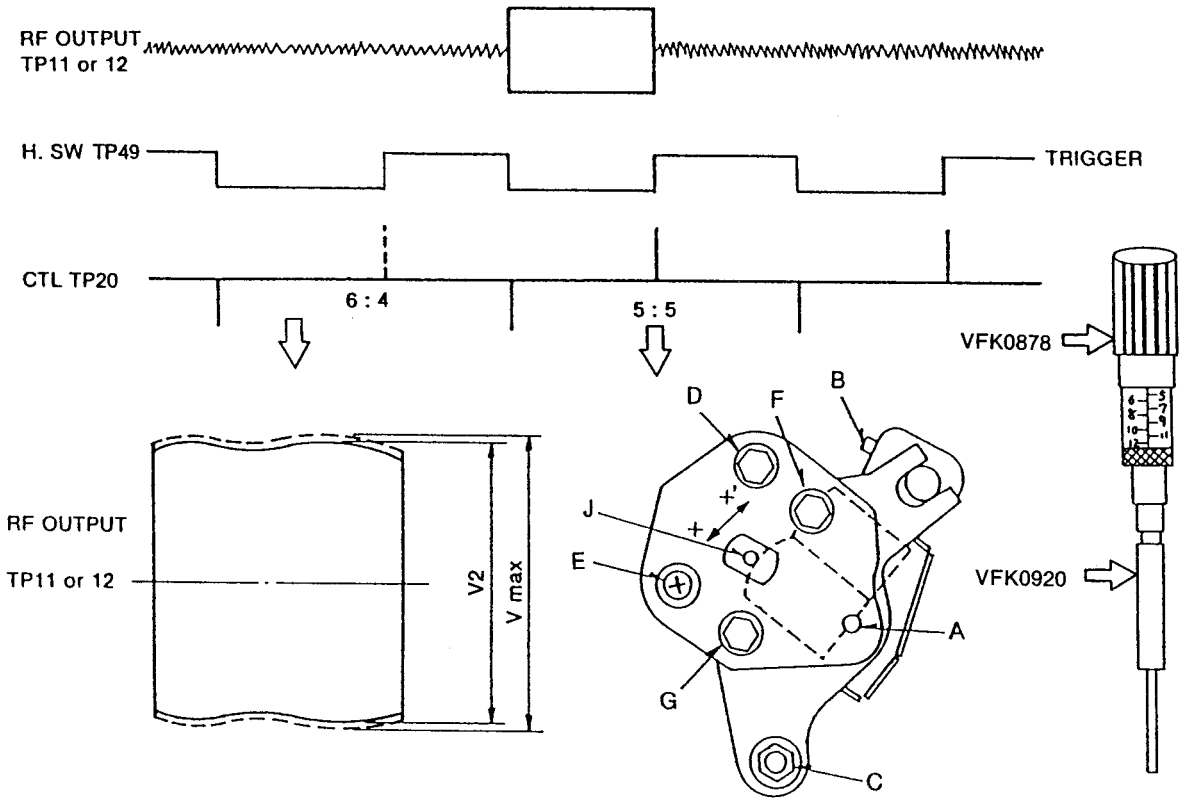

PG SHIFTER ADJUSTMENT (S5:SERVO)

SPEC	PAL:25.5±0.5μsec, NTSC:27.0±0.5μsec
TEST	TP11 (REC AMP) TP37 (SERVO)
MODE	PLAY
TAPE	75% COLOR BAR PORTION ALIGNMENT TAPE
M.EQ	OSCILLOSCOPE
INPUT	
ADJ.	SW2[F2], SW3

<STEP 1>
MENU CONDITION

TEST MENU

Select the TRACKING FIX/VAR F10 to "FIX".

<STEP 2>
1. SCOPE CH1 : TP11 (REC AMP)
   SCOPE CH2 : TP37 (SERVO)
2. SCOPE TRIGGER : CH2
3. Adjust SW2, 3 and 4 so that the period T is as shown in Figure.

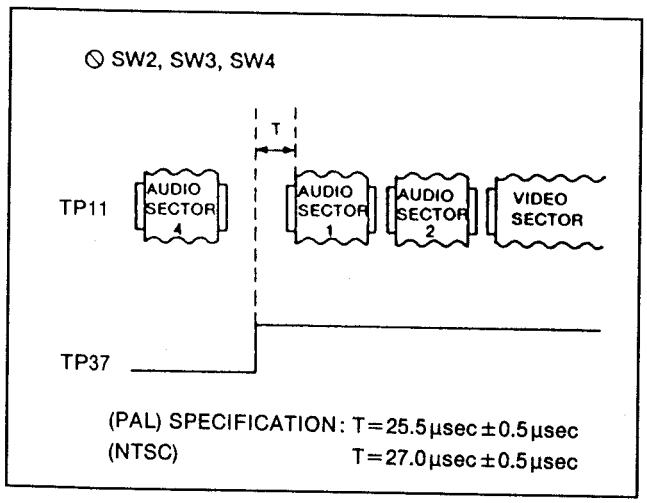

SW2: Fine adjustment
SW3: Pre fine adjustment
SW4: Coarse adjustment

HEAD ADJUSTMENT TOOL CABLE CONNECTION WITH AJ-D350

(Software Ver. 6.2)

① To REC AMP TP207
② To S6 P211-22A
③ To CPU A/D
④ To REC HEAD AMP (Box) From Drum
⑤ To CN85 on the HEAD AMP (Box)
⑥ To CN86 on the HEAD AMP (Box)

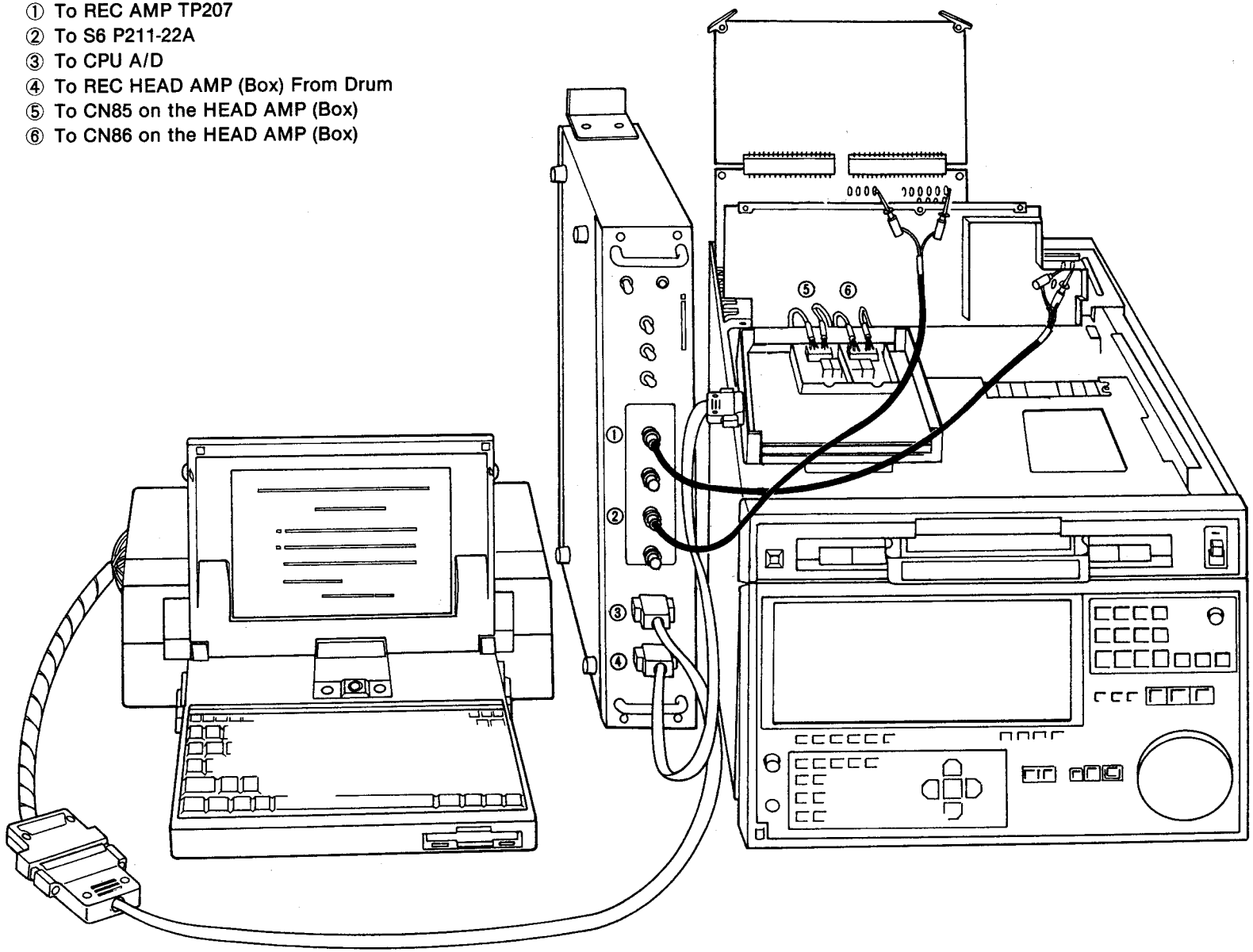

D3 Linearity/Head Height Adjustment Tool with Software Ver.6.2

The Linearity/Head Height Adjustment Tool is used to adjust the D3, D5 VTR tape straightness linearity, recording head height and flying erase head height adjustment.
The function of the linearity and head height adjustment is changed by a manual switch on the tool and recording head height and flying erase head adjustment is automatically selected by a computer.
This tool power supply circuit is selectable 100 to 120 V or 220 to 240 V. This tool also can use for NTSC and PAL MODEL adjustment by selecting a manual switch.
For this adjustment A/D converter and IBM PC AT is necessary, they are also selectable by a manual switch.

SECTION 1 SETUP

1. CONTENTS OF TOOL SET

This tool is supplied as following set.
Please confirm all the items are packed completely.

1. Main unit
2. Head amplifier board unit
3. Head amplifier connection cable
4. A/D converter connection cable
5. A/C power cable
6. 4 BNC-PIN cables
7. Adaptor cable for AJ-D340.

*Software in 3.5" floppy disk will be sent separately.

FILE CONSTRUCTION
(1) File required to start
Either E.Q.N is put into □
E:For PC-AT ELMEC A/D
Q:For PC-AT QUATECH A/D
N:For PC-98
1) Programm File

*□62MENU	.EXE	Selection MENU
*□62LIN	.EXE	Linearity Measurement (AJ-D350/D320/D340/D580)
*□62RECD3	.EXE	REC Head Height Measurement (AJ-D350/D310/D320/D340)
*□62RECD5	.EXE	REC Head Height Measurement (AJ-D580)
*□62FE	.EXE	FE Head Height Measurement (AJ-D350/D580)

2) Data File

*□62MODE .DAT	Each programm start assistance (Measurement Mode/Model Distinguish)
*□62TAPE2 .DAT	No.2 Alignment Tape Data
*□62TAPE3 .DAT	No.3 Alignment Tape Data
*□62TAPE4 .DAT	D5 Head Height Measurement Tape Data

3) Instruction File

*□62D350	.IST	Connection and Setting Instruction for AJ-D350
*□62D310	.IST	Connection and Setting Instruction for AJ-D310/320
*□62D340	.IST	Connection and Setting Instruction for AJ-D340
*□62D580	.IST	Connection and Setting Instruction for AJ--D580

When use the ELMEC A/D Board ...
Please confirm the IRQ port assignment of your personnel computer before intall the software. IRQ 10 to be used for this tool so if IRQ 10 of your PC is already used, A/D board modification and config. sys file change will be needed.

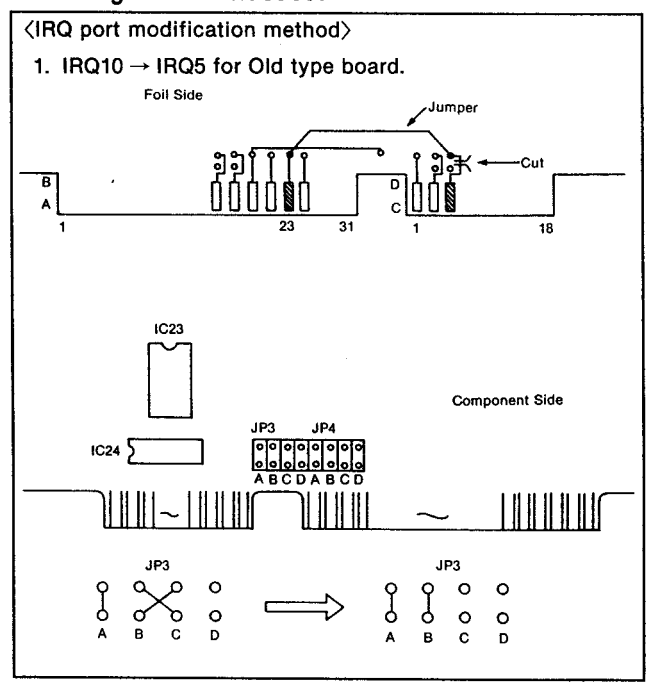

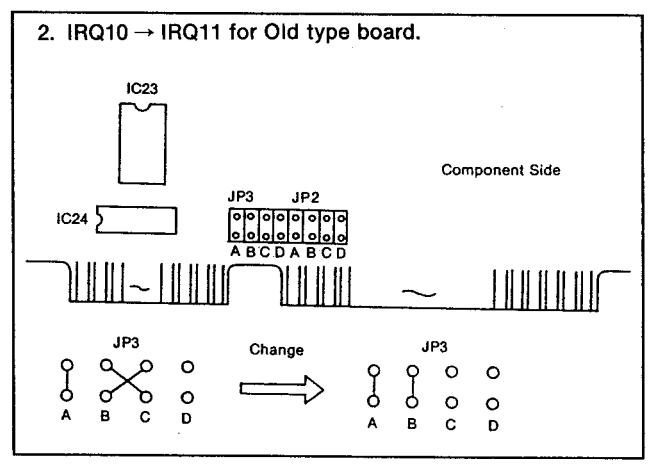

3. IRQ10 → IRQ5 for New type board.

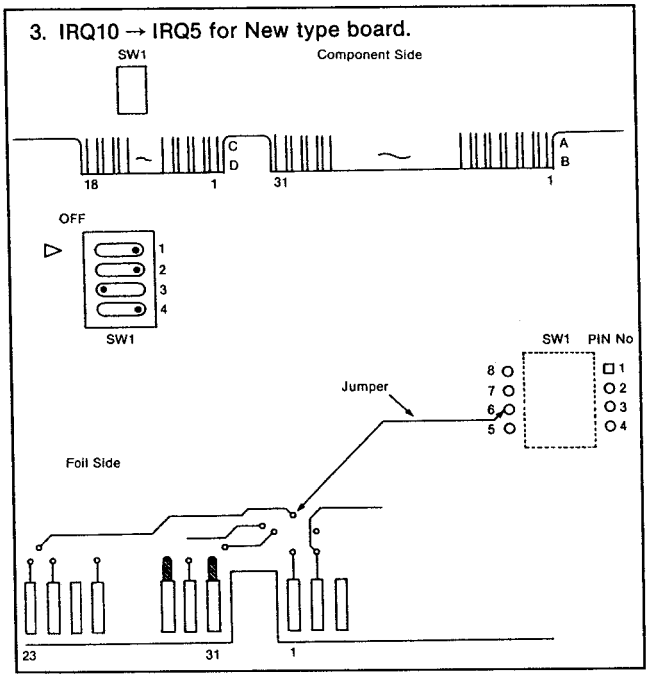

4. IRQ10 → IRQ11 for New type board.

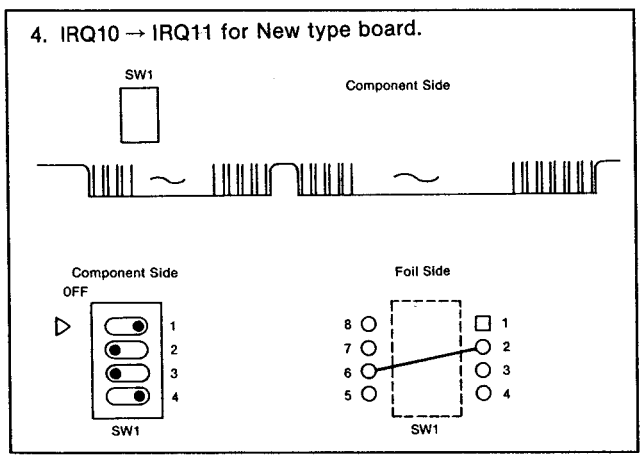

Personal computer setup (ELMEC A/D Board Only)

(1) Insert the 3.5" floppy disk into drive A of the computer and confirm the ADCDRV. SYS, ADCDRV_M.SYS and ADCDRV_5.SYS are existed.
(2) Copy your computer config. sys as config.org, this is necessary when you want to return original config. sys setup.
(3) Read the config. sys of your computer and add the following sentence.
DEVICE = ADCDRV. SYS
(4) If IRQ has changed IRQ10 to IRQ11, please change config. sys as follows.
DEVICE = ADCDRV_M.SYS
(5) If IRQ has changed IRQ10 to IRQ5, please change config. sys as follows.
DEVICE = ADCDRV_5.SYS
(6) Overwrite your computer config. sys.
(7) Remove the A drive 3.5" floppy disk and press CTRL + ALT + DEL to reset your computer.

2. SETUP and CONNECTION

STEP 1. A/D CONVERTER BOARD

Install the A/D converter to the AT (16bit) slot.

STEP 2. Cable Connection

AT H SW	-(BNC-IC CLIP)→	REC AMP TP207 (D350) S4(Extension Board) P208(LEFT) 24A (D580)
FE HEAD A/B	----------→	Not required (D350, D580)
CUE REC L	-(BNC-IC CLIP)→	S6(Extension Board) P211((RIGHT)22A(D350)
	-(BNC-50P CABLE)→	Parallel I/O(50P)(D580)
FRAME PULSE	----------→	Not required (D350,D580)
OUTPUT	-(15P Long) ---→	A/D Board (D350,D580)
REC HEAD	-(15P Short) ---→	Head Amp(BOX) (D350,D580)

STEP 3. MAIN UNIT SWITCH EXPLANATION

Front Panel Switch

(1) Power Switch On/Off
(2) Linearity / Head height adjustment select switch
(3) AT HSW -- A/D converter trigger
NORMAL/INVERT select switch.
(4) NEC PC-9801/IBM PC AT computer select switch.

STEP 4. RS-232C Cable

9pin - 25pin RS-232C cross cable is necessary to connect the AJ-D350/D580 and your computer.
This cable is not included this set, so please purchase locally.

EXAMPLE OF THE CABLE

D-SUB 9 PIN VTR		D-SUB 25 PIN COMPUTER
HOOD	----------	HOOD, 1
1	----------	4, 5
2	----------	2
3	----------	3
4	----------	6
5	----------	7
6	----------	20
7,8	----------	8

STEP 5. HEAD AMPLIFIER UNIT CONNECTION

1) Head Amp Box

Drum Connector (Green)
→ HEAD AMP(BOX) CN85(Green)
Drum Connector (Red)
→ HEAD AMP(BOX) CN86(Brown)

(D350)
Head Amp (BOX) Connector (Green)
→ P504 (Green) VTR Rec Amp
Head Amp (BOX) Connector (Red)
→ P511 (Green) VTR Rec Amp

(D580)
Head Amp (BOX) Connector (Green)
→ P503 (Green) VTR Rec Amp
Head Amp (BOX) Connector (Red)
→ P505 (Red) VTR Rec Amp

STEP 6. RS-232C COMMUNICATION

° Cange of Communication parameter

BAUD RATE	:	9600
DATA LENGTH	:	7
START BIT	:	1
STOP BIT	:	1
PARITY	:	ODD

LINEARITY / HEAD HEIGHT MENU Ver. 6.2 INSTRUCTION

1. SCREEN DISPLAY

```
D3/D5
   Linearity / Head Height Mesasurement
==========================================
                              QUATECH Ver. 6.2
- - - - Main Menu - - - - D3/D5 Tool

  [1] AJ-D350          Linearity
  [2] AJ-D350                                  REC Head
  [3] AJ-D350                                  FE Head

  [4] AJ-D310/320      Linearity
  [5] AJ-D310/320      REC Head

  [6] AJ-D340                                  Linearity
  [7] AJ-D340                                  REC Head

  [8] AJ-D580                                  Linearity
  [9] AJ-D580                                  REC Head
  [A] AJ-D580                                  FE Head

  [T] TOOL Selection
  [ESC] QUIT
```

2. Operating Instruction

(1) Start of each software

- Select by cursor key, and hit [ENTER] to start.
- Hit Figure at left side end or alphabet key.

(2) Setting of Tool Type [T] Tool Selection

1) Select by cursor key and hit [ENTER] to start.

```
<TOOL SELECT>     D3 TOOL    D3/D5 TOOL
```

2) Select D3 or D3/D5 TOOL by [←] [→] key.

3) Type of setting Tool is indicated on right/upper portion of screen.

LINEARITY Ver. 6.2 OPERATING INSTRUCTIONS

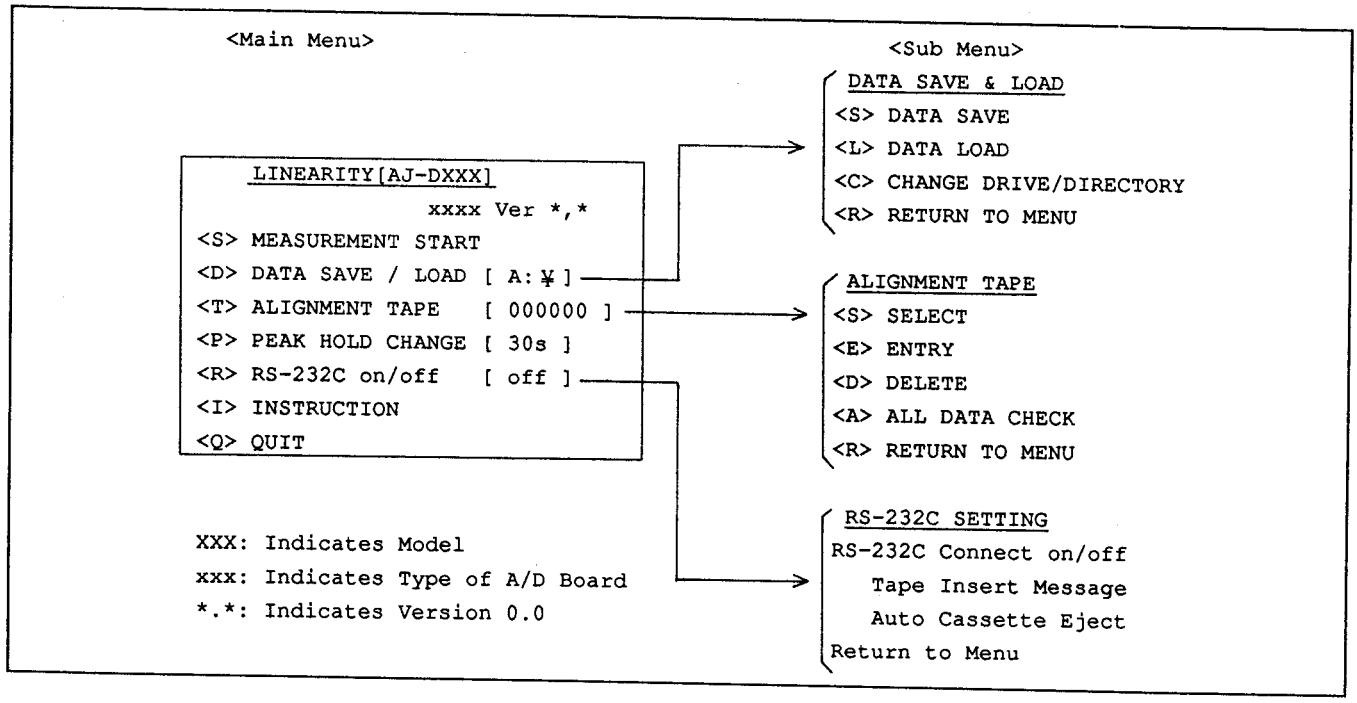

(2) Explanation of each Function.

2-1. Main Menu

<S> MEASUREMENT START

<D> DATA SAVE . LOAD [A:¥]
→ Sub Menu (2-2) [Indicates drive, directry for data save / load]
<T> ALIGNMENT TAPE [000000]
→ Sub Menu (2-3) [Indicates Serial No. of Alignment Tape to be selected]
<P> PEAK HOLD CHANGE [30s]
Setting of Peak Hold Time [indicates Setting time]
<R> RS-232C on/off [off]
→ Sub Menu (2-4) Connection or no connection of RS-232C cable, Function setting at connection [Indicates existence of cable connection.]
<I> INSTRUCTION
Display the setting and connection procedures Tool and VTR.
<Q> QUIT
Completion of Linearity Alignment

2-2. Sub Menu (DATA SAVE / LOAD)

<S> DATA SAVE
Save of data. Write File Name (No escape command), Comment.
<L> DATA LOAD
Load of data, Write File Name (No escape command).
<C> CHANGE DRIVE / DIRECTRY [A:¥]
Change of drive and directry to save and load the data.
<R> RETURN TO MENU
Return to Main Menu.

2-3. Sub Menu (ALIGNMENT TAPE)

<S> SELECT
Selection of Alignment Tape correction data
<E> ENTRY
Input of Alignment Tape correction data
<D> DELETE
Deletion of Alignment Tape correction data

<A> ALL DATA CHECK
Review of Alignment Tape all data
<R> RETURN TO MENU
Return to Main Menu

(3) Flowchart of Linearity Measurement

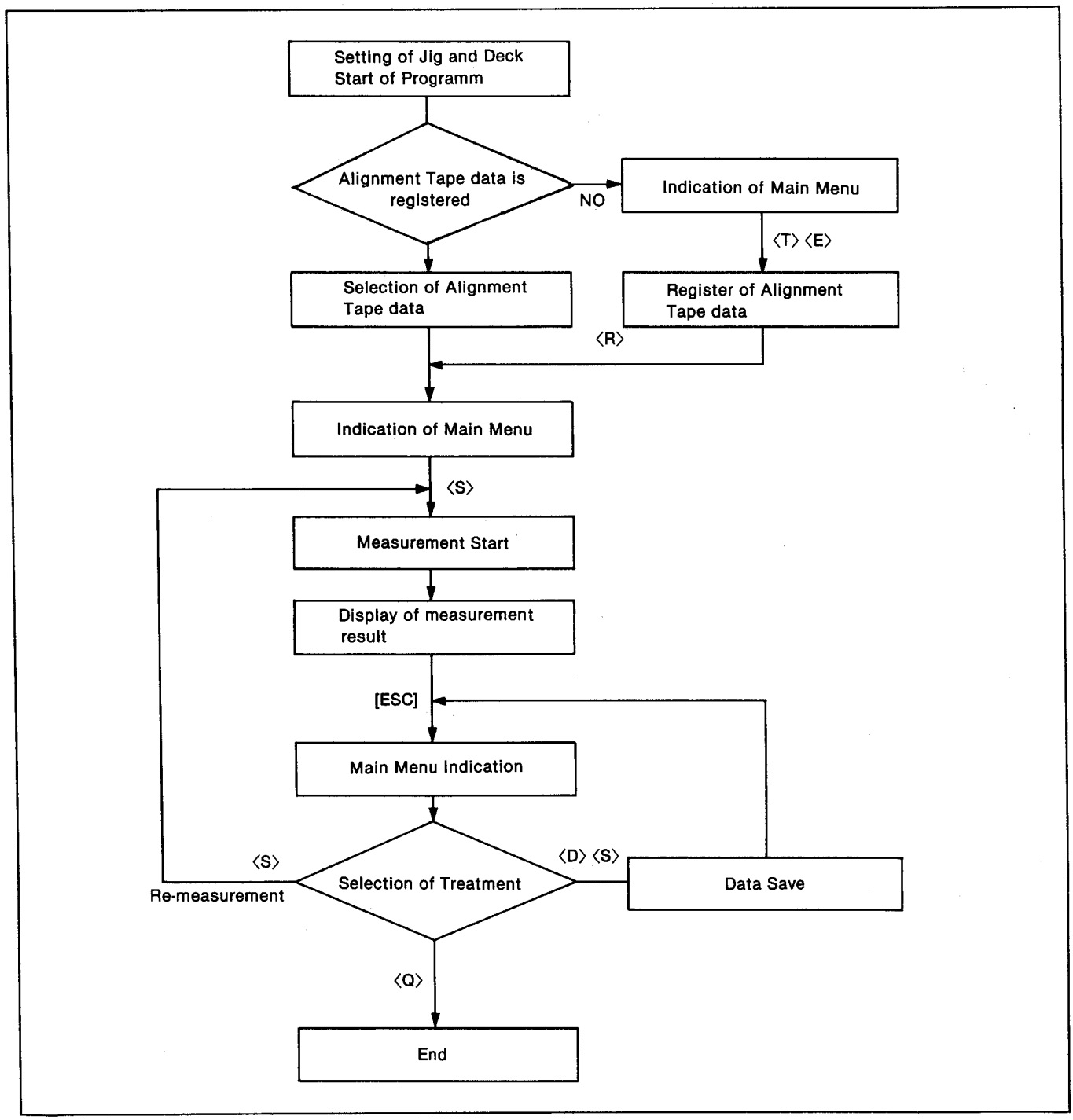

LINEARITY ADJUSTMENT

<TOOL CONDITION>
MODE : LINEARITY

1. Select the AJ-D350 LINEARITY menu in the MAIN menu.
2. Select the serial No. of the ALIGNMENT TAPE (No.3). If the alignment tape data is not stored, hit the ENTER key to go to the linearity menu, and input the data in the <T> ALIGNMENT TAPE menu.
3. Play back the Alignment Tape and hit <S> key to start a measurement.
4. The linearity value is less than 3μm and waving value is less than 1.5μm.
5. If necessary, fine adjust P3, P4 and P5 for the entrance side and P6 for the exit side.

LINEARITY [AJ-D350]

QUATECH Ver. 6.2
D3/D5 TOOL

<S> MEASUREMENT START
<D> DATA SAVE / LOAD [C:\]
<T> ALIGNMENT TAPE [0000(NTSC)]
<P> PEAK HOLD CHANGE [20s]
<R> RS-232C on/off [on]
<I> INSTRUCTION
<Q> QUIT

AJ-D350

File Name : 1553E4.L35
Date/Time : 1994-03-28 14:22:15
Alignment Tape: 3039003

Serial No.: E2TMD1553 (PAL)
OP: 5179 Hours HR: 896 Hours
TT : 3237 Hours TH : 8538 Times

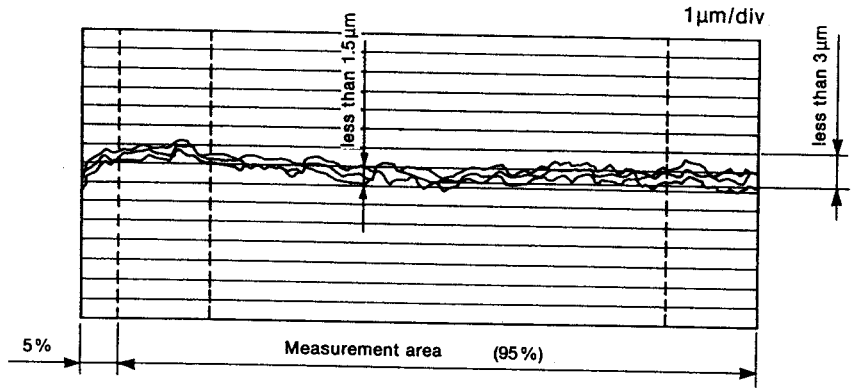

REC HEAD HEIGHT Ver. 6.2 OPERATING INSTRUCTIONS

REC and FE HEAD HEIGHT ADJUSTMENT NOTICE

When adjust the REC or FE HEAD HEIGHT, please note following items.

1. First of all, slightly turn hex screw CCW for release the screw lock.
2. Slightly turn hex screw CW so that the hex screw will be returned original locked position.
3. Then, start to adjust the head height.
4. The pitch of hex screw is 0.4mm so 1 degree is about 1 micron. Please do not turn hex screw more than 20 degrees. If you shift more than 20 degrees you will shift the head position from the video track.

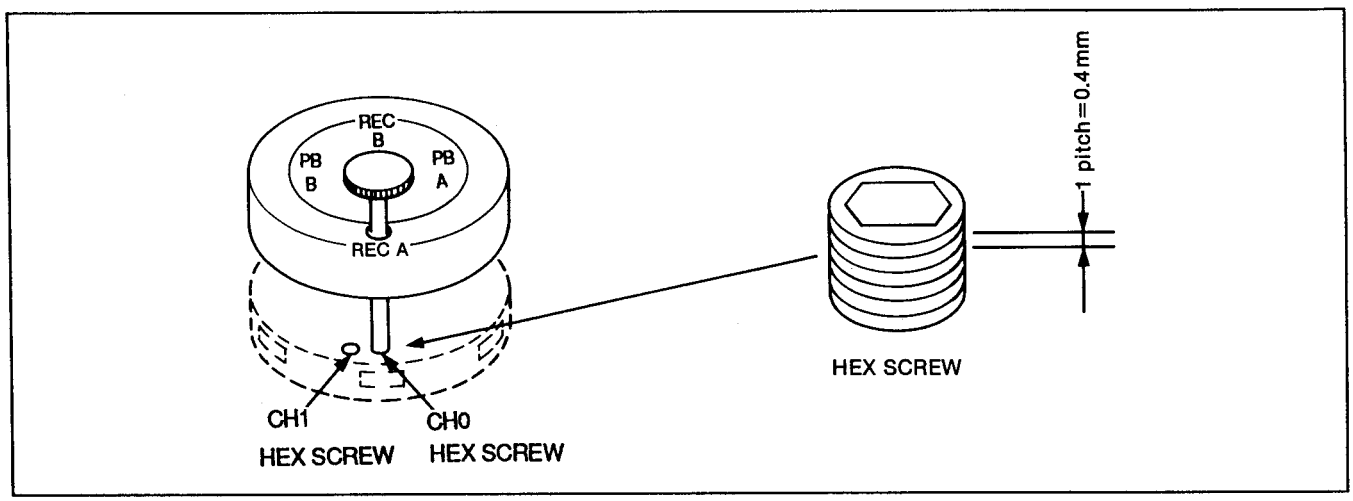

(1) MENU LIST

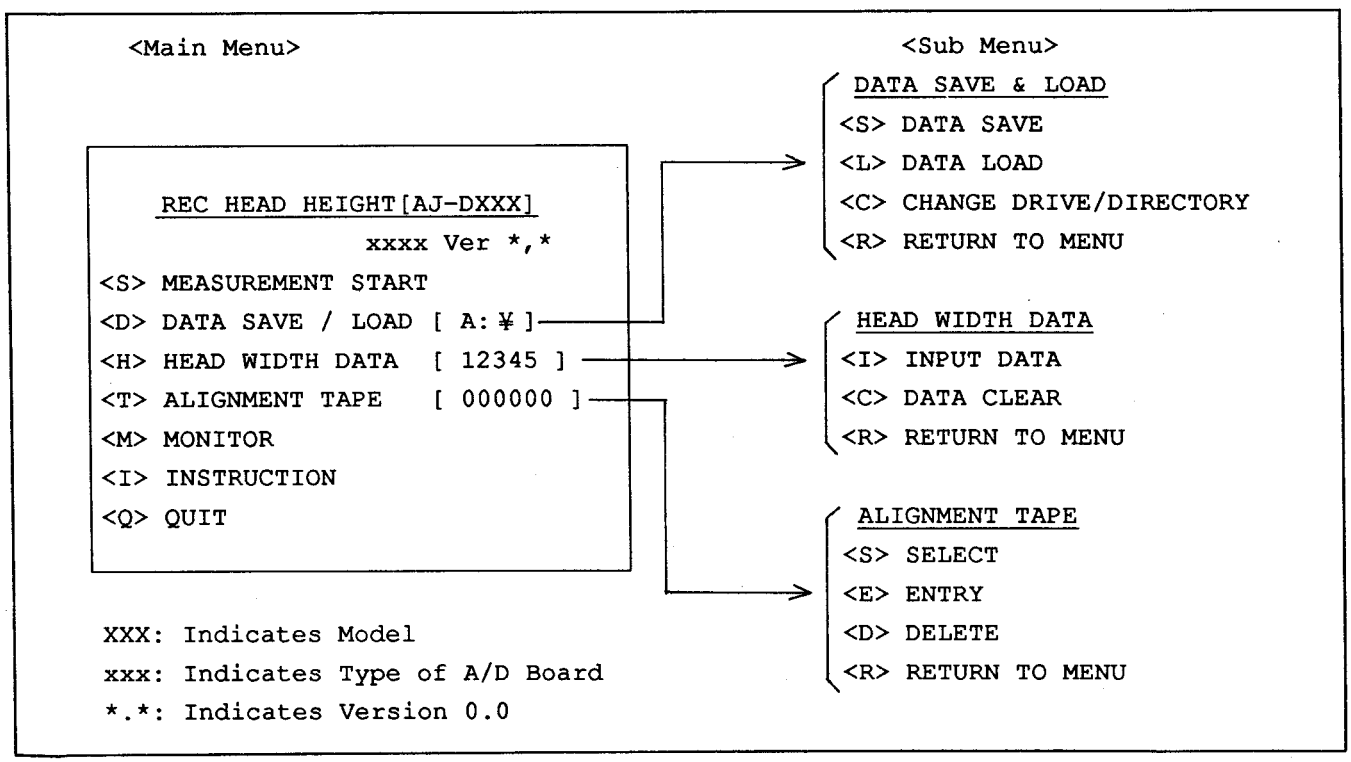

(2) EXPLANATION OF EACH FUNCTION

2-1. Main Menu

<S> MEASUREMENT START

<D> DATA SAVE / LOAD [A:¥]
→ Sub Menu (2-2) [Indicates drive, directry for data save / load]
<H> HEAD WIDTH DATA [12345]
Sub Menu (2-3) [Indicates the Center Drum No. that the head width data has been recorded but indicates "Default" when having no record.]
<T> ALIGNMENT TAPE [000000]
→ Sub Menu (2-4) [Indicates Serial No. of Alignment Tape to be selected]
<M> MONITOR
Indicates the data of A/D conversion.
<I> INSTRUCTION
Display the setting and connection procedures of Tool and VTR.
<Q> QUIT
Completion of Linearity Alignment

2-2. Sub Menu (DATA SAVE / LOAD)

<S> DATA SAVE
Save of data. Write File Name (No escape command), Comment.
<L> DATA LOAD
Load of data. Write File Name (No escape command).
<C> CHANGE DRIVE / DIRECTRY [A:¥]
Change of drive and directry to save and load the data.
<R> RETURN TO MENU
Return to Main Menu.

2-3. Sub Menu [HEAD WIDTH DATA]

<I> INPUT DATA
Write the Head Track Width Data, Drum No. of the Center Drum, A ch Data, B ch Data.
<C> DATA CLEAR
Make the Head Track Width Data to the default value.
<R> RETURN TO MENU
Return to Main Menu

2-4. Sub Menu (ALIGNMENT TAPE)

<S> SELECT
Selection of Alignment Tape correction data
<E> ENTRY
Input of Alignment Tape correction data
<D> DELETE
Deletion of Alignment Tape correction data
<R> RETURN TO MENU
Return to Main Menu

(3) FLOWCHART OF REC HEIGHT MEASUREMENT / ALIGNMENT

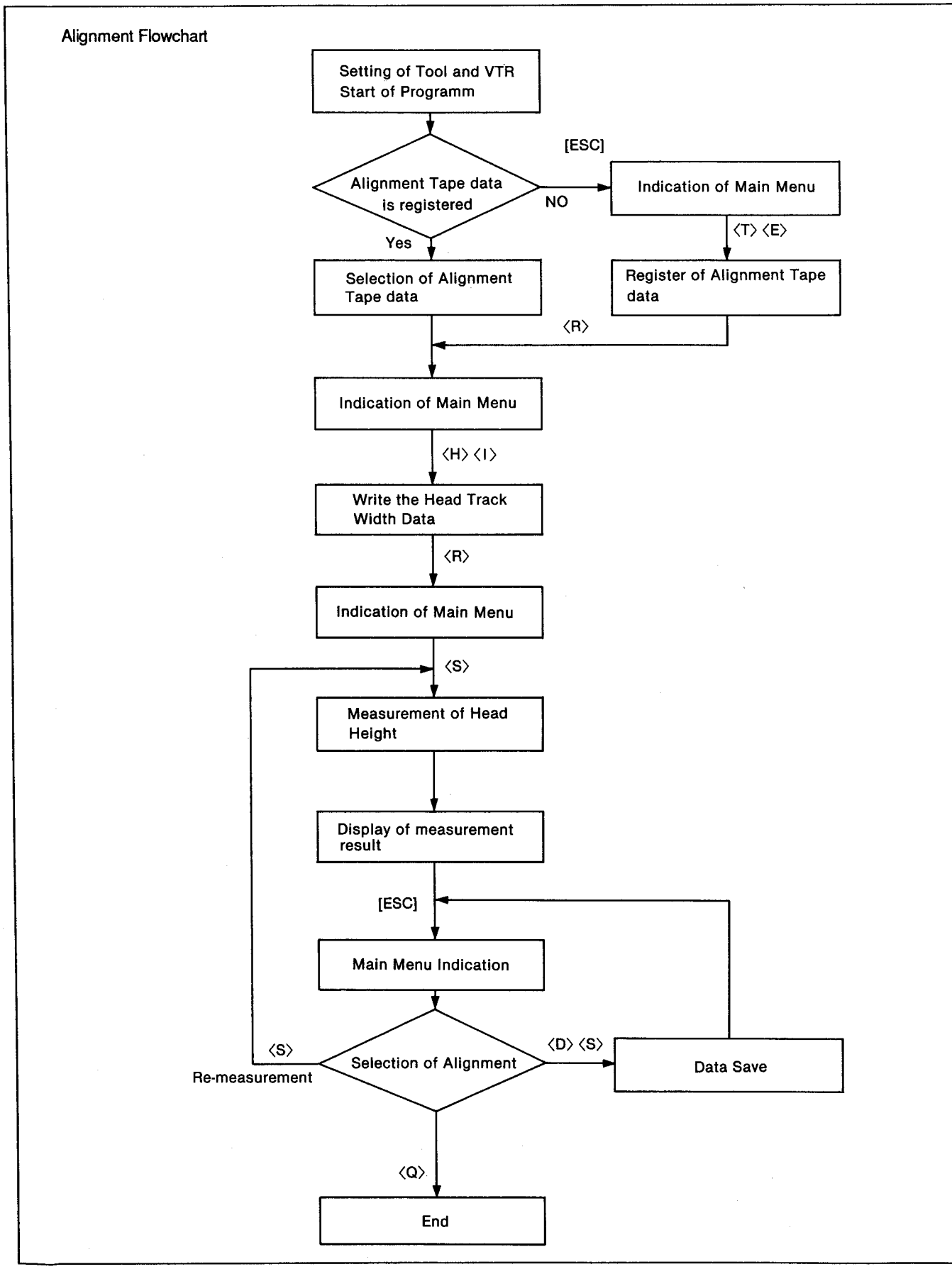

MEASUREMENT FLOWCHART

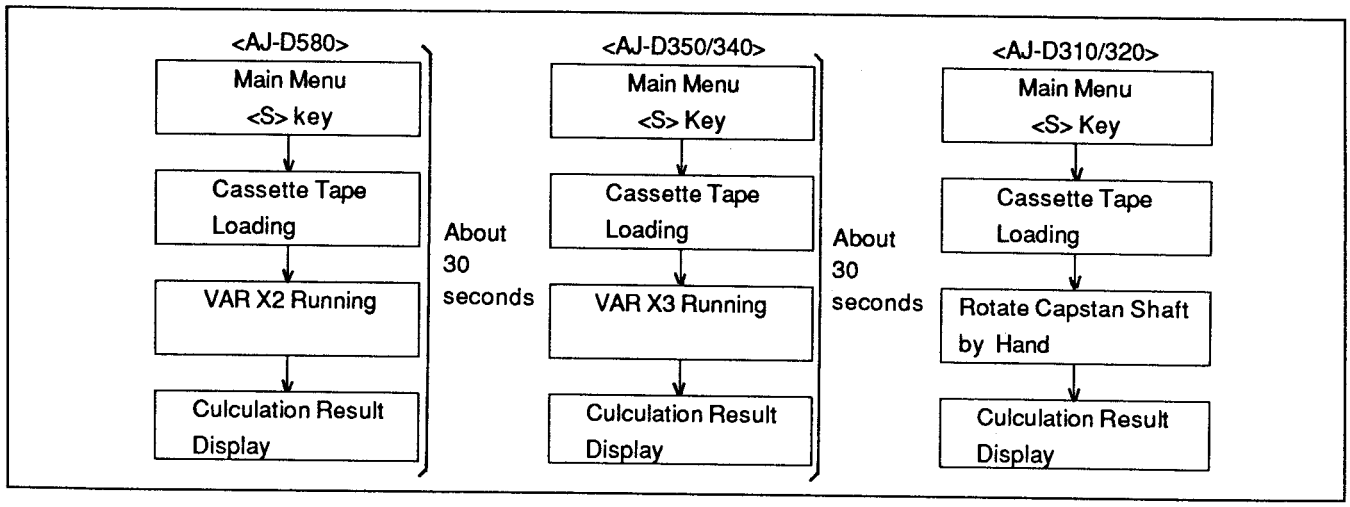

REC HEAD HEIGHT ADJUSTMENT

<TOOL CONDITION>
MODE : HEAD HEIGHT

1. Select the AJ-D350 REC HEAD menu in the MAIN menu.
2. Select the serial No. of the ALIGNMENT TAPE (No.2 color bar). If the alignment tape data is not stored, hit the ENTER key to go to the REC HEAD menu, and input the data in the <T> ALIGNMENT TAPE menu.
3. Select the <H> HEAD WIDTH DATA in the REC HEAD menu, and input the number written on the center drum. If that number is not input, the default data can be used.

```
REC HEAD HEIGHT [AJ-D350]
=========================================
                    QUATECH Ver. 6.2
                     D3/D5 TOOL
 <S> MEASUREMENT START
 <D> DATA SAVE / LOAD      [C:\]
 <H> HEAD WIDTH DATA       [Default]
 <T> ALIGNMENT TAPE        [0000]
 <M> MONITOR
 <I> INSTRUCTION
 <Q> QUIT
```

HEAD WIDTH DATA INPUT PROCEDURE

3-1. Select <H> key so that the following display is indicated.

```
[ HEAD WIDTH DATA ]
  Drum No, :DEFAULT (PAL)
  ..........................................................
  |<Head ch>|    0A      1A   |    0B      1B    |
  ==========================================
  |<TW(um)>|    20.0    18.0  |    20.0    18.0  |
  ..........................................................
  |< Data  >|    chA [5030]   |    chB [5030]   |
  ..........................................................
    <I>  INPUT DATA
    <C>  DATA CLEAR
    <R>  RETURN TO MENU
```

3-2. Select [I] key (INPUT DATA) and input the Head width Data which is adhered on the center drum as follows. (Center Drum with Head Width Data has been introduced on Jan. '95.)

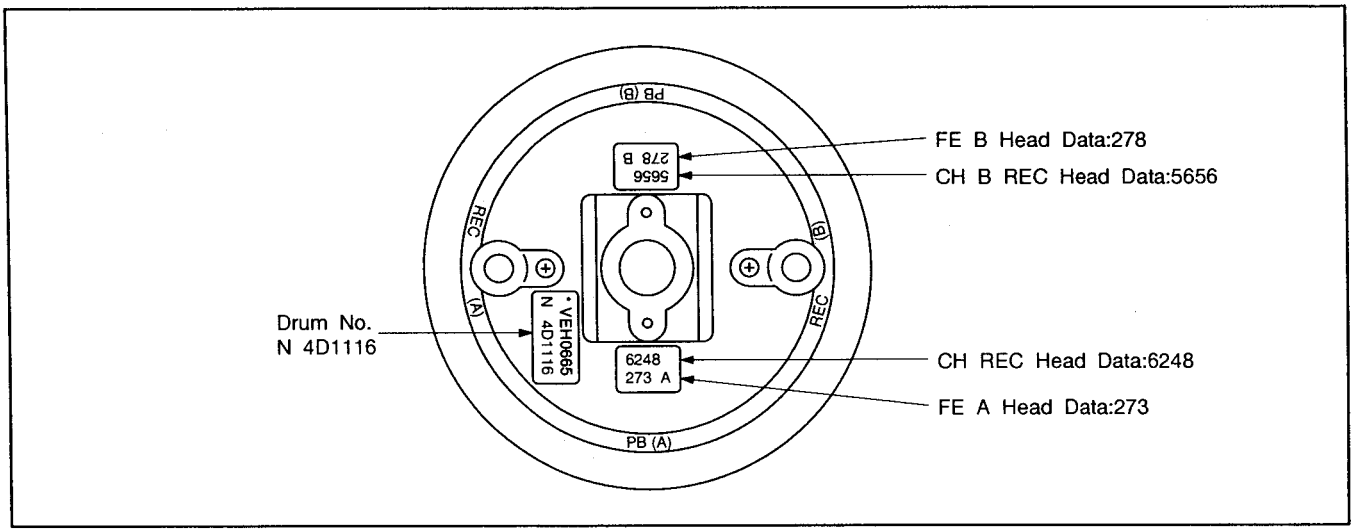

Drum No.	?	←	N4D1116
chA Head Data	?	←	6248
chB Head Data	?	←	5656
ok ? (y/n)			

After input the Drum No. and Head Data, enter "Y" key so that the data is displayed as follows.

[HEAD WIDTH DATA]
Drum No. : N4D1116

<Head ch>	0A	1A	0B	1B
<TW(um)>	20.3	18.6	20.0	17.9

<Data> chA [6248] chB [5656]

3-3. Enter [R] key to return to main menu.

4. Set the CONTROL mode in the VTR to REMOTE.
5. Hit <S> key and insert the Alignment tape (No.2 color bar).
6. The specification is 0 ± 1μm. If necessary, adjust each head height except ch 1A.
   * Don't touch the 1A head because it is the reference head.
7. After the adjust, make 3 times of measurement to confirm.

* During Head Height adjustment (REC and FE) important notice is indicated on the display as follows.

IMPOTANT NOTICE:

Too much downward adjustment of the head height screws may damage the head base. To protect this over adjustment, the following procedures are necessary.

1) Rotate each adjustment screw COUNTERCLOCKWISE (↺) slightly to make the adjustment screw free from GLUE.
2) Then adjust the screw according to the computer display result.

《AJ-D350》

AJ-D350

File Name : 1553E4.R35 Serial No.: E2TMD1553 (PAL)
Date/Time : 1994-03-28 14:36:21 OP: 5179 Hours HR: 896 Hours
Alignment Tape : 9039080 TT : 3237 Hours TH : 8541 Times
Head Width Data: Default

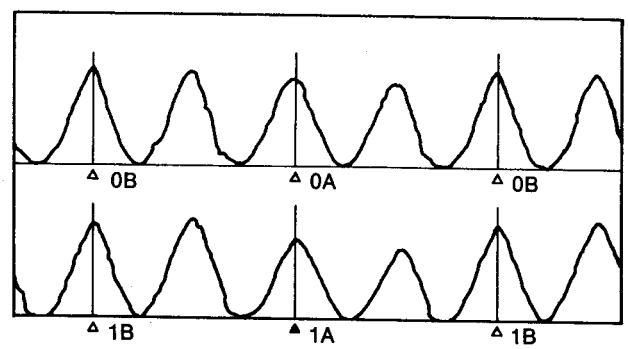

0A −0.7μm
0B −0.3μm

1B 0.4μm

▲ mark means Ref. Head

FE HEAD HEIGHT Ver. 6.2 OPERATING INSTRUCTIONS

(1) MENU LIST

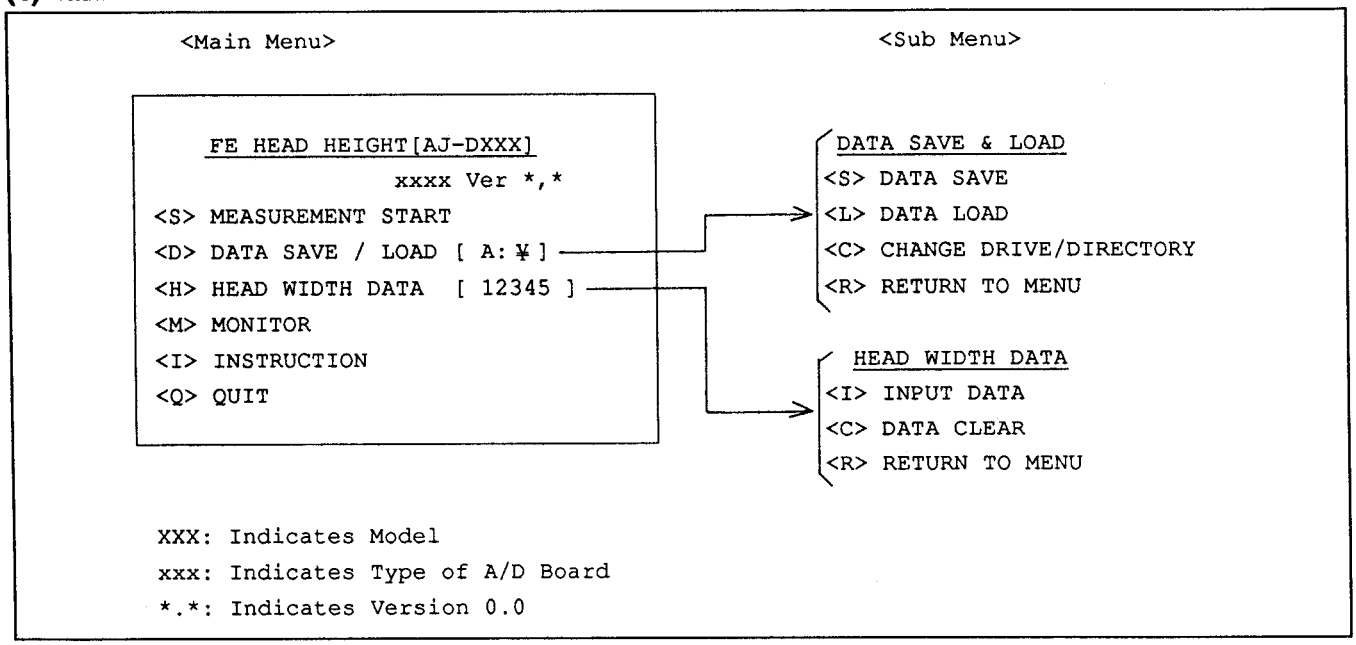

(2) EXPLANATION OF EACH FUNCTION

2-1. Main Menu

<S> MEASUREMENT START

<D> DATA SAVE / LOAD [A:¥]
Sub Menu (2-2) [Indicates drive, directry for data save / load]

<H> HEAD WIDTH DATA [12345]
Sub Menu (2-3) [Indicates the Center Drum No. that the head width data has been recorded but indicates "Default" when having no record.]

<M> MONITOR
Indicates the data of A/D conversion.

<I> INSTRUCTION
Display the setting and connection procedures of Tool and VTR.

<Q> QUIT
Completion of FE HEAD HEIGHT Alignment

2-2. Sub Menu (DATA SAVE / LOAD)

<S> DATA SAVE
Save of data. Write File Name (No escape command), Comment.

<L> DATA LOAD
Load of data. Write File Name (No escape command).

<C> CHANGE DRIVE / DIRECTRY [A:¥]
Change of drive and directry to save and load the data.

<R> RETURN TO MENU
Return to Main Menu.

2-3. Sub menu (HEAD WIDTH DATA)

<I> INPUT DATA
Write the Head Track Width Data, Drum No. of the Center Drum, A ch Data, B ch Data.

<C> DATA CLEAR
Make the Head Track Width Data to the default value.

<R> RETURN TO MENU
Return to Main Menu

(3) FLOWCHART OF FE HEAD HEIGHT MEASUREMENT AND ALIGNMENT

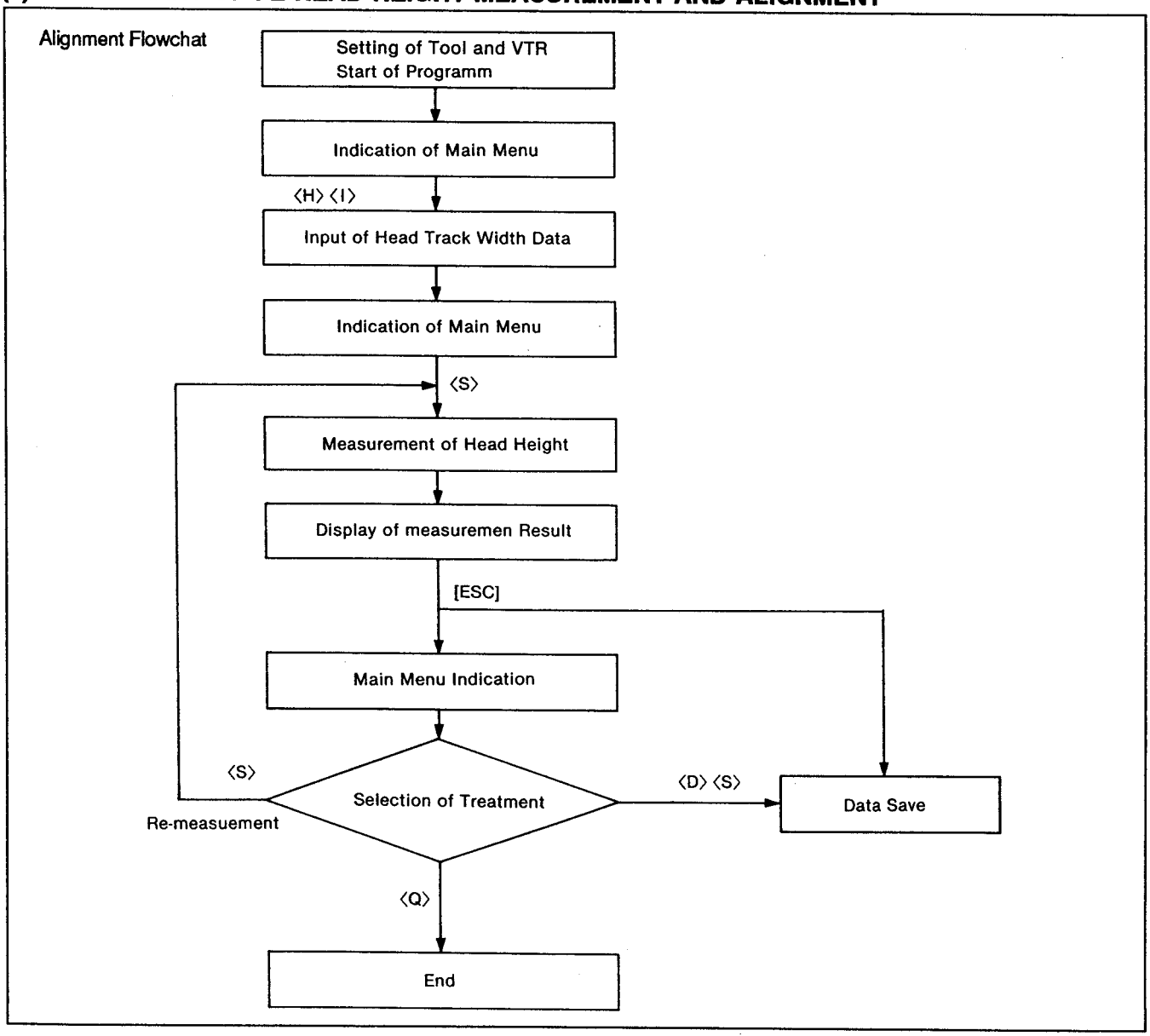

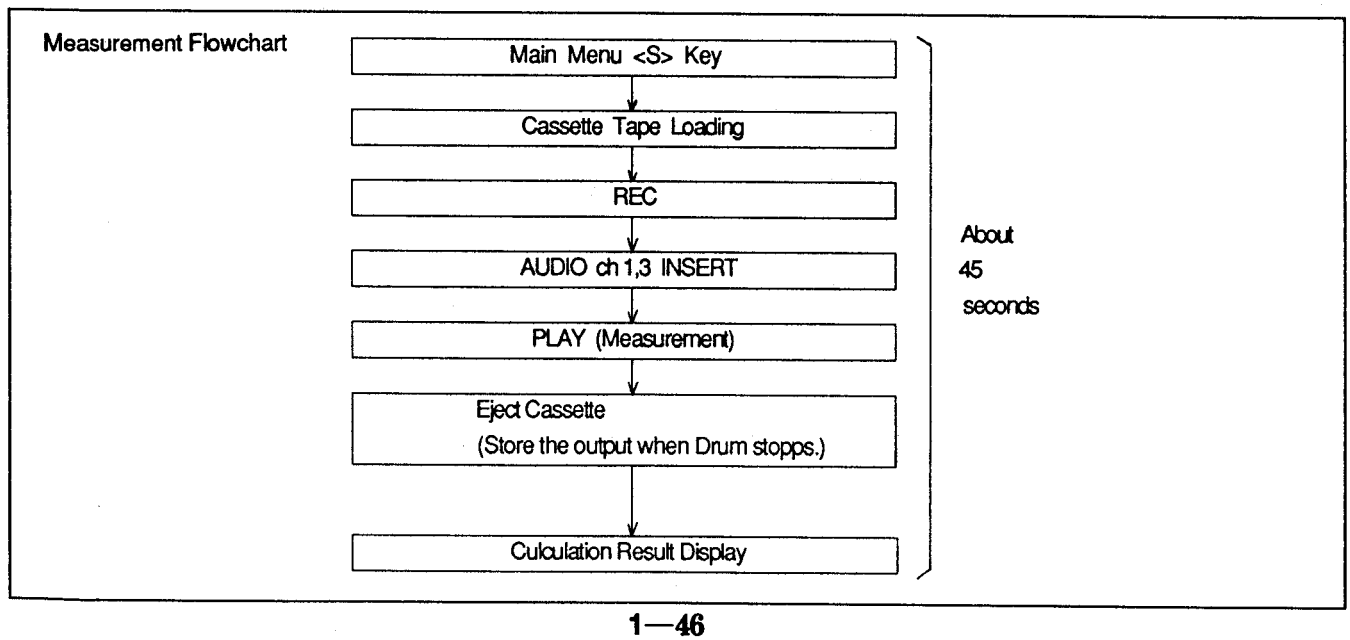

FE HEAD HEIGHT ADJUSTMENT

<TOOL CONDITION>
MODE : HEAD HEIGHT

1. Select the AJ-D350 FE HEAD menu in the MAIN menu.
2. Select the <H> HEAD WIDTH DATA in the FE HEAD menu, and input the number written on the center drum. If that number is not input, the default data can be used. Please refer to Rec Head width data input procedure.
3. Set the CONTROL mode in the VTR to REMOTE.
4. Hit <S> key and insert the D5 self recording tape.
5. The specification is 0 ± 1μm. If necessary, adjust each head height.
6. After the adjustment, make three times of measurement to confirm.

FE HEAD HEIGHT [AJ-D350]

QUATECH Ver. 6.2
D3/D5 TOOL

<S> MEASUREMENT START
<D> DATA SAVE / LOAD [C:\]
<H> HEAD WIDTH DATA [Default]
<M> MONITOR
<I> INSTRUCTION
<Q> QUIT

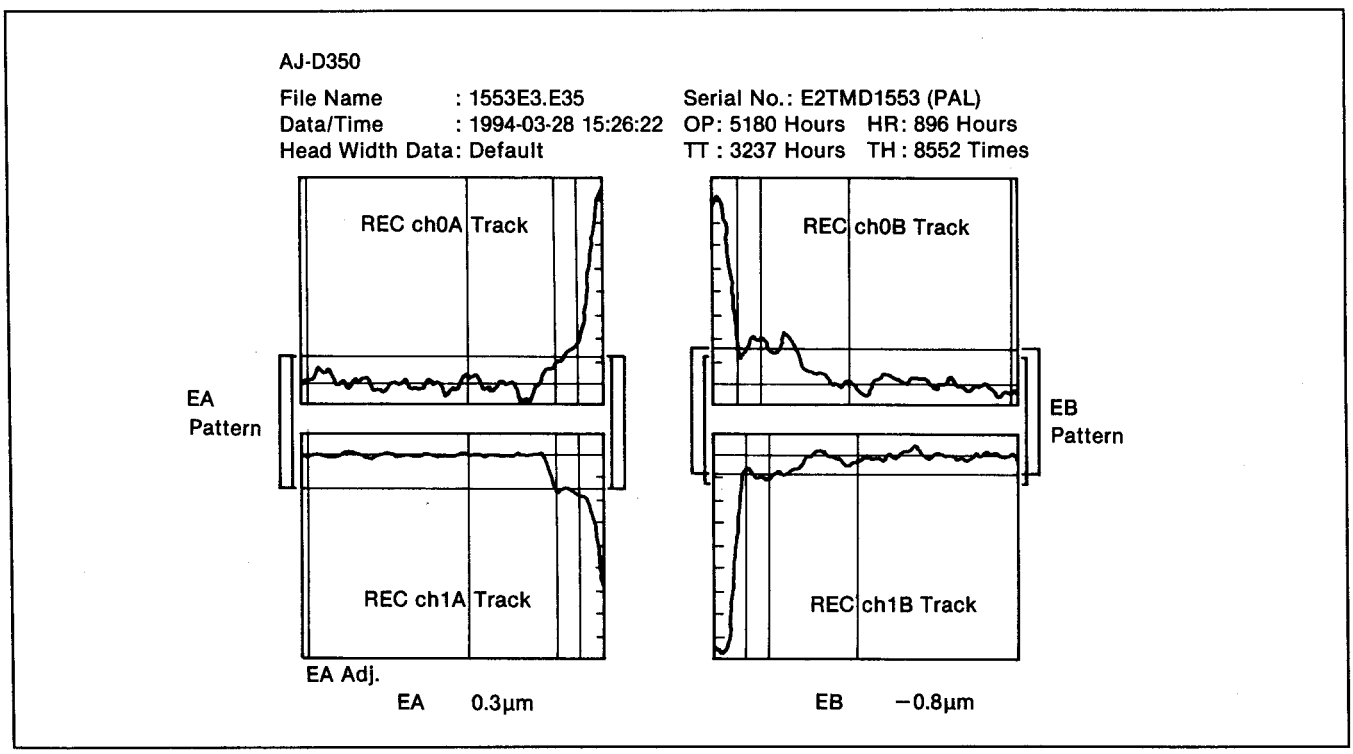

FLYING HEAD HEIGHT CONFIRMATION 1

a) Head Height is correct

Output level of Entrance side of CHB and Exit side of CHA of Audio sector is same drop level as shown in figure.

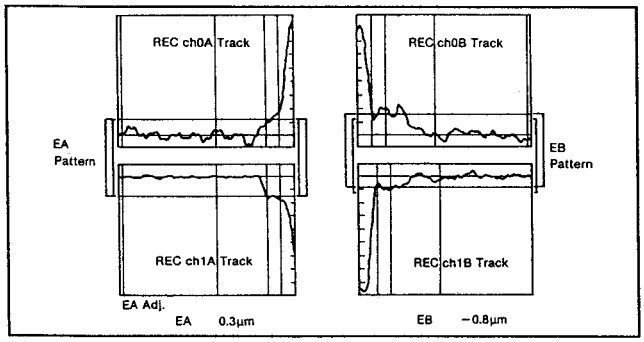

b) If FE CHA Head is Height about +20μm

- Output level of CH0 audio sector has different level as shown in figure.
- Output level of CH1 audio sector is at similar level to video as shown in figure.
  * In this case, adjust the Hex screw of CHA Head in the direction the display indicated on.

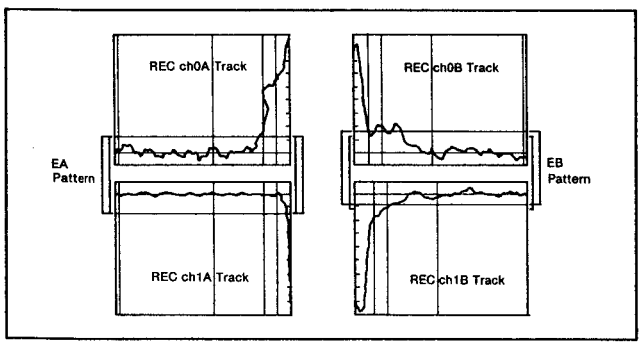

c) If FE CHA Head is Height about +20μm to +40μm.

- Output level of CH0 audio sector drops out as shown in figure.
- Output level of CH1 audio section has different level as shown in figure.
  * In this case adjust the Hex screw of CHA head in a clockwise direction. The Head height goes down, disregard the display indication.

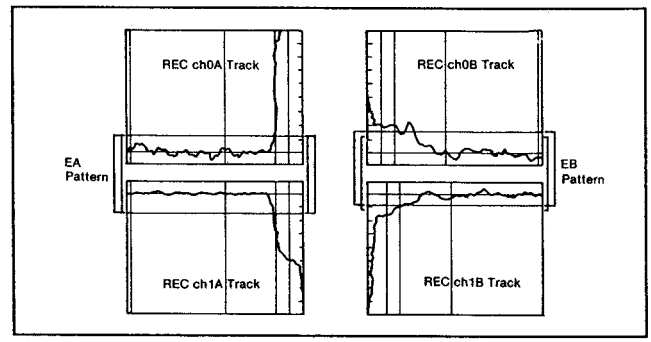

d) If FE CHA is low about -20μm

- Output level of CH0 audio sector is at a similar to video level as shown in figure.
- Output level of CH1 audio sector has different levels as shown in figure.
  * In this care, adjust the Hex screw of CHA Head in the direction indicated on the display.

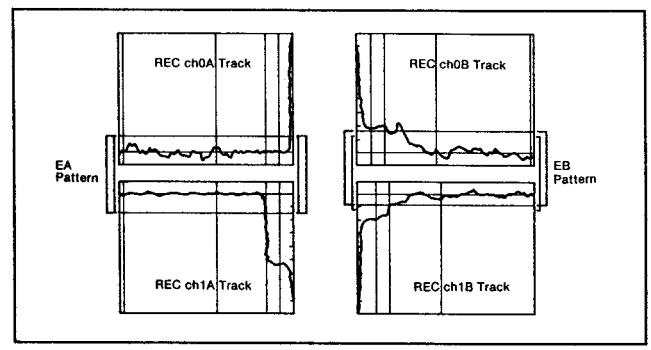

e) If FE CHA is low about -20μm to -40μm

- Output level of CH0 audio sector has different level as shown in figure.
- Output level of CH1 audio sector drops out as shown in figure.
  * In this case, adjust the Hex screw of CHA head to counterclockwise direction. This meaning is Head Height goes up, disregard the display indication.

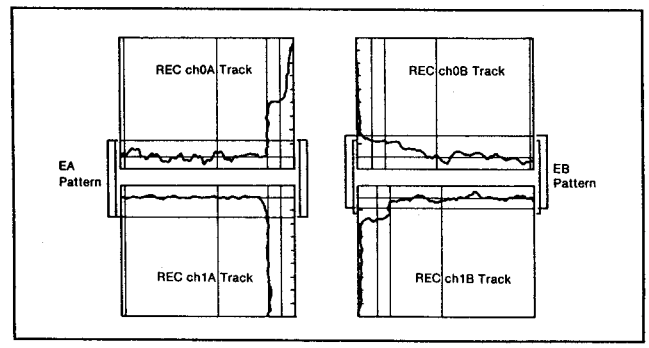

FLYING ERASE HEAD HEIGHT CONFIRMATION 2

1. Insert a work cassette into AJ-D350.
2. Record a color bar and 1KHz audio signal in a few minutes.
3. Rewind a tape to the recording start portion.
4. Disconnect P504 and P511 on the Rec Amplifier board to record no signal.
5. Insert audio CH1 on the just recorded portion.
6. Connect a scope to TP12 (CH1 ENV) and TP207 (TRG) on the Rec Amplifier board.
7. Connect the P504 and P511 on the Rec Amplifier board.
8. Playback the just inserted portion and confirm that only audio CH1 is erased.
9. Confirm CH2 to CH4 using same method.

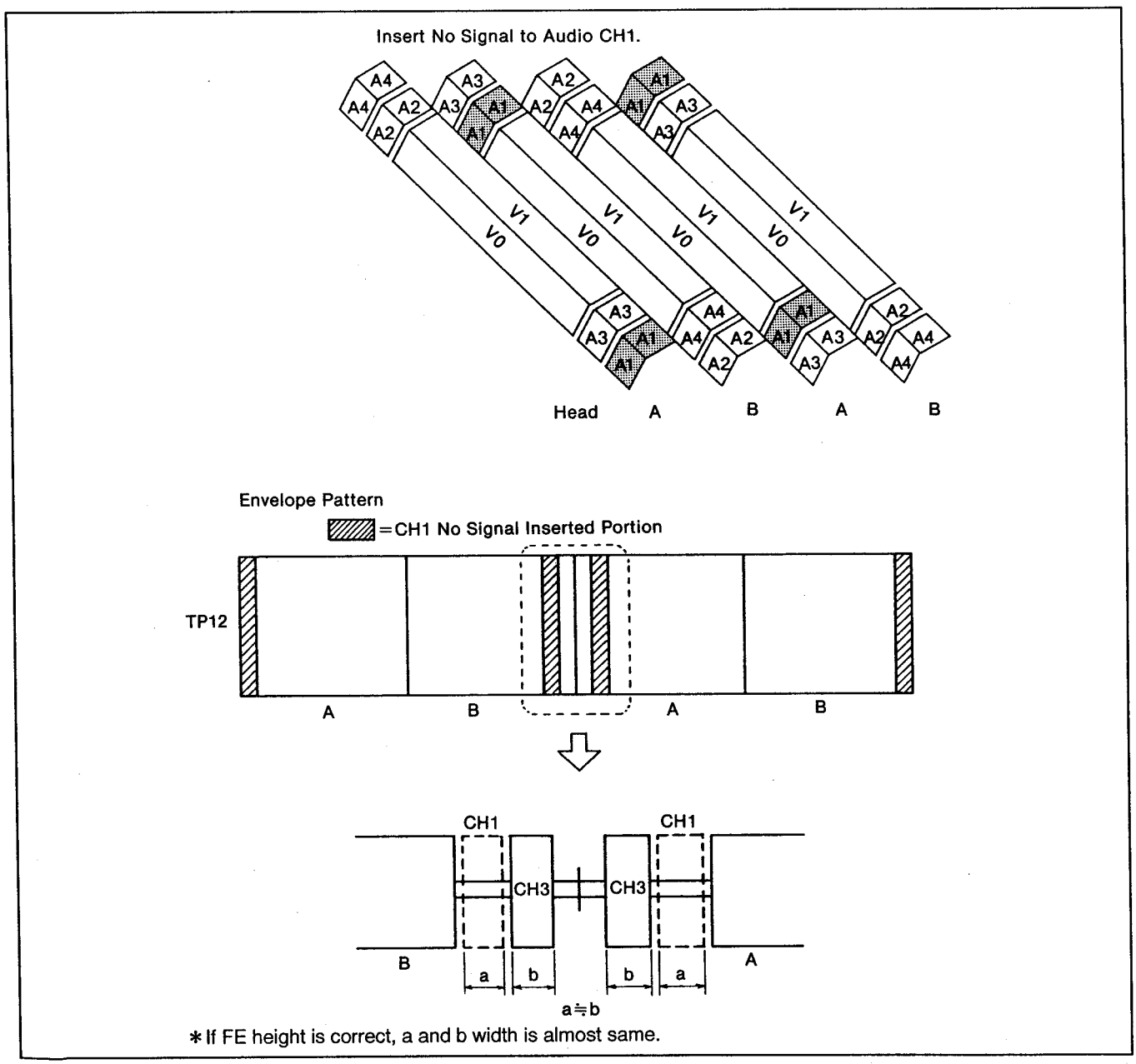

RF ENVELOPE CONFIRMATION BY MODE CHANGE

To confirm the tape which is attached to the drum rabbet, the following steps is necessry.

<STEP 1>

1. Connect the SCOPE CH1 to TP11 (REC AMP BOARD) and CH2 to TP207 (REC AMP BOARD).
2. Insert the Alignment Tape No.2 (0~16min).
3. Change the VTR mode from REW to PLAY and confirm that the envelope is recovered to normal PB condition at the entrance side within 1 second.
4. Change the VTR mode from EJECT to PLAY and confirm that the envelope is recovered to normal PB condition at the entrance side within 1 second.
5. Once place the unit in the STAND BY OFF condition.
   Change the mode to STAND BY ON and then PLAY, and confirm the envelope is recovered to normal PB condition within 1 second.
6. If out of specification, readjust each post as follows.
   a) Entrance side : P3, P4 and P5 Height adjustment
   b) Exit side : P6, Post Height and A/C head tilt adjustment
   c) Center portion : UPPER DRUM position adjustment

<STEP 2>

1. Arrange the computer and tool to Linearity measurement mode. (Use the Alignment tape No.3)
2. Connect the SCOPE CH1 to TP203 on the head amp of Linearity tool (VFK0832/VFK0832A).
3. Connect the SCOPE CH2 to TP207 (REC AMP BOARD) as trigger.
4. Touch the upper edge of the tape between P5 post and the drum on playing back so that the linearity waveform has a 3~4μm drop at the entrance side on computer display.
5. Release the tape and confirm that the envelope (TP203) is recovered to normal PB condition within 1 second on the oscilloscope.
6. Touch the upper edge of the tape between P6 post and the drum on playing back so that the linearity waveform has a 3~4μm drop at the exit side on computer display.
7. Release the tape and confirm that the envelope (TP203) is recovered to normal PB condition within 1 second on the oscilloscope.
8. Flip the P3 post gently on playing back and confirm that envelope (TP203) is recovered to normal PB condition within 0.5 second.
9. If out of specification, readjust each post as follows.
   a) Entrance side : P3, P4 and P5 Height adjustment
   b) Exit side : P6 Post Height and A/C head tilt adjustment

<STEP 3>

1. Insert the alignment tape and play back the color bar portion.
2. Place the unit in the STILL mode.
3. Connect the scope CH1 to TP11 and CH2 to TP12 on the REC AMP board. Trigger is TP207 on the REC AMP Board.
4. Confirm that the envelope is diamond shape as shown below.
5. If it is not, readjust P3 tilt adjustment.

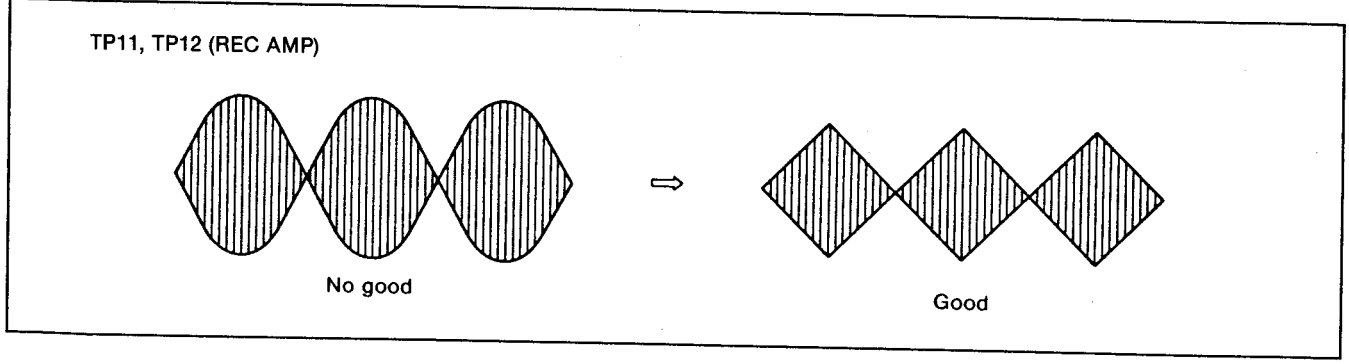

6. Place the unit in the VAR × -1 mode. Make sure that the bottom edge of the tape touches the lower flange of the P7 post without tape curling. If tape curling occurs at the bottom flange of the P7 post, lower both P9 and P10 post slightly than the P8 post until the tape curling disappears.

LINEARITY AND WAVING CONFIRMATION

WAVING CONFIRMATION

1. Set the computer and tool to Linearity measurement mode.
2. Play back the alignment tape No.3.
3. When the space key is pressed, computer is set to the peak hold mode. After 30 seconds computer display indicates the average data.
4. Confirm the waving (less than 1.5μm).

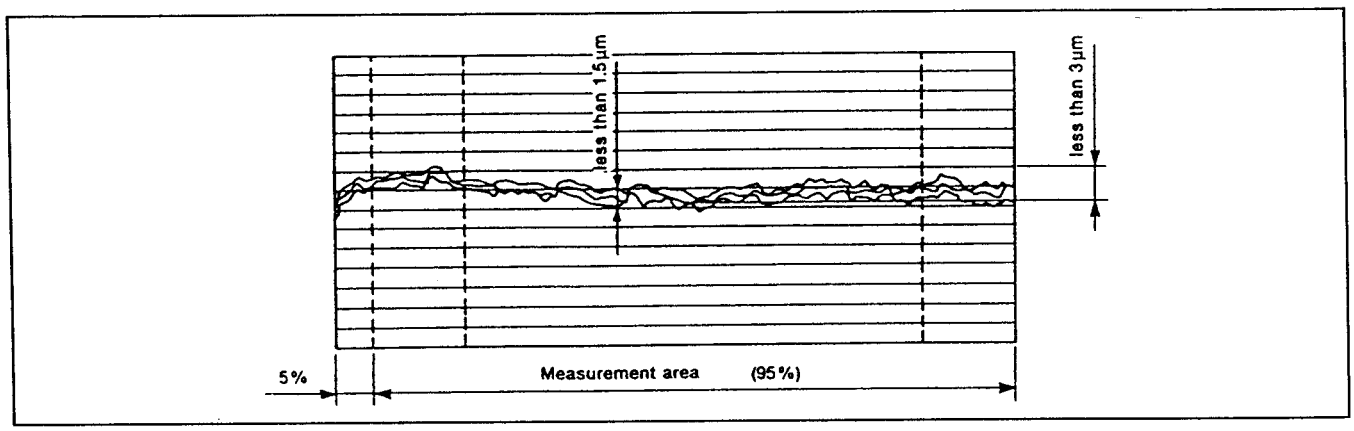

LINEARITY FINAL CONFIRMATION

1. Playback the alignment tape No.3.
2. Set the computer and tool to Linearity measurement mode.
3. Play back the alignment tape No.3.
4. When the space key is pressed, computer is set to the peak hold mode. After 30 seconds computer display indicates the average data.
5. Confirm that the linearity is within 3μm at measurement area.

Note: If some noise occurs during PEAK HOLD mode, it may be caused by the tape.
In this case the measurement can be done by using better portion of the tape with PEAK HOLD mode released.

LINEARITY CURVE CONFIRMATION

If the linearity curve is not straight horizontaly, use the Drum Axis Verticality Unit and adjust the drum axis position.
(Drum Axis Verticality Unit is introduced on Feb. '95)
Please refer adjustment procedure.

1. CURVE (A): Linearity increases toward the exit side.

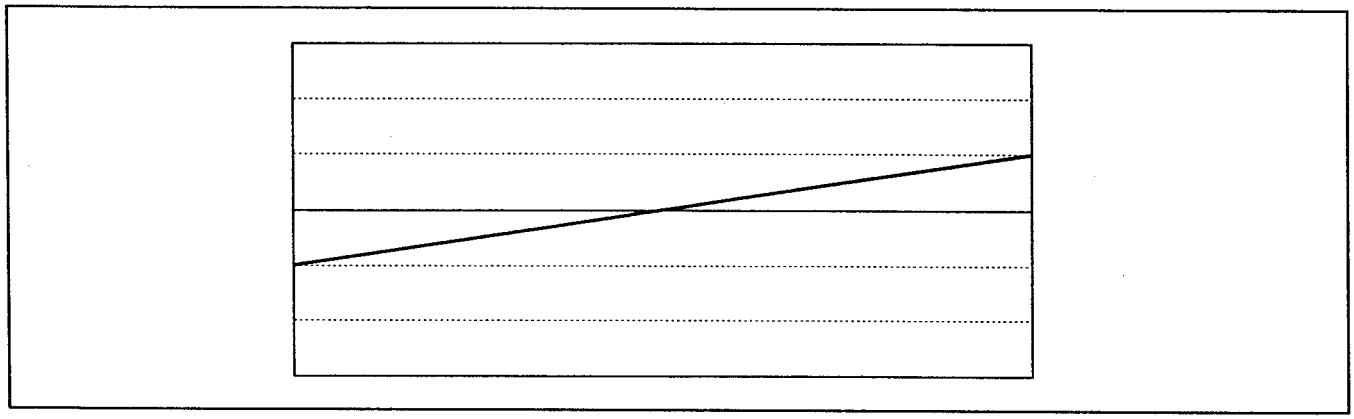

2. CURVE (B): Linearity decreases toward the exit side.

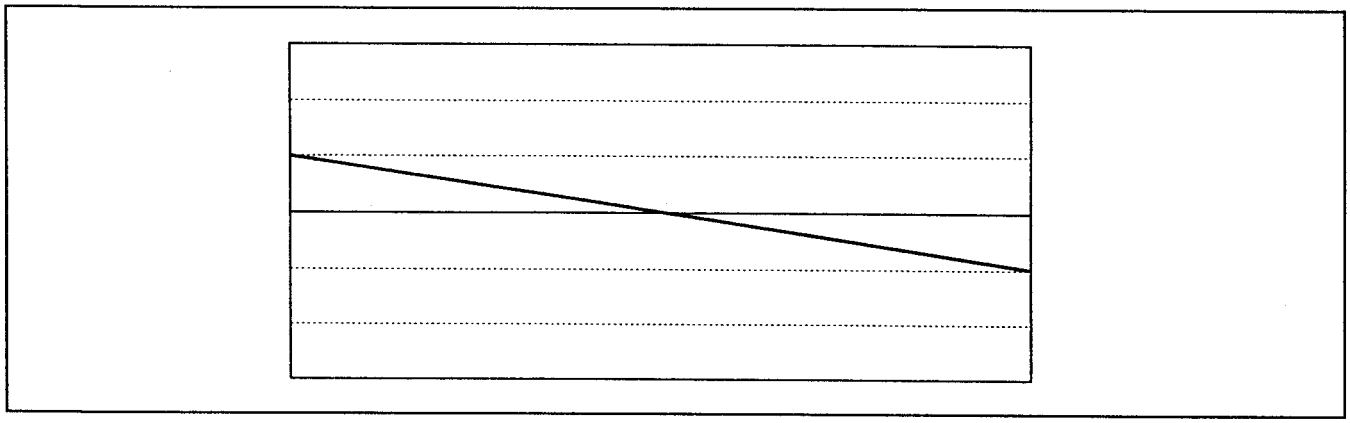

3. CURVE (C): Linearity decreases to center portion and then becomes flat toward the exit side.

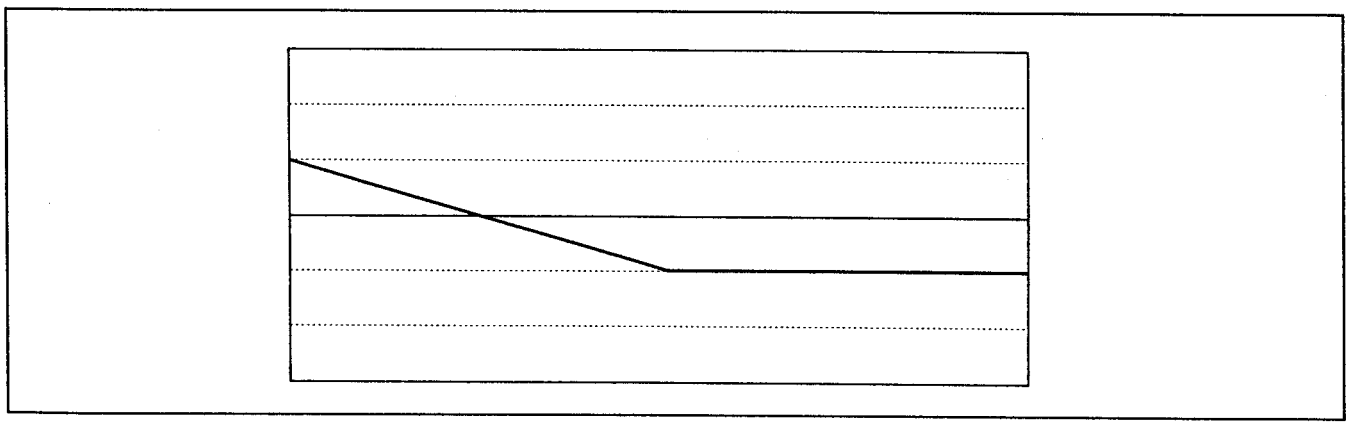

Introduction of Drum Axis Verticality Adjustment Procedure

Drum Axis Verticality Unit is introduced on Feb. '95 from serial No. B2TMG××××.
Drum Unit without this unit is necessary to attach it. Please refer following procedure.

(Preparation)

1. Grate the top portion (3mmø) of Fine Adjustment Screwdriver (VFK0446) from 3mm to 2mm. (refer to Figure 2).

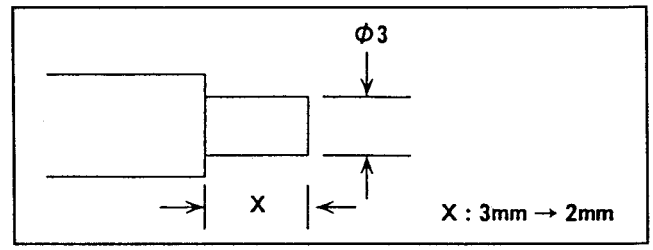

Figure 1

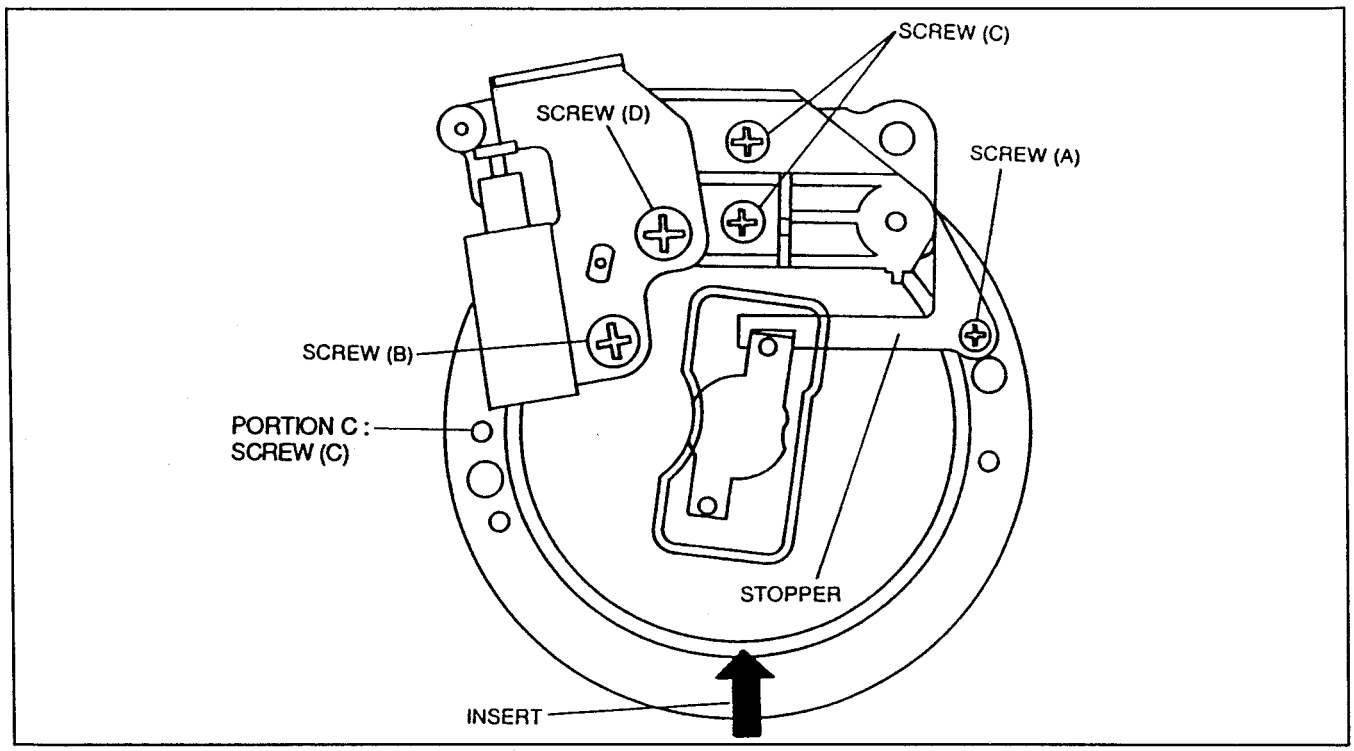

Figure 2

(Attachment Procedure)

Caution: When Drum Axis Verticality Unit is installed, it is necessary to power off the VTR.

1. Confirm whether a hole is made to the potion (C) on the Upper Drum.
   a. If there is a hole at the (C) portion, install as shown below; (refer to Figure 2)
      1) Unscrew the screw (A) to remove the stopper.
      2) Install the base to the Upper Drum following the arrow in Figure 2.
      3) Tighten the screw (A) and (C).
         * It is not necessary to use the attachment angle.
   b. If there is no hole at the (C) portion, install as shown below (refer to Figure 2).
      1) Combine the attachment angle with the base and fix with screw (E)(refer to Figure 3).
      2) Unscrew the screw (A) to remove the stopper (refer to Figure 2).
      3) Unscrew the screw (B)
         Caution: Do not loosen the screw (D).
      4) Install the base with the attachment angle to the drum. Follow the arrow in Figure 2.
      5) Tighten the screw (A) and screw (B).

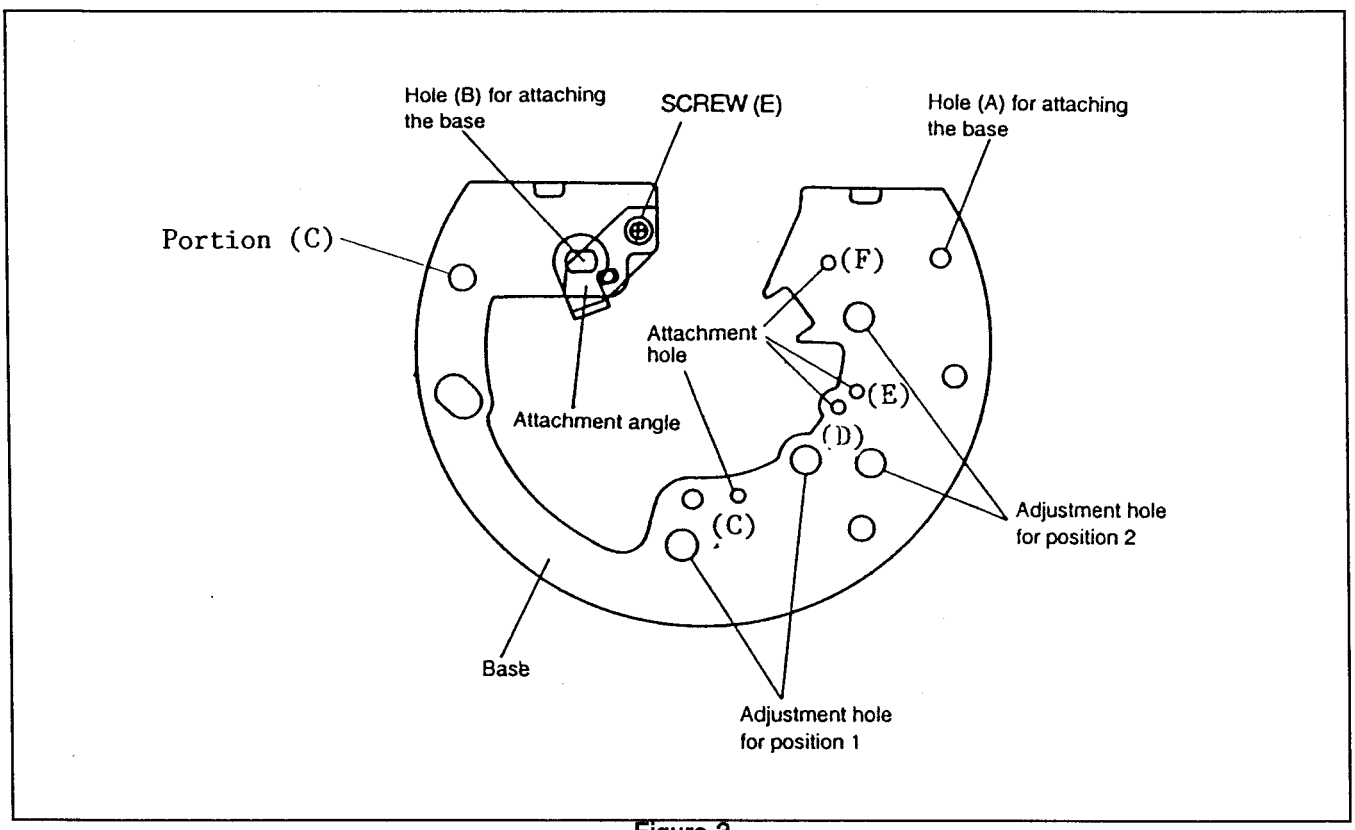

Figure 3

2. **Install the Drum Axis Verticality unit to position 1 or position 2 according to the linearity curve. (refer to adjustment procedure).**

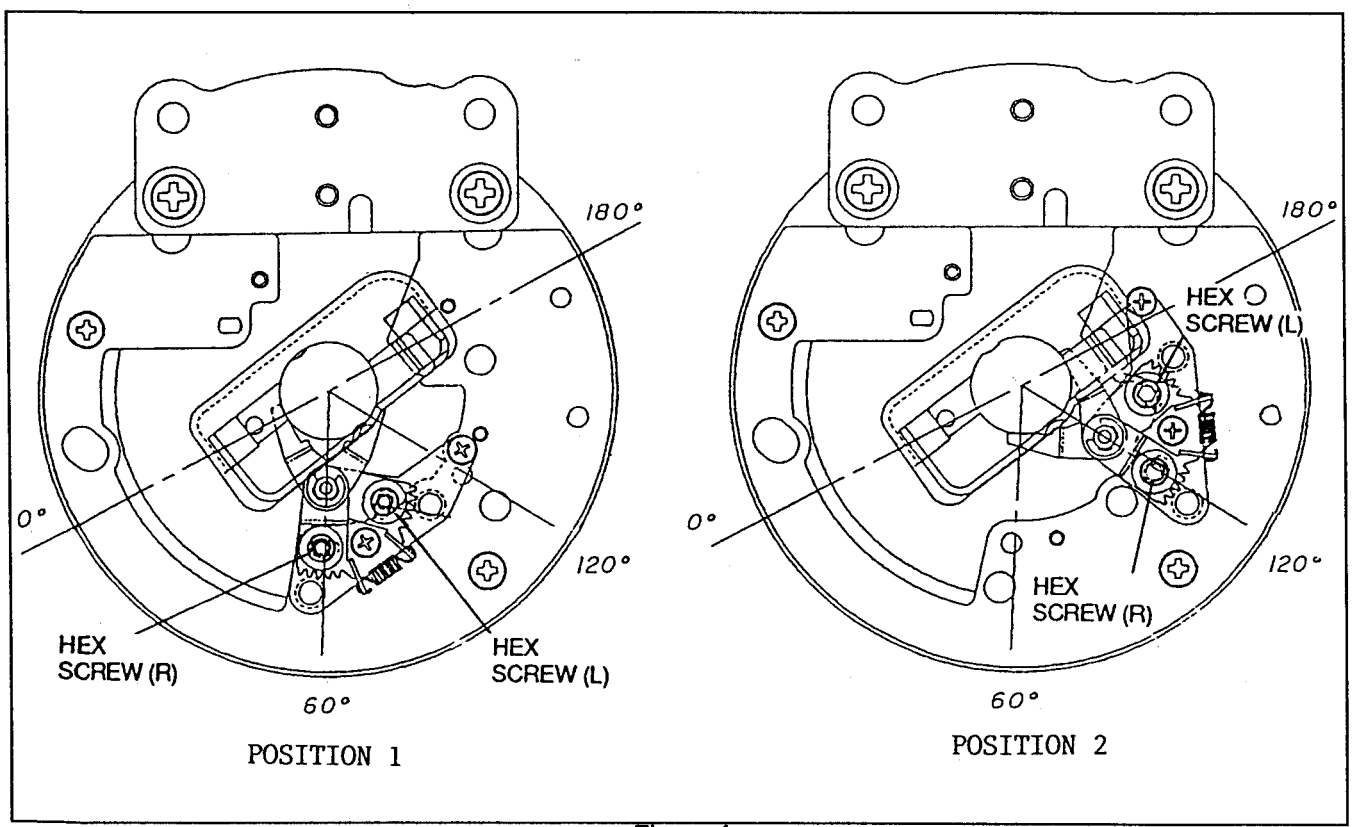

Figure 4

(Adjustment Procedure)

(1) CURVE (A): Linearity increases toward the exit side.

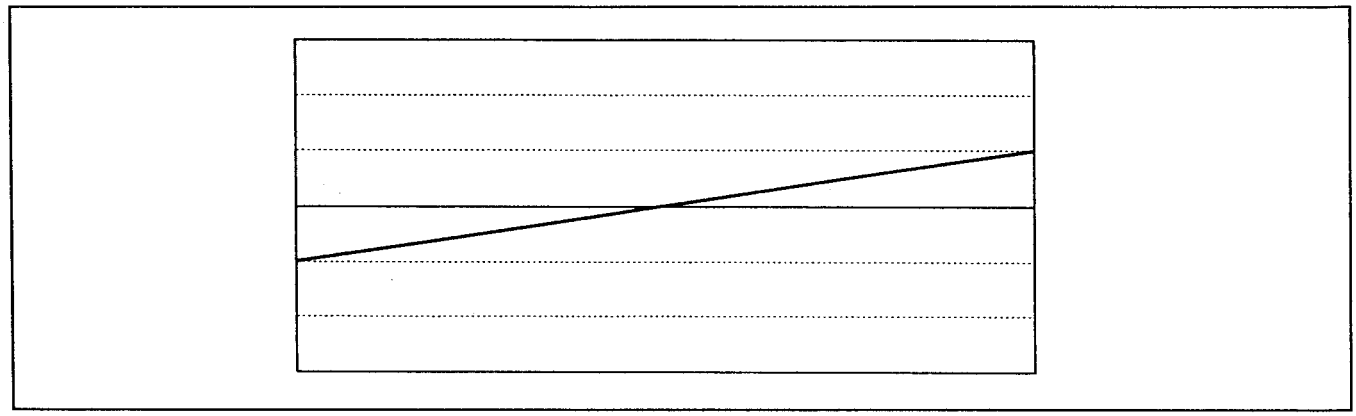

PUSH the Axis toward 180 degrees direction.

1) Remove the screw (L)(refer to Figure 4).
2) Install the Axis Verticality (1) U to position 1 by using attachment hole (C) and (D)(refer to Figure 3).
3) Loosen the screw (R) and insert the fine adjustment screwdriver to the adjustment hole.
4) Adjust the linearity by rotating the screwdriver counterclockwise.
5) After the adjustment, tighten the screw (R)(2.5kgf·cm).

(2) CURVE (B): Linearity decreases toward the exit side.

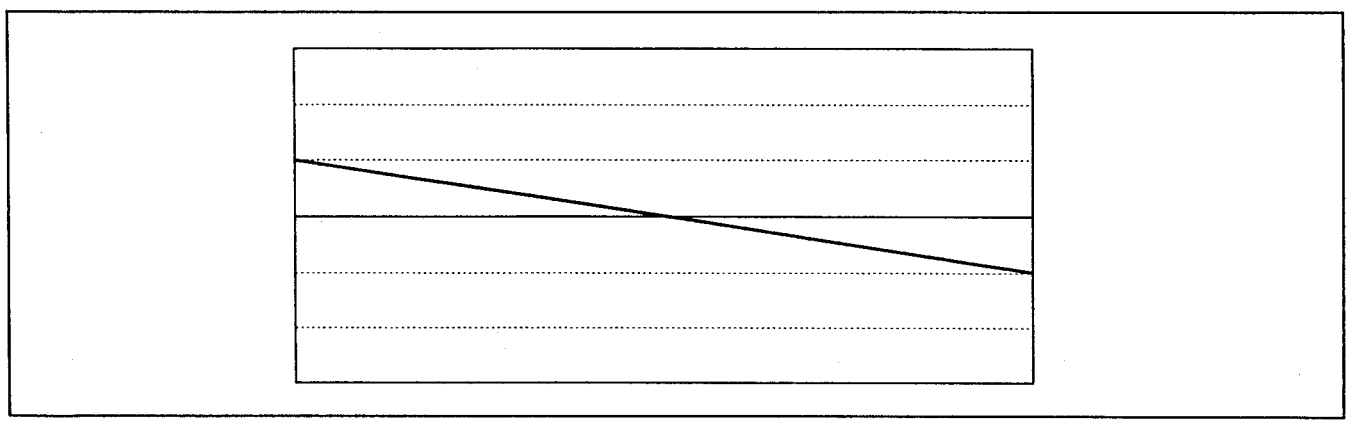

PUSH the Axis toward 0 degrees direction.

1) Remove the screw (R)(refer to Figure 4).
2) Install the Axis Verticality (1) U to position 2 by using attachment hole (E) and (F)(refer to Figure 3).
3) Loosen the screw (L) and insert the fine adjustment screwdriver to the adjustment hole.
4) Adjust the linearity by rotating the screwdriver clockwise.
5) After the adjustment, tighten the screw (L)(2.5kgf·cm).

3) CURVE (C): Linearity decreases to the center portion and then becomes flat toward the exit side.

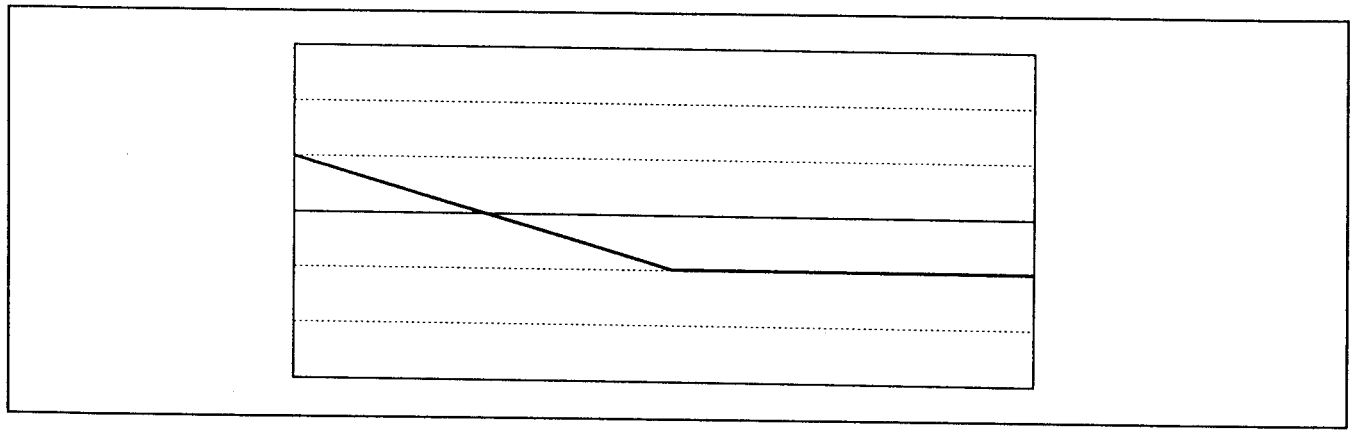

PUSH the Axis toward 300 degrees direction

1) Remove the screw (R)(refer to Figure 4).
2) Install the Axis Verticality (1) U to position 1 by using attachment hole (C) and (D)(refer to Figure 3).
3) Loosen the screw (L) and insert the fine adjustment screwdriver to adjustment hole.
4) Adjust the linearity by rotating the screwdriver clockwise.
5) After the adjustment, tighten the screw (L)(2.5kgf·cm).

A/C HEAD HORIZONTAL POSITION FINE ADJUSTMENT

SPEC	0 ± 2μm (0 ± 3mm on the Tracking display)
MODE	Alignment tape No.2 (color bar shuffling OFF portion)
ADJ.	A/C Head Screw "F" and "G", Hole "J" (Torque 5Kg ± 1Kg)
TOOL	Eccentric Driver (ø2), VFK0358, VFK0878 and VFK0920

1. Insert the Alignment Tape No.2 (color bar shuffling OFF portion).
2. Set the machine condition as follows.
   MANUAL EDIT → F2 INSERT → F12 SET UP → F10 OPT AUTO
3. Press the PLAY button.
4. Confirm that the tracking meter include ± 2μm (±3mm) as shown in Figure.
5. If not, readjust the A/C Head horizontal position.

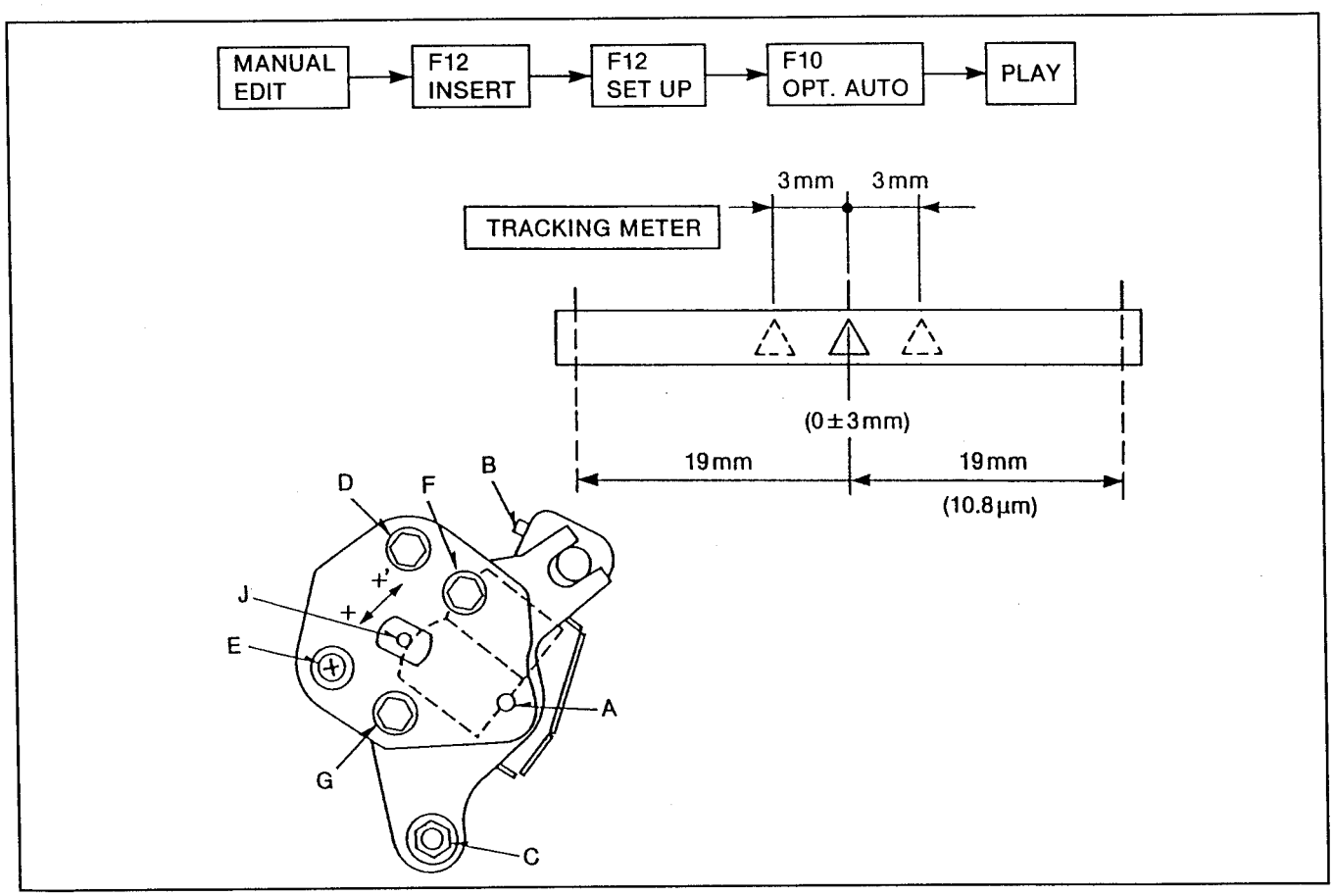

FIANL CONFIRMATION OF TRACKING OPTIMIZE

SPEC	0 ± 2μm (0 ± 3mm on the Tracking Display) (64 ± 11 at Tracking Data Display)
MODE	Alignment tape No.2 (Color Bar Shuffling OFF Portion)
ADJ.	A/C Head Screw "F" and "G", Hole "J"
TOOL	Eccentric Driver (ø2), VFK0358, VFK0878 and VFK0920

After adjusted the A/C Head Horizontal position, please confirm exact position of A/C Head as follows.

1. Set the Service SW 1-4 to ON on the front back panel.
2. Set the VTR to Tracking Data Monitoring mode as follows.
   HOME MENU F8 UB → MANUAL EDIT F2 INSERT → F12 SET UP → F10 OPT ONCE or OPT AUTO
3. During monitoring mode, Tracking data will be appeared at T/C position instead of T/C data as follows.

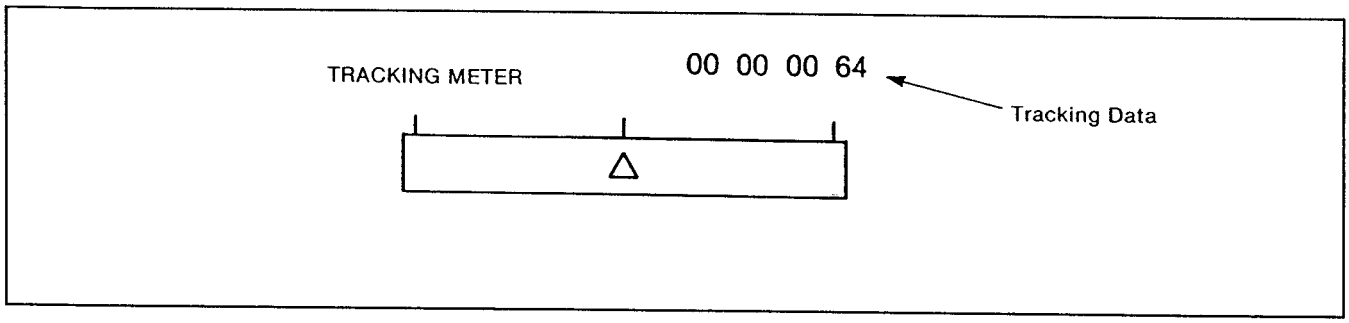

4. Insert the alignment tape No.2 (color bar shuffling OFF)
5. Press READY and PLAY bottom at same time.
6. High Speed Optimizing in progress.
7. After completed, display indicate tracking data as follows.
8. Read the indicated data at T/C position.

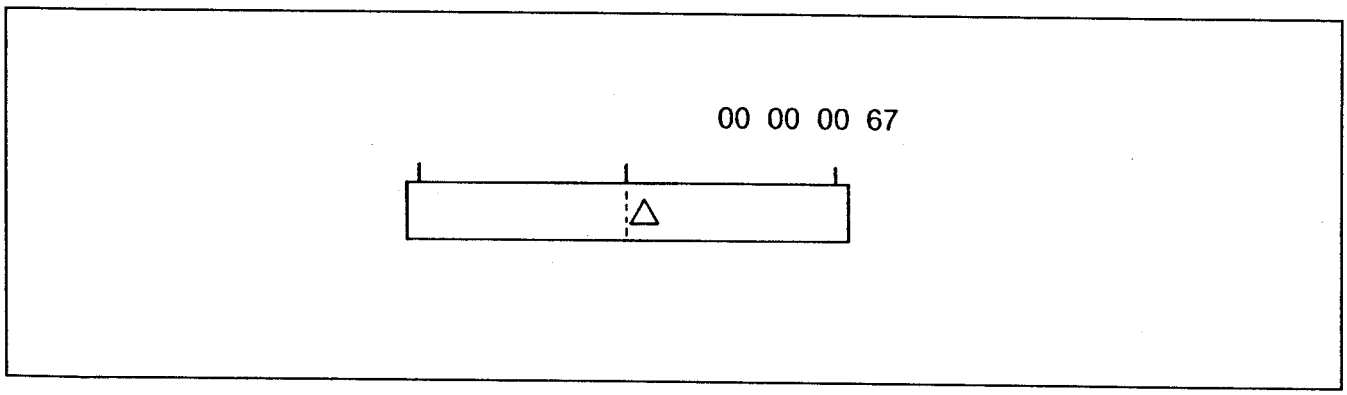

9. Repeat tracking optimize 2 ~ 3 times and get a average data.
10. If out of specification (6 ± 11) readjust A/C Head Horizontal position precisely.

DRUM ELECTRICAL ADJUSTMENT FLOWCHART

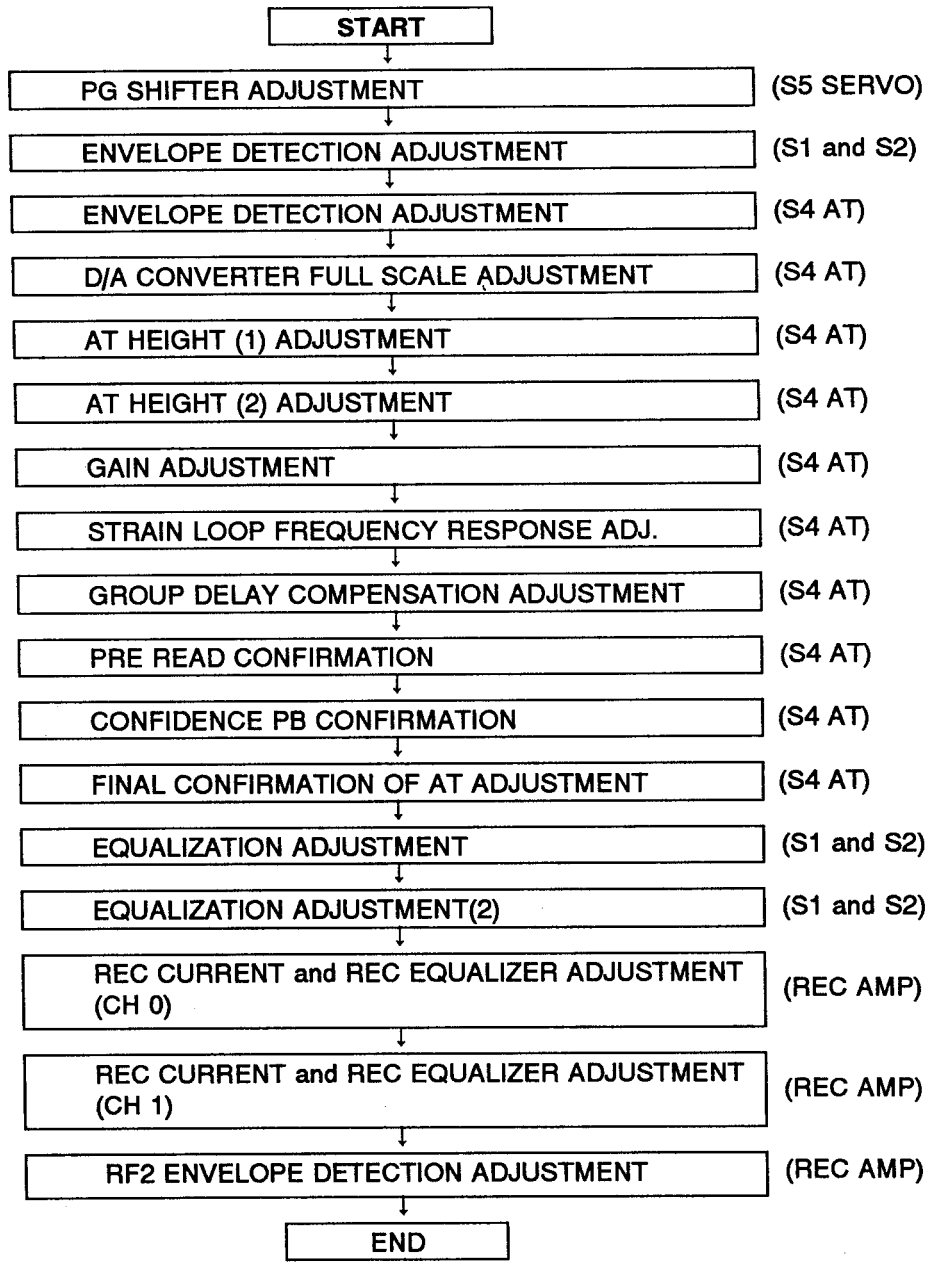

PG SHIFTER ADJUSTMENT (S5:SERVO)

SPEC	T = 27.0 ± 0.5μsec [NTSC] T = 25.5 ± 0.5μsec [PAL]
TEST	TP11 (REC AMP) TP37 (SERVO)
MODE	PLAY
TAPE	75% COLOR BAR PORTION ALIGNMENT TAPE
M.EQ	OSCILLOSCOPE
INPUT	
ADJ.	SW2 (F2), SW3, SW4

<STEP 1>
MENU CONDITION

TEST MENU

Select the TRACKING FIX/VAR F10 to "FIX".

<STEP 2>
1. SCOPE CH1 : TP11 (REC AMP)
   SCOPE CH2 : TP37 (SERVO)
2. SCOPE TRIGGER : CH2
3. Adjust SW2, 3 and 4 so that the period T is as shown in Figure.

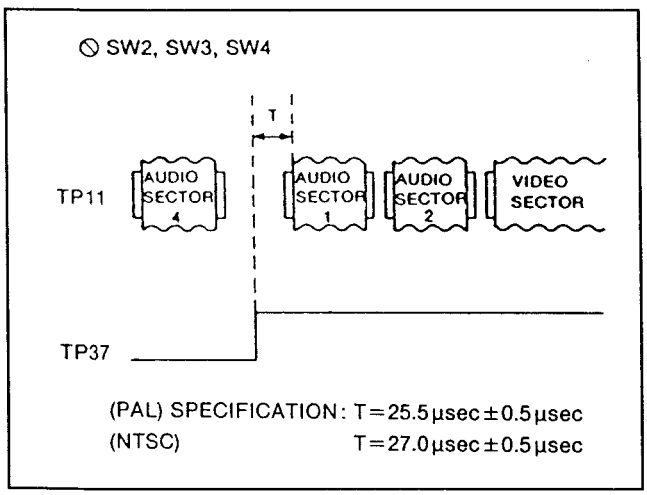

SW2: Fine adjustment
SW3: Pre fine adjustment
SW4: Coarse adjustment

ENVELOPE DETECTION ADJUSTMENT (S1 : REC/PLAY CH0) (S2 : REC/PLAY CH1)

SPEC	ENVELOPE MINIMUM DC LEVEL = 0V±0.2VDC, ENVELOPE MAX.=2Vp-p±0.2V
TEST	TP502 [H4], TP400 [F4], TP8 [E2]
MODE	STILL
TAPE	SHUFFLING OFF 75% COLOR BAR ALIGNMENT TAPE
M.EQ	OSCILLOSCOPE
INPUT	
ADJ.	VR2(A/B GAIN BAL)[H1], VR500 (ENV GAIN)[I4], VR501 (ENV OFFSET) [I4]

5000 SERIES

<STEP 1>
MENU CONDITION

TEST SERVO AT

Set the [PATTERN] to "FIX".

SEARCH = CENTER
PATTERN = FIX

<STEP 2>
1. SCOPE CH1 : TP502
   SCOPE CH2 : TP400
2. SCOPE SETTING : 1V/DC
   SCOPE CH2 : 5V
3. SCOPE MODE : CHOP BW
4. SCOPE TRIG : CH2
5. SCOPE SWEEP : 2ms
6. Place the unit in the STILL mode.
7. Adjust VR501 so that the minimum signal level is 0V ± 0.2V as shown in Figure.

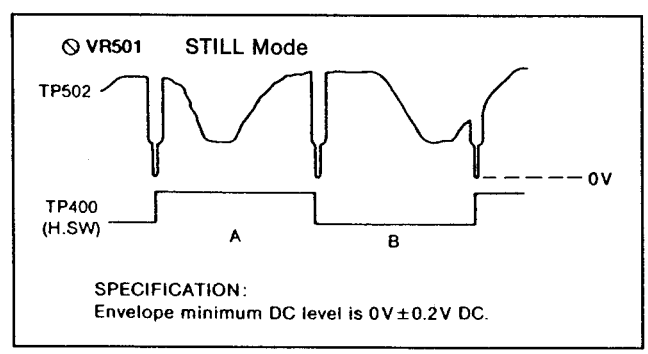

<STEP 3>
1. SCOPE CH1 : TP502
   SCOPE CH2 : TP400
2. Rotate capstan shaft by hand (CCW) and set the Envelope becomes maximum during Head Switch A portion.
3. Adjust VR500 (ENV GAIN) so that the maximum envelope level is 2V ± 0.2V.

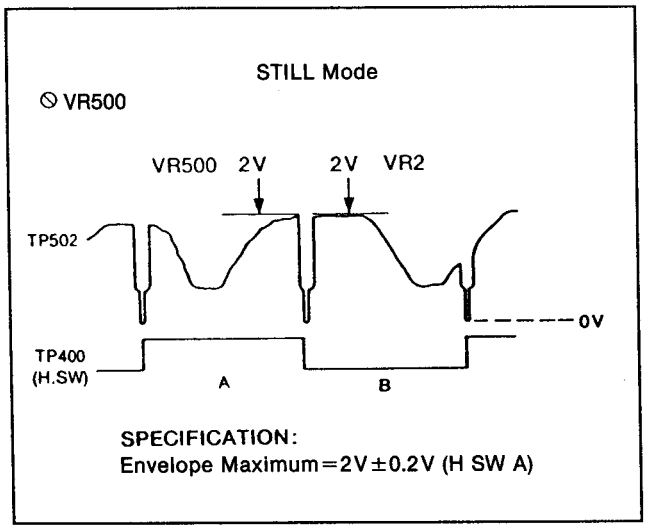

4. Rotate capstan shaft by hand (CCW) and set the Envelope becomes maximum during Head switch B portion.
5. Adjust VR2 (A/B GAIN BAL) so that the maximum envelope is 2V ± 0.2V.
6. After adjustment set the AT HEIGHT is 0.
7. After this adjustment, item 8-1 ENVELOPE DETECTION ADJUSTMENT is required.

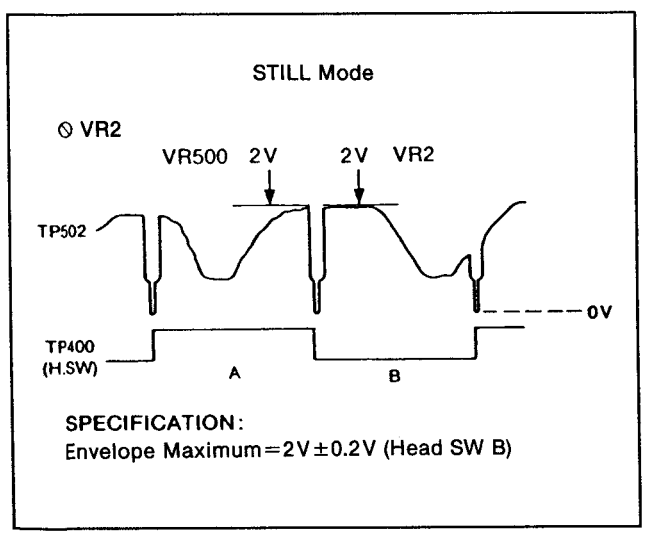

AT (S4) BOARD MACHINE CONDITION

MACHINE CONDITION
1. Disconnect the P523 on the H.A. REGULATOR (S) P.C.B. which is located at right side of the Mechanism.
   while adjustment 8-1 through 8-6.
   Connect P523 from adjustment 8-7.

MENU CONDITION
TEST MENU
↓
AT SERVO TEST MENU

Set the each functions as follow.
1. F4: SEARCH = "CENTER"
2. F5: PATTERN = "ENABLE"
3. F8: AT HEIGHT = Ach "0"
   Bch "0"
4. SW2601 [D2] on S4 board is OPEN.
5. Error correction switches on L3 board are all OFF.
6. Error concealment switch on L4 board is OFF.

ENVELOPE DETECTION ADJUSTMENT (S4 : AT)

SPEC	0.7V ± 0.1VDC, PEAK = +3V ±0.1VDC
TEST	TP2611 (ENV CH1)[D1], TP2612 (ENV
MODE	STOP, EJECT, SW2601 = OPEN, P523 = OFF SEARCH = CENTER, PATTERN = ENEBLE
TAPE	75% COLOR BAR PORTION ALIGNMENT TAPE
M.EQ	OSCILLOSCOPE
INPUT	
ADJ.	VR2601[F2],VR2603[D4],VR2602[F2],VR2604[E4]

<STEP 1>
MENU CONDITION
Refer to the Machine Condition and Menu Condition at the beginning of this SECTION. P523 = OFF

<STEP 2>
1. SCOPE : CH1 TP2611
   SCOPE : CH2 TP2612
2. Set the VTR in EJECT mode.
3. Adjust VR2601 and VR2602 so that the level of waveform is 0.7V ± 0.1 V DC.

<STEP 3>

1. SCOPE : CH1 TP2611
   SCOPE : CH2 TP2612
2. Set the VTR in STOP mode.
3. Rotate the capstan shaft by hand, and set the waveform peak becomes maximum.
4. Adjust VR2603 and VR2604 so that the level of waveform is 3V ± 0.1V DC.
5. Note that VR2601/VR2602/VR2603/VR2604 effect each other.
   Repeat step 2 and 3 and confirm that each adjustment is in specification.

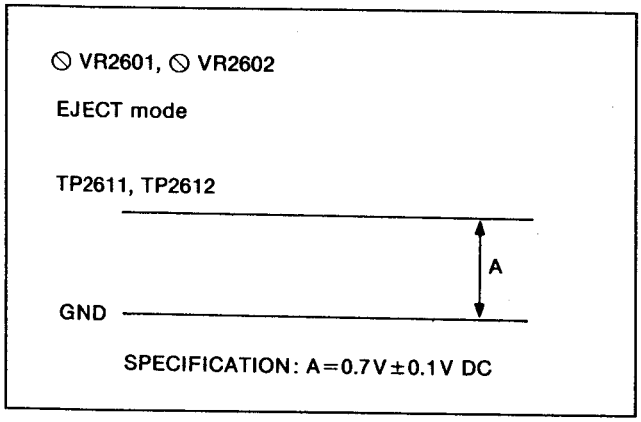

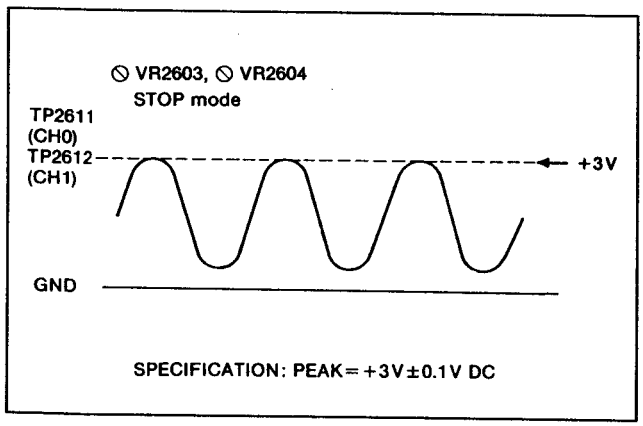

D/A CONVERTER FULL SCALE ADJUSTMENT (S4 : AT)

SPEC	5.0V ± 0.1VDC
TEST	TP2606 [B1], TP2607 [B2]
MODE	EJECT SW2601-OPEN, P523-OFF, SEARCH-CENTER, PATTERN-FIX
TAPE	
M.EQ	OSCILLOSCOPE
INPUT	
ADJ.	VR2613 (DA1FS)[B2], VR2614 (DA2FS)[B2]

<STEP 1>

MACHINE CONDITION

1. Set the VTR in EJECT mode.
2. Set the AT mode to SEARCH = CENTER and PATTERN = FIX in the AT TEST Menu.

<STEP 2>

1. SCOPE CH1 : TP2606
   SCOPE CH2 : TP2607
2. Adjust VR2613 and VR2614 so that the voltage at TP2606 and TP2607 are +5V ± 0.1V DC.
3. Adjust VR2613 and VR2614 so that the difference voltage between TP2606 and TP2607 are within 0.05V.
   If the both voltage at TP2606 and TP2607 are 5.0V DC, then it is OK. If the one of the voltage is 4.9V adjust the other level is same level.
4. Note that the VR2613 and VR2614 effect each other.

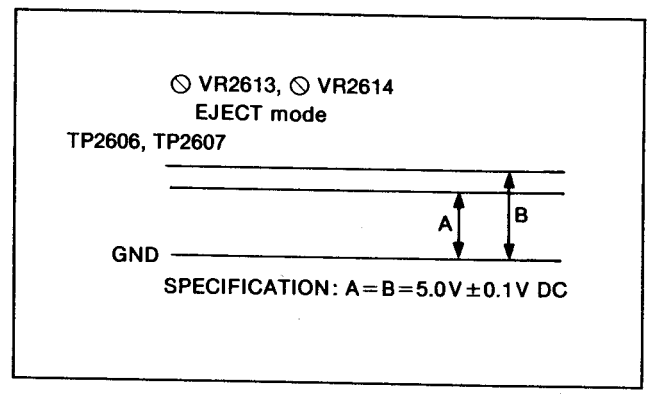

AT HEIGHT (1) ADJUSTMENT (S4 : AT)

SPEC	TP2619 PULSE IS LOCATED AS Shown in figure
TEST	TP2610[F1],TP2619[F1],TP5006[C2],TP5007 (H.A REGULATOR S)[C1] TP2606, TP2607
MODE	VAR×1, SW2601=OPEN, P523-ON, SEARCH=CENTER, PATTERN=ENABLE
TAPE	75% COLOR BAR PORTION ALIGNMENT TAPE
M.EQ	OSCILLOSCOPE
INPUT	
ADJ.	VR2605[F1], VR2606[F1]

<STEP 1>
SCOPE CH1 : TP2610 Segment Pattern
SCOPE CH2 : TP2619 Pulse
SCOPE CH3 : TP5006 Drive Voltage
SCOPE CH4 : TP5007 Drive Voltage

<STEP 2>
1. Field or Frame Still Option (Setup/Home/AT Play)
2. Center/Enable (Test/Servo/AT)
3. SW2601 open
4. Variable X1 Playback
5. 75% Color Bar Alignment tape, shuffling ON
6. Zero the AT Head Heights from the front panel. (Height ON/ BS with F9/left & right cursors, with the front panel knob).

<STEP 3>
1. Initially, adjust the deflection pattern voltages at TP5006 & 5007 are 0 volts DC by VR2605 & VR2606 during VAR X1 playback. This centers the AT heads.
2. Next, fine adjust these pots to achieve three conditions
   A) Proper rising stairstep and pulse timing at TP2610 & 2619. (The stairs are rising from left to right, there are 6 or 8 steps (for NTSC or PAL), and the pulse is aligned with the highest step.
   B) Maximum RF on the 4 "Envelope" bar graphs on the Test/Servo/AT screen.
   C) The segment LED D609 on the AT board should be off.
3. The drive voltage at TP5006 & 5007 will have changed, but they should still be within the range of zero volts, plus or minus fifty volts.
4. Note the voltages at TP5006 & 5007 for use in subsequent adjustments.

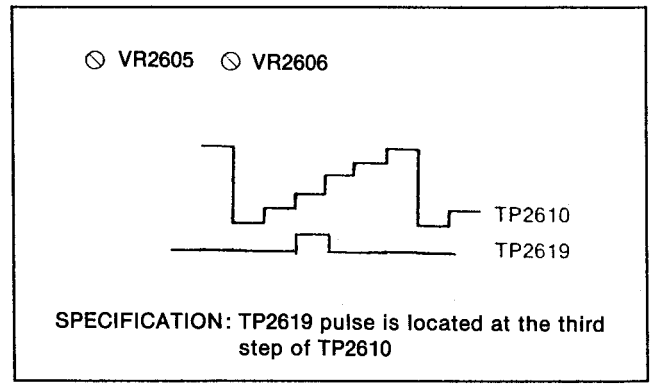

SPECIFICATION: TP2619 pulse is located at the third step of TP2610

(NTSC)

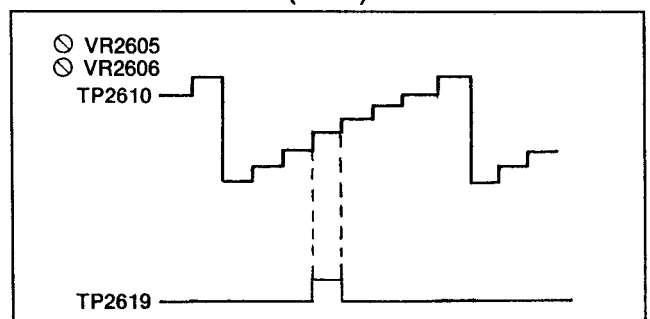

SPECIFICATION: TP2619 pulse is located at the fourth step of TP2610

(PAL)

Note:
1. In this adjustment if output drive voltage waveforms (TP5006 and TP5007) are not flat like a pulse. VR2613 and VR2614 adjustments are required as shown in Figure.
2. Place the unit in VAR × 1 mode.
3. Adjust VR2613 and VR2614 so that the output waveform are flat as shown in Figure.
4. Confirm that the voltage at TP2606 and TP2607 are +5V ± 0.1VDC. (8-3. D/A CONVERTER FULL SCALE ADJUSTMENT)

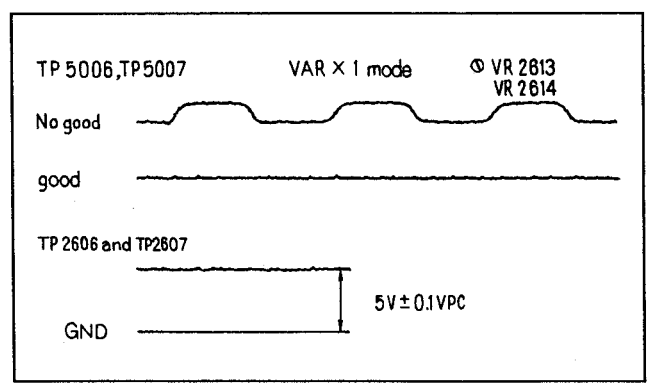

AT HEIGHT (2) ADJUSTMENT (S4 : AT)

SPEC	TP2619 PULSE IS LOCATED AT PEAK OF TP2610
TEST	TP2610[F1],TP2619(TRIGGER)[E1], TP5006[C2],TP5007(H.A REGULATOR S)[C1] TP2629, TP2630
MODE	VAR, SW2601-CLOSE, P523-ON, SEARCH = CENTER, PATTERN= ENABLE
TAPE	75% COLOR BAR PORTION ALIGNMENT TAPE
M.EQ	OSCILLOSCOPE
INPUT	
ADJ.	VR2609(STR OS A)[G1], VR2610(STR OS B)[H1]

This adjustment will be done in the open loop and closed loop modes.

<STEP 1>

OPEN LOOP MODE

1. 75% color bar alignment tape
2. SW2601 OPEN
3. AT menu Screen Options; CENTER/ENABLE
4. Variable X1 playback

<STEP 2>

1. SCOPE CH1 : TP2629
   SCOPE CH2 : TP2630
   (Strain Offset pots)
   VR2609
   VR2610
   (Strain Offset pots)

<STEP 3>

1. Adjust VR2609 &2610 ("STROSA" & "STROSB") for 0 volts at TP2629 & 2630.

CLOSED LOOP MODE

<STEP 4>

1. Close the strain loop with SW2601.
2. Continue in Variable X1 playback.
3. While monitoring TP5006 & 5007, adjust the Strain Offsets VR2609 & 2610 for the voltages noted at in step (8-10).

<STEP 5>

1. Now, fine adjust VR2609 & 2610 for three conditions;
   A). Proper rising stairstep and pulse timing at TP2610 & 2619. (The stairs are rising from left to right, there are 6 or 8 steps (for NTSC or PAL), and the pulse is aligned with the highest step.
   B). Maximum RF on the 4 "envelope" bar graphs on the Test/Servo/AT screen.
   C). Zero volts plus or minus 50 volts at test points 5006 & 5007.

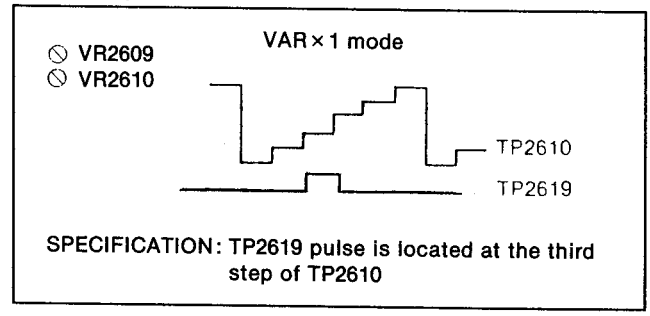

SPECIFICATION: TP2619 pulse is located at the third step of TP2610

(NTSC)

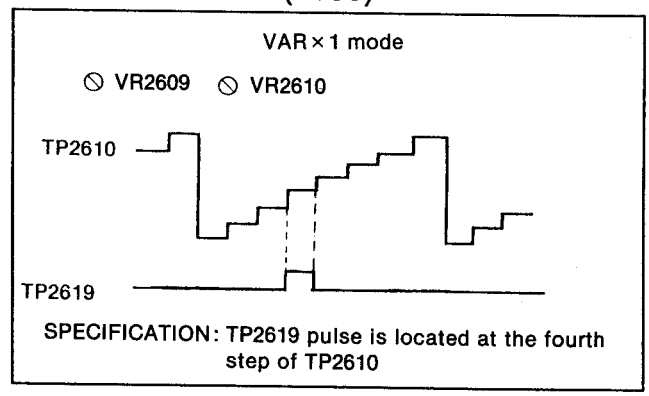

SPECIFICATION: TP2619 pulse is located at the fourth step of TP2610

(PAL)

<STEP 6>

1. Repeat section 8-10, 8-11, until front panel envelope does not change when SW2601 is opened and closed.

GAIN ADJUSTMENT (S4 : AT)

SPEC	REFER TO FIGURE
TEST	TP2611[D1], TP2612[D1], TP2610[F1], TP2619 (TRIGGER [E1] TP5006 [C2],TP5007[C1] TP8 (S1) TP8 (S2) TP207 on REC Amp
MODE	VAR×1, FRAME STILL, SW2601 = CLOSE, H.A REGULATOR, P523 = ON, SEARCH = CENTER, PATTERN = ENABLE
TAPE	75% COLOR BAR PORTION ALIGNMENT TAPE
M.EQ	OSCILLOSCOPE
INPUT	
ADJ.	VR2611[G1], VR2612[H1]

<STEP 1>

1. AT Play "Frame" option on the SET UP/HOME screen or TEST/SERVO/AT screen.
2. CENTER/ENABLE on the Test/Servo/AT screen.
3. 75% color bar tape
4. Place the unit to STILL mode.
5. Set the AT head heights to zero from the front panel.

<STEP 2>

1. SCOPE CH1 : TP2610 Segment Pattern
   SCOPE CH2 : TP2619 Pulse
   VR2611 "STRGNA"
   VR2612 "STRGNB"

<STEP 3>

1. Adjust VR2611 & 2612 for Maximum RF level on the "envelope" bar graphs on the front panel while maintaining the proper timing relationship between the pulse and Segment waveforms, at the third step (NTSC), fourth step (PAL).
2. As a rough check, the voltage in the play mode should be approximately 0 volts at TP5006 & 5007, and the segment LED should be off.

<STEP 4>

1. Next, fine adjust the circuit as follows;
2. AT Play "Frame" on the SETUP/HOME screen or TEST/SERVO/AT screen.
3. CENTER/ENABLE
4. SW2601 CLOSED
5. Variable STILL mode (not play Still).

<STEP 5>

1. SCOPE CH1 : TP8 on the S1 board
   SCOPE CH2 : TP8 on the S2 board
   TP207 for triggering
   (on the REC Amp Board).

2. Fine adjust VR2611 & 2612 for flatness in the detected envelope, and maximum envelope level on the front panel meter.

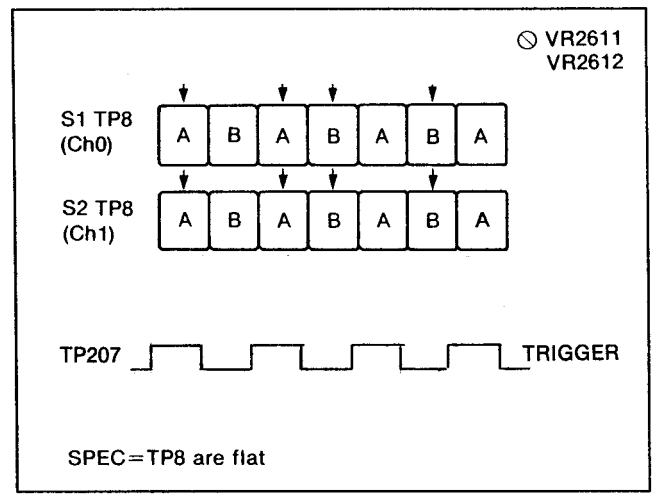

Note:

1. If output waveform of TP8 is not clear, connect the scope to CH1 to TP2611 and CH2 to TP2612 on the AT board.
2. Confirm that output DC level is flat.

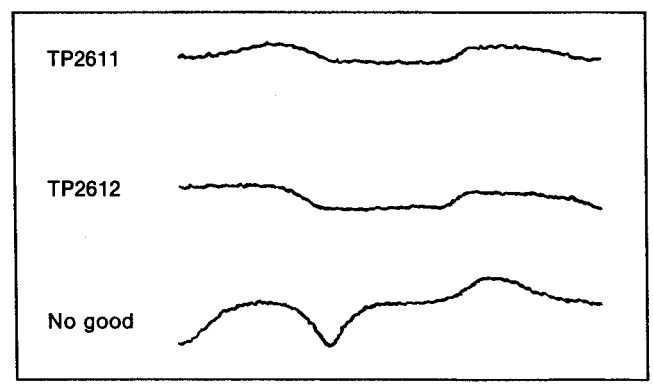

STRAIN LOOP FREQUENCY RESPONSE ADJUSTMENT (S4 : AT)

SPEC	REFER TO FIGURE
TEST	TP2629[G1] --- A CH WFM OUT TP2630[H1] --- B CH (ENVELOPE) TP2619[E1] --- (H SW) TRIGGER,
MODE	VAR X1, -X1, SW2601=CLOSE, SEARCH=CENTER=PATTERN=ENABLE
TAPE	75% COLOR BAR PORTION ALIGNMENT TAPE
M.EQ	OSCILLOSCOPE
INPUT	Composite color bar to VIDEO IN
ADJ.	VR2619(TWN A)[H2], VR2621(LGN A)[H2] - A CH VR2620(TWN B)[H2], VR2622(LGN B)[H2] - B CH

<STEP 1>
1. SCOPE CH1 : WFM OUT (ENV pattern)
   CH2 : TP2619 (TRIG)
2. Set the each VRS as follows.
   VR2619, VR2620 : center position.
   VR2621, VR2622 : fully counterclockwise

<STEP 2>
1. Place the unit to VAR ×1 mode.
2. Set the AT height on the test menu to 1/3 level decrease (off track) from maximum envelope.
3. Slowly turn VR2619 and VR2620 to clockwise until output envelope waving is increase.
4. Adjust VR2619 and VR2620 to counterclockwise so that the output envelope waving is minimum.
5. Confirm that the SEGM lamp is OFF.
6. After confirmation, set the AT HEIGHT to 0.
7. Set the VR2621 and VR2622 to fully clockwise.

Note: Adjust each head (A, B) independently.

<STEP 3>
1. SCOPE CH1 : WFM OUT (ENV pattern)
   CH2 : TP2629, TP2630
   CH3 : TP2619 (TRIG)
2. Place the unit to VAR-X1 and VAR-X3.

<STEP 4>
1. Set the AT height on the test menu to 1/3 level decrease (off track) from maximum envelope.
2. Adjust VR2621 and VR2622 so that the droop of entrance side of output envelope is same level between a and b.

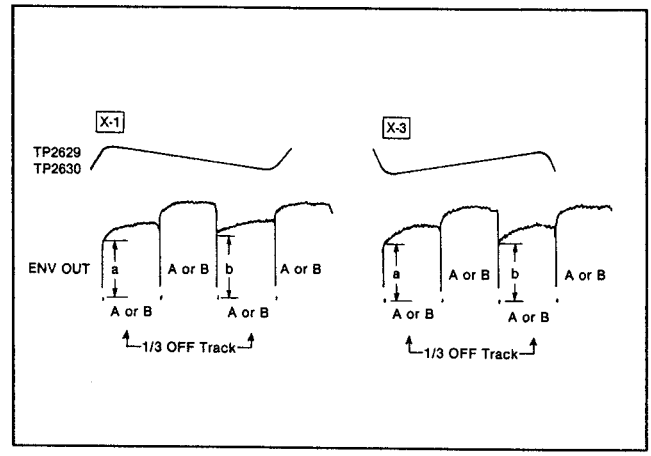

<STEP 5>
1. Confirm that the SEGM lamp is OFF.
2. After confirmation, set the AT HEIGHT to 0.

Note: Adjust each head (A, B) independently.

GROUP DELAY COMPENSATION ADJUSTMENT (S4 : AT)

SPEC	REFER TO FIGURE
TEST	TP8[E2]→S1, TP8[E2]→S2, TP631[H2]→S4 TP632[I3] → S4
MODE	VAR × -1, × 3 → VAR ×1 ~ ×-3
TAPE	75% COLOR BAR PORTION ALIGNMENT TAPE
M.EQ	OSCILLOSCOPE
INPUT	
ADJ.	VR2617[D1], VR2618[E1]

<STEP 1>

1. AT Play Frame or Field.
2. SCOPE CH1 : TP8 on the S1 board.
   SCOPE CH2 : TP8 on the S2 board.
   SCOPE CH3 : TP2631
   SCOPE CH4 : TP2632
3. Use the knob to activate the variable times 3 and variable times -1 modes, alternately.

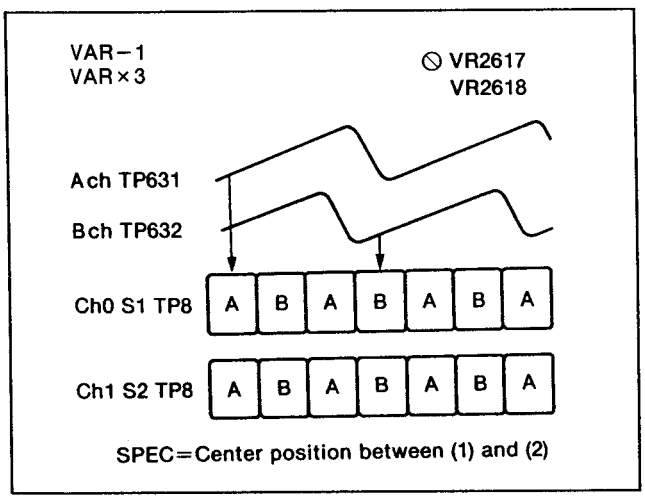

4. Confirm that the output waveform is flat as shown in figure.
5. If it is not, adjust VR2617 and VR2618.

PRE READ CONFIRMATION (S4 : AT)

SPEC	REFER TO FIGURE
TEST	TP2610[F1], TP2619[E1]
MODE	EDIT PLAY, SW2601-CLOSE, P523-ON AT TEST = NORMAL, PRE READ MODE
TAPE	75% COLOR BAR PORTION ALIGNMENT TAPE
M.EQ	OSCILLOSCOPE
INPUT	
ADJ.	CONFIRMATION ONLY

<STEP 1>

SCOPE CH1 : TP2610
SCOPE CH2 : TP2619

<STEP 2>

1. Set preread mode as follows.

   HOME MENU → F + F8 (PRE READ ON) →
   MANUAL EDIT MENU → F2 INSERT

2. Playback the alignment tape.

<STEP 3>

Confirm the pulse at TP2619 is located at 4TH (PAL), 3RD (NTSC) steps of TP2610 as shown below.

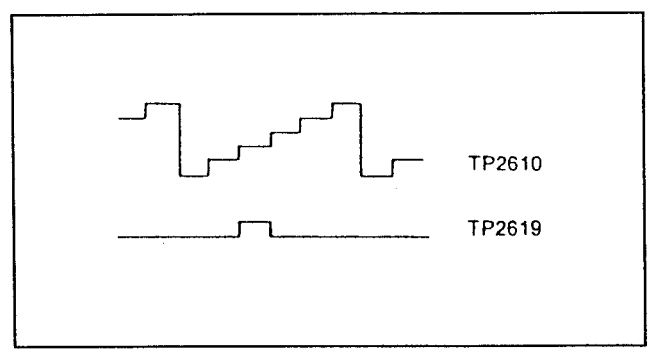

(NTSC)

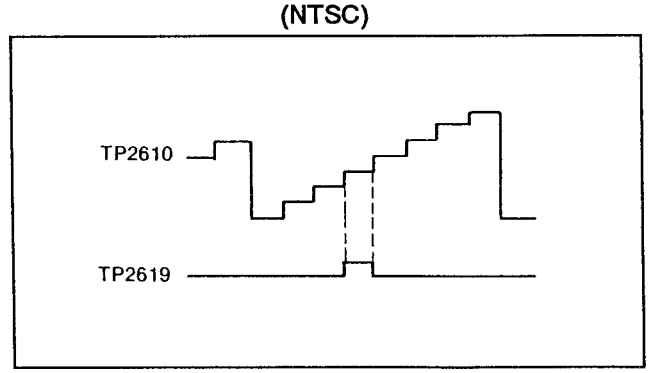

(PAL)

CONFIDENCE PB CONFIRMATION (S4 : AT)

SPEC	REFER TO FIGURE
TEST	TP2610[F1], TP2619[E1]
MODE	CONFIDENCE PB HOME MODE, SW2601 = CLOSE
TAPE	BLANK TAPE
M.EQ	OSCILLOSCOPE
INPUT	
ADJ.	CONFIRMATION ONLY

<STEP 1>
SCOPE CH1 : TP2610
SCOPE CH2 : TP2619

<STEP 2>
Confirm the pulse at TP2619 is located at first (NTSC) or Second (PAL) steps of TP2610 as shown below.

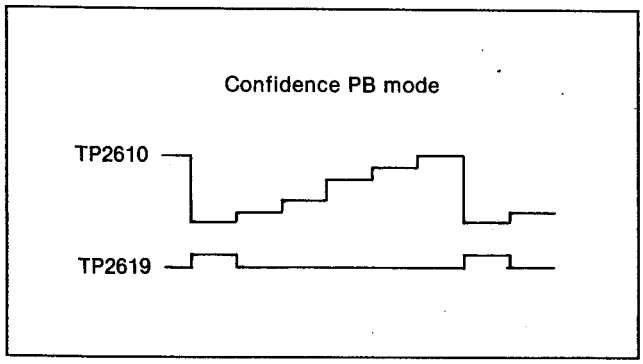

NTSC

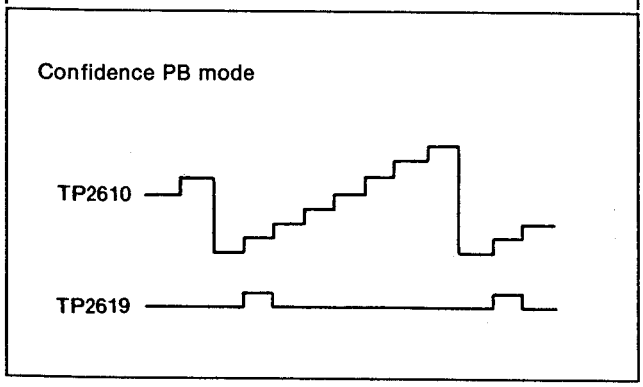

PAL

FINAL CONFIRMATION OF AT ADJUSTMNET

SPEC	TP2619 PULSE IS LOCATED AS SHWON IN FIGURE
TEST	TP2611[D1], TP2612[D1], TP2610[F1], TP2619(TRIGGER)[E1], TP5006, TP5007 (H.A REGULATOR)
MODE	VAR, FRAME STILL, SW2601 = CLOSE, P523 = ON SEARCH = CENTER, PATTERN = ENABLE
TAPE	75% COLOR BAR POSITION ALIGNMENT TAPE
M.EQ	OSCILLOSCOPE
INPUT	
ADJ.	VR2609 (STR OS A),VR2610 (STR OS B)[H1] VR2611[G1], VR2612[H1]

<STEP 1>
MACHINE CONDITION
1. VAR X1, P523 = ON, SW2601 = CLOSE
2. Set the AT mode, SEARCH = CENTER, PATTERN = ENABLE
3. Set the AT HEIGHT on the front panel, both A CH and B CH are 0.

<STEP 2>
1. SCOPE CH1 : TP2610
   CH2 : TP2619
   CH3 : TP5006
   (H.A REGULATOR Board)
   CH4 : TP5007
   (H.A REGULRATOR Board)
2. Confirm the waveform is as shown in Figure. If it is not, adjust VR2609 and VR2610.
3. Confirm that the DC voltage is 0 ± 50V DC.
4. Confirm that the envelope output is maximum on the front display.
5. If it is not Readjust VR2609 and VR2610. (Refer to item 8-11 AT HEIGHT (2) ADJUSTMENT)

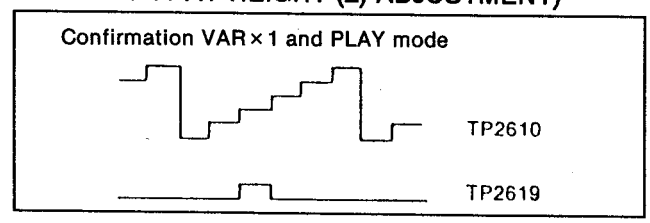

(NTSC)

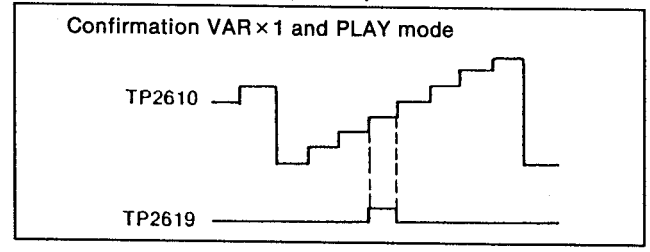

(PAL)

<STEP 3>
1. Set the AT mode to NORMAL (F1).
2. Place the unit in the PLAY mode.
3. Confirm the waveform is as shown in figure.

<STEP 4>
1. Place the unit in the Recording mode.
2. Confirm the waveform is as shown in figure.

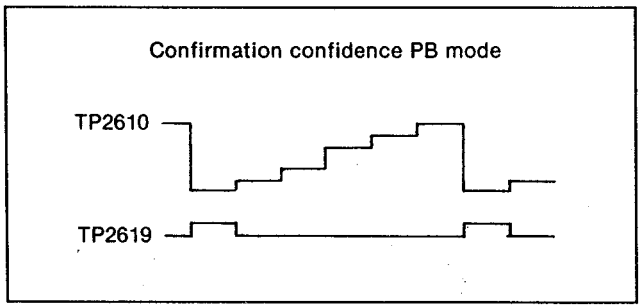

(NTSC)

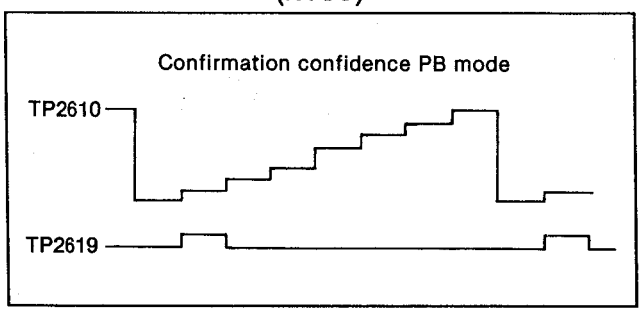

(PAL)

3. If it is not, readjust VR2609 and VR2610. (Refer to item 8-11 AT HEIGHT (2) adjustment)

Note: If the segment steps is matched the pulse and segment, Segment LED is OFF.

<STEP 5>
1. SCOPE CH1 : TP8(S1) on the Equalizer Board.
   SCOPE CH2 : TP8(S2) on the Equalizer Board.
   SCOPE CH3 : TP37(S5) on the SERVO Board. (for trigger)
2. Confirm that the envelope is flat from VAR X-1 to VAR X3. And check the CH A and CH B envelope output balance.

Note: If the envelope drop off at entrance side and exit side, in this case re-check the tape pass linearity. (Refer to P3 or P6 Height adjustment)

3. If it is not, readjust VR2611 and VR2612 (Refer to item 8-15 GAIN adjustment).

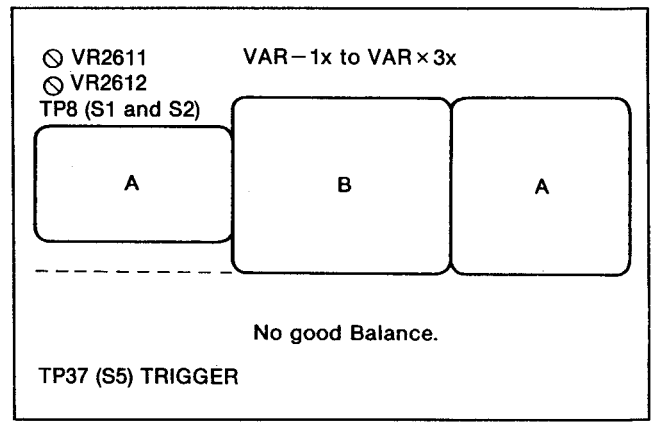

8-12 GAIN ADJUSTMENT

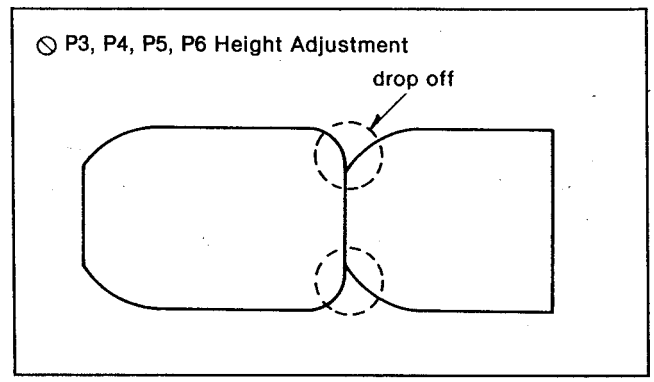

EQUALIZER CH0 (S1) BOARD
EQUALIZER CH1 (S2) BOARD

Adjustment procedures of S1 and S2 are same, so both boards adjustment procedures are explained together.

Set The SW51 Line and Field shuffle on the L2 board to OFF as shown in Figure 1.

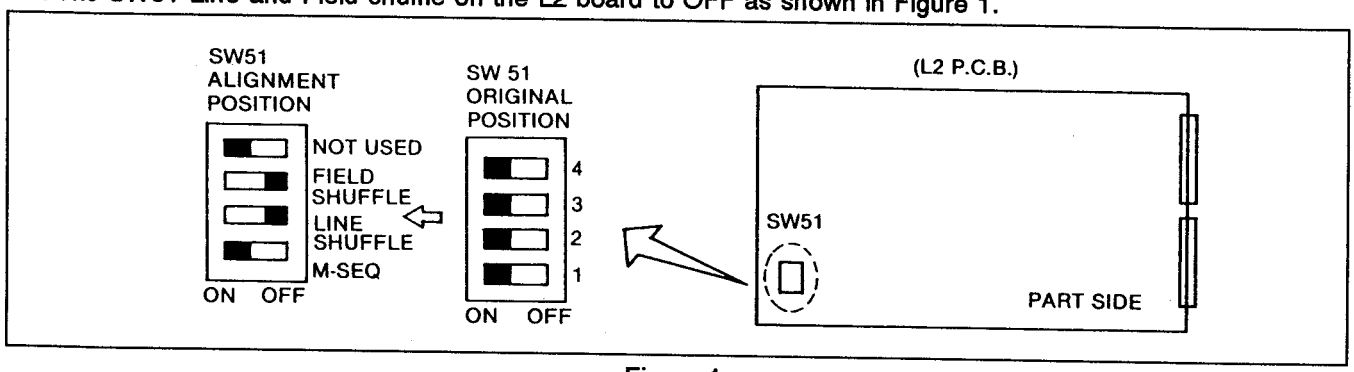

Figure 1.

1. Set the SW1, 2, 3 and 4 on the L3 P.C.B. follow the Figure 2.
2. Set the SW802 on the L4 P.C.B. follow the Figure 2.
3. Confirm that the 3 LED's are turned ON.

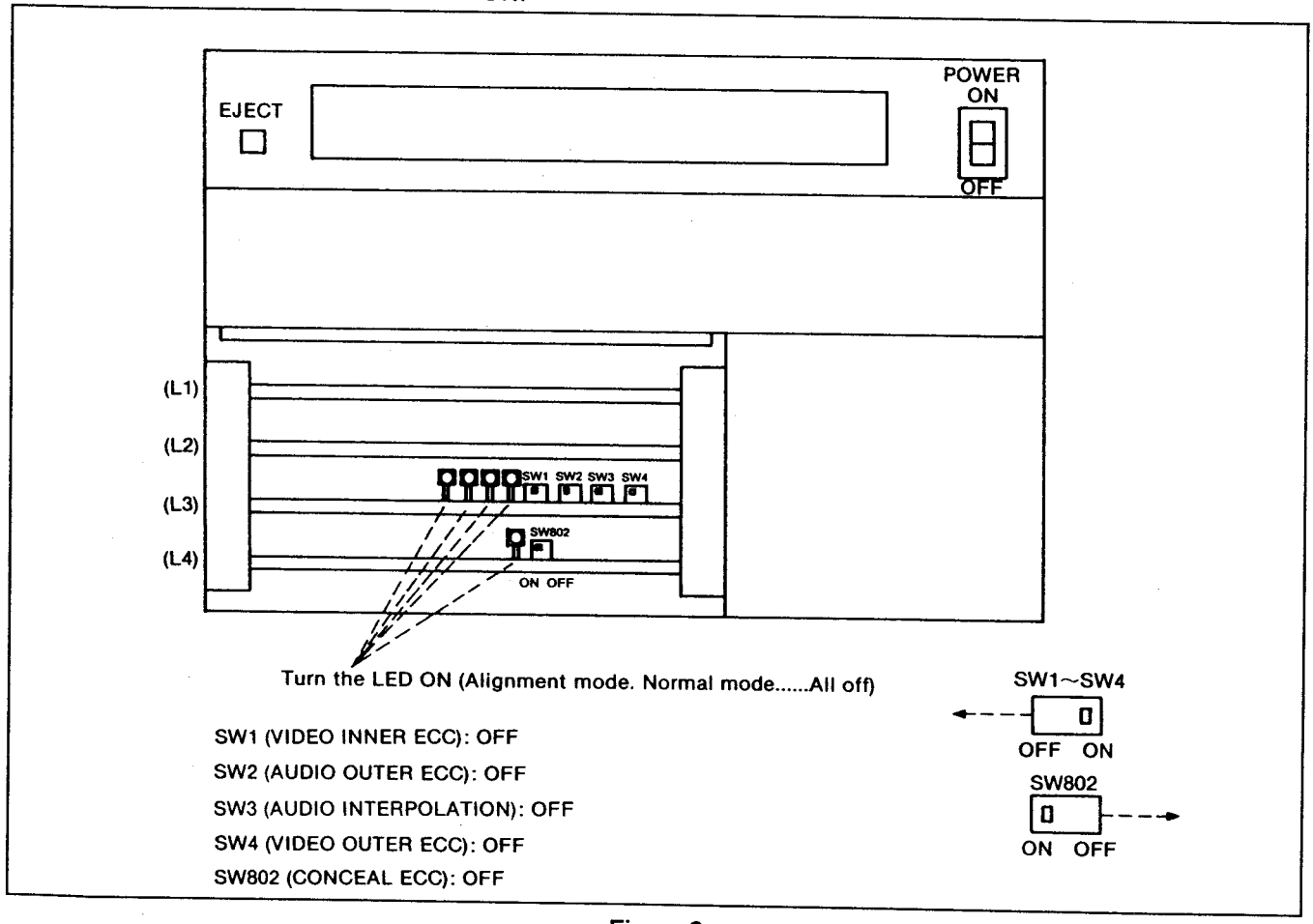

Figure 2

EQUALIZATION ADJUSTMENT (1)
(S1 : REC/PLAY CH0)
(S2 : REC/PLAY CH1)

Factory Preset only, skip this item after Head Replacement.

SPEC	
TEST	TP8[E2], VIDEO OUT, TP400[F4]
MODE	VAR (× 1)
TAPE	SHUFFLING OFF 75% COLOR BAR ALIGNMENT TAPE
M.EQ	SPECTRUM ANALYZER
INPUT	
ADJ.	See Below

5000 SERIES

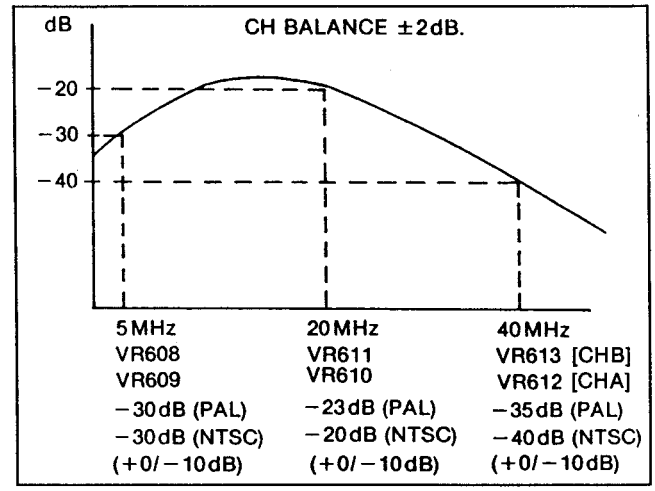

<STEP 1>

Adjustment VR.

(1) VR3 (PHASE SHIFT) -------6 division
(2) VR609 (MAG A) ----------7 division
VR608 (MAG B) ----------7 division
(3) VR613 (AFC HA) ----------5 division
VR612 (AFC HB) ----------5 division
(4) VR611 (AFC MA) ----------2 division
VR610 (AFC MB) ----------2 division

<STEP 2>

1. Set the spectrum analyzer to REG 4 mode.

REG 4 mode

ITEM	PARAMETER	
(1)	REF LEVEL	-10.0dBm
(2)	ATTEN	10dB
(3)	DIV (dB/DIV)	5dB/div
(4)	START FREQUENCY	0MHz
(5)	STOP FREQUENCY	50MHz
(6)	RES BW	1MHz
(7)	VIDEO BW	3kHz
(8)	SWEEP TIME	300msec
(9)	TRIGGER	EXT (HEAD SW)
(10)	VID AVG	10

<STEP 3>

EQUALIZER COARSE ADJUSTMENT

1. Connect the spectrum analyzer to TP8.
2. Connect the EXT Trigger input of the spectrum analyzer to TP400 (HEAD SW).
3. Adjust VR609 (MAG A) and VR608 (MAG B) so that the gain is -30dB +0/-10dB at 5MHz portion.
4. Adjust VR613 (AFC HA) and VR612 (AFC HB) so that the gain is -35dB +0/-10dB at 40MHz portion.
5. Adjust VR611 (AFC MA) and VR610 (AFC MB) so that the gain is -23dB +0/-10dB at 20MHz portion.

Note: If still out of specification.
Just adjust as A curve as shown in Figure.
And then carry on next the adjustment.

EQUALIZATION ADJUSTMENT (2)
(S1 : REC/PLAY CH0)
(S2 : REC/PLAY CH1)

SPEC	MINIMUM ERROR RATE
TEST	TV MONITOR, FRONT ERROR DISPLAY
MODE	VAR (× 1)
TAPE	SHUFFLING OFF 75% COLOR BAR ALIGNMENT
M.EQ	SPECTRUM ANALYZER
INPUT	
ADJ.	VR611 (AFC MA)[F1], VR610 (AFC MB)[F1], VR613 (AFC HA)[E1], VR612 (AFC HB)[E1], VR10 (COMP BIAS LEVEL)[F1], VC301 (PHASE ADJ)[A2], VC1 (RESON A)[G2], VC2 (RESON B)[G2], VR3 (PHASE SHIFT)[I2] VR608(MAG B), VR609(MAG A), [D1] VR11 (AUTO EQ IN LEVEL) [E1] VR12 (AFC MATCH) [F4]

~~5000 SERIES~~

[RF SECTION]

<STEP 1>

1. Use the "75% Color Bars Shuffle OFF" tape.
2. Search = "CENTER"
   Maximize the envelope bar graphs on the front panel by adjusting the AT heights in the SUPER USER Menu.
3. Choose "PB mode : ch0" on the SUPER USER MENU when adjusting the Equalizer CH0 board, and "PB mode : ch1" for the CH1 board at the same time video output picture must be stable.
4. Center VC1/VC2.
5. Use VR3/VR10/VC301 to minimize errors (speckling) on the picture monitor. Continue adjusting these three pots until no further improvement is possible.
6. Use VC1, VC2 & VR3 to further reduce the errors.
7. Use VC1, VC2 & VR10 in the same manner.
8. Adjust VC301 to minimize screen errors and adjust VR12 to minimize screen errors.
9. Change the ECC Sample on the TEST/RF Menu to fast
10. Memorize the spectrum waveform on TP8 into the "B" memory of the HP8591A Spectrum Analyzer.
11. Next adjust VR613 & 611 to reduce the error rate further. Turn VR613 very slightly in the direction which reduces the INNER ERROR RATE in the "CH0 A" bar graph. Then adjust VR611 very slightly in the opposite direction CCW to reduce the error further. Continue this alternate adjustment of the pots until no more improvement is possible.
12. Repeat this same adjustment technique starting with VR612 and following with VR610, in order to minimize the INNER ERROR RATE on the "CH0 B" bar graph.
13. Recall the previously memorized waveform in the Spectrum Analyzer "B" memory, and compare it to the waveform now present on TP8. If the two waveforms aren't similar in appearance, adjust the two pairs of pots 613/611 (CHA) & 612/610 (CHB) in the manner described above, for minimum error rate for both heads, and similar spectrum waveshapes.
14. Adjust VR608 & 609 to minimize the "sawtooth" appearance of the spectrum waveform at the 5Mhz end.
15. Adjust VR10 & VC301 to further reduce the Inner Error Rate.

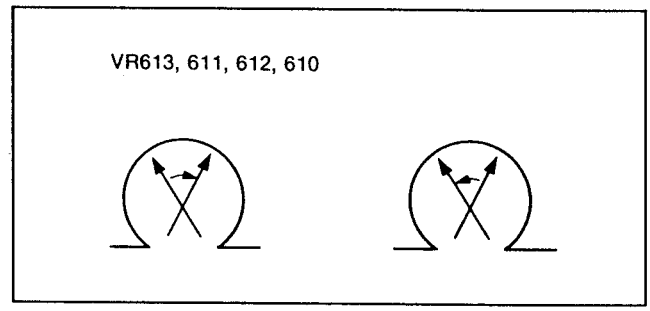

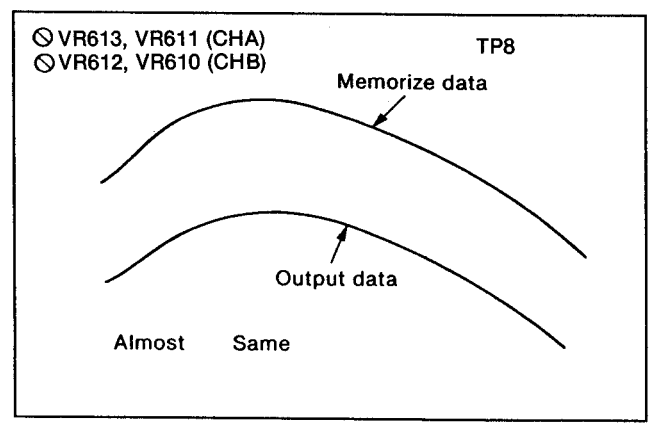

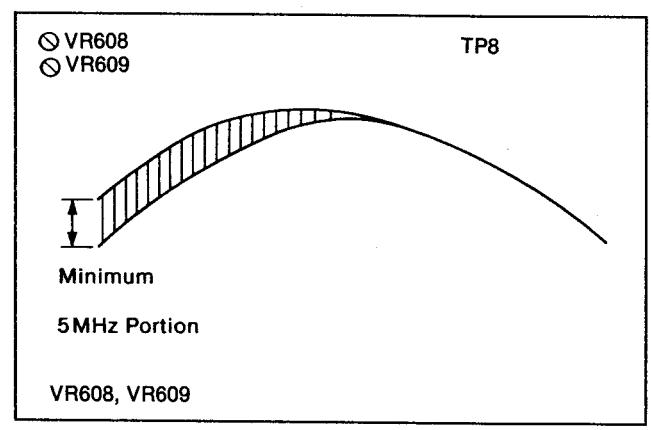

16. Confirm the error rate is less than 10-4 (scale 3).

⊘ CONFIRMATION

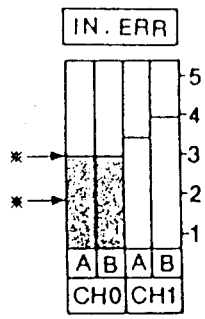

TYPICAL VALUE: Error rate is less than scale 3.

Note: After equalization adjustment, RF envelope output level adjustment is required as follows.

1. Connect the scope to TP8 and place the unit in PLAY mode.
2. Adjust VR608 abd VR609 so that the output envelope is 400mVp-p. (50Ω terminated).
3. Connect the scope to WFM out and adjust VR11 so that the output envelope is 200mVp-p (75Ω terminated).

REC CURRENT and REC EQUALIZER ADJUSTMENT (CH0)(REC AMP)

SPEC	REFER TO FIGURE
TEST	TP8 (S1 BOARD), TP207 (REC AMP BOARD) → EXT IN
MODE	PLAY → REC
TAPE	75% COLOR BAR ALIGNMENT TAPE SELF RECORDING TAPE
M.EQ	SPECTRUM ANALYZER, 50Ω PROBE WITH CLIP
INPUT	SHUFFLING OFF 75% COLOR BAR ALIGNMENT TAPE
ADJ.	FRONT PANEL REC CURRENT (S MENU) VR2 (CH0 A FREQ), VR4 (CH0 B FREQ)

<STEP 1>
Set the spectrum analyzer as follows.
(REG 4)

REFERENCE LEVEL	:	-10.0dBm
ATTEN	:	10dB
DIV (dB/DIV)	:	5dB/div
START FREQUENCY	:	0Hz
STOP FREQUENCY	:	50MHz
RES BW	:	1MHz
VIDEO BW	:	3kHz
SWEEP TIME	:	300m sec
TRIGGER	:	EXT(HEAD SW)

<STEP 2>
Set the VTR shuffling off, error correction off and error concealment off mode.

L2 SW51-2 (OFF), SW51-3 (OFF)
L3 SW1 (OFF), SW2 (OFF), SW3 (OFF), SW4 (OFF)
L4 SW802 (OFF)

<STEP 3>
1. Connect the spectrum analyzer probe to TP8 on S1 Board.
2. Playback a Shuffling off 75% color bar alignment tape.

<STEP 4>
1. SCOPE CH1 : TP2610 (S4)
   SCOPE CH2 : TP2619 (S4)
2. Set the machine condition as follows.
   VIDEO OUT → SET UP → STATE →
   [ ](CURSOR CENTER)
   [→] → [→] → [→](EDIT REC) → TAPE →
   MANUAL EDIT → INSERT
3. Set the VTR PLAY mode.
4. Confirm that the waveform is shown below and the envelope level on the front panel bar graph becomes maximum.
   If not, adjust Front Panel adjustment knob so that the these two conditions will be satisfied.
   TEST → SERVO → AT → F4(CENTER) → EXIT → EXIT RF → AT HEIGHT (F7) → BS+F8 → [ ](CURSOR CENTER) → F+[←]
   A and B Heads are selected by cusor key [←] [→].

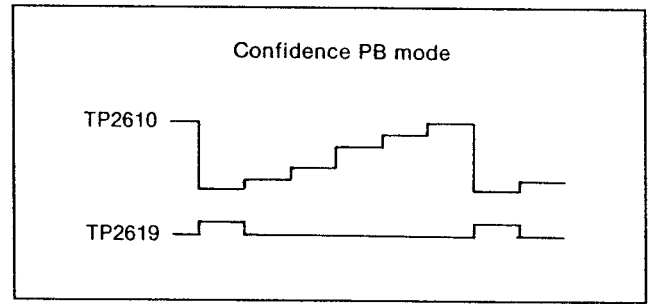

(NTSC)

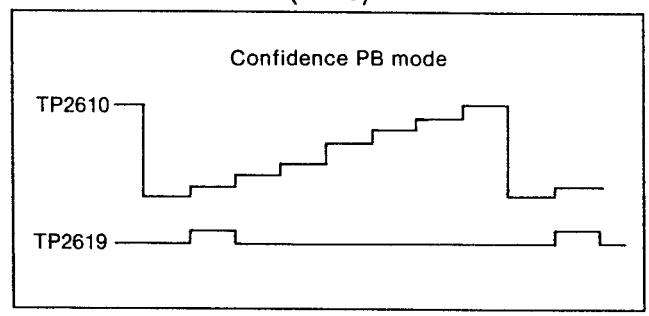

(PAL)

Note: This AT HEIGHT adjustment is tentative adjustment to get maximum envelope in correct AT Trace. Actual AT Adjustment must be done in AT (S4) Adjustment.

<STEP 5>
1. Memorize the frequency characteristics waveform to VIEW B of the spectrum analyzer.
2. Set the machine condition as follows.
   MANUAL EDIT → INSERT(INSERT OFF mode).

Note: STEP 4 and 5 place the AT Heads in the confidence position, when in Playback mode. The frequency characteristics can then be memorized and compared to the Rec frequency characteristics.

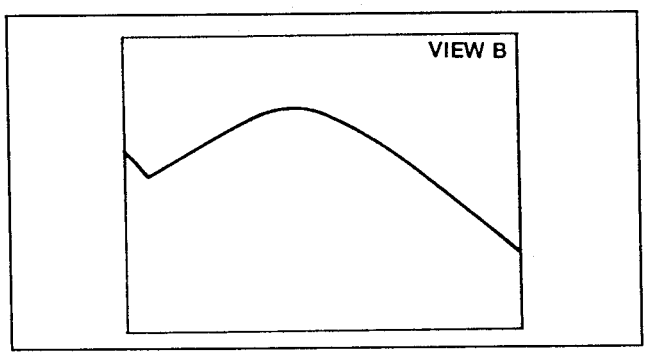

<STEP 6>
1. Eject the alignment tape and insert a self recording tape.
2. Connect the spectrum analyzer probe to TP8 on S1 Board.
3. Set the VTR in Rec mode.
4. Make sure that the AT Head height is correct position to get maximum envelope on CH0 display.
5. Set the FRONT MENU to REC CURRENT mode.
   TEST → RF → F4(REC CURRENT) → BS+F8 → [ ] (CURSOR CENTER) → F+[←]
   CH0 A, CH0 B, CH1 A, CH1 B Heads are selected by cursor key [↑] [↓].
6. Confirm that envelope on the bar graph is still keeping maximum level. If not, back to AT-HEIGHT adjusting menu and readjust Front Panel adjusting knob to get maximum level of envelope.
7. Set spectrum analyzer to REG 5. (refer to set up chart).

<STEP 7>
Adjust the REC Current CH0 A and CH0 B so that the waveform level is same level with the alignment tape play level at 5MHz.

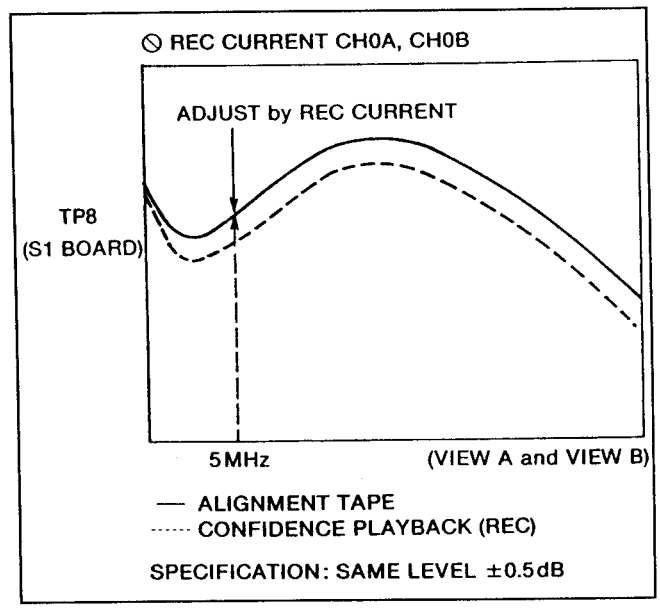

<STEP 8>
1. CH0B Rec Current Adjustment is same as CH0A which is described STEP 6-3 ~ STEP 7. (Just change the CH).

<STEP 9>
1. Adjust VR2 (CH0 A) and VR4 (CH0 B) so that the waveform level is same at 30MHZ as shown below and confirm that the error rate on the front panel is minimum.
2. If it is not, set the CH0 B to -128 by using adjustment VR on the front panel. And adjust VR2 (CH0 A) so that the error rate is minimum and same level.
3. Adjust VR4 (CH0 B) so that the error rate is minimum by using the same method above.

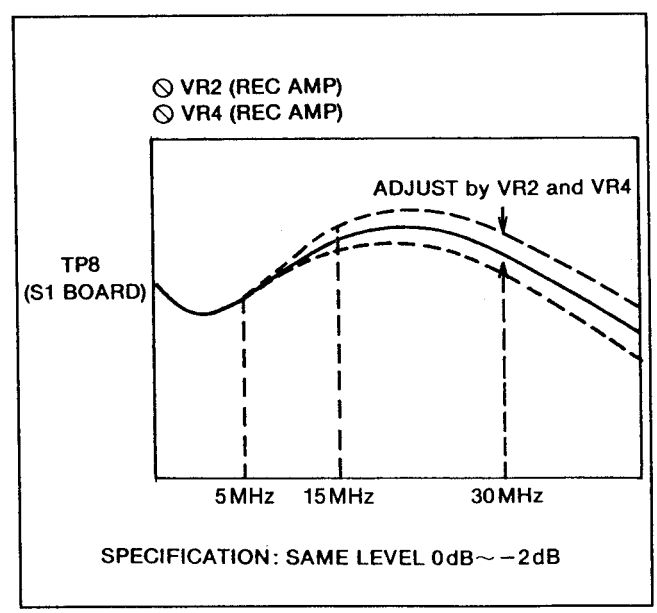

<STEP 10>

1. If level is increased at 30MHz to 35MHz, adjust REC CURRENT CH0 A and CH0 B so that the output level at 5MHz is same level. (A:0).
2. If the level is increased at 5MHz, adjust REC CURRENT CH0 A and CH0 B so that the output level at 5MHz is same increasing value. (a:c).

Caution: Adjustment point of VR2 and VR4 are as shown below.

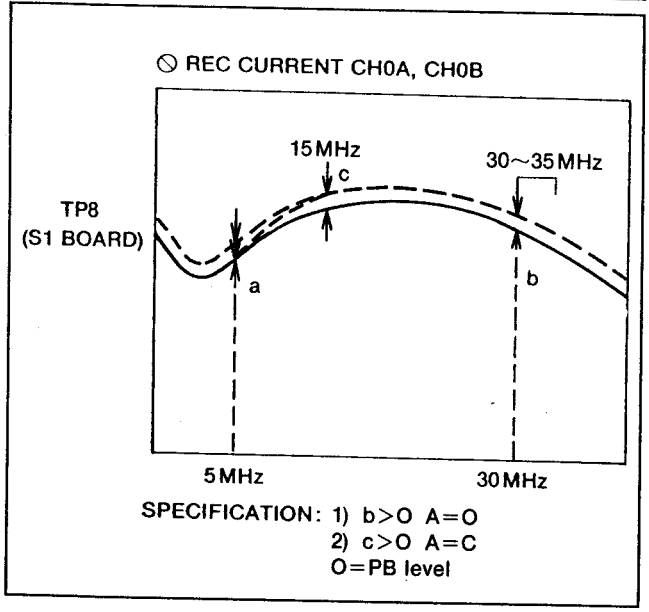

<STEP 11>

1. Set the machine condition as follows.
   VIDEO OUT → SET UP → STATE → [ ]
   (CURSOR CENTER)
   [→] → [→] → [→](EDIT REC) → TAPE →
   MANUAL EDIT → INSERT
2. Set the VTR PLAY mode.
3. Confirm that the waveform level is same and error rate is minimum.

<STEP 12>

Set the AT HEIGHT Front Menu to all 0.

REC CURRENT and REC EQUALIZER ADJUSTMENT (CH1)(REC AMP)

SPEC	REFER TO FIGURE
TEST	TP8(S2 BOARD), TP207(S2 BOARD) → EXT IN
MODE	PLAY → REC
TAPE	75% COLOR BAR ALIGNMENT TAPE SELF RECORDING TAPE
M.EQ	SPECTRUM ANALYZER, 50Ω PROBE WITH CLIP
INPUT	SHUFFLING OFF 75% COLOR BARALIGNMENT TAPE
ADJ.	FRONT PANEL REC CURRENT (SP MENU) VR7 (CH1 A FREQ), VR9 (CH1 B FREQ)

<STEP 1>

Set the spectrum analyzer as follows.
(REG 4)

REFERENCE LEVEL	:	-10.0dBm
ATTEN	:	10dB
DIV (dB/DIV)	:	5dB/div
START FREQUENCY	:	0Hz
STOP FREQUENCY	:	50MHz
RES BW	:	1MHz
VIDEO BW	:	3kHz
SWEEP TIME	:	300m sec
TRIGGER	:	EXT (HEAD SW)

<STEP 2>

Set the VTR shuffling off, error correction off and error concealment off mode.

- L2 SW51-2 (OFF), SW51-3 (OFF)
- L3 SW1 (OFF), SW2 (OFF), SW3 (OFF), SW4 (OFF)
- L4 SW802 (OFF)

<STEP 3>

1. Connect the spectrum analyzer probe to TP8 on S2 Board.
2. Playback a Shuffling off 75% color bar alignment tape.

<STEP 4>

1. SCOPE CH1 : TP2610 (S4)
   SCOPE CH2 : TP2619 (S4)
2. Set the machine condition as follows.
   (This setting is for the AT Heads in confidence position)
   VIDEO OUT → SET UP → STATE → [ ]
   (CURSOR CENTER)
   [→] → [→] → [→](EDIT REC) →
   TAPE → MANUAL EDIT → INSERT

3. Set the VTR PLAY mode.
4. Confirm that the waveform is shown below and the envelope level on the front panel bar graph becomes maximum.
   If not, adjust Front Panel adjustment knob so that the these two conditions will be satisfied.
   TEST → SERVO → AT → F4(CENTER) → EXIT → EXIT → RF → AT HEIGHT → BS+F8 → [ ] (CURSOR CENTER) → F+[←]
   A and B Heads are selected by cusor key [←] [→].

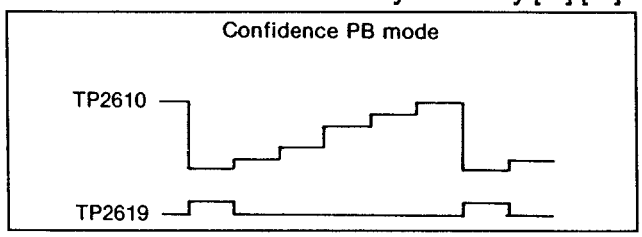

(NTSC)

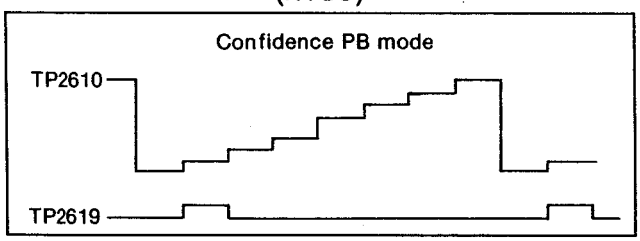

(PAL)

Note: This AT HEIGHT adjustment is tentative adjustment to get maximum envelope in correct AT Trace. Actual AT Adjustment must be done in AT (S4) Adjustment.

<STEP 5>

1. Memorize the frequency characteristics waveform to VIEW B of the spectrum analyzer.
2. Set the machine condition as follows.
   MANUAL EDIT → INSERT (INSERT OFF mode).

Note: STEP 4 and 5 is place the AT Heads in the confidence position, when in Playback mode. The frequency characteristics can be memorized and compared to the Rec frequency characteristics.

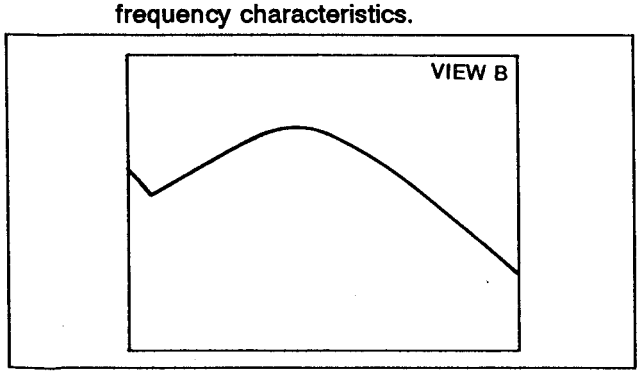

<STEP 6>

1. Eject the alignment tape and insert a self recording tape.
2. Connect the spectrum analyzer probe to TP8 on S2 Board.
3. Set the VTR in Rec mode.
4. Make sure that the AT Head height is correct position. to get maximum envelope on CH1 display.
5. Set the FRONT MENU to REC CURRENT mode.
   TEST → RF → F4(REC CURRENT) → BS+F8 → [ ] (CURSOR CENTER) → F+[←]
   CH0 A, CH0 B, CH1 A, CH1 B Heads are selected by cursor key [↑] [↓].
6. Confirm that envelope on the bar graph is still keeping maximum level. If not, back to AT-HEIGHT adjusting menu and readjust Front Panel adjusting knob to get maximum level of envelope.
7. Set spectrum analyzer to REG 5. (refer to set up chart).

<STEP 7>

Adjust the REC Current CH1 A and CH1 B so that the waveform level is same level with the alignment tape play level at 5MHz.

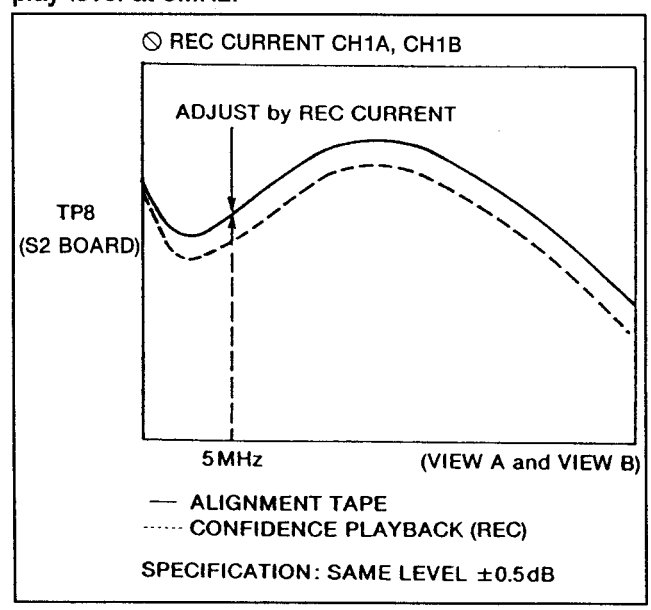

<STEP 8>

1. CH1B Rec Current Adjustment is same as CH1A which is described STEP 6-3 ~ STEP 7 (Just change the CH).

<STEP 9>

1. Adjust VR7 (CH1 A) and VR9 (CH1 B) so that the waveform level is same at 30MHZ as shown below and confirm that the error rate on the front panel is minimum.
2. If it is not, set the CH1 B to -128 by using adjustment VR on the front panel. And adjust VR7 (CH1 A) so that the error rate is minimum and same level.
3. Adjust VR9 (CH1 B) so that the error rate is minimum by using the same method above.

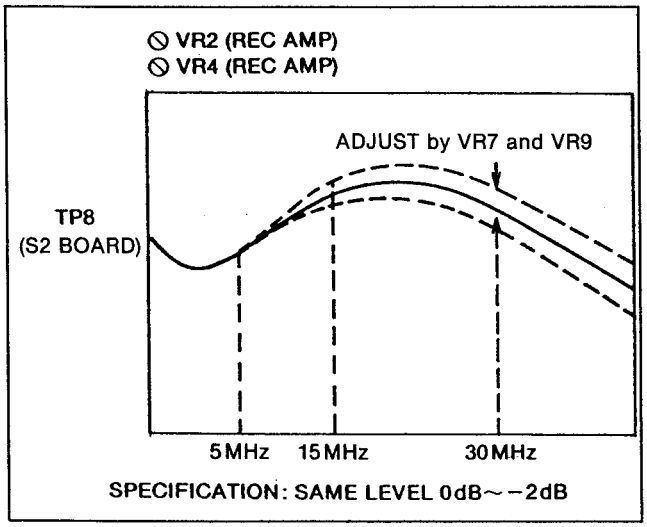

<STEP 10>

1. If level is increased at 30MHz to 35MHz, adjust REC CURRENT CH1 A and CH1 B so that the output level at 5MHz is same level. (A:0).
2. If the level is increased at 5MHz, adjust REC CURRENT CH1 A and CH1 B so that the output level at 5MHz is same increasing value. (a:c).

Caution: Adjust point of VR7 and VR9 are as shown below.

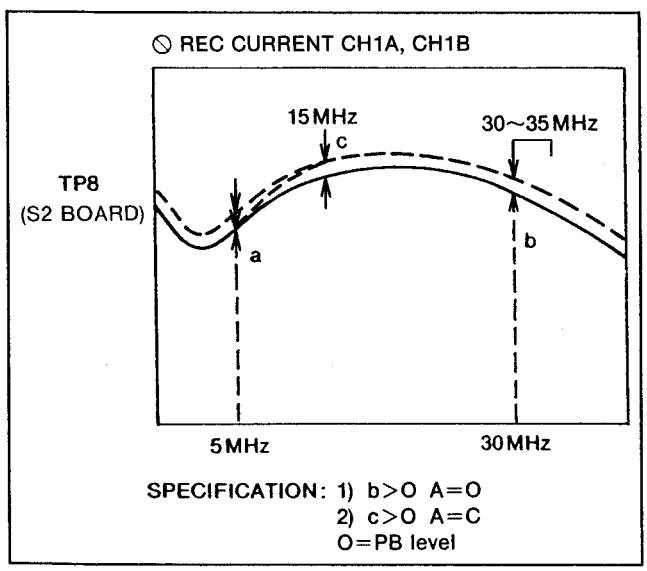

<STEP 11>

1. Set the machine condition as follows.
   VIDEO OUT → SET UP → STATE → [ ] (CURSOR CENTER)
   [→] → [→] → [→](EDIT REC) → TAPE → MANUAL EDIT → INSERT
2. Set the VTR PLAY mode.
3. Confirm that the waveform level is same and error rate is minimum.

<STEP 12>

Set the AT HEIGHT Front Menu to all 0.

<STEP 13>

1. Save the REC CURRENT DATA as follows TEST MENU.
   BS + F8 → F9 (Select USER) → F + F11(SAVE)

Note: When save the data, REC CURRENT data display will be disappeared.

Simplified Adjustment Procedure (INFORMATION)

1. Insert a cassette and place the unit in recording mode.
2. Set the machine condition as follows.
   TEST→RF→REC CURR→[ ](CURSOR CENTER) → [→] → (REC CURR).
   CH0 A, CH0 B CH1 A or CH1 B Heads are selected by cursor key [↑] [↓].
3. Adjust each CH by using the adjustment VR on the front panel so that the output envelope is maximum and minimum error on the display.
   * In confidence mode, if adjust CH0 A, change the CH0 B envelope output. (CHA recording, CHB playback in confidence mode).
4. Adjust VR2, VR4, VR7 and VR9 on the REC AMP board so that the error rate is minimum.
5. After this adjustment check the frequency characteristics waveforms by using the spectrum analyzer. Refer to the item 14-2 and 14-3.
6. This specification is minimum error rate. (Inner Error rate is less than 4 on the display bar.)
7. If out of specification check the frequency characteristic waveform by using the spectrum analyzer. Connect the spectrum analyzer to TP8 on the S1 board and play back the alignment tape (1) and memorize the frequency characteristic waveform.
8. After memorize, place the unit in the recording mode.
9. If output waveform is same as the playback waveform, readjust the VR612 and VR613 so that the output level goes down a few dB level around 40MHz portion and minimum error rate as shown in Figure.

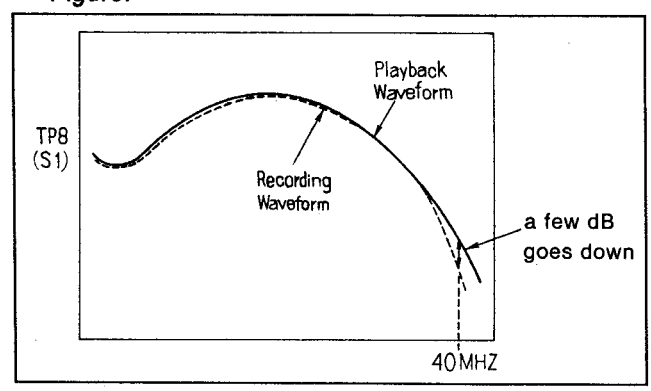

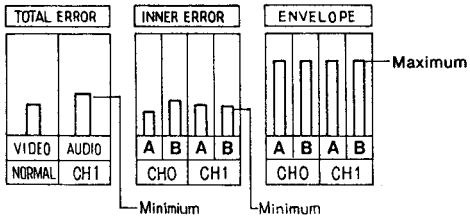

REC CURRENT	
CH0A	+ 110
CH0B	- 120
CH1B	+ 53
CH1A	+ 52

RF2 ENVELOPE DETECTION ADJUSTMENT

SPEC	MAX. ENVELOPE ON FRONT METER
TEST	FRONT METER OF TEST RF MENU
MODE	PLAY
TAPE	COLOR BAR SECTION OF ALIGNMENT TAPE
M.EQ	400MHz OSCILLOSCOPE
INPUT	
ADJ.	VR10[B3](CH1 OFF), VR12[B3](CH1 GAIN) VR5 [F1], VR11 [G1]

<STEP 1>

1. Set VR11 to center position.
2. SCOPE CH1 : TP1
   CH2 : TP207 for Trigger
3. Adjust VR5 so that the DC voltage is 1.5V ± 0.1V.

<STEP 2>

1. Turn the VR10 fully clockwise.
2. Playback the alignment tape color bar portion.
3. Set the tracking FIX mode.
   TEST → RF → TRACKING → FIX
4. Adjust VR12 so that the envelope meter shows 3.0 as shown in figure.
5. Set the tracking variable mode.
   TEST → RF → TRACKING → VAR
   Confirm the envelope meter value is changed when the front panel adjustment VR is turned.

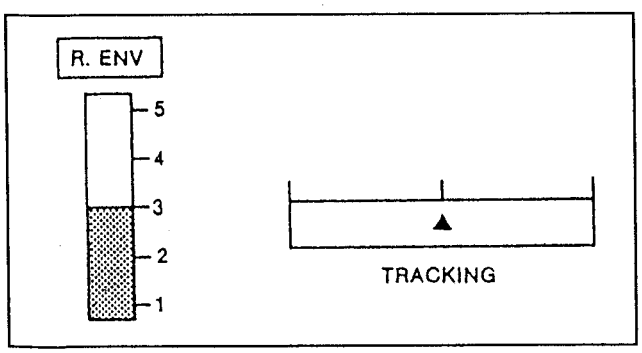

FINAL CONFIRMATION

SPEC	REFER TO FIGURE
TEST	TP8(S1,S2 BOARD), TP207(REC AMP BOARD) → EXT IN
MODE	REC mode
TAPE	SELF RECORDING TAPE
M.EQ	SPECTRUM ANALYZER, 50Ω PROBE WITH CLIP
INPUT	75% COLOR BAR SHUFFLING OFF ALIGNMENT TAPE
ADJ.	FRONT PANEL REC CURRENT (SP MENU) VR2, VR4, VR7, VR9

1. Set the spectrum analyzer REG 4 (refer to SET UP chart).
2. Connect the spectrum analyzer to TP8.
3. Connect the EXT input of spectrum analyzer to TP207.
4. Place the unit in the recording mode and memorize the frequency characteristics waveform to VIEW B of the spectrum analyzer.
5. Set the Rec current of front panel so that the output spectrum of 5MHz goes down to -5dB.
6. Confirm that the output spectrum as shown in figure.
7. If it is not, readjust the Rec current of front panel and VR2, VR4, VR7 and VR9.

MIX point of Both Spectrum = 30MHz ± 3MHz (NTSC)
35MHz → 3MHz (PAL)

8. Confirm that the error rate is minimum and envelope is maximum at bar graph.

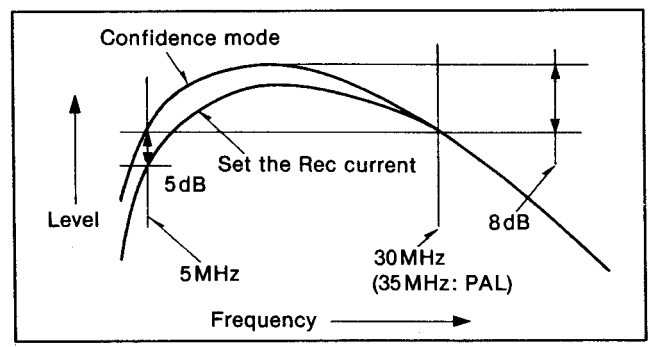

TOTAL CONFIRMATION AFTER CENTER DRUM REPLACEMENT

1. ERROR RATE CONFIRMATION

* Set the following SWs to OFF position.
  - SW51-1~4 (on L2 Board) Line and Field Shuffle SW
  - SW1~4 (on L3 Board) Video / Audio ECC SW
  - SW802 (on L4 Board) Video Conceal SW

1-1. MASTER TAPE PLAYBACK

1. Open the TEST → RF menu.
2. Playback the Alignment Tape No.1 (color bar Shuffling On portion).
3. Confirm that the TOTAL ERROR RATE display is,
   NTSC: Less than 2.0
   PAL: Less than 2.5

1-2. SELF REC / PLAYBACK

1. Make a recording few minutes.
2. Playback the just recorded portion.
3. Confirm that the TOTAL ERROR RATE display is,
   NTSC: Less than 2.0
   PAL: Less than 2.5

1-3. CONFIDENCE PLAYBACK

1. Set the SW51 (on L2 Board), SW1~4 (on L3 Board) and SW802 (on L4 Board) to ON position.
2. Set the confidence PB mode as follows.
   VIDEO OUT → F10 (STATE) → [ ] CENTER CURSOR → REC → TAPE
3. Make a recording and confirm that the TOTAL ERROR RATE does not displayed for about 1 minute.

2. AT PLAY CONFIRMATION

TEST POINT: TP8 (S1,S2)..... AT Envelope
TP400 (S1,S2)..... H SW for Trigger

TAPE USE: Alignment Tape No.1 (Color Bar Portion)

1. Set the VTR to VAR × -1 and VAR × 3 alternately.
2. Confirm that the entrance side and exit side of output envelope doesn't droop more than 40% from the maximum point. If droop more than 40% readjust the P3 post height and P6 post height.

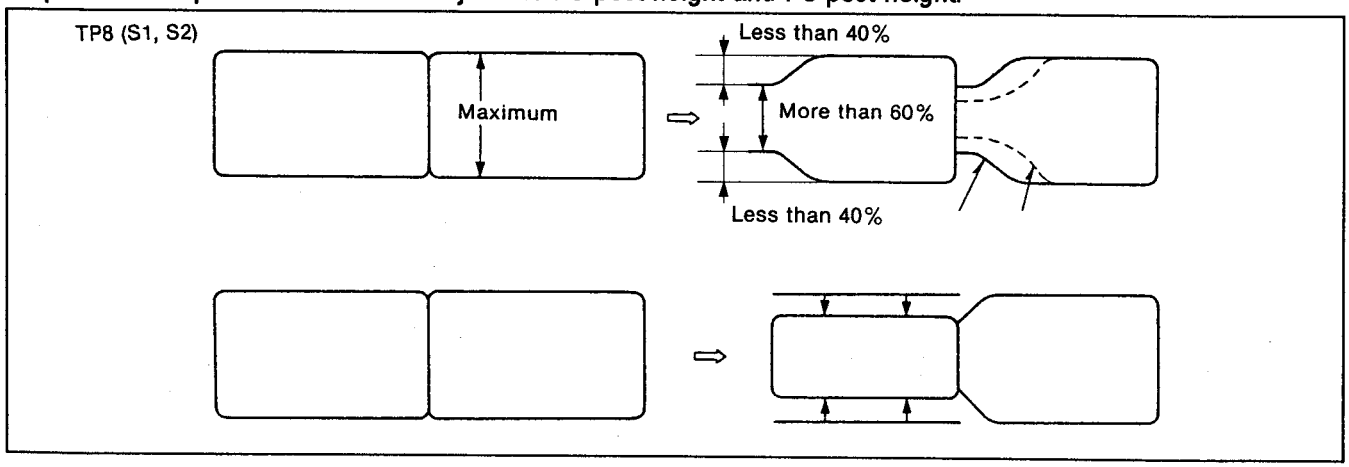

3. Set the VTR to VAR × -1 and press the play button alternately.
4. Confirm that the output envelope do not drop off at the entrance side and exit side.

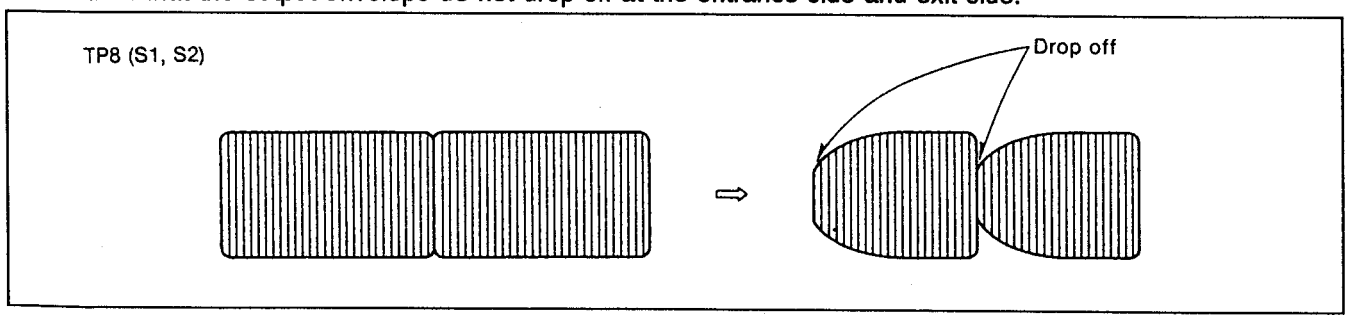

* If adjust the P3 or P6 post, tape pass linearity reconfirmation is necessary.

3. INSERT EDIT CONFIRMATION

TEST POINT: AUDIO OUT CH1/CH3
Error Rate Display

INPUT SIGNAL: Video/Audio Signal (Not Specified)

TAPE USE: Self Recording Tape

1. Set the following SWs to ON position.
   - SW51-1~4 (on L2 Board) Line and Field Shuffle SW
   - SW1~4 (on L3 Board) Video/Audio ECC SW
   - SW802 (on L4 Board) Video Conceal SW
2. Make a recording for a few minutes with other VTR.
3. Make a Audio CH1, CH3 insert edit using the other VTR recorded tape.
4. Play back the just inserted portion and monitor the CH1, CH3 Audio sound.
5. Confirm that the IN and OUT point has no Audio mute and no high error on the Error Rate display.
6. If the Audio mute occurs, please reconfirm the FE Head Height.

SPECTRUM ANALYZER SETUP
(MODEL HP8591A)

1. SETUP --- REG 1

ITEM	PARAMETER
(1) REF LEVEL	0dBm
(2) ATTEN	10dB
(3) DIV (dB/DIV)	10dB/div
(4) CENTER FREQUENCY	27.5MHz
(5) FREQUENCY SPAN	10MHz
(6) RES BW	100kHz
(7) VIDEO BW	3kHz
(8) SWEEP TIME	300msec
(9) TRIGGER	EXT (HEAD SW)
(10) VID AVG	30

2. SETUP --- REG 2

ITEM	PARAMETER
(1) REF LEVEL	0dBm
(2) ATTEN	10dB
(3) DIV (dB/DIV)	10dB/div
(4) CENTER FREQUENCY	27.5MHz
(5) FREQUENCY SPAN	10MHz
(6) RES BW	100kHz
(7) VIDEO BW	3kHz
(8) SWEEP TIME	300msec
(9) TRIGGER	EXT (HEAD SW)
(10) VID AVG	30

3. SETUP --- REG 3

ITEM	PARAMETER
(1) REF LEVEL	0dBm
(2) ATTEN	10dB
(3) DIV (dB/DIV)	10dB/div
(4) START FREQUENCY	20MHz
(5) STOP FREQUENCY	70MHz
(6) RES BW	300kHz
(7) VIDEO BW	3kHz
(8) SWEEP TIMER	30msec
(9) TRIGGER	FREE RUM

4. SETUP --- REG 4

ITEM	PARAMETER
(1) REF LEVEL	-10dBm
(2) ATTEN	10dB
(3) DIV (dB/DIV)	5dB/div
(4) START FREQUENCY	0MHz
(5) STOP FRQUENCY	50MHz
(6) RES BW	1MHz
(7) VIDEO BW	3kHz
(8) SWEEP TIME	300msec
(9) TRIGGER	EXT (HEAD SW)
(10) VID AVG	10

5. SETUP --- REG 5

ITEM	PARAMETER
(1) REF LEVEL	-20dBm
(2) ATTEN	10dB
(3) DIV (dB/DIV)	5dB/div
(4) START FREQUENCY	0MHz
(5) STOP FREQUENCY	50MHz
(6) RES BW	1kHz
(7) VIDEO BW	3kHz
(8) SWEEP TIME	300msec
(9) TRIGGER	EXT (HEAD SW)

6. SETUP --- REG 6

ITEM	PARAMETER
(1) REF LEVEL	-15dBm
(2) ATTEN	10dB
(3) DIV (dB/DIV)	5dB/div
(4) START FREQUENCY	27.5MHz
(5) STOP FREQUENCY	0MHz
(6) RES BW	1MHz
(7) VIDEO BW	3kHz
(8) SWEEP TIME	200msec
(9) TRIGGER	EXT (HEAD SW)
(10)VID AVG	5

[AZIMUTH TOOL ADJUSTMENT]

1. VR PRESETTING

1) Tool Setting
*LINEARITY/HEIGHT SW : LINEARITY
*PAL/NTSC SW : PAL or NTSC depend on VTR in use
*A(FIX POSITION)/B(NOT USED) SW : A

2) VR Setting (AZIMUTH & DET P.C.Board)

*VR9 : Fully clockwise

*VR10 : Fully counterclockwise

3) VR Setting (VIDEO 2 P.C.Board)

*VR1 (Y RF LEVEL) : Fully Counterclockwise

*VR17 (C RF LEVEL) : Fully Counterclockwise

*VR8 (Y V-V RF LEVEL) : Fully clockwise

*VR24 (C V-V RF LEVEL) : Fully counterclockwise

*VR3 (Y CH1 EQ1) : Fully counterclockwise

*VR19 (C CH1 EQ1) : Fully clockwise

*VR14 (Y OUT LEVEL) : Fully counterclockwise

*VR30 (C OUT LEVEL) : Fully counterclockwise

*VR15 (Y DOC DET) : Fully counterclockwise

*VR31 (C DOC DET) : Fully clockwise

2. CONFIRMATION OF HEAD AMP OPERATION

1) Play back a 75% color bar portion of the Alignment Tape.
2) Confirm that the envelopes appear at TP11 and TP12 (on REC AMP BOARD) when CUE REC LINPUT is shorted.

3. CONFIRM AND ADJUSTMENT FOR HEAD HEIGHT

1) Connect the tool and AJ-D350.
2) Set the Tool condition as follows.
   MODE : Head Height
   NTAC/PAL : According to your VTR
3) Insert the Alignment tape (75% color bar portion) and place the unit in the VAR × 3 mode.
4) SCOPE CH1 : TP3 (CH0 ENV) or TP11 (CH1 ENV)
   SCOPE TRIGGER : TP12 (on the Azimuth & DET Board)
5) Confirm that the triangle shape is saturated or not at TP3 and TP11 as shown in Figure 1.
   If it is saturated (trapezoid shape), adjust VR7 (CH0 RF LEVEL) and VR6 (CH1 RF LEVEL) so that the envelope shape becomes just triangle shape, then turn the same VR further with a touch as shown in Figure 1.

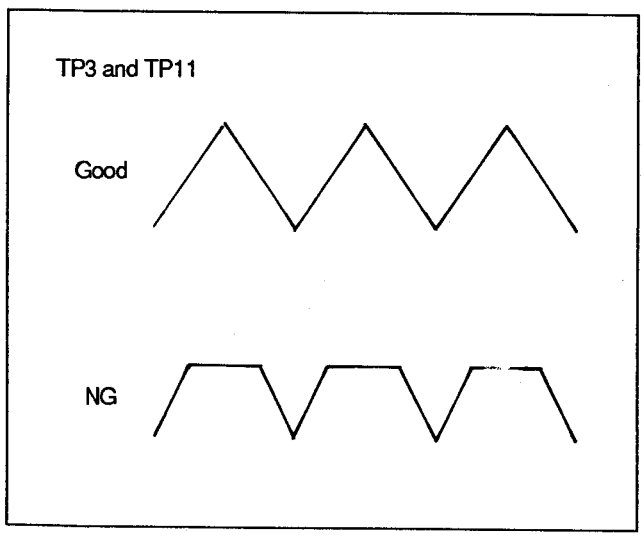

Figure 1

6) Adjust VR1 (CH0 DC) and VR2 (CH1 DC) so that the off set level is 0VDC as shown in Figure 2.
7) Adjust VR4 (CH0 ENV_LEVEL) and VR5 (CH1 ENV_LEVEL) so that the envelope level is 2Vp-p as shown in Figure 2.

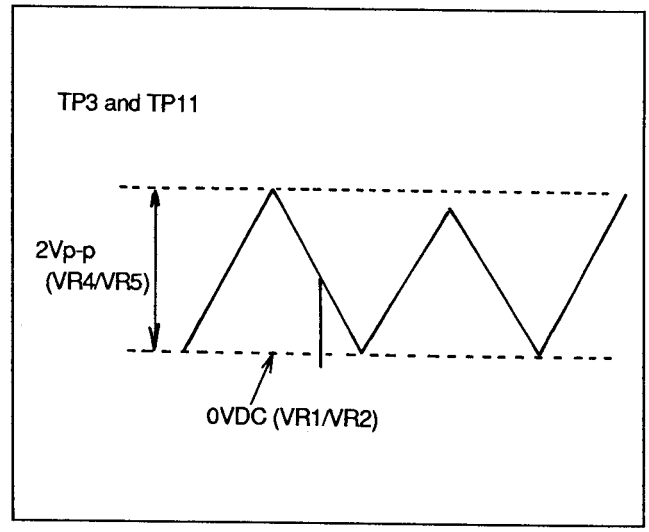

Figure 2

4. DEMOD (1) ADJUSTMENT

Test Points : TP8, TP19 (VIDEO 2)
Adjustments : VR12, VR28, VR9, VR25 (VIDEO 2)

Note: TP8 (TP19) means, TP8 is CH0 side and (TP19) is CH1 side.

1) Play back No.3 alignment tape
2) Connect the scope to TP8 (TP19) and adjust VR12 (VR28) so that the A DC level is 0V DC.
3) Adjust VR11 (VR27) so that the B level is 1.0Vp-p ± 0.2Vp-p.
4) Set the scope to V rate and DC mode and adjust VR9 (VR25) so that the output noise is stable and average level as shown in Figure.

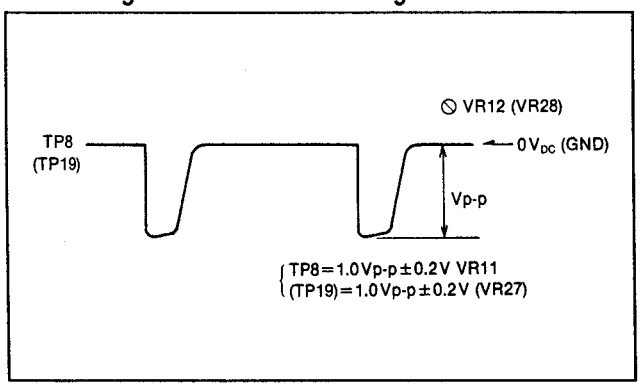

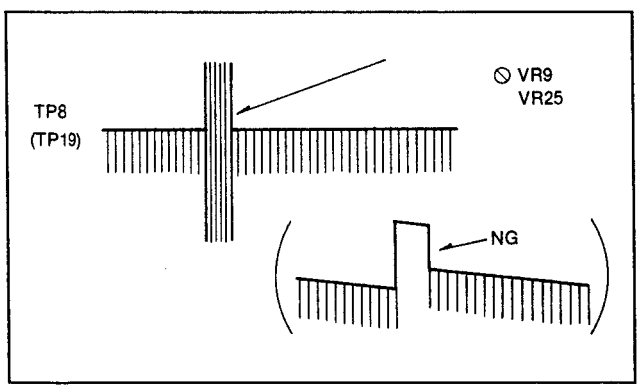

5. DEMOD (2) ADJUSTMENT

Test Points : TP18, TP19 (AZIMUTH & DETECT)
Adjustments : VR2, VR5, VR6, VR7, VR18, VR21, VR22

Note: TP18 (TP19) means, TP18 is CH0 side and (TP19) is CH1 side.

1) Play back No.3 alignment tape.
2) Connect the scope to TP18 (TP19) and Set the scope to H rate and DC mode.
3) Adjust VR2, VR5, VR6 and VR7 so that the signal noise of output is minimum as shown in Figure.

Note: Adjust each VR as shown below.
Adjust for minimum signal noise.

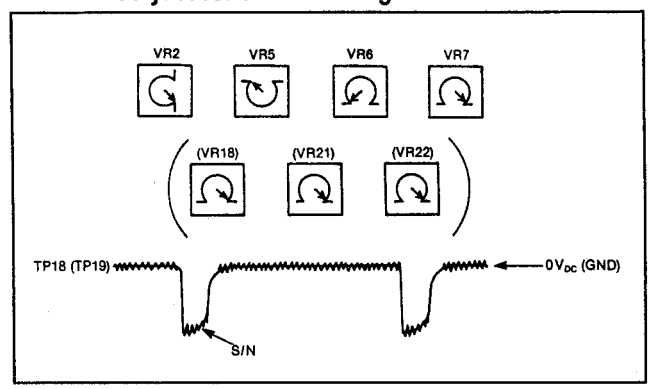

6. DEMOD (3) ADJUSTMENT

Test Points : A, B (VIDEO 2)
TP18, TP19 (AZIMUTH & DETECT)
Adjustments : VR15, VR31, VR12, VR28

1) Play back No.3 alignment Tape.
2) Connect the scope CH1 to A point and CH2 to B point. And set the scope to DC mode.
3) Adjust VR15 and VR31 so that the output DC level is 0.08V ± 0.01V DC.
4) Connect the scope to TP18 (TP19) and adjust VR12 (VR28) so that the output DC level is 0V DC.

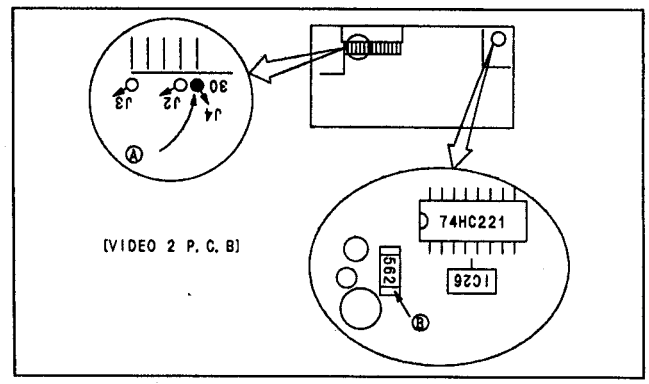

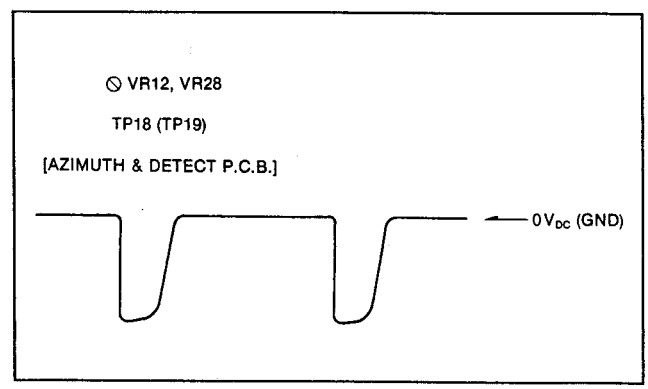

7. COMPARATOR ADJUSTMENT

Test Points : TP14,TP15,TP16,TP17 (AZIMUTH)
Adjustments : VR12,VR13 (AZIMUTH)

Note: TP14 (TP16) means, TP14 is CH0 side and TP16 is CH1 side.

1) Play back No.3 alignment tape.
2) Connect the scope CH1 to TP14 (TP16) and CH2 to TP15 (TP17). Set the scope to DC mode.
3) Adjust VR12 (VR13) so that the output DC level of TP14 is as shown in Figure.

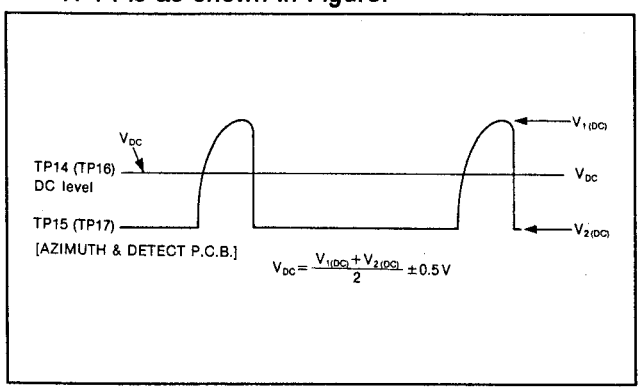

8. HEAD SWITCHING (NTSC) ADJUSTMENT

Test Points : TP37 of S5 on AJ-D350, TP10 (AZIMUTH & DETECT)
Adjustments : VR9, VR10

1) Play back No.3 alignment tape.
2) Connect scope CH1 to TP37 of S5 on AJ-D350 and CH2 to TP10.
3) Adjust VR10 so that the A portion is 0.35 ± 0.02ms as shown in Figure.
4) Adjust VR9 so that the B portion is 0.15 ± 0.02ms as shown in Figure.

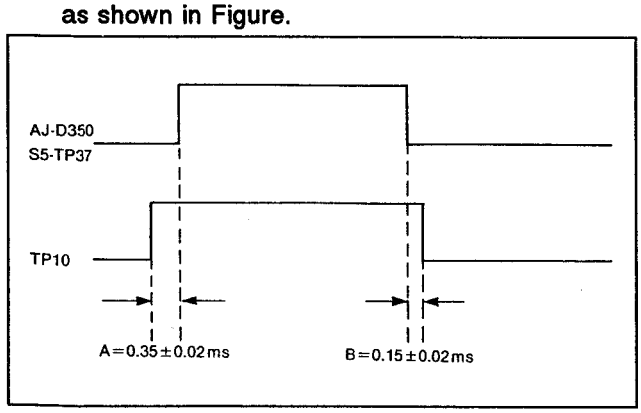

9. HEAD SWITCHING (PAL) ADJUSTMENT

Test Points : TP37 of S5 on AJ-D350, TP10 (AZIMUTH & DETECT)
Adjustments : VR8, VR11

1) Play back No.3 alignment tape.
2) Connect the scope CH1 to TP37 of S5 on AJ-D350 and CH2 to TP10.
3) Adjust VR11 so that the A portion is 0.35 ± 0.02ms as shown in Figure.
4) Adjust VR8 so that the B portion is 0.15 ± 0.02ms as shown in Figure.

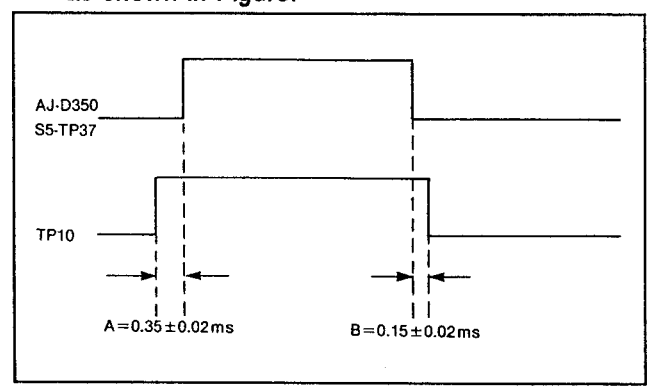

VFK0832 LINEARITY/HEIGHT ADJUSTMENT TOOL BLOCK DIAGRAM

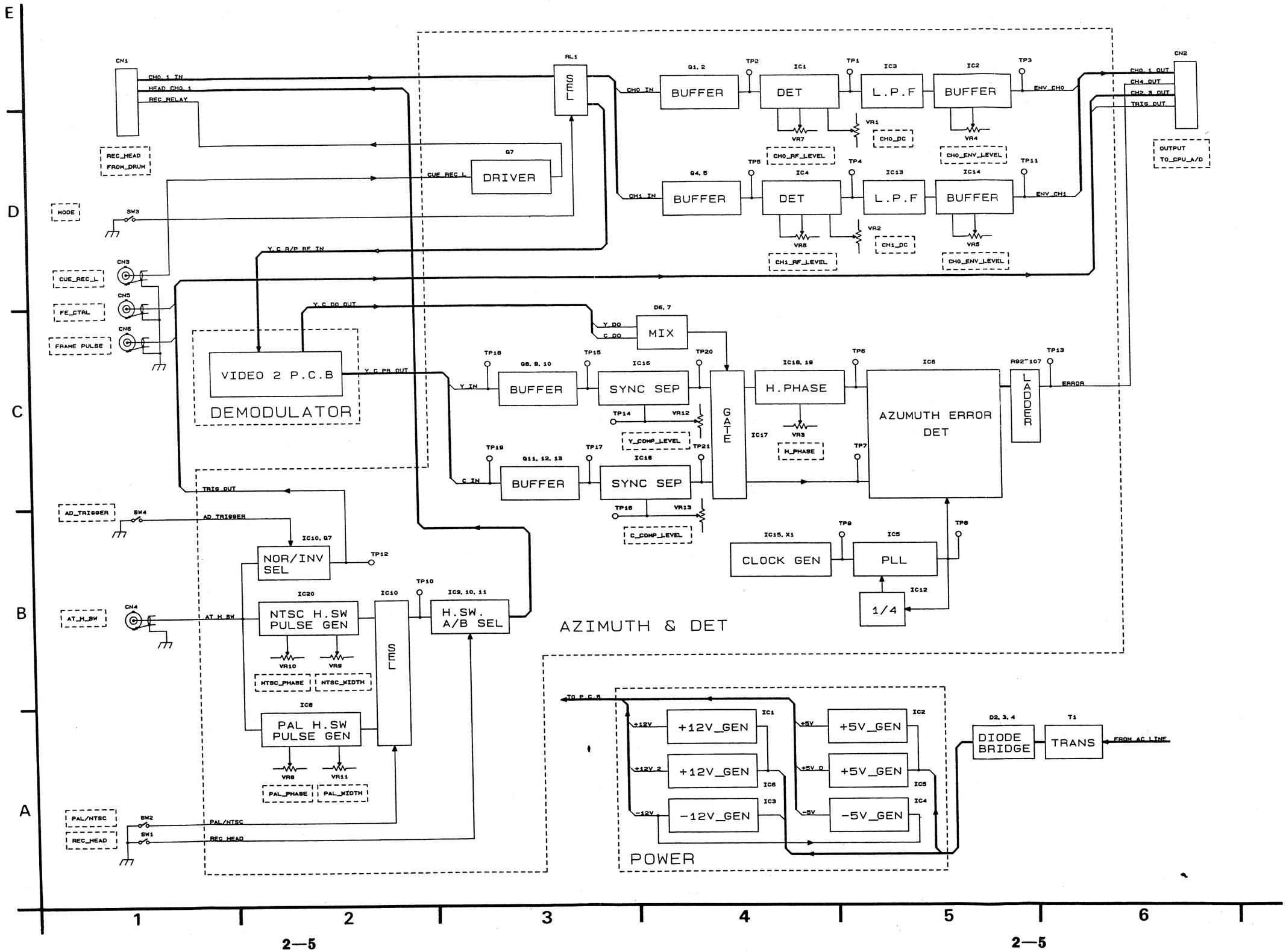

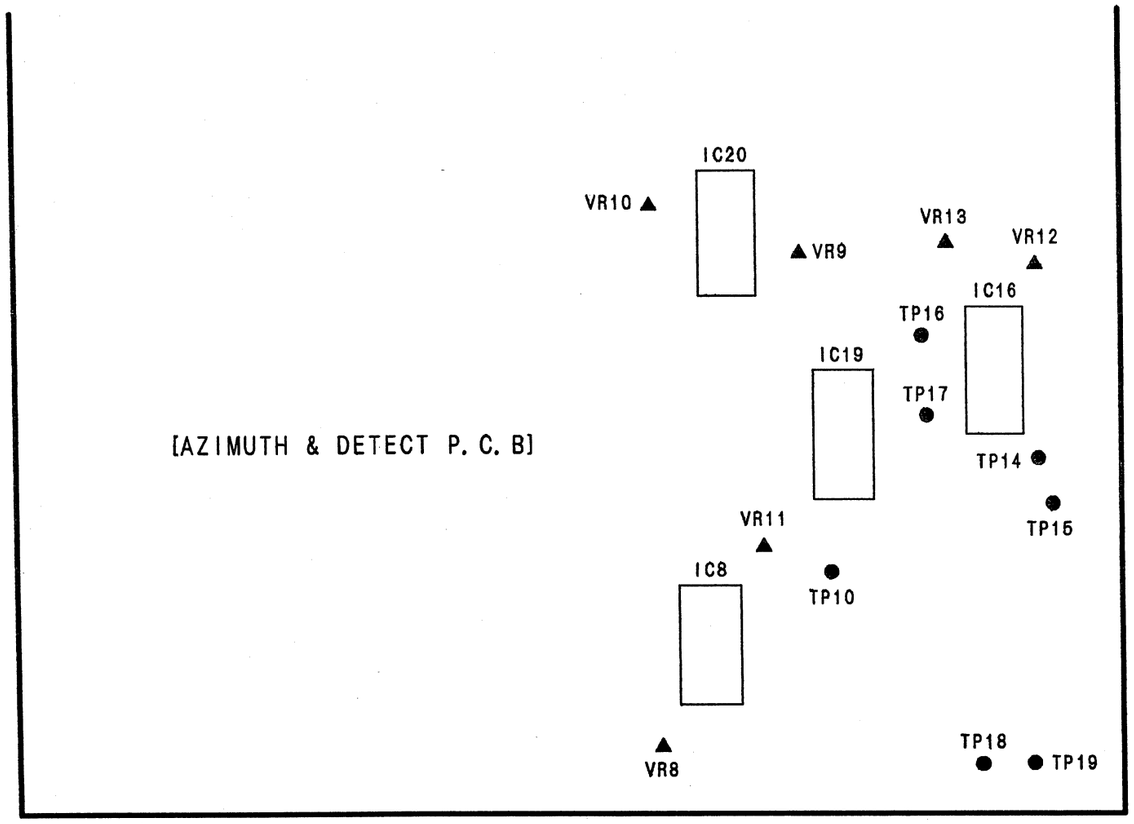

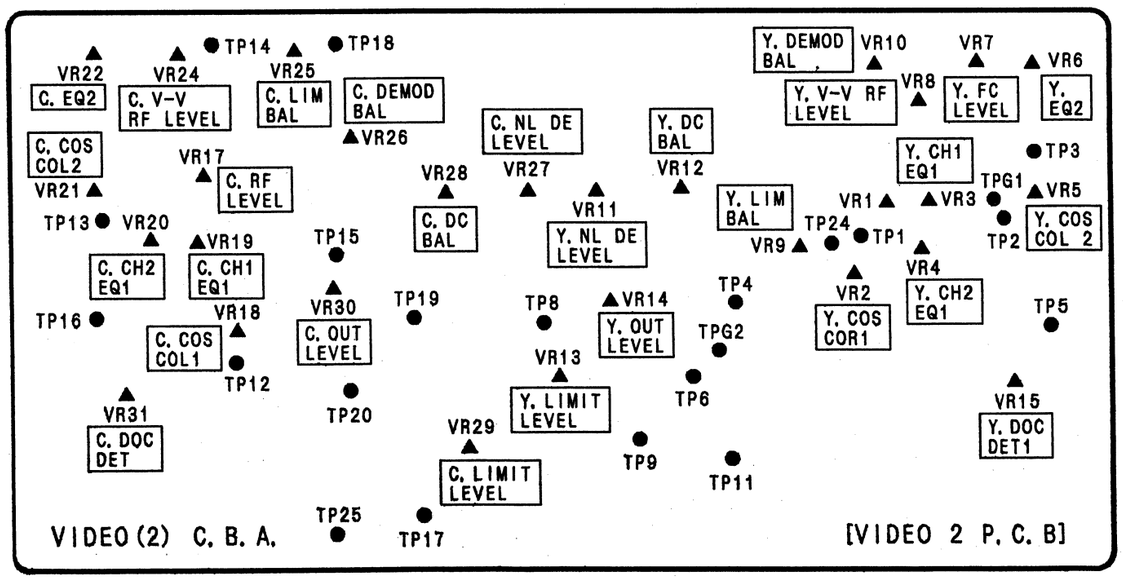

VFK0832 CABLE 2, CABLE 3, CABLE 4 SCHEMATIC DIAGRAM

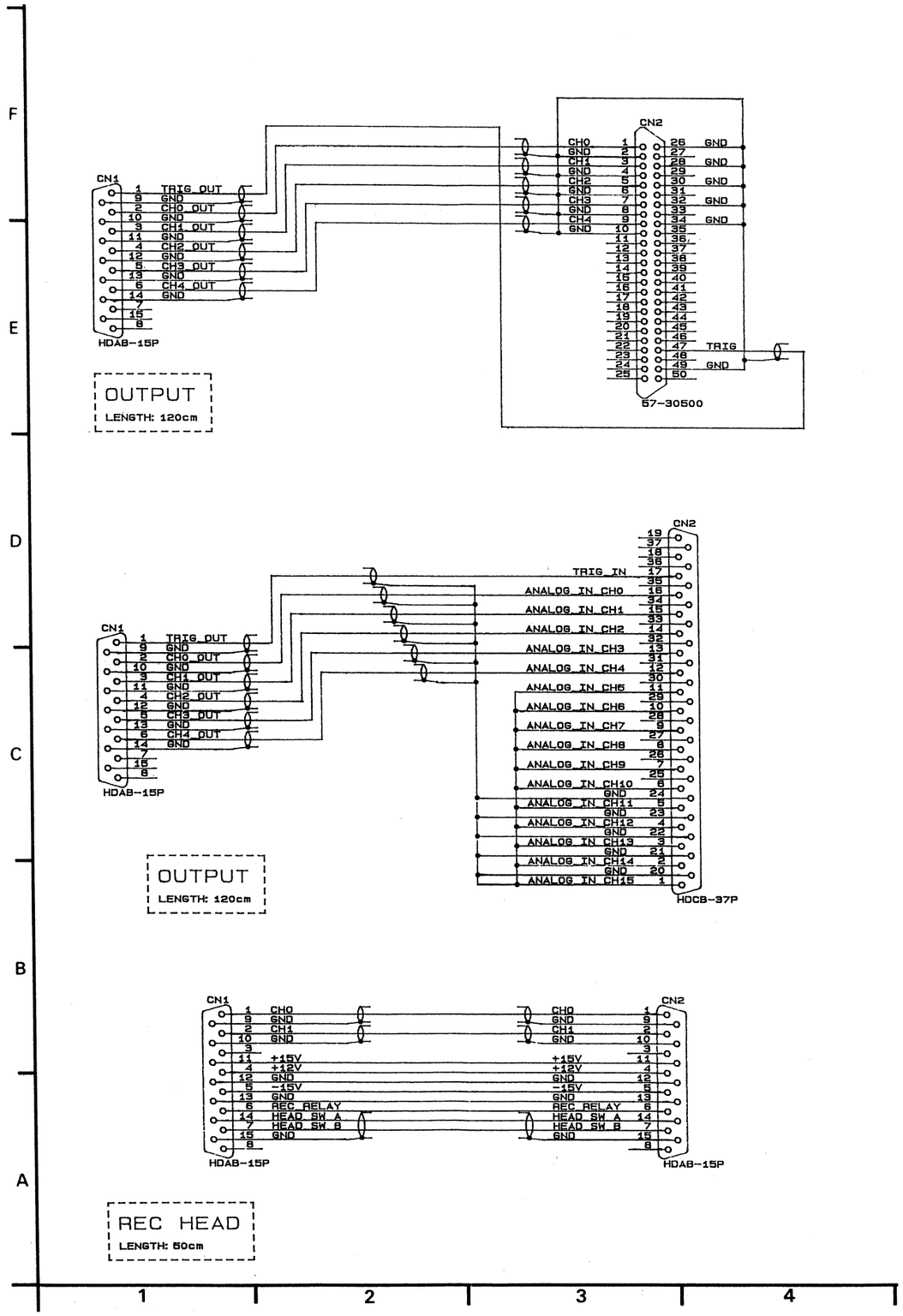

VFK0832 INTERCONNECTION SCHEMATIC DIAGRAM

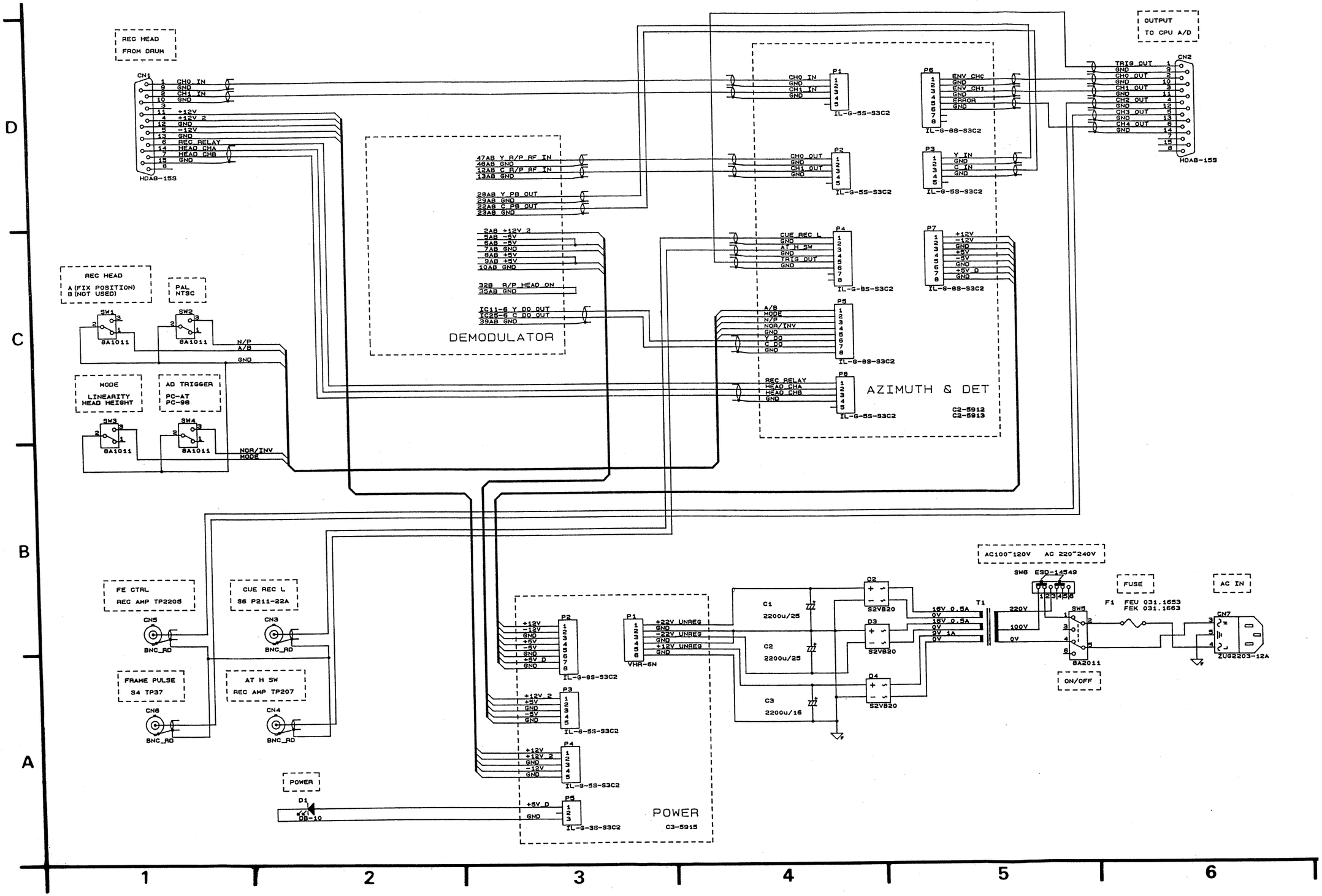

2—7

VFK0832 POWER SUPPLY SCHEMATIC DIAGRAM

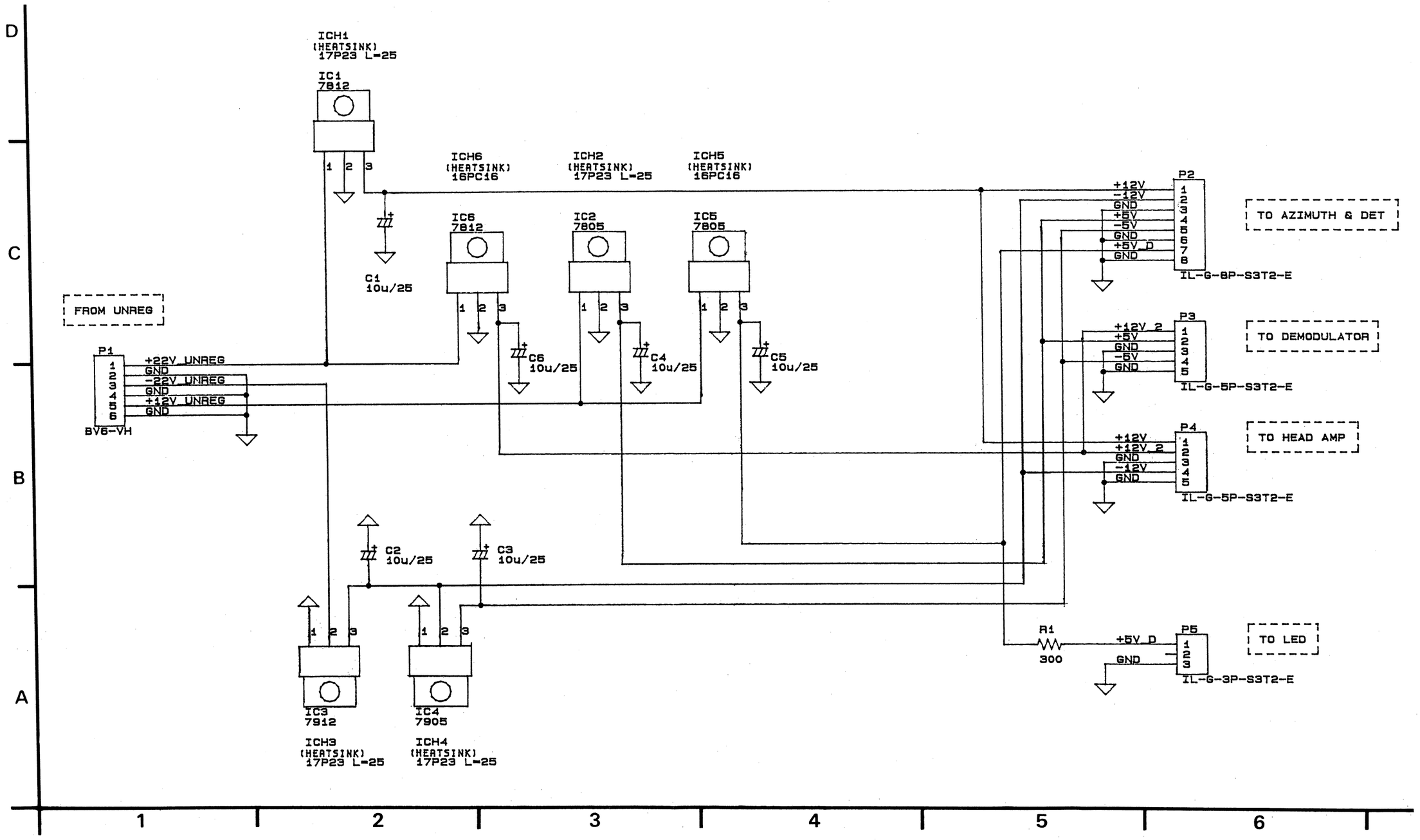

2—8

VFK0832 AZIMUTH & DETECTION (AZIMUTH SECTION) SCHEMATIC DIAGRAM

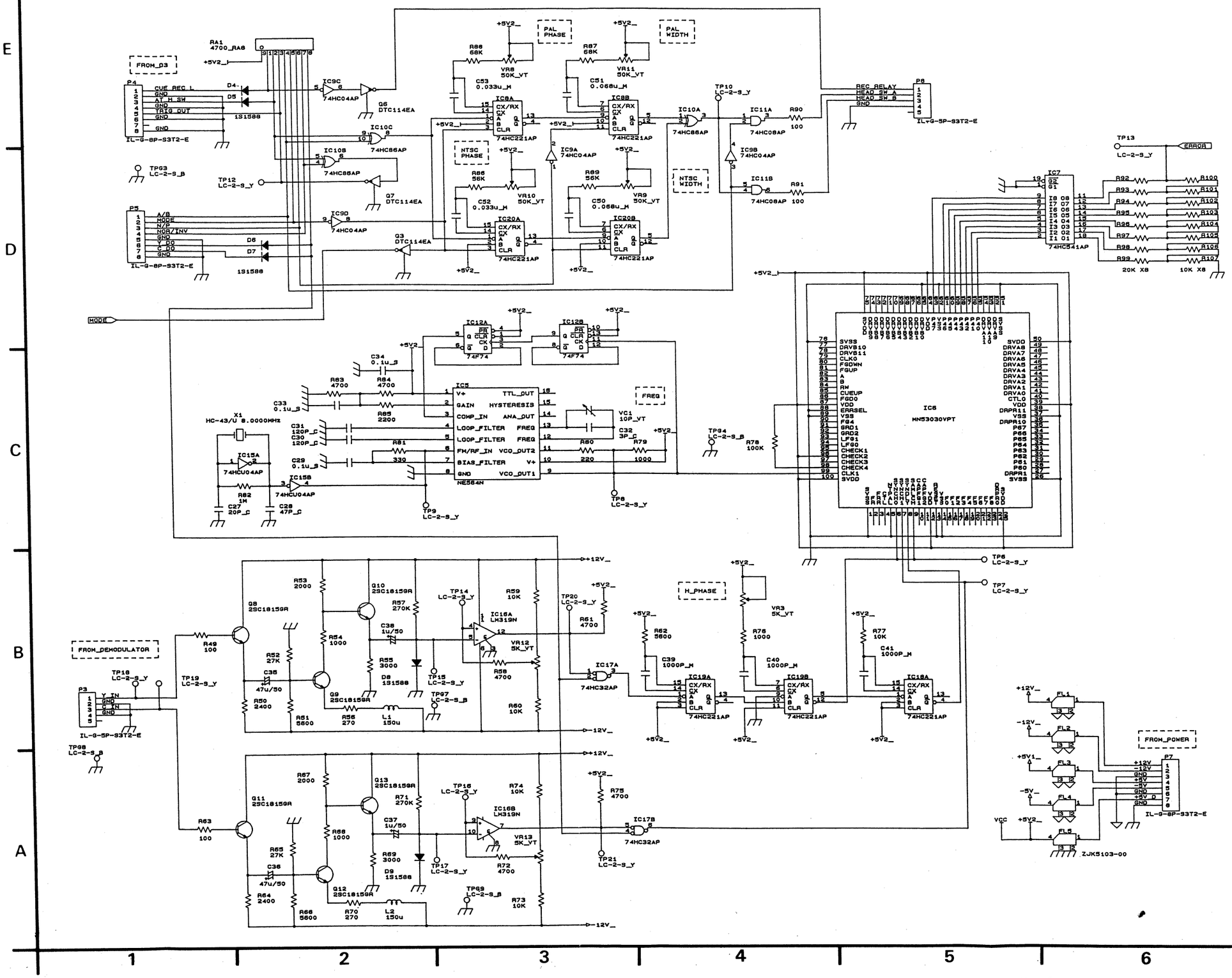

VFK0832 AZIMUTH & DETECTION (DETECTION SECTION) SCHEMATIC DIAGRAM

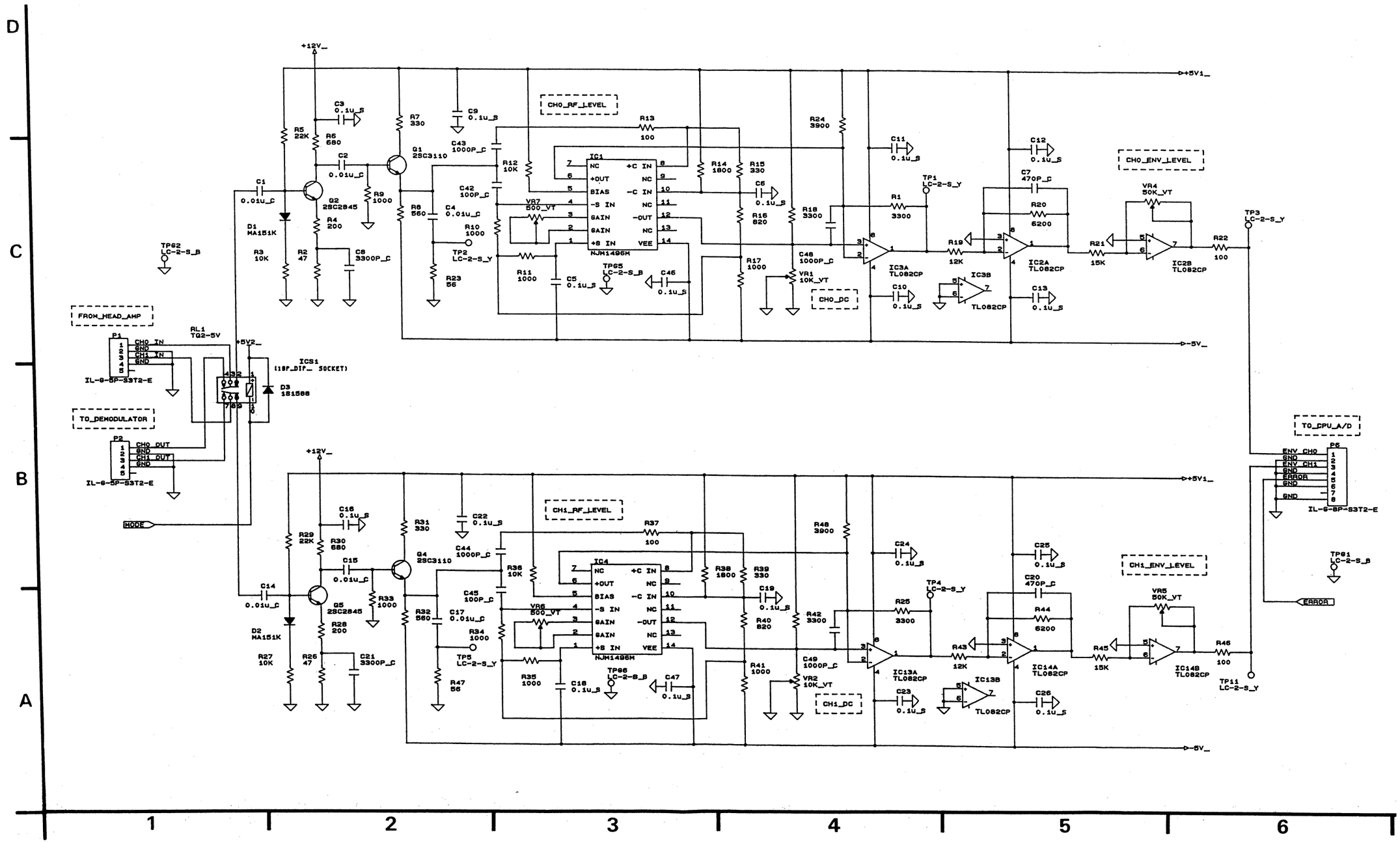

2—10

VFK0832 HEAD AMP SCEHMATIC DIAGRAM

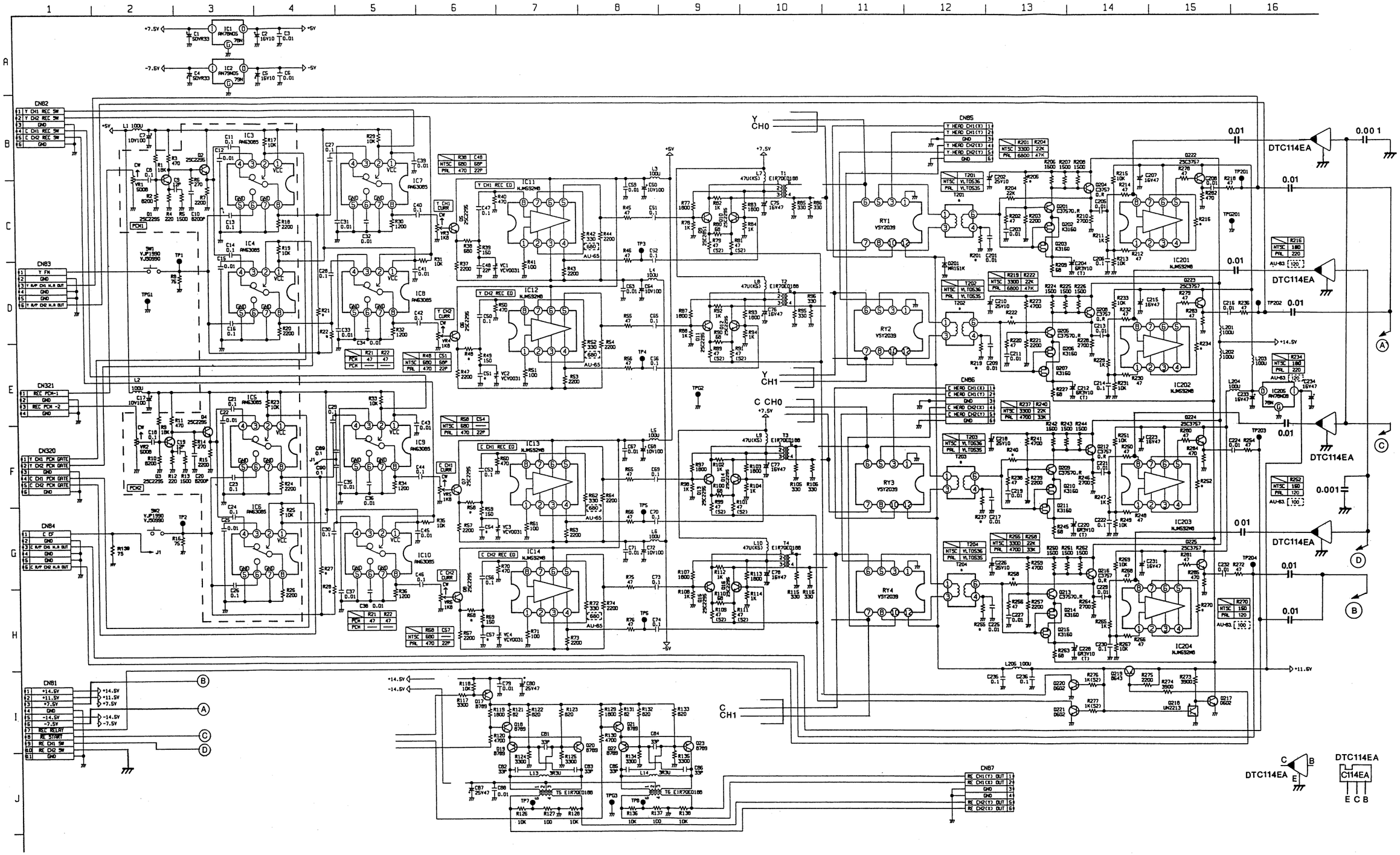

2—11

VFK0832 HEAD AMP CONNECTION SCHEMATIC DIAGRAM

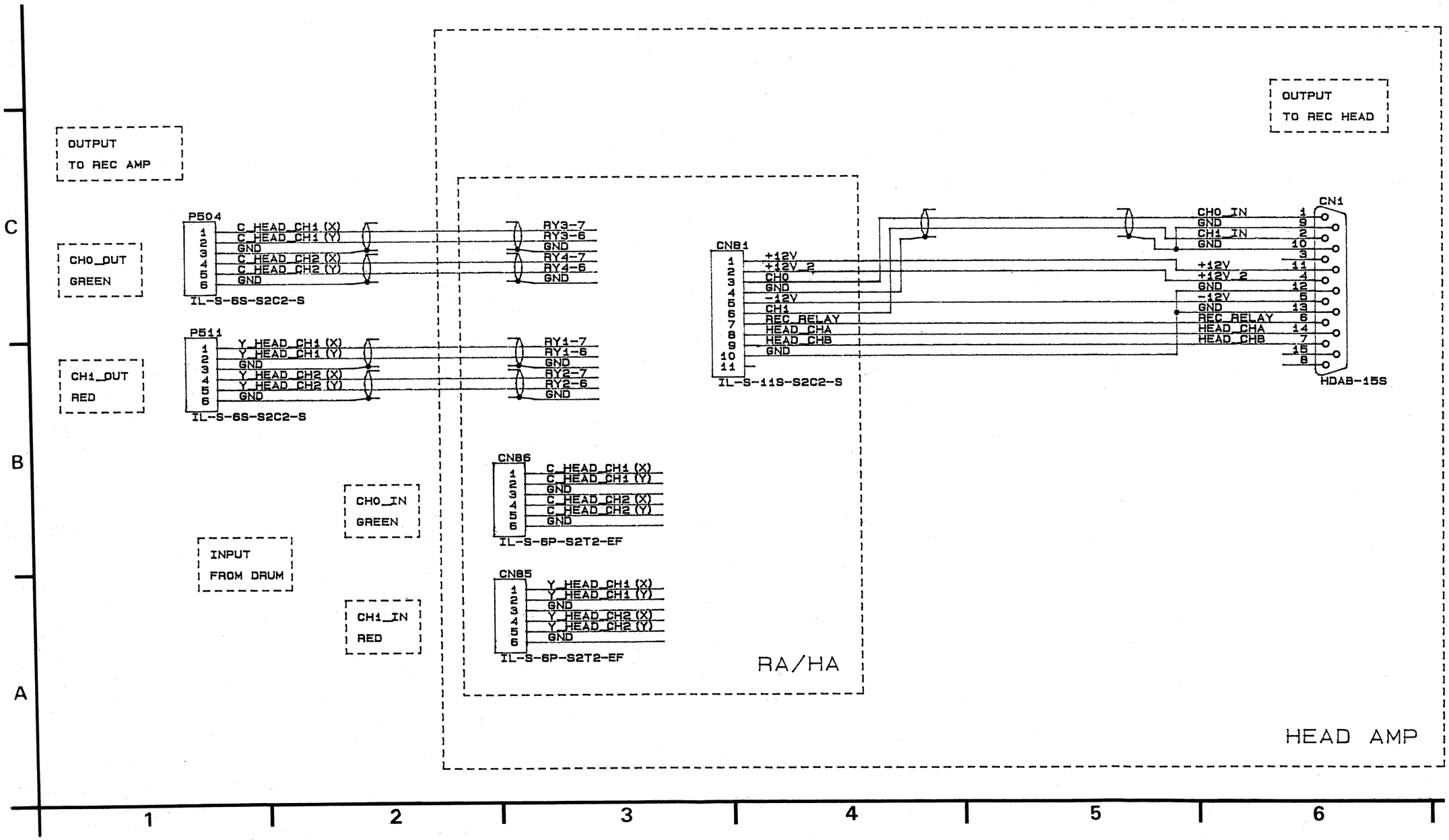

2—12

VFK0832 MODULATOR (VIDEO 2) SCHEMATIC DIAGRAM

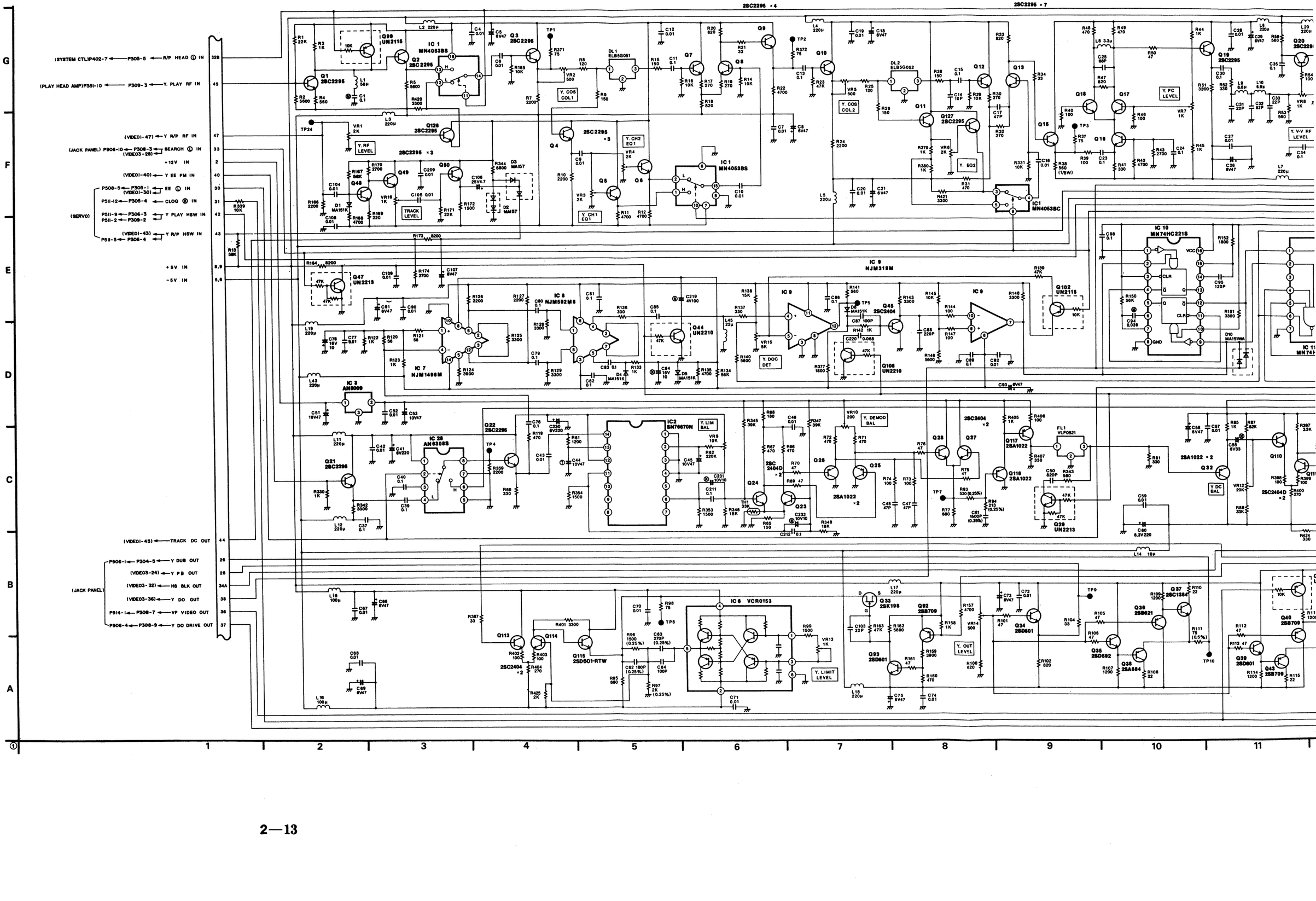

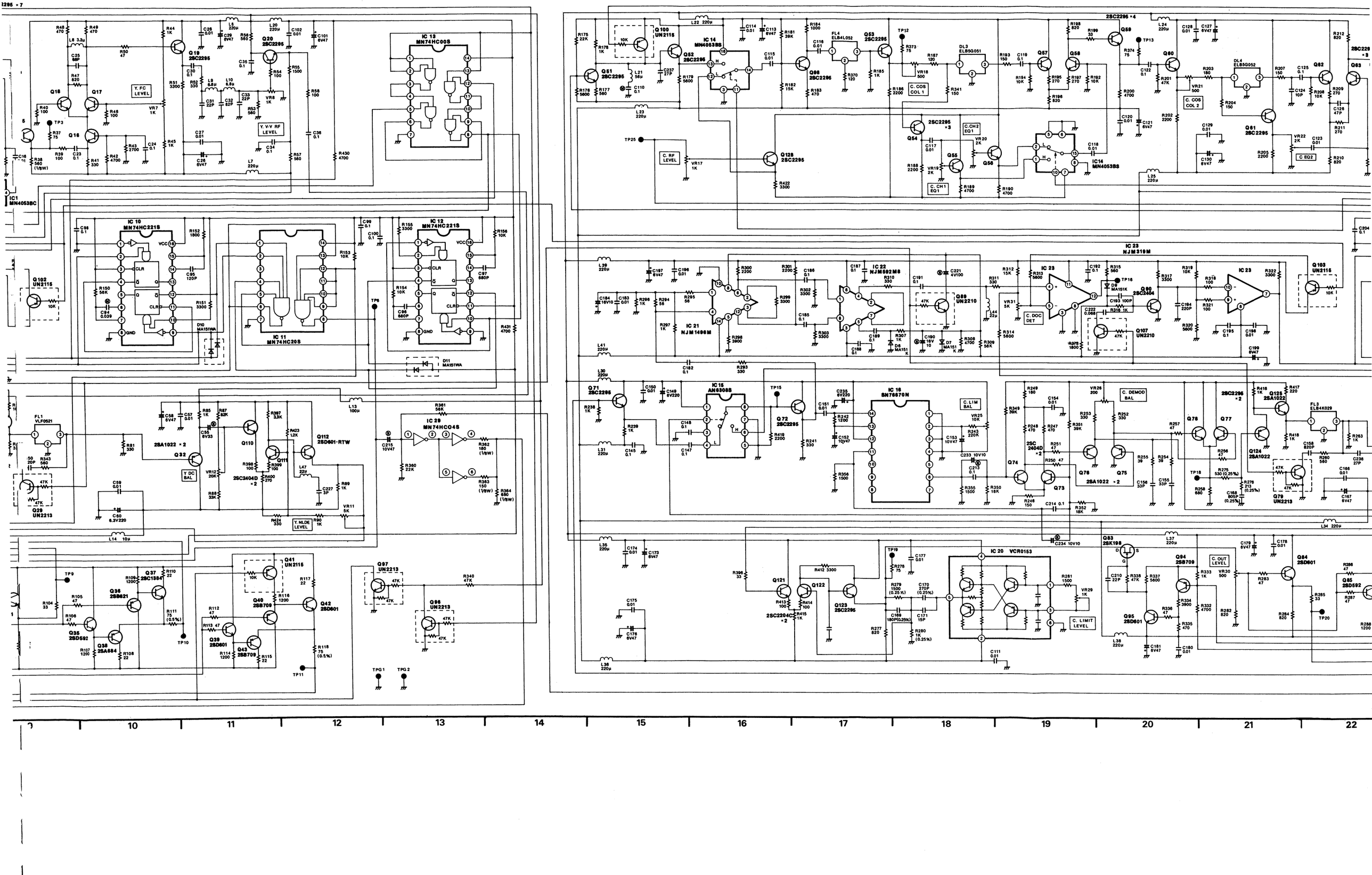
2295 × 7
IC 13 MN74HC00S
IC 14 MN4053BS
Q100 UN2115
Q51 2SC2295
Q52 2SC2295
Q53 2SC2295
Q98 2SC2295
Q128 2SC2295
2SC2295 ×4
2SC2295 ×3
Q54
Q55
Q56
Q57
Q58
Q59
Q60
Q61 2SC2295
Q62
Q63
IC1 MN4053BC
Q18
Q17
Q19 2SC2295
Q20 2SC2295
Q16
Y. FC LEVEL
Y. V-V RF LEVEL
C. RF LEVEL
C. COS COL 1
C. COS COL 2
C. CH1 EQ1
C. CH2 EQ1
C EQ2
DL3 ELB5G051
DL4 ELB5G052
FL4 ELB4L052
IC 10 MN74HC221S
IC 11 MN74HC20S
IC 12 MN74HC221S
Q102 UN2115
D10 MA151WA
D11 MA151WA
TP6
IC 22 NJM592M8
IC 23 NJM319M
IC 21 NJM1496M
Q89 UN2210
Q107 UN2210
Q103 UN2115
Q104 2SC2404
D8 MA151K
D6 MA151K
D7 MA151K
C. DOC DET
FL1 VLF0521
Q29 UN2213
Q32
2SA1022 × 2
Y. DC BAL
Q110
Q111
Q112 2SD601-RTW
2SC2404D × 2
Y. NLDE LEVEL
IC 29 MN74HC04S
L13 100µ
L14 10µ
Q71 2SC2296
Q72 2SC2295
IC 15 AN6308S
IC 16 SN76670N
C. LIM BAL
C. DEMOD BAL
2SC 2404D × 2
Q74
Q73
Q75
Q76
2SA1022 × 2
Q77
Q78
2SC2296 × 2
Q125 2SA1022
Q124 2SA1022
Q79 UN2213
FL3 ELB4K029
Q36 2SB621
Q37 2SC1384
Q35 2SD592
Q38 2SA684
Q40 2SB709
Q41 UN2115
Q42 2SD601
Q39 2SD601
Q43 2SB709
Q97 UN2213
Q96 UN2213
Q121
Q122
2SC2204C × 2
Q123 2SC2295
IC 20 VCR0153
Q83 2SK198
Q84 2SB709
Q84 2SD601
Q85 2SD592
Q95 2SD601
C. OUT LEVEL
C. LIMIT LEVEL
TP9
TP10
TP11
TPG1
TPG2
TP12
TP13
TP15
TP16
TP18
TP19
TP20
TP25
10
11
12
13
14
15
16
17
18
19
20
21
22

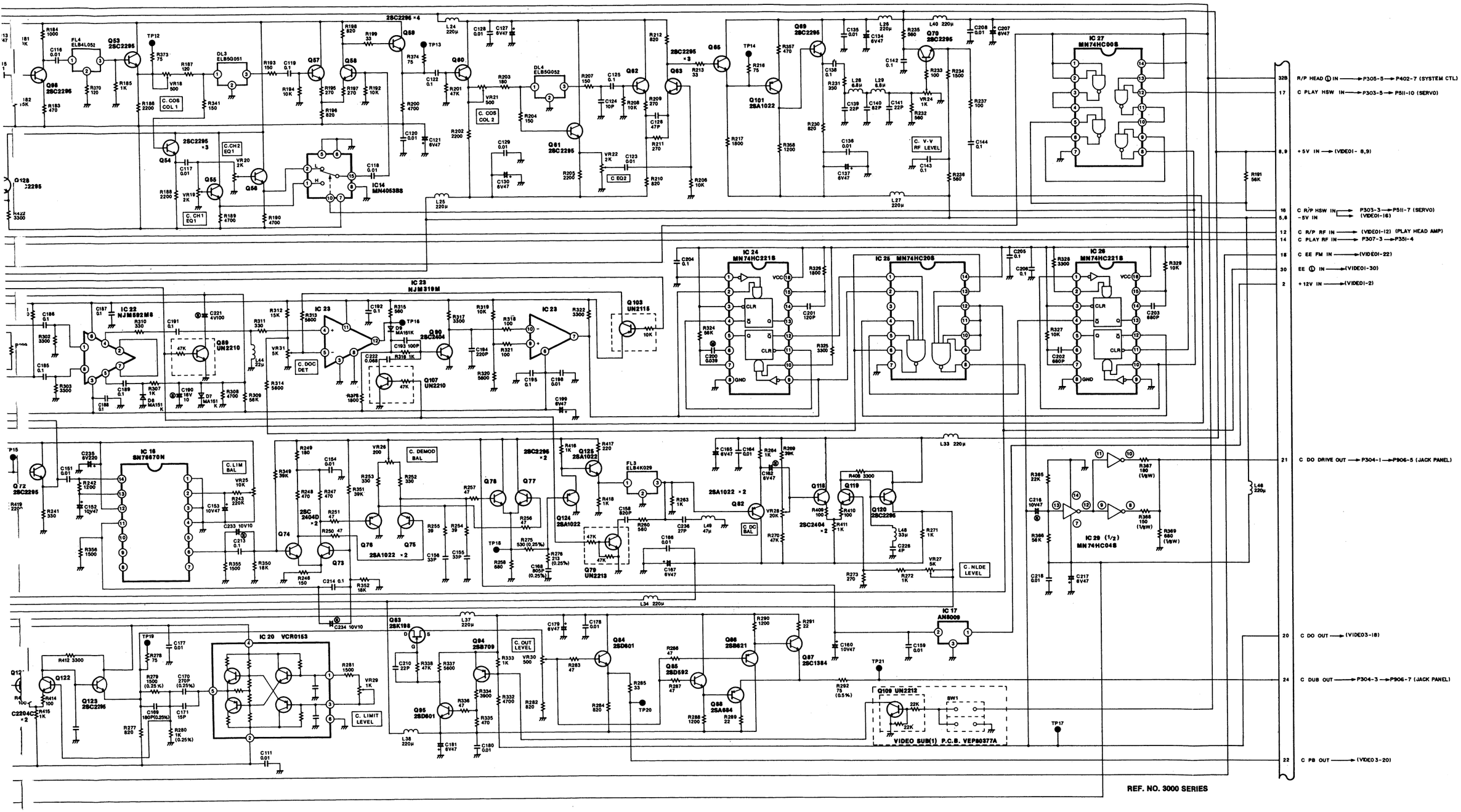
IC 27 MN74HC00S
IC 24 MN74HC221S
IC 25 MN74HC20S
IC 26 MN74HC221S
IC 23 NJM319M
IC 22 NJM592M8
IC 16 SN76670N
IC 20 VCR0153
IC 17 AN8009
IC 29 (1/2) MN74HC04S
IC14 MN4053BS
Q53 2SC2295
Q54 2SC2295 ×3
Q55
Q56
Q57
Q58
Q59 2SC2295 ×4
Q60
Q61 2SC2295
Q62
Q63 2SC2295 ×3
Q65
Q69 2SC2295
Q70 2SC2295
Q101 2SA1022
Q89 UN2210
Q90 2SC2404
Q103 UN2115
Q107 UN2210
Q109 UN2212
Q72 2SC2295
Q73
Q74
Q75
Q76 2SA1022 ×2
Q78
Q77
Q79 UN2213
Q83 2SK198
Q84 2SB709
Q85 2SD592
Q86 2SB621
Q87 2SC1384
Q88 2SA684
Q95 2SD601
Q118
Q119
Q120 2SC2295
Q122
Q123 2SC2295
Q124 2SA1022
Q125 2SA1022
2SC2404 ×2
2SA1022 ×2
C. COS COL 1
C. COS COL 2
C. CH2 EQ1
C. CH1 EQ1
C EQ2
C. V-V RF LEVEL
C. DOC DET
C. LIM BAL
C. DEMOD BAL
C. OUT LEVEL
C. DC BAL
C. NLDE LEVEL
C. LIMIT LEVEL
VIDEO SUB(1) P.C.B. VEP80377A
REF. NO. 3000 SERIES
32B R/P HEAD Ⓘ IN → P305-5 → P402-7 (SYSTEM CTL)
17 C PLAY HSW IN → P303-5 → P5II-10 (SERVO)
8,9 +5V IN → (VIDEOI- 8,9)
16 C R/P HSW IN → P303-3 → P5II-7 (SERVO)
5,6 -5V IN → (VIDEOI-16)
12 C R/P RF IN → (VIDEOI-12) (PLAY HEAD AMP)
14 C PLAY RF IN → P307-3 → P35I-4
18 C EE FM IN → (VIDEOI-22)
30 EE Ⓘ IN → (VIDEOI-30)
2 +12V IN → (VIDEOI-2)
21 C DO DRIVE OUT → P304-1 → P306-5 (JACK PANEL)
20 C DO OUT → (VIDEO3-18)
24 C DUB OUT → P304-3 → P306-7 (JACK PANEL)
22 C PB OUT → (VIDEO3-20)
17 18 19 20 21 22 23 24 25 26 27

VFK0832 MODULATOR (VIDEO 2) P.C. BOARD

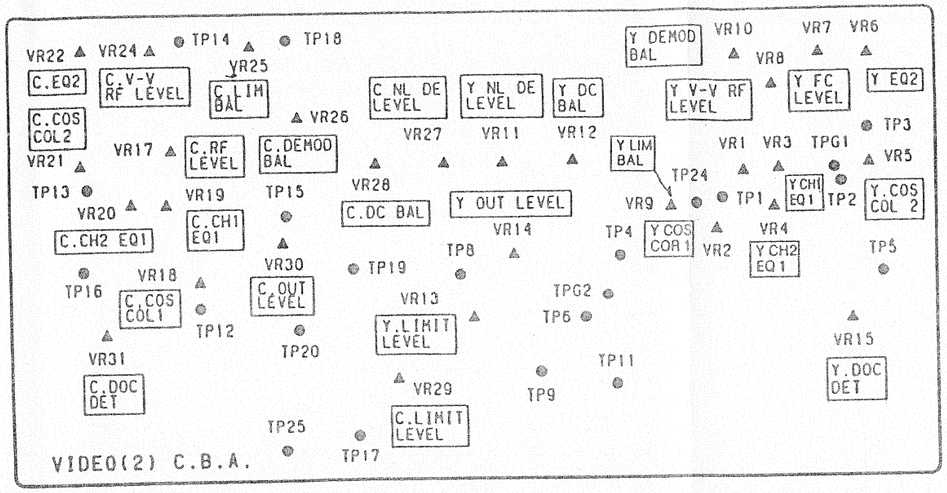

※ VIDEO 2 SUB (1) P.C.B. (VEP80377A)

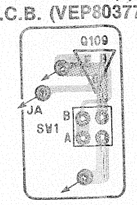

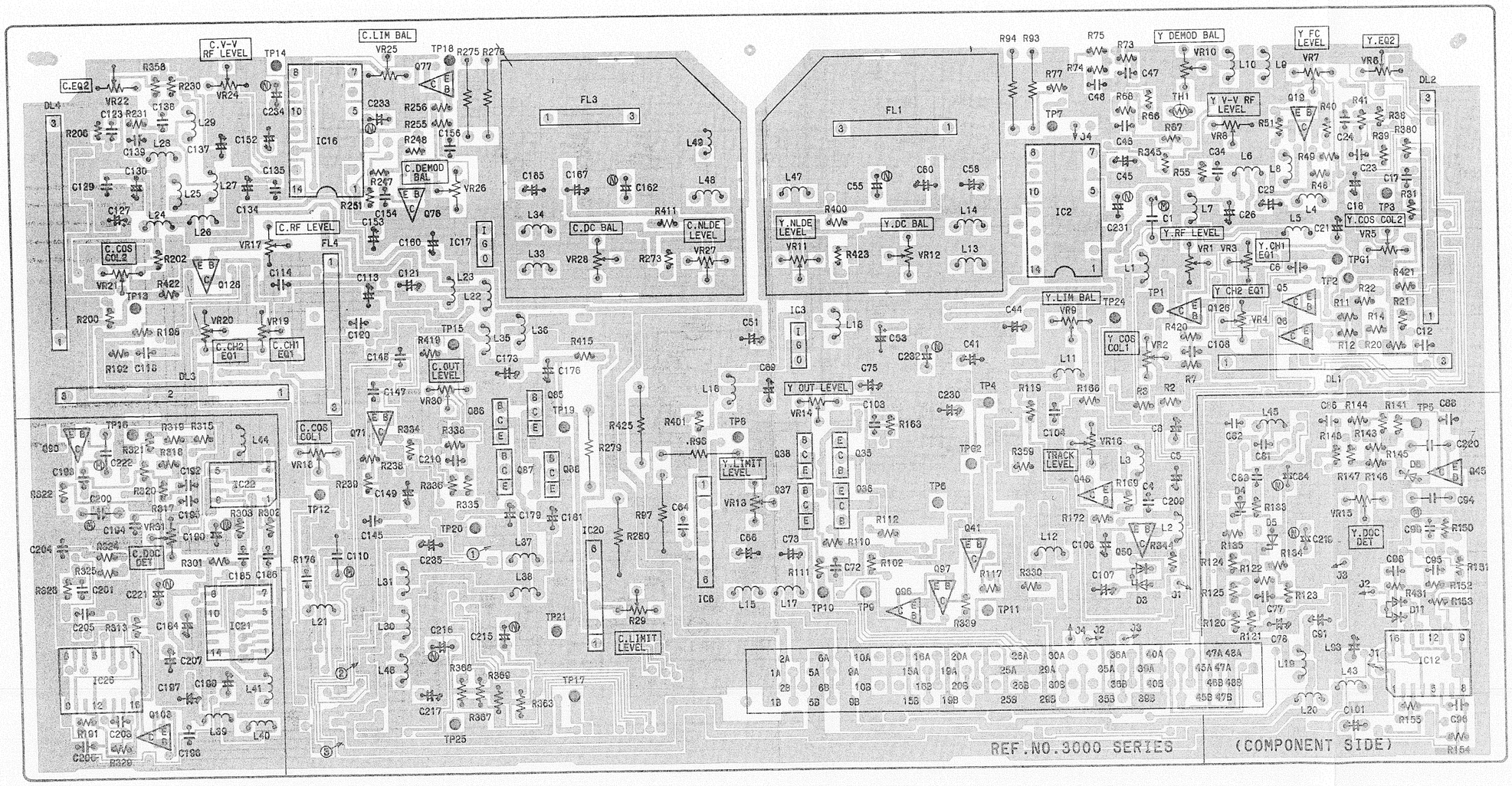

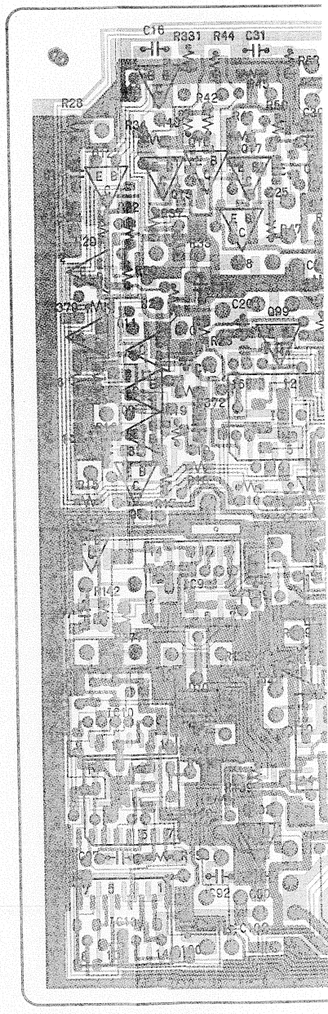

※ VIDEO 2 SUB (1)
P.C.B. (VEP80377A)

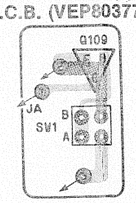

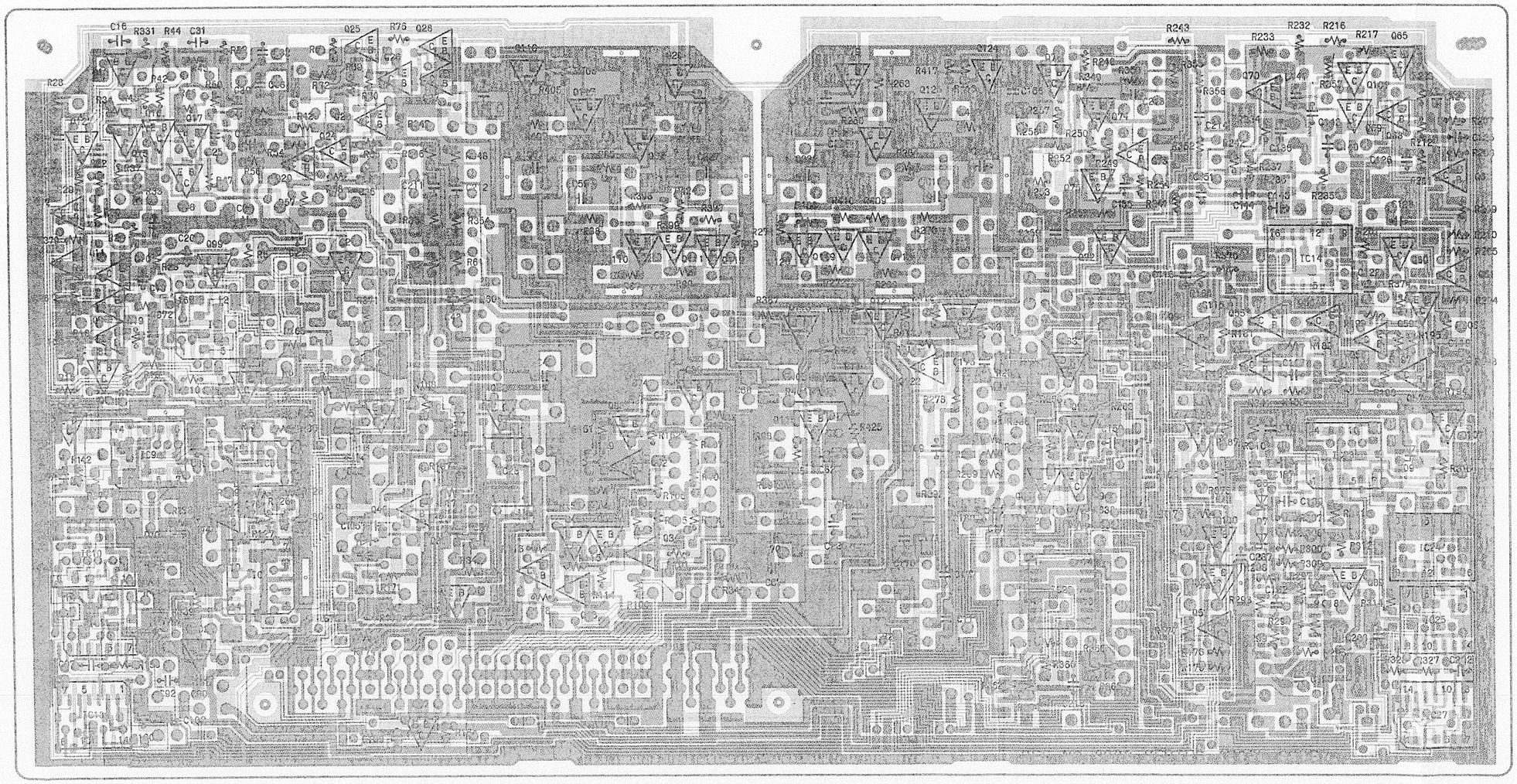

VIDEO (2) P.C.B.

Transistor			
Q3001	C-10	Q3076	C-3
Q3002	C-10	Q3077	D-3
Q3003	C-10	Q3078	D-14
Q3004	C-10	Q3079	D-13
Q3005	C-7	Q3082	D-13
Q3006	C-7	Q3083	C-14
Q3007	C-9	Q3084	B-13
Q3008	C-9	Q3085	C-3
Q3009	C-9	Q3086	B-3
Q3010	C-9	Q3087	B-3
Q3011	C-9	Q3088	B-3
Q3012	C-9	Q3089	B-15
Q3013	D-9	Q3090	B-1
Q3015	D-9	Q3092	B-12
Q3016	D-9	Q3093	B-11
Q3017	D-9	Q3094	B-14
Q3018	C-9	Q3095	B-14
Q3019	D-7	Q3096	B-5
Q3020	D-10	Q3097	B-5
Q3021	A-10	Q3098	C-14
Q3022	C-11	Q3099	C-9
Q3023	D-10	Q3100	B-14
Q3024	D-10	Q3101	D-15
Q3025	D-10	Q3102	A-9
Q3026	D-10	Q3103	A-1
Q3027	D-10	Q3106	B-9
Q3028	D-10	Q3107	B-15
Q3029	D-12	Q3109	E-9
Q3032	D-12	Q3110	C-11
Q3033	C-12	Q3111	C-12
Q3034	B-12	Q3112	C-12
Q3035	B-5	Q3113	C-12
Q3036	B-5	Q3114	C-13
Q3037	B-4	Q3115	B-12
Q3038	B-4	Q3116	D-11
Q3039	B-11	Q3117	D-11
Q3040	B-11	Q3118	C-12
Q3041	B-5	Q3119	C-12
Q3042	B-11	Q3120	C-12
Q3043	A-11	Q3121	C-12
Q3044	B-9	Q3122	C-12
Q3045	B-8	Q3123	C-12
Q3047	A-10	Q3124	D-12
Q3048	B-6	Q3125	D-13
Q3049	B-10	Q3126	C-7
Q3050	B-6	Q3127	D-9
Q3051	A-14	Q3128	C-2
Q3052	B-14	**Integrated Circuit**	
Q3053	B-14	IC3001	C-9
Q3054	C-14	IC3002	C-6
Q3055	C-14	IC3003	C-5
Q3056	C-15	IC3006	B-4
Q3057	C-15	IC3007	B-1
Q3058	C-15	IC3008	B-1
Q3059	C-15	IC3009	B-9
Q3060	C-15	IC3010	B-9
Q3061	C-15	IC3011	A-9
Q3062	D-15	IC3012	A-9
Q3063	D-15	IC3013	A-9
Q3065	D-15	IC3014	C-1
Q3069	D-15	IC3015	C-1
Q3070	D-15	IC3016	D-2
Q3071	B-2	IC3017	C-3
Q3072	C-14	IC3020	B-4
Q3073	D-14	IC3021	A-2
Q3074	D-14	IC3022	B-2
Q3075	D-14	IC3023	B-1

ADDRESS INFORMATION

SH76070N

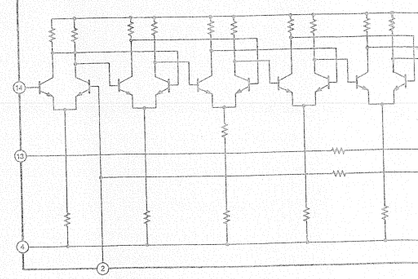

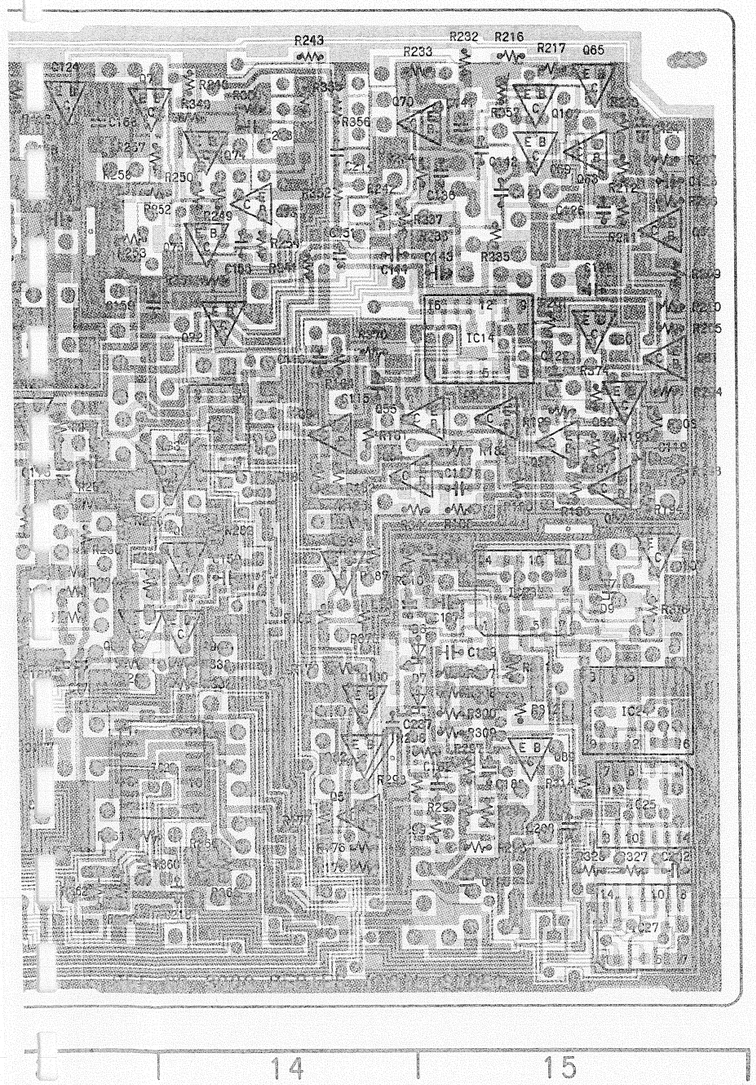

VIDEO (2) P.C.B.

Transistor	
Q3001	C-10
Q3002	C-10
Q3003	C-10
Q3004	C-10
Q3005	C-7
Q3006	C-7
Q3007	C-9
Q3008	C-9
Q3009	C-9
Q3010	C-9
Q3011	C-9
Q3012	C-9
Q3013	D-9
Q3015	D-9
Q3016	D-9
Q3017	D-9
Q3018	C-9
Q3019	D-7
Q3020	D-10
Q3021	A-10
Q3022	C-11
Q3023	D-10
Q3024	D-10
Q3025	D-10
Q3026	D-10
Q3027	D-10
Q3028	D-10
Q3029	D-12
Q3032	D-12
Q3033	C-12
Q3034	B-12
Q3035	B-5
Q3036	B-5
Q3037	B-4
Q3038	B-4
Q3039	B-11
Q3040	B-11
Q3041	B-5
Q3042	B-11
Q3043	A-11
Q3044	B-9
Q3045	B-8
Q3047	A-10
Q3048	B-6
Q3049	B-10
Q3050	B-6
Q3051	A-14
Q3052	B-14
Q3053	B-14
Q3054	C-14
Q3055	C-14
Q3056	C-15
Q3057	C-15
Q3058	C-15
Q3059	C-15
Q3060	C-15
Q3061	C-15
Q3062	D-15
Q3063	D-15
Q3065	D-15
Q3069	D-15
Q3070	D-15
Q3071	B-2
Q3072	C-14
Q3073	D-14
Q3074	D-14
Q3075	D-14
Q3076	C-3
Q3077	D-3
Q3078	D-14
Q3079	D-13
Q3082	D-13
Q3083	C-14
Q3084	B-13
Q3085	C-3
Q3086	B-3
Q3087	B-3
Q3088	B-3
Q3089	B-15
Q3090	B-1
Q3092	B-12
Q3093	B-11
Q3094	B-14
Q3095	B-14
Q3096	B-5
Q3097	B-5
Q3098	C-14
Q3099	C-9
Q3100	B-14
Q3101	D-15
Q3102	A-9
Q3103	A-1
Q3106	B-9
Q3107	B-15
Q3109	E-9
Q3110	C-11
Q3111	C-12
Q3112	C-12
Q3113	C-12
Q3114	C-13
Q3115	B-12
Q3116	D-11
Q3117	D-11
Q3118	C-13
Q3119	C-12
Q3120	C-12
Q3121	C-13
Q3122	C-13
Q3123	C-13
Q3124	D-13
Q3125	D-13
Q3126	C-7
Q3127	D-9
Q3128	C-2

Integrated Circuit	
IC3001	C-9
IC3002	C-6
IC3003	C-5
IC3006	B-4
IC3007	B-10
IC3008	B-10
IC3009	B-9
IC3010	B-9
IC3011	A-9
IC3012	A-8
IC3013	A-9
IC3014	C-15
IC3015	C-14
IC3016	D-2
IC3017	C-3
IC3020	B-4
IC3021	A-2
IC3022	B-2
IC3023	B-15
IC3024	B-15
IC3025	A-15
IC3026	A-1
IC3027	A-15
IC3028	B-11
IC3029	B-14

Test Point	
TP3001	C-6
TP3002	C-7
TP3003	C-7
TP3004	C-5
TP3005	B-8
TP3006	B-5
TP3007	D-8
TP3008	B-4
TP3009	A-5
TP3010	A-5
TP3011	A-6
TP3012	B-2
TP3013	C-1
TP3014	D-2
TP3015	C-3
TP3016	B-1
TP3017	A-3
TP3018	D-3
TP3019	B-3
TP3020	B-3
TP3021	A-3
TP3024	C-6
TP3025	A-3
TPG3001	C-7
TPG3002	B-5

Adjustement	
VR3001	C-7
VR3002	C-6
VR3003	C-7
VR3004	C-7
VR3005	C-7
VR3006	D-7
VR3007	D-7
VR3008	D-7
VR3009	C-6
VR3010	D-6
VR3011	C-5
VR3012	C-5
VR3013	B-4
VR3014	B-5
VR3015	B-7
VR3016	B-6
VR3017	C-2
VR3018	B-2
VR3019	C-2
VR3020	C-2
VR3021	C-1
VR3022	D-1
VR3024	D-2
VR3025	D-3
VR3026	D-3
VR3027	C-4
VR3028	C-4
VR3029	A-4
VR3030	C-3
VR3031	B-1

ADDRESS INFORMATION

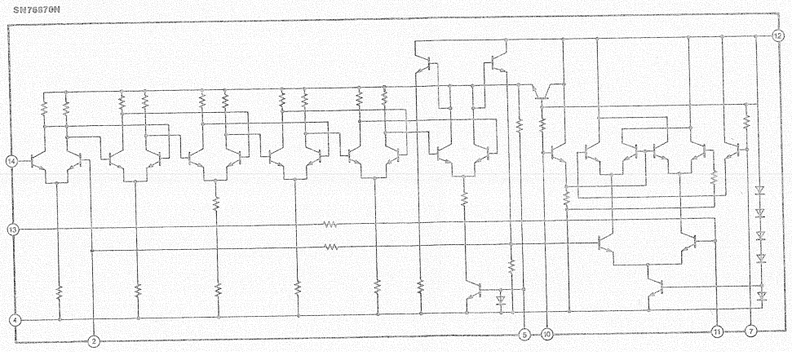

VIDEO 2 WAVEFORMS

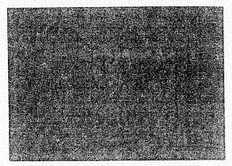

TP1 PLAY
100 mV/2 msec. div.

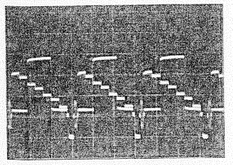

TP9
500 mV/20 µsec. div.

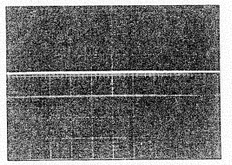

TP16 PLAY
500 mV/5 msec. div.

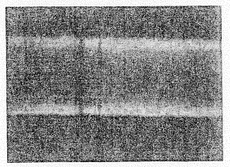

TP2 PLAY
100 mV/2 msec. div.

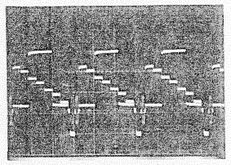

TP10
500 mV/20 µsec. div.

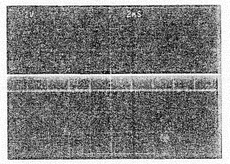

TP18 PLAY
2 V/2 msec. div.

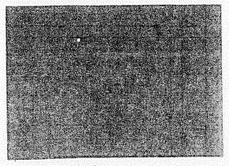

TP3 PLAY
100 mV/2 msec. div.

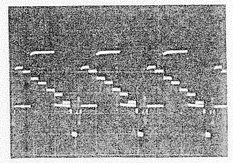

TP11
500 mV/20 µsec. div.

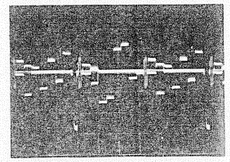

TP19
500 mV/10 µsec. div.

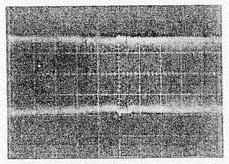

TP4 PLAY
100 mV/2 msec. div.

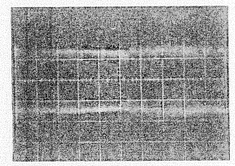

TP12 PLAY
100 mV/2 msec. div.

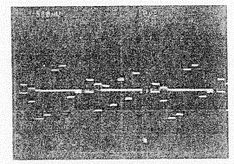

TP20
500 mV/10 µsec. div.

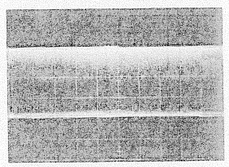

TP5 PLAY
500 mV/2 msec. div.

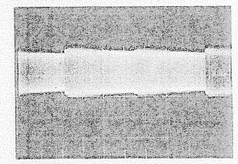

TP13 PLAY
200 mV/5 msec. div.

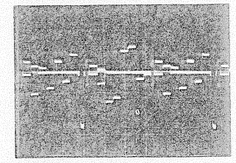

TP21
500 mV/10 µsec. div.

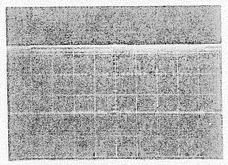

TP7 PLAY
500 mV/2 msec. div.

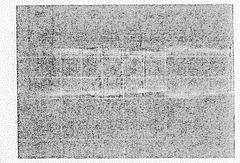

TP14 PLAY
200 mV/5 msec. div.

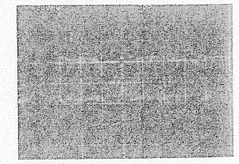

TP24
200 mV/5 msec. div.

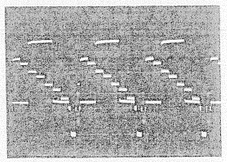

TP8
500 mV/20 µsec. div.

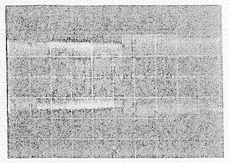

TP15 PLAY
100 mV/2 msec. div.

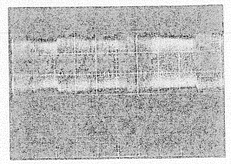

TP25
500 mV/5 msec. div.

VFK0832 AZIMUTH & DETECTION P.C. BOARD

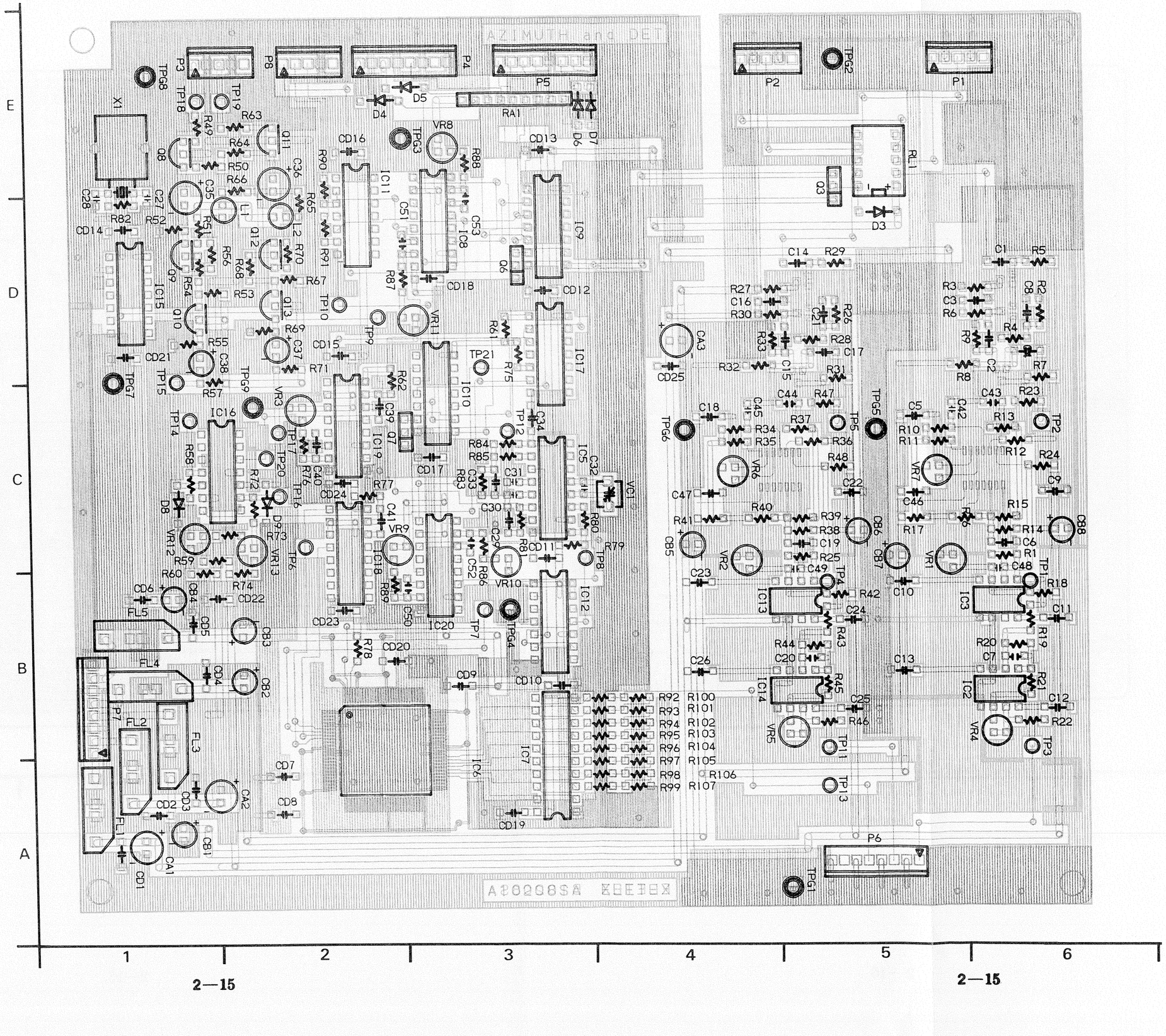

VFK0832 HEAD AMP P.C. BOARD

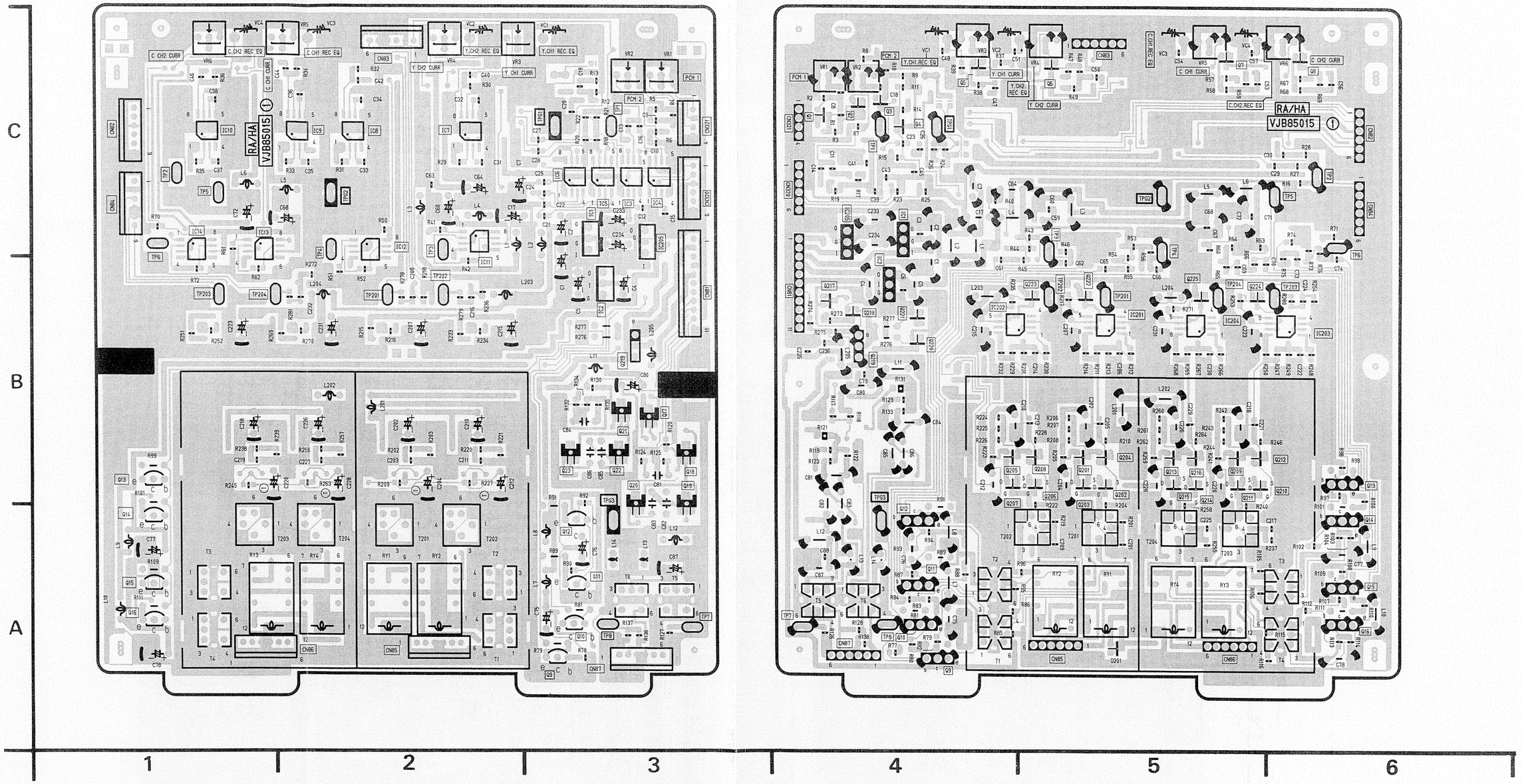

VFK0832 POWER SUPPLY P.C. BOARD

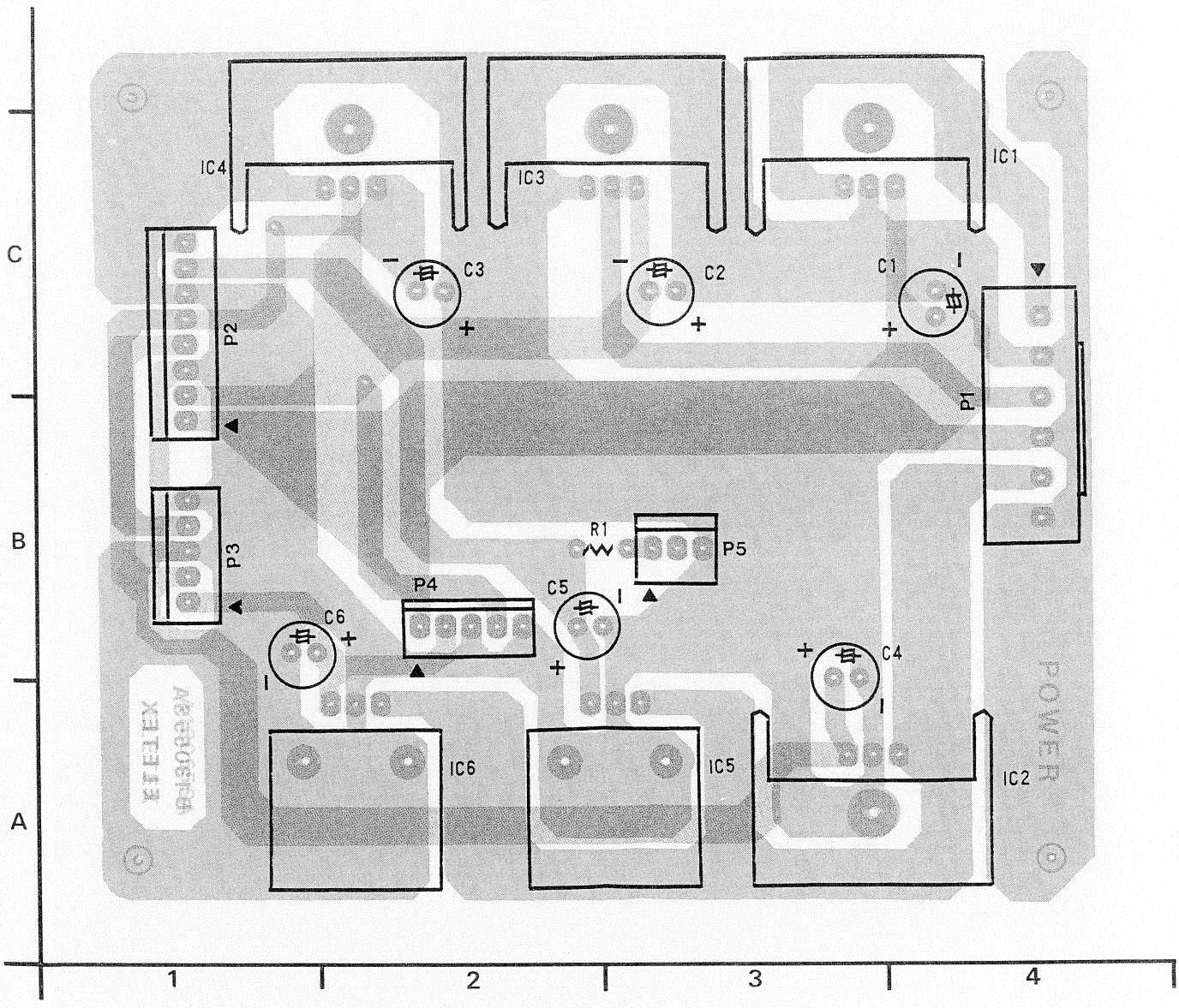

Technical
Descriptions

Panasonic
Broadcast Systems

ORDER NO. VSD9106M003-1
D5

Technical Guide

Vol 1-2

AJ-D350

1/2" DIGITAL

(PAL/NTSC)

This Technical Guide describes the Format, Mechanism and Theory of Operation of the AJ-D350.
This Technical Guide is written as basic guidance for both sales and service staff.

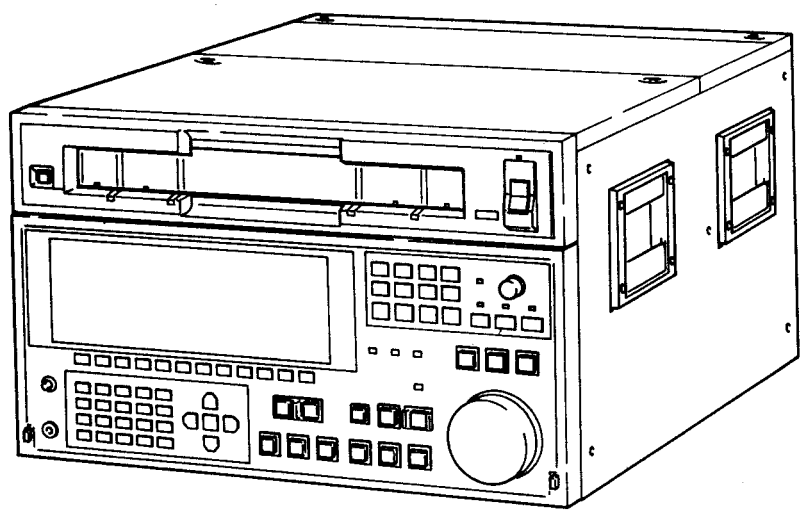

Panasonic

Matsushita Electric Industrial Co., Ltd.
Audio and Video Systems Division

Contents

1. Specification ---------- 2
2. Introduction ---------- 6
3. Tape Format ---------- 7
4. Structure of Head ---------- 9
5. Cassette Tape ---------- 10
6. Mechanism ---------- 11
7. Audio Video Overall ---------- 17
8. Error Correction and Error Concealment ------ 20
9. PCM Audio Error Correction ---------- 21
10. Video Circuit ---------- 22
11. Audio Circuit ---------- 39
12. System Control and Front Panel ---------- 45
13. Servo Circuit ---------- 50
14. Auto Tracking ---------- 58
15. Diagnostics Overview ---------- 65

1-1. Specifications (PAL)

PAL

General

Power requirement:	AC 100 to 120V, AC 200V to 240V ± 10% 50/60 Hz
Power consumption:	Max 450W
Operating Temperature:	5°C to 40°C (41°F to 104°F)
Humidity:	10% to 90% (non-condensing)
Weight:	Approx. 48kg (106lbs)
Dimensions:	Approx. 424 (W) x 265 (H) x 667 (D) mm Including handles and feet
Recording format:	D3 (1/2" DIGITAL)
Tracks/channels:	Digital video and audio(4 channels):8 tracks/field
Analog audio (cue):	1 track
	Time code: 1 track
CTL:	1 track
Tape speed:	83.88mm/sec
Writing speed:	23.79m/sec
(Relative speed)	
Record time (max):	S cassette 50 min. (14μm) 64 min. (11μm) M cassette 95 min. (14μm) 125 min. (11μm) L cassette 185 min. (14μm) 245 min. (11μm)
note : 11μm tape will be shipped after middle of 1992.	
Cassette type:	1/2" Digital cassette (S, M or L)
Recommended tape:	Metal (1,500 Oe) tape or AJ-TD series
Servo lock:	within 1.5 sec (with color frame capstan servo lock mode from stand by mode)
Tape timer accuracy:	±1 frames (with continuous CTL signal)
Edit accuracy:	±0 frames (with time code)
Error correction:	Correction and concealment (Reed-Solomon code)
Fast forward/rewind time:	Within 90 sec. (with 90 minute tape)
Load/unload time:	Within 5 sec.
Cueing:	Within 5 sec. (30 sec. spot)

VIDEO

Video signal:	Composite Video
Sampling Frequency:	4 Fsc, 17.73 MHz
Quantization:	8 bit/135, 45, -45, -135 degrees sampling
Channel coding:	New 8 to 14 modulation
Recorded Samples/Line:	948
Recorded Lines/Field:	304
Frequency range:	25Hz to 6.0MHz ±0.5dB at 7.5MHz 0dB/-3dB
S/N ratio:	54 dB
Differential gain:	less than 2 %
Differential phase:	less than 1°
Moire:	0
Y/C delay:	less than 15 nsec
Tilt(Horizontal&Vertical):	Less than 1%
Low frequency linearity:	Less than 2% (including quantization noise)
K Factor:	Less than 1% (2T pulse)
Output SCH phase:	Based upon CCIR 624-3
Input level adjustable range:	± 3 dB (analog input only)
Out put adjustment	
Video Gain:	-∞ to + 3 dB
Chroma Gain:	-∞ to + 3 dB
Chroma Phase:	± 15 degrees
Setup:	± 15 IRE
Video Phase:	± 1.8 μsec (280 nsec/step)
SC Phase :	more than 360 degrees

Spacifications subject to change without notice.

PAL

DIGITAL AUDIO (DA 1 to 4 channels)

PAL

Sampling Frequency:	48 kHz (synchronized to video)
Quantization:	20 bit/sample
Frequency characteristic:	20Hz to 20kHz ±0.5 dB
Dynamic range:	More than 95 dB (at 1kHz, emphasis off "A" weighted)
Distortion:	Less than 0.03% (at 1kHz, emphasis OFF operating level)
Crosstalk:	Less than -80 dB (at 1kHz, between any two channels)
Wow & Flutter:	Below measurable limit
Headroom:	20 dB
Operating level:	+8, +4, 0, -20 dBu selectable (LINE IN/OUT)
Emphasis:	T_1=50µsec,/ T_2=15µsec (ON/OFF selectable)
Input/ output gain range:	-∞ to +12 dB

Analog audio (Cue track)

Frequency response:	100Hz to 12kHz ±3 dB
S/N ratio:	Better than 44dB (at 1 kHz, 3% distortion)
Distortion	Less than 2% (1KHz reference signal)
Wow & flutter:	Less than 0.15% (DIN weighted)
Operating level:	+8, +4, 0, -20dBu(LINE IN/OUT), -60 dBu (LINE IN) selectable
Input/output gain range:	-∞ to +12 dB

Input/output signal

Video

Input		
Analog:	1.0 ± 0.3Vp-p, 75ohms	(BNC)
Digital:	10 bit parallel	(25P)
Reference:	Composite (Black burst) signal	(BNC)
	Sync & burst 0.3 Vp-p, 75ohms	(BNC)
Output		
Analog:	VIDEO1 (VBS/VB/VS/V switchable)	(BNC)
	VIDEO2 (VBS)	(BNC)
	VIDEO3 (Character ON/OFF)	(BNC)
Digital:	10 bit parallel	(25P)

Audio

Input		
Analog (CH1,2,3,4):	Max. +28 dBu 150 ohms/600 ohms/high impedance switchable	(XLR)x4
Digital (CH1/2,3/4):	AES/EBU format	(XLR)x2
Cue Line in:	Max. +18 dBu 150 ohms/600 ohms/high impedance switchable	(XLR)
Output		
Analog (CH1,2,3,4):	Max. +28 dBu low impedance	(XLR)x4
Digital (CH1/2,3/4):	AES/EBU format	(XLR)x2
Cue:	Max. +18 dBu low impedance	(XLR)x1
Monitor L/R:	Max, +24 dBu low impedance	(XLR)x2
Headphones:	Variable level control by VR	(M6)

General

Colour Frame pulse in/out:	TTL level	(BNC)
WFM out:	75 ohms Video/CTL/RF ENV CH0 or ENV CH1)	(BNC) (selectable)
Time code		
Input:	2.4V ± 1.4Vp-p,10k ohms, balanced	(XLR)
Output:	2.4Vp-p, low impedance, balanced	(XLR)
Remote		
Remote-in:	For 9-pin RS-422A interface	(9pin)
Remote-out:	For 9-pin RS-422A interface	(9pin)
Remote-in/out:	For 9-pin RS-422A interface	(9pin)
RS-232C:	For RS-232C interface	(25pin)
GP-IB:	For GP-IB (IEEE-488) interface	(25pin)
Parallel I/O:	For parallel communication	(50pin)
V/A control:	For video and audio remote control	(15pin)
AUX:	For future use (not used)	(15pin)

PAL

1-2. Specifications (NTSC)

General

Power requirement:	AC 100 to 120V, AC 200V to 240V ± 10% 50/60 Hz
Power consumption:	Max 450W
Operating Temperature:	5°C to 40°C (41°F to 104°F)
Humidity:	10% to 90% (non-condensing)
Weight:	Approx. 48kg (106lbs)
Dimensions:	Approx. 424 (W) x 265 (H) x 667 (D) mm Including handles and feet
Recording format:	D3 (1/2" DIGITAL)
Tracks/channels:	Digital video and audio(4 channels):6 tracks/field
Analog audio (cue):	1 track
Time code:	1 track
CTL:	1 track
Tape speed:	83.88mm/sec
Writing speed:	21.4m/sec
(Relative speed)	
Record time (max):	S cassette 50 min. (14μm) 64 min. (11μm) M cassette 95 min. (14μm) 125 min. (11μm) L cassette 185 min. (14μm) 245 min. (11μm)
note: 11μm tape will be shipped after middle of 1992.	
Cassette type:	1/2" Digital cassette (S, M or L)
Recommended tape:	Metal (1500 Oe) tape or AJ-TD series
Servo lock time:	Within 1.0 sec (with color frame capstan servo lock mode from stand by mode)
Tape timer accuracy:	±1 frames (with continuous CTL signal)
Edit accuracy:	±0 frames (with time code)
Error correction:	Correction and concealment (Reed-Solomon code)
Fast forward/rewind time:	Within 90 sec. (with 90 minute tape)
Load/unload time:	Within 5 sec.
Cueing:	Within 5 sec. (30 sec. spot)

VIDEO

Video signal:	Composite Video
Sampling Frequency:	4 Fsc, 14.32 MHz
Quantization:	8 bits/123, 33, −57, −147 (I, Q axis sampling) degrees
Channel coding:	New 8 to 14 modulation
Recorded Samples/Line:	768
Recorded Lines/Field:	255
Frequency characteristic	30Hz to 5.5MHz ±0.5dB at 6.2MHz 0dB/-3dB
S/N ratio:	54 dB
Differential gain:	less than 2 %
Differential phase:	less than 1°
Moire:	0
Y/C delay:	less than 15 nsec
Tilt(Horizontal&Vertical):	Less than 1%
Low frequency linearity:	Less than 2% (including quantization noise)
K Factor:	Less than 1%
Output SCH phase:	Based upon RS-170A
Input level adjustable range:	± 3 dB (analog input only)

Output Adjustment

Video Gain:	-∞ to + 3 dB
Chroma Gain:	-∞ to + 3 dB
Chroma Phase (Hue):	± 15 degrees
Setup:	± 15 IRE
Video Phase:	± 2.2 μsec (280 nsec/step)
SC Phase :	more than 360 degrees

Specification subject to change without notice.

DIGITAL AUDIO (DA 1 to 4 channels) NTSC

Sampling Frequency:	48 kHz (synchronized to video)
Quantization:	20 bit/ sample
Frequency characteristic:	20Hz to 20kHz ±0.5 dB
Dynamic range:	More than 95 dB (at 1kHz, emphasis off, "A" weighted)
Distortion:	Less than 0.03% (at 1kHz, emphasis OFF operating level)
Crosstalk:	Less than -80 dB (at 1kHz, between any two channels)
Wow & Flutter:	Below measurable limit
Headroom:	20 dB
Operating level:	+8, +4, 0, -20 dBm selectable (LINE IN/OUT)
Emphasis:	T_1=50μsec,/ T_2=15μsec (ON/OFF selectable)
Input/ output gain range:	-∞ to +12 dB

Analog audio (Cue track)

Frequency response:	100Hz to 12kHz ±3 dB
S/N ratio:	Better than 44dB (at 3% distortion)
Distortion:	Less than 2% (1 kHz reference signal)
Wow & flutter:	Less than 0.2% (unweighted)
Operating level:	+8, +4, 0, -20dBm (LINE IN/OUT) -60dBm (LINE IN) selectable
Input/output gain range:	-∞ to +12 dB

Input/output signal

Video

Input		
Analog:	1.0 ± 0.3Vp-p, 75 ohms	(BNC)
Digital:	RP-125X format	(25P)
Reference:	Composite (Black burst) signal	(BNC)
	Sync & burst 0.3 Vp-p, 75ohms	(BNC)
Output		
Analog:	VIDEO1 (VBS/VB/VS/V switchable)	(BNC)
	VIDEO2 (VBS)	(BNC)
	VIDEO3 (Character ON/OFF)	(BNC)
Digital:	RP-125X format	(25P)

Audio

Input		
Analog (CH1,2,3,4):	Max. +28 dBm 150 ohms/600 ohms/high impedance switchable	(XLR)x4
Digital (CH1/2,3/4):	AES/EBU format	(XLR)x2
Cue Line in:	Max. +18 dBm 150 ohms/600 ohms/high impedance switchable	(XLR)
Output		
Analog (CH1,2,3,4):	Max. +28 dBm low impedance	(XLR)x4
Digital (CH1/2,3/4):	AES/EBU format	(XLR)x2
Cue:	Max. +24 dBm low impedance	
Monitor L/R:	Max, +24 dBm low impedance	(XLR)x2
Headphones:	Variable level control by VR	(M6)

General

Color Frame pulse in/out:	TTL level	(BNC)
Wave Form Monitor out:	75 ohms Video/CTL/RF ENV CH0 or ENV CH1) (selectable)	(BNC)
Time code		
Input:	2.4V ± 1.4Vp-p,10k ohms, balanced	(XLR)
Output:	2.4Vp-p, low impedance, balanced	(XLR)
Remote		
Remote-in:	For 9-pin RS-422A interface	(9pin)
Remote-out:	For 9-pin RS-422A interface	(9pin)
Remote-in/out:	For 9-pin RS-422A interface	(9pin)
RS-232C:	For RS-232C interface	(25pin)
GP-IB:	For GP-IB (IEEE-488) interface	(25pin)
Parallel I/O:	For parallel communication	(50pin)
V/A control:	For video and audio remote control	(15pin)
AUX:	For future use (not used)	(15pin)

NTSC

2. Introduction of AJ-D350

New-Format Digital VTR:
Another 1/2" First

The AJ-D350 composite digital 1/2" studio VTR incorporates the outstanding advantages of the digital recording format developed by NHK. Offering a comprehensive, digital solution to dubbing-related picture and sound degradation, this new format is also at home in a number of ENG/EFP applications that are quickly bringing the all-digital VTR production system closer to reality.
The new format records digital video signals onto MII-proven 1/2" cassette tapes with more than double the recording density of the other digital formats and four channels of PCM sound. New 8-14 modulation channel coding and advanced error correction are two more reasons why input/output performance of AJ-D350 is at least comparable to existing digital formats.
The all-digital VTR system is fast approaching, with development proceeding on a complete range of production equipment, from one piece camera recorders to cart machines.
The introduction of the AJ-D350 marks the first milestone.

3. Tape Format

The rotary record heads record 2 digital video and 4 PCM audio sections. Linear tracks for Time Code, Control and a Cue Track signal are recorded by the A.C.E head. The tape wrap angle is 191 degrees and the effective record wrap angle is 178.1 degrees. PAL makes four rotations per frame, producing 8 pairs of tracks. NTSC makes three rotations, producing 6 pairs of tracks. One cycle of the CTL signal is recorded for every two pairs of tracks. The CTL duty cycle is modified to identify the frame and the colour framing sequence. The following table shows the relationship of the CTL duty cycle, field sequence and recorded tracks. Independent Insert Edit recording can be performed on the video and PCM audio tracks. Analog audio signals can be recorded on the Cue track, the Cue track frequency response is 100 Hz to 12kHz ± 3dB.

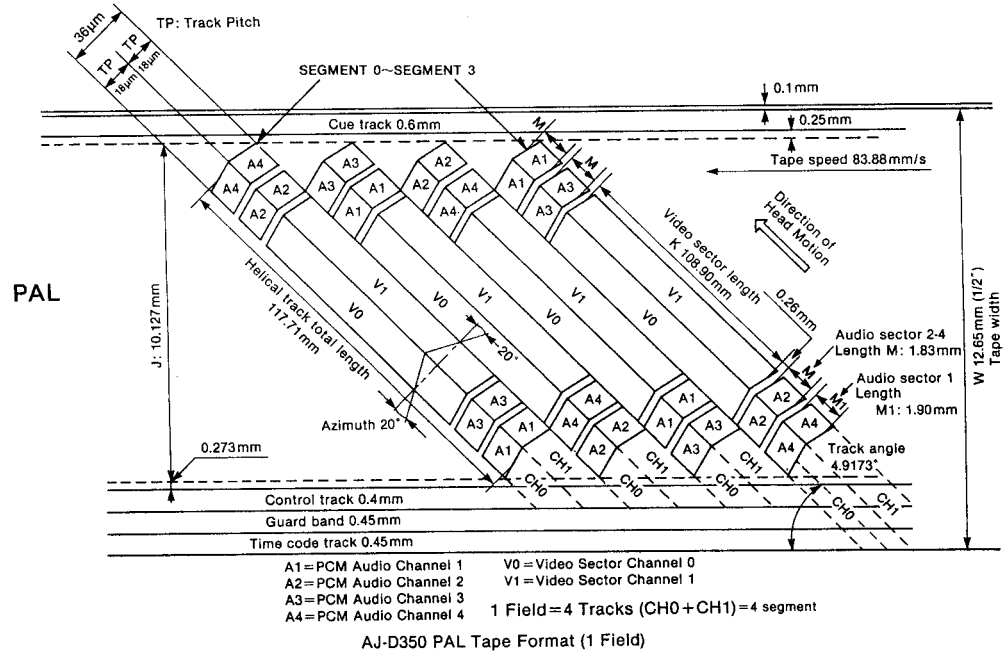

AJ-D350 PAL Tape Format (1 Field)

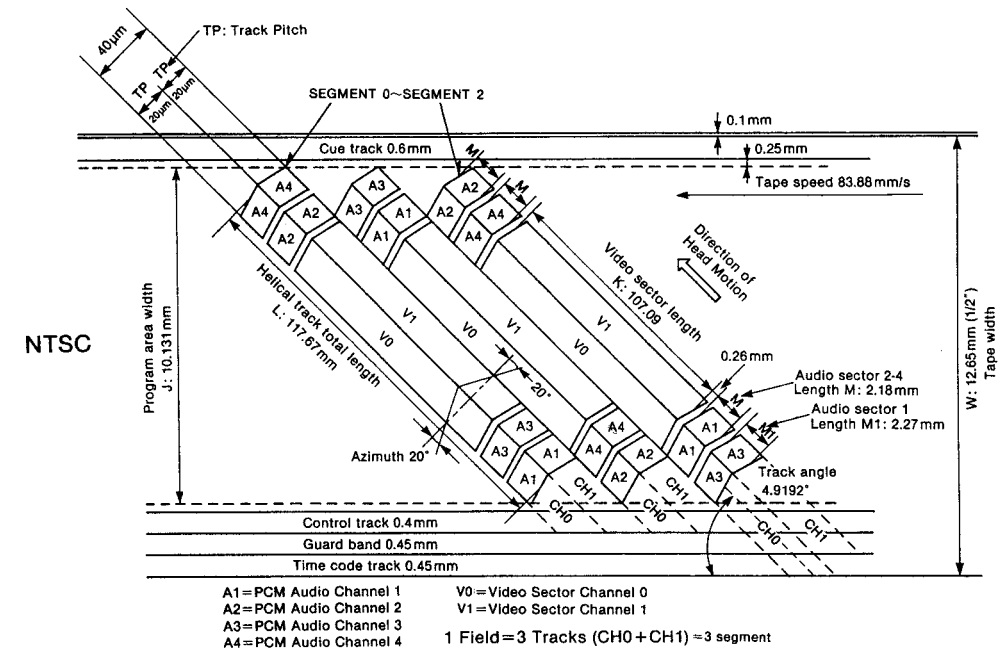

AJ-D350 NTSC Tape Format (1 Field)

Fig. 1 Tape Format

NTSC

Field	Pair Track	CTL Duty
Ⅰ, Ⅱ	1, 2	5 : 5
	3, 4	5 : 5
	5, 6	4 : 6
Ⅲ, Ⅳ	1, 2	5 : 5
	3, 4	5 : 5
	5, 6	6 : 4

PAL

Field	Pair Track	CTL Duty
Ⅰ, Ⅱ	1, 2	5 : 5
	3, 4	5 : 5
	5, 6	5 : 5
	7, 8	4 : 6
Ⅲ, Ⅳ	1, 2	5 : 5
	3, 4	5 : 5
	5, 6	5 : 5
	7, 8	4 : 6
Ⅴ, Ⅵ	1, 2	5 : 5
	3, 4	5 : 5
	5, 6	5 : 5
	7, 8	4 : 6
Ⅶ, Ⅷ	1, 2	5 : 5
	3, 4	5 : 5
	5, 6	5 : 5
	7, 8	6 : 4

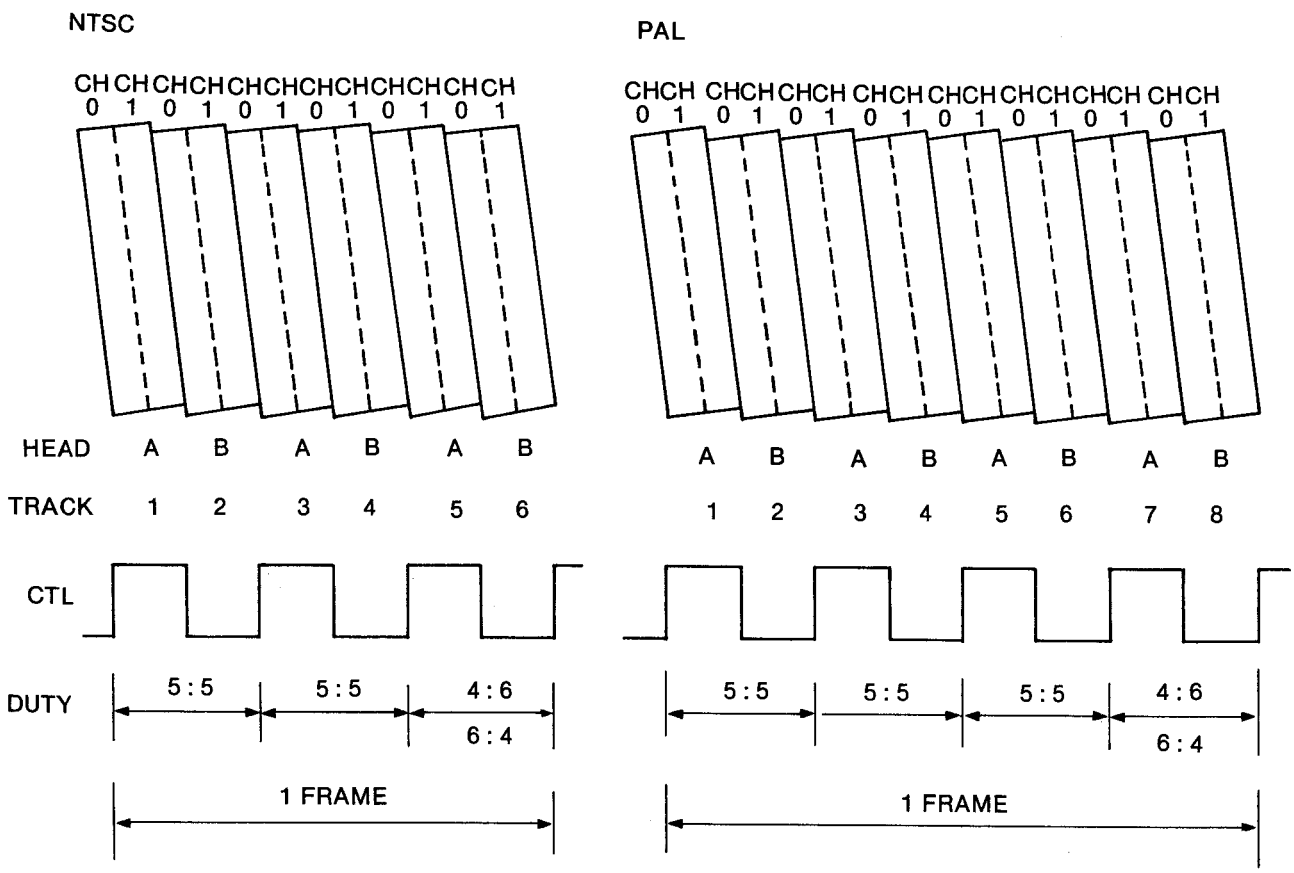

Fig. 2 Control Pulse Duty

4. Head Structure

The diameter of the drum is 76mm. The heads rotate on a scanner in between the fixed upper and lower portions of the drum assembly. The record head, consists of 4 channels. The Auto-Tracking Head provides confidence playback with the phase delayed behind the record head, and pre-read with the phase advanced before the record head. Variable Playback provides noise free pictures between the speeds of 3 times (forward) and one time (reverse). The rotary erase head, consists of 2 channels, during editing these erase previously recorded signals and produce a guard band at the edit points between the old and new recording, preventing crosstalk with neighboring tracks.

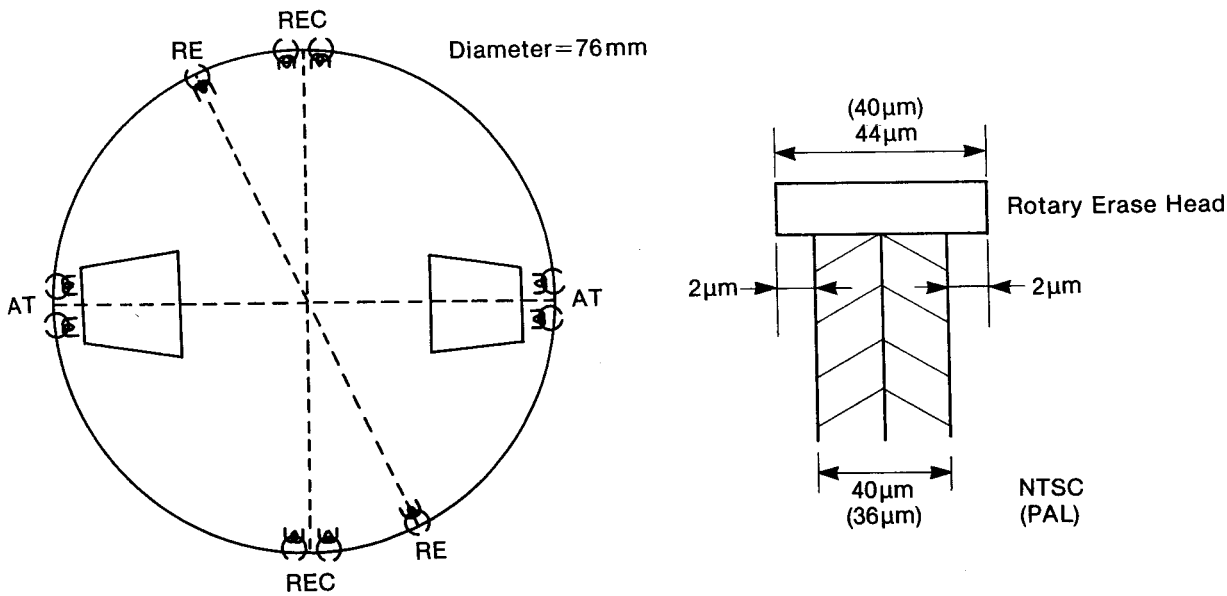

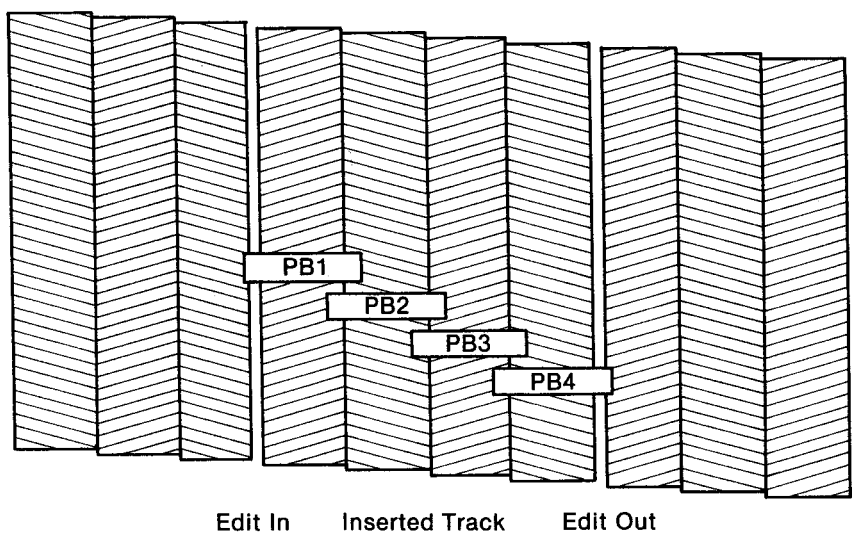

Fig. 3 Structure of Head

5. Cassette Tape

There are three sizes of cassette tapes available, S, M and L. The tapes are available two types, 14μm and 11μm thickness. The 11μm thickness will be available in 1991 and permit more tape to be loaded into the cassettes to give longer running times. Each cassette tape is provided with detection bits (tabs), A, B and C. Bit (Tab) A and B are used for prevention of accidental erasure. Bit (Tab) C is not currently used.

Fig. 1 Fig. 2 Fig. 3 Fig. 4

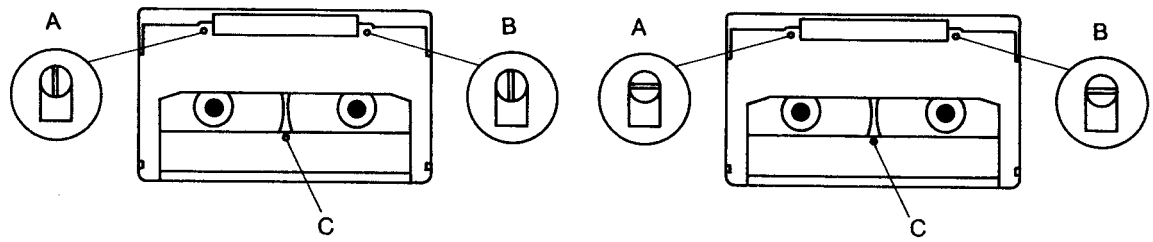

■ **Prevention of accidental erasure**

Detection bit	Recording of all signals is possible	Recording of all signals is prohibited
A (Note) Bit A takes priority over bit B.	Use an ordinary screwdriver to push down on the pin, turn it 90° to the right and set it to the "lowered" position. Fig. 1	Use the screwdriver to turn the pin 90° to the left and set it to the "raised" position. Fig. 3

Detection bit	Recording of all signals is possible	Recording of video, control signal is prohibited
B (Note) Valid only when bit A is in Fig. 1 position.	Use an ordinary screwdriver to push down on the pin, turn it 90° to the right and set it to the "lowered" position. Fig. 2	Use the screwdriver to turn the pin 90° to the left and set it to the "raised" position. Fig. 4

	NEW 1/2" D-VTR					
	S CASSETTE		M CASSETTE		L CASSETTE	
CASSETTE SIZE (mm)	161×98×25		121×124×25		296×167×25	
RECORDING TIME(min)	50	64	95	125	185	245
DRUM DIAMETER (mm)	76					
NO OF ROTATION (rpm)	5400/NTSC 6000/PAL					
TAPE SPEED (mm/s)	83.88					
TRACK PITCH (μ)	20.0/NTSC 18.0/PAL					
TAPE THICKNESS (μ)	14.0	11.0	14.0	11.0	14.0	11.0
TAPE WIDTH (mm)	12.65					
TAPE LENGTH (m)	254	330	481	632	936	1240

Fig. 4 Cassette Tape

6. Mechanism

1). Motor and Solenoid

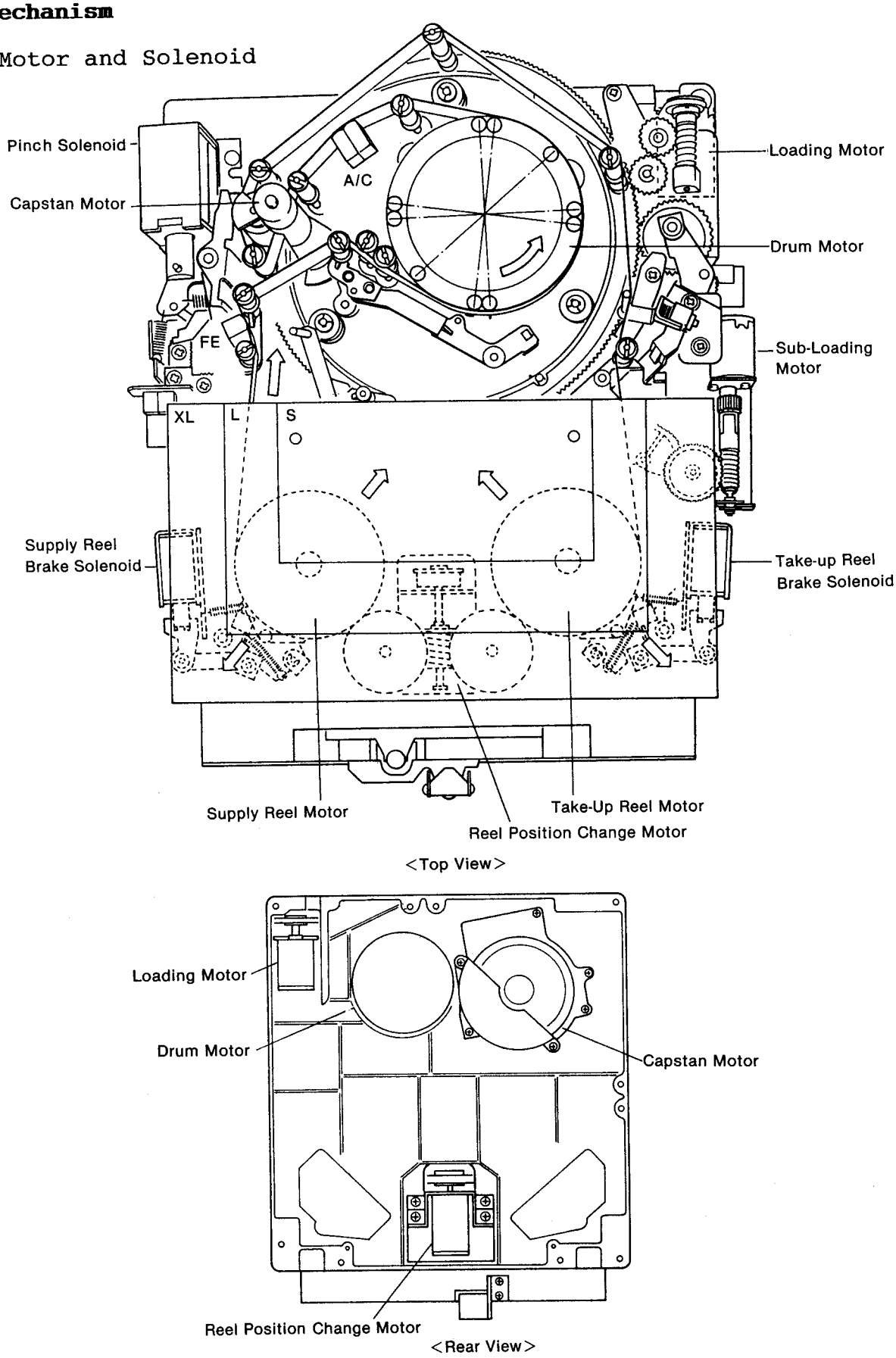

Fig. 5 Mechanism

2). Tape Transport system and Head Assignment

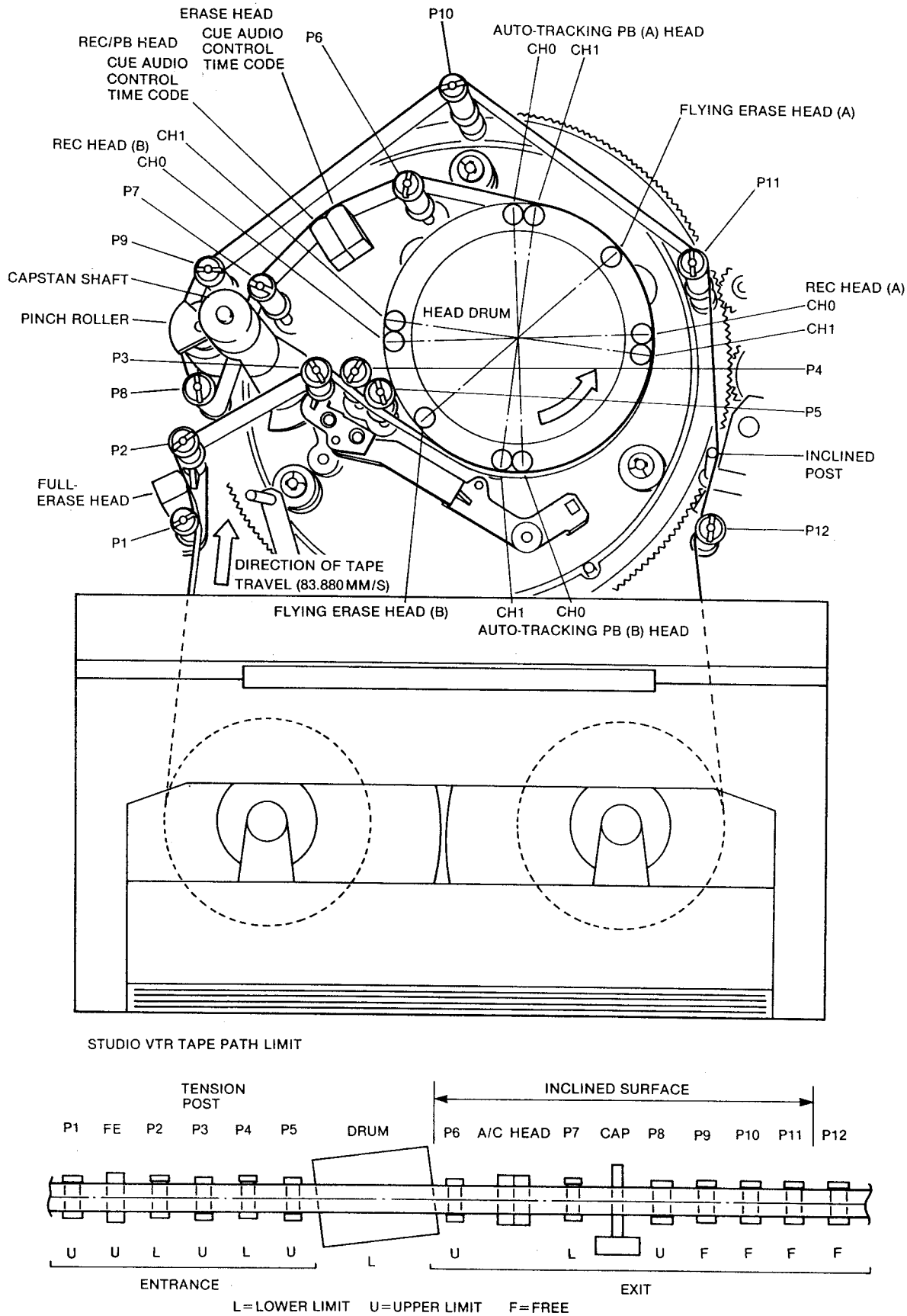

Fig. 6 Tape Transport

DRUM MOTOR

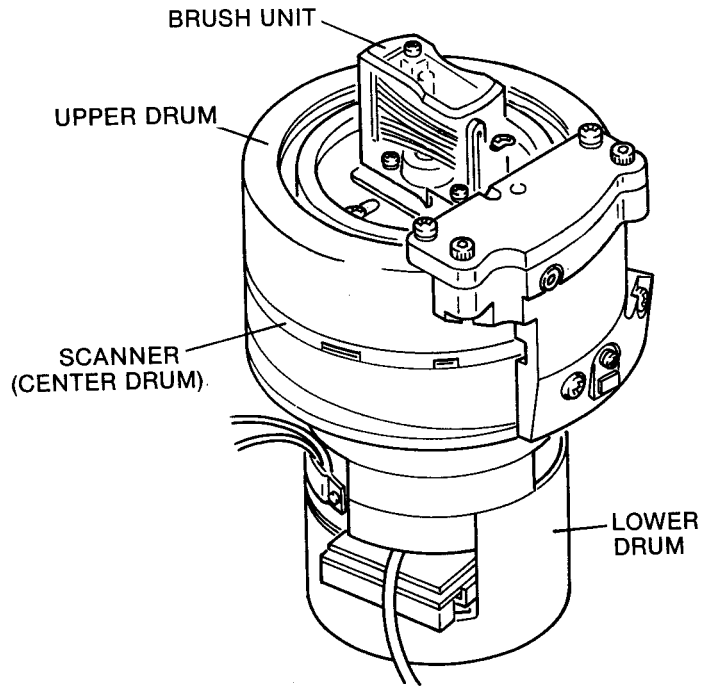

Fig. 7 Drum Motor

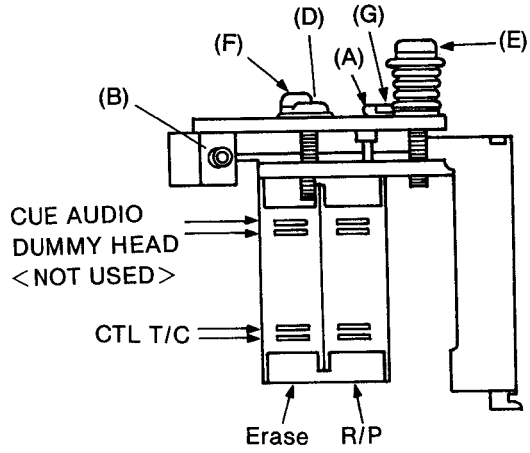

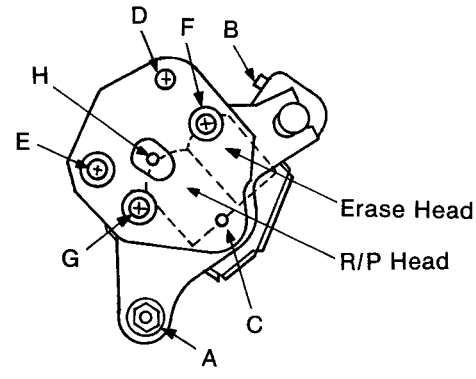

A/C Head

Purpose of each screws
A: Tilt Adjustment
B: Fix for A/C Head Height
C: Height Adjustment
D: Coarse Azimuth Adjustment
E: Spring Tension and Fine Azimuth Adjustment
F, G: Fix for A/C Head Horizontal Position
H: Horizontal Position Adjustment Hole

Fig. 8 A/C Head

3). Sensors

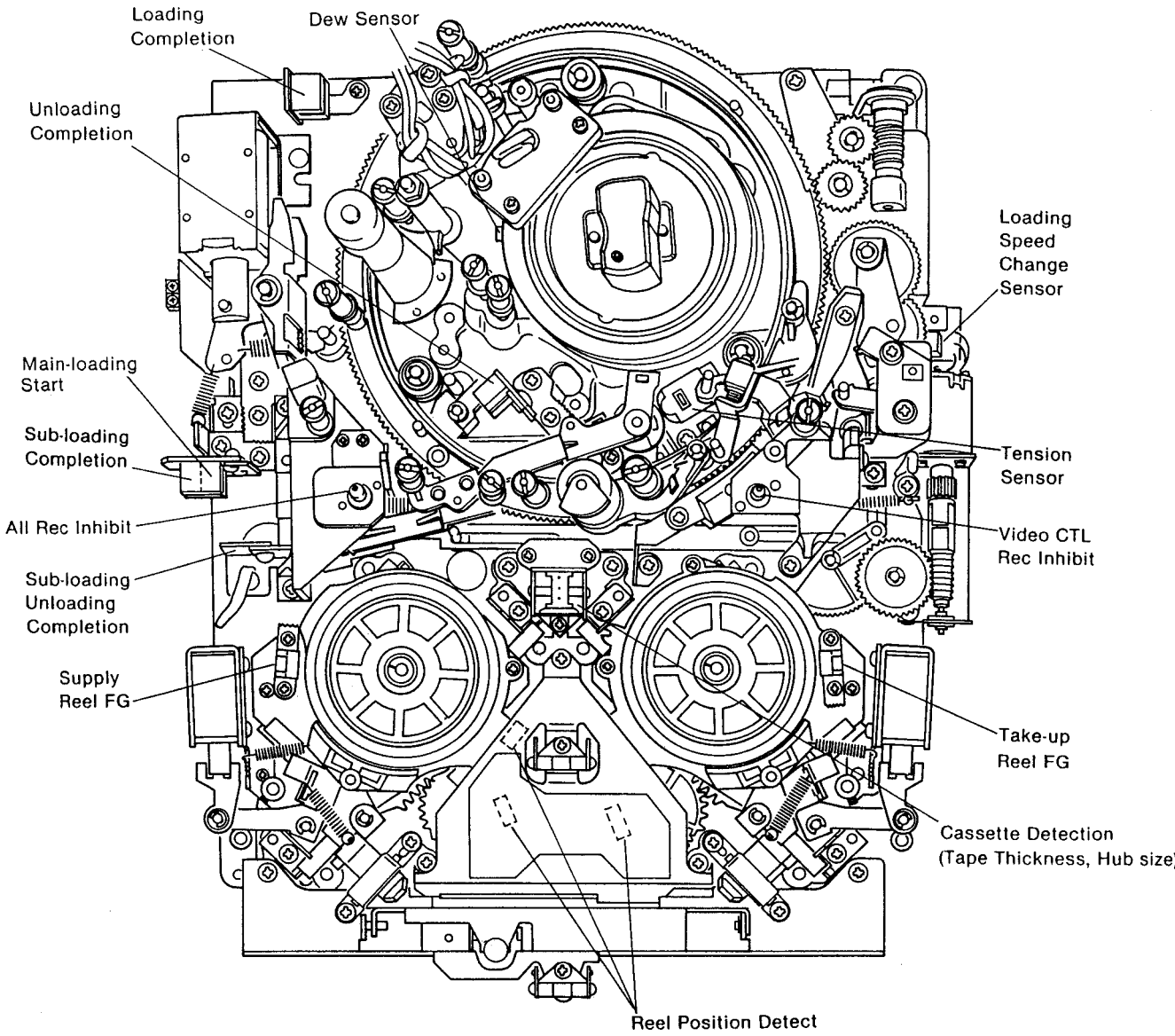

Fig. 9 Sensors of Mechanism

4). Cassette Compartment

The cassette compartment will accommodate Small, Mediam and Large cassettes without an adapter. M and L cassettes are detected by switches in the cassette compartment. If neither of these switches is operated, the presence of a Small cassette is assumed.

The cassettes are positioned by the use of cassette guides - The S cassette is inserted between the guides, the M and L cassettes depress sensors which determine the tape size.
The front loading motor can be rotated manually to release the tape in the event of a power loss.

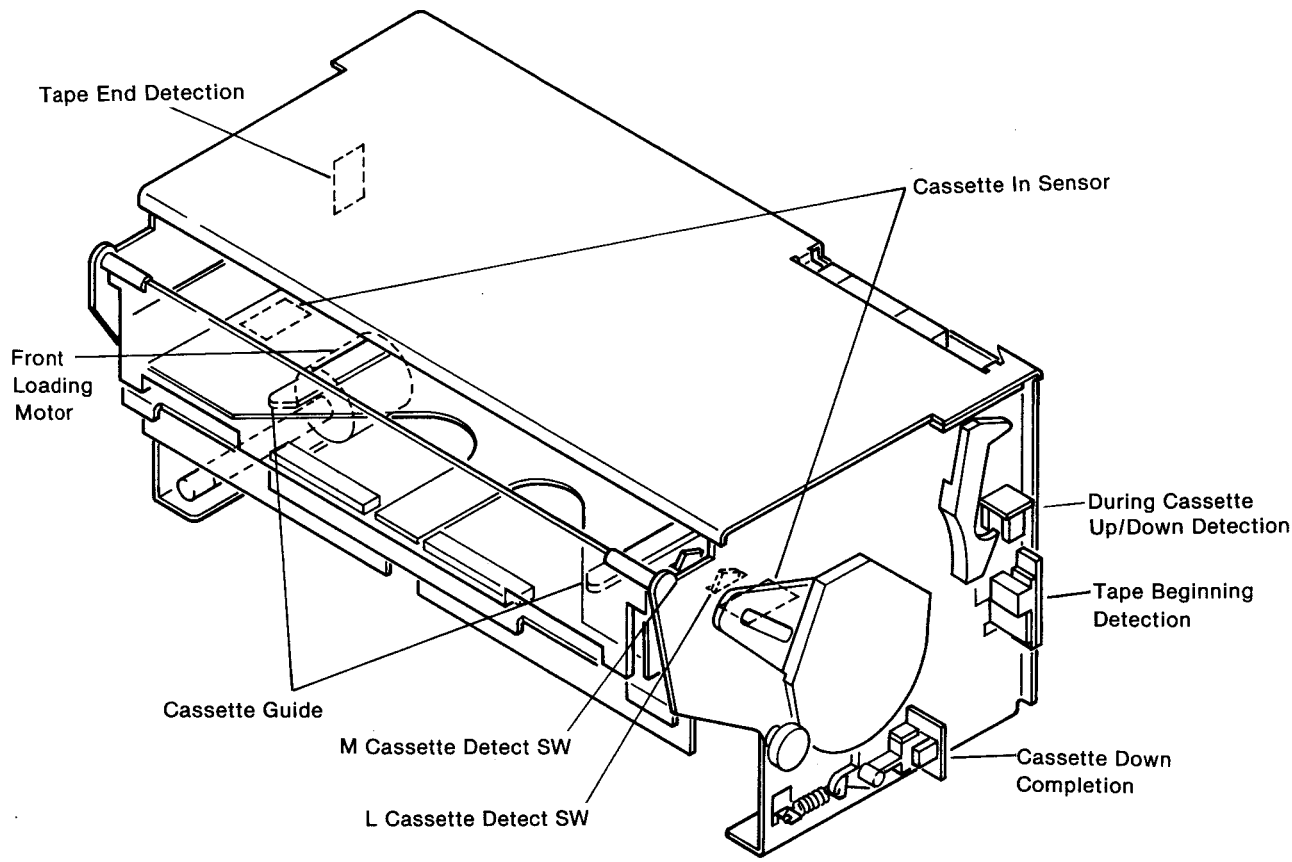

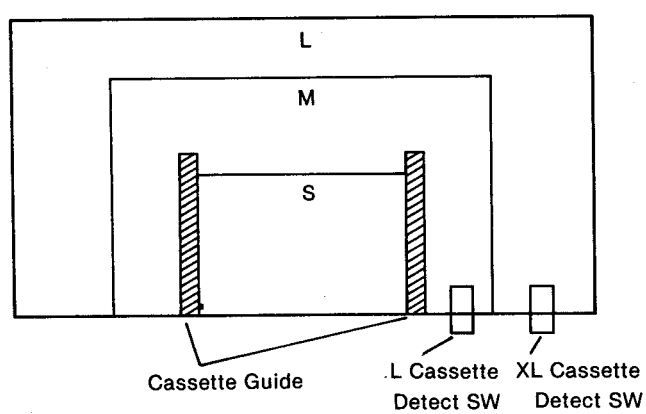

Fig. 10 Cassette Compartment

5). General Descriptions of Mechanism

(1) Reel Base
The AJ-D350 mechanism is based on the MII mechanism with additional improvements made in the areas of durability and service access.

The 3 cassette sizes (S, M and L) can be used without adapters. To achieve this the Reel Base moves according to the cassette size.
The reel motors are flat and specially designed for the AJ-D350s 100x search mode.

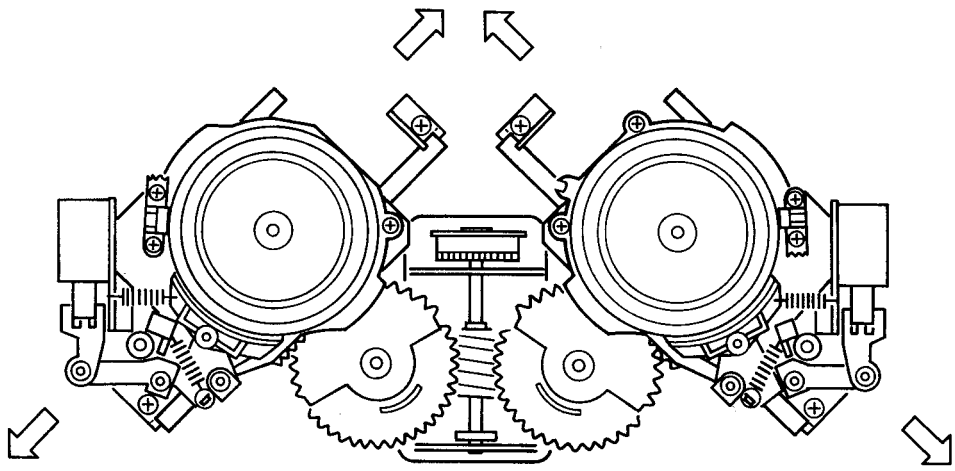

Fig. 11 Reel Base

(2) Tape Transport
The tape transport is designed to achieve a low tape tension of 30g at the drum entrance. This low tension increases head and tape life, and reduces head clogging.
It also increases the useful battery life in portable applications as the reel drive torque is reduced.

Rotary posts with ball bearing are used for tape transport posts, only one post is fixed. That post is inclined post and its tape wrap angle is 37 degrees.
The tape wrap angle around the drum is 191 degrees, the effective record wrap angle is 178.1 degrees. The tape room angle outside the effective area is about 7 degrees and 6 degrees.
The AC head is used for cue audio, control pulse and time code, and in R/P and erase modes.
Tape loading process is as follows, the beginning is slow, the middle is fast and the end is slow. The speed is selected by loading position switches. This makes tape loading speed fast without tape damage.
In the case of ready off mode, the tension release or sub-loading position can be selected; from front panel.
When the sub-loading position is selected, tape and heads are not in contact. This is good for tape and head life. This position is useful either when the VTR is used in "Stand alone" applications, or in a cart system.

7. Audio Video Overall Block Diagram

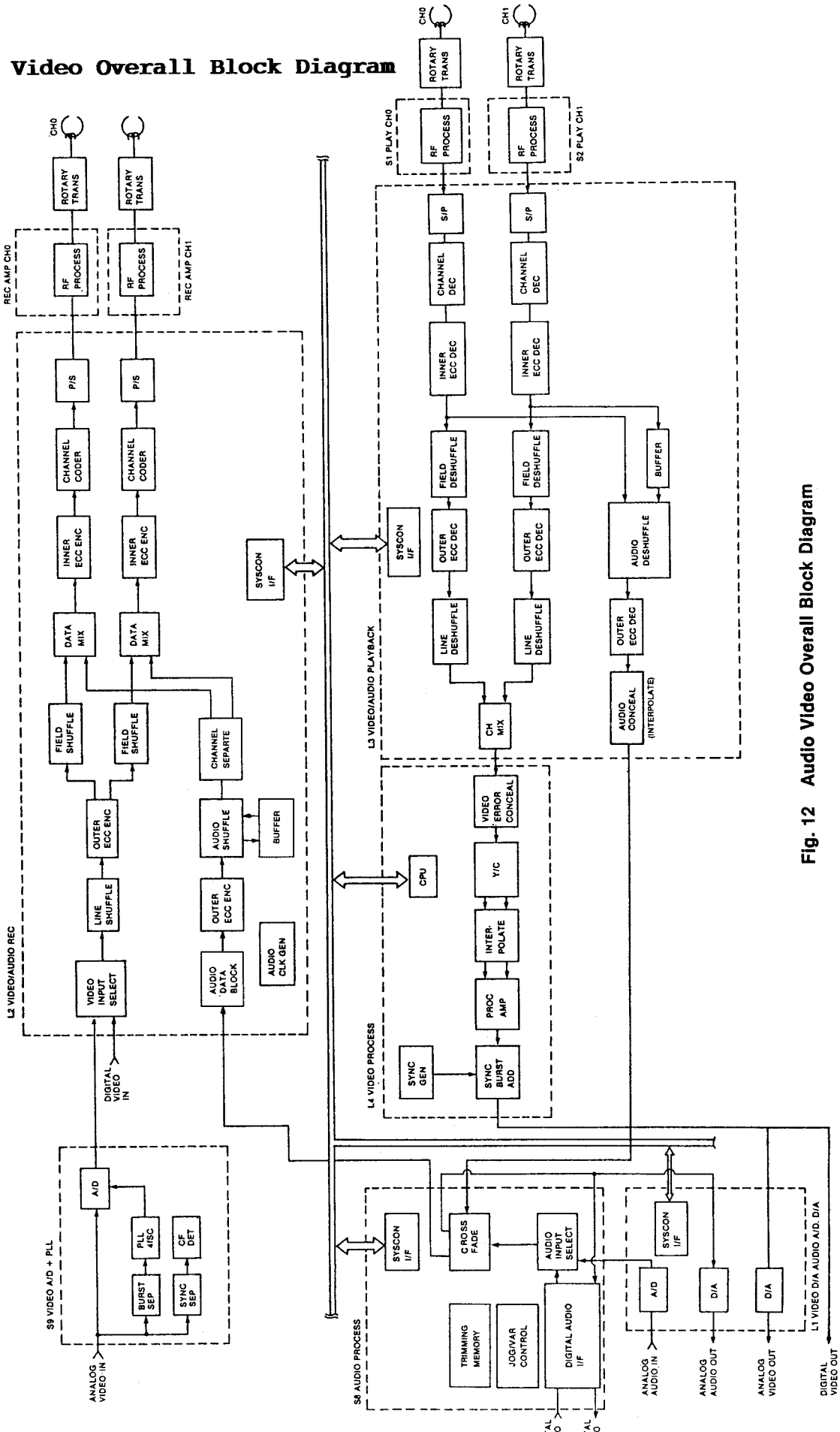

Fig. 12 Audio Video Overall Block Diagram

Overall Block Signal Flow

1. S9 Video A/D and PLL
8bit 4fsc analog to digital converter.

2. L1 Video D/A and Audio A/D, D/A
Video D/A conversion and Audio A/D, D/A conversion are performed by this circuit.

3. L2 Video Audio REC
(1) Digital In/ Analog In selection
(2) Video Recording digital process
(3) Audio Recording digital process
(4) Video Audio Mix
(5) Parallel to Serial conversion

4. S1 RF Play CH0
   S2 RF Play CH1
RF playback is performed in these boards.

5. Rotary Transformer and Heads
RF processed video and audio signals are recorded and played back by rotary heads on the drum, through the rotary transformer.

6. L3 Video Audio Playback
(1) Error correction and detection
(2) Video and Audio Separation
(3) Digital Audio in and out

7. L4 Video Process
(1) Video Error Concealment
If the error is not corrected by the Video and Audio Playback circuit, error concealment is performed by this circuit.

(2) Video Process
Video, Y and C level and phase are adjusted by this circuit.

(3) Sync Generator

(4) Sync Burst Mix

8. Audio Process
(1) Audio Analog and Digital input select
(2) Audio Cross Fade

AJ-D350 P.C. Board List

Ref	Name	VR	Total Parts
L1	VIDEO D/A, AUDIO A/D D/A	15	1626
L2	VIDEO/ AUDIO REC	3	883
L3	VIDEO/ AUDIO PB	0	740
L4	VIDEO PROCESS	21	1452
S1	EQUALIZER CH0	32	942
S2	EQUALIZER CH1	32	942
S3	CUE AUDIO	14	652
S4	AT	12	466
S5	SERVO	11	683
S6	TIME CODE	23	397
S7	SYSTEM CONTROL	1	397
S8	AUDIO PROCESS	26	357
S9	VIDEO A/D & INPUT PLL	25	712
M1	DRIVE	0	468
RF	REC AMP	10	578
	HEAD AMP	0	141
	H. A POWER (R)	0	26
	H. A REGULATOR (S)	2	68
Mother	L. MOTHER	0	85
	S. MOTHER	0	47
Power	POWER SUPPLY 1 POWER SUB 1	3	213
	POWER SUPPLY 2 POWER SUB 2	3	293
	POWER SUB 3	0	32
Front Panel	EJECT	0	3
	POWER LED	0	5
	AUTO OFF	0	8

Ref	Name	VR	Total Parts
Front Panel	FR MODE	0	36
	FR SW	0	136
	FR FUNCTION	0	60
	FR BASE 1	1	138
	FR BASE 2	2	134
	H. P JACK 1	1	6
Rear Panel	REMOTE JACK 1	0	73
	VIDEO IN/OUT	0	51
	REMOTE JACK 2	0	74
	REMOTE JACK 3	0	4
	AUDIO IN/OUT	0	111
	DIGITAL AUDIO IN	0	3
	DIGITAL AUDIO OUT	0	3
Other	AUDIO IN/OUT	0	582
	MECHA I/F	0	63
	FR H.P AMP	0	43
	BUFFER AMP	0	178
	AT POWER	3	132
		185	14,161

Fig. 13 P.C. Board List

8. ERROR CORRECTION AND ERROR CONCEALMENT

Errors in the playback data caused by drop-out or mis-tracking are corrected by the Error Correction circuit. Any errors that the Error Correction circuit cannot correct are concealed by the Concealment circuit, using the surrounding data.

Error Correction

Playback Data errors consist of random errors which may be caused by noise in the playback signal, and burst errors which are caused by drop-out due to tape damage. In this system, effective error correction is achieved using Double Reed Solomon coding which utilises an inner code and an outer code. This provides correction in two different axes. The inner code and outer code each consist of 8 check bytes. The inner code can correct up to four errors in one block, the outer code can correct up to eight errors in one segment column. In relation to the video signal, errors in up to 15 lines can be corrected, (20 blocks). The inner code is calculated in a lateral direction, providing a code of 8 words, the outer code makes a calculation in a vertical direction also providing a code of 8 words.

Shuffling

This format system performs shuffling of data bytes over 1 field. Shuffling is the diversification of data, and will minimize the number of errors that occur in one block improving the possibility of Error Correction. To perform Shuffling, input data is temporarily stored in memory (RAM). The stored data is then read from the memory in a different order to that which it was written. Even if the Error Correction circuit fails to correct all of the errors, shuffling will enable the Concealment circuit to conceal the errors using the surrounding data.

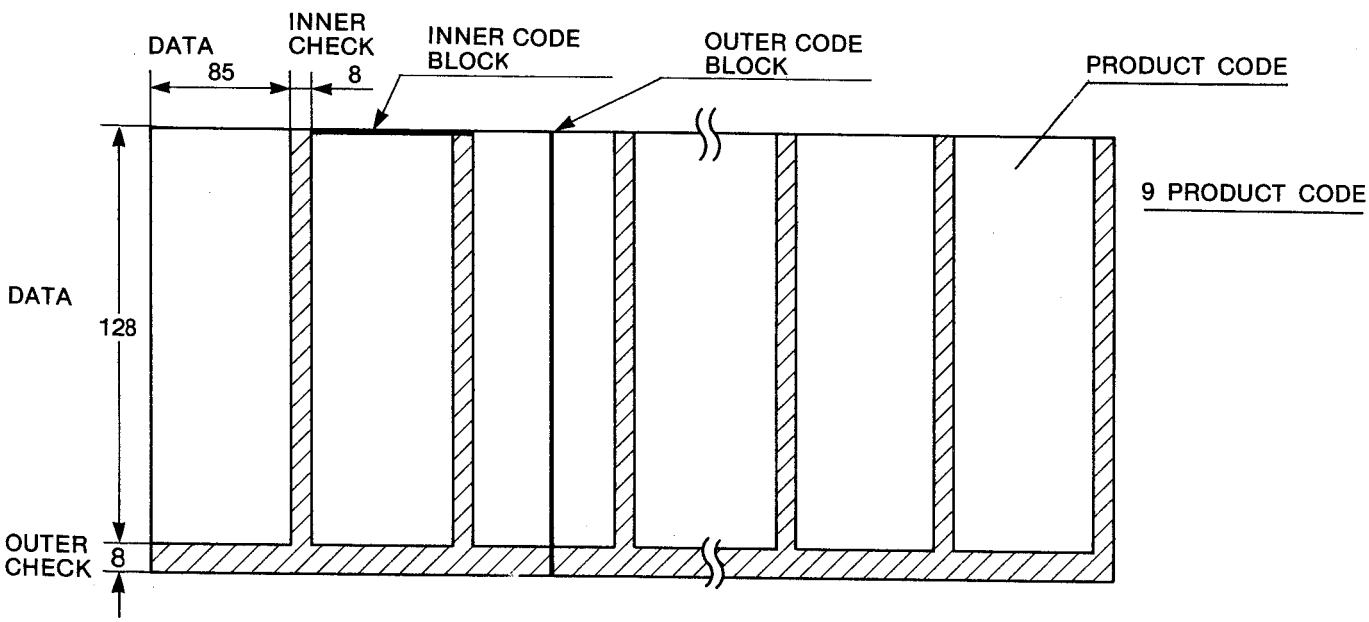

(a) NTSC 1 FIELD DATA and ECC

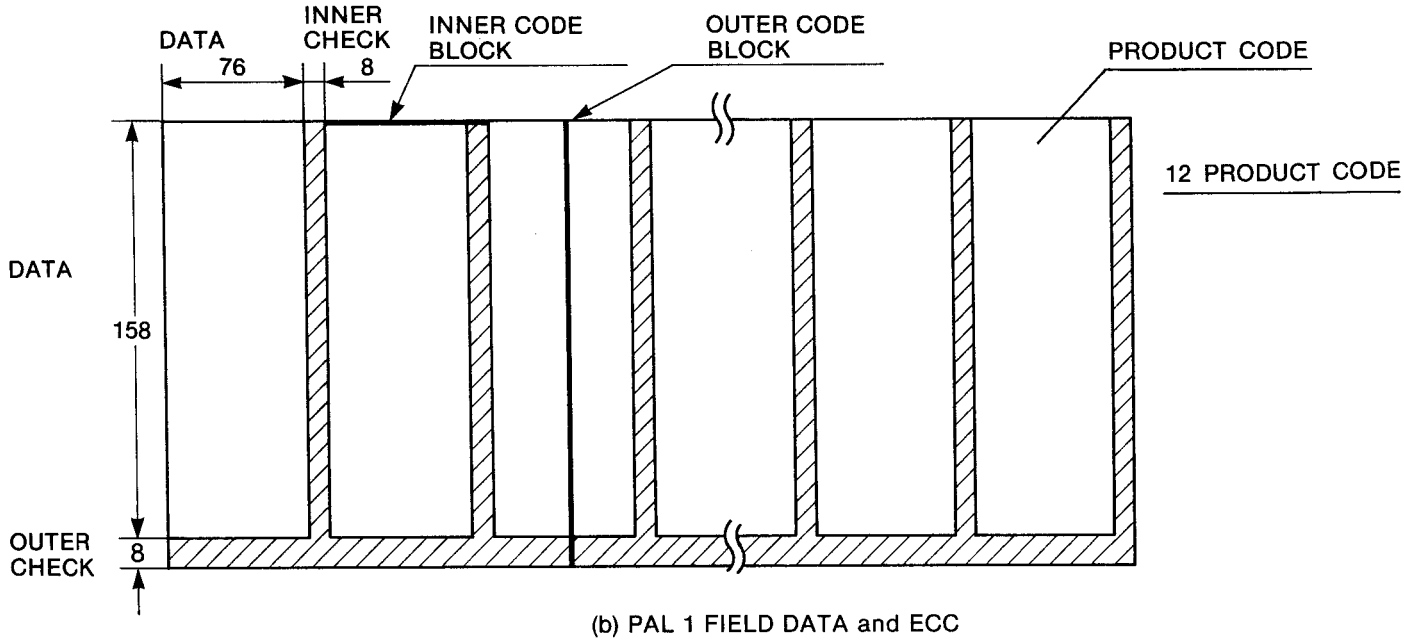

(b) PAL 1 FIELD DATA and ECC

Fig. 14 1 Field Memory

9. PCM Audio Error Correction

PCM audio also uses the same error correction codes as those previously described, the inner code and the outer code each consist of 8 words. The outer code can correct up to 8 errors and the inner code up to 4 errors at the same time.

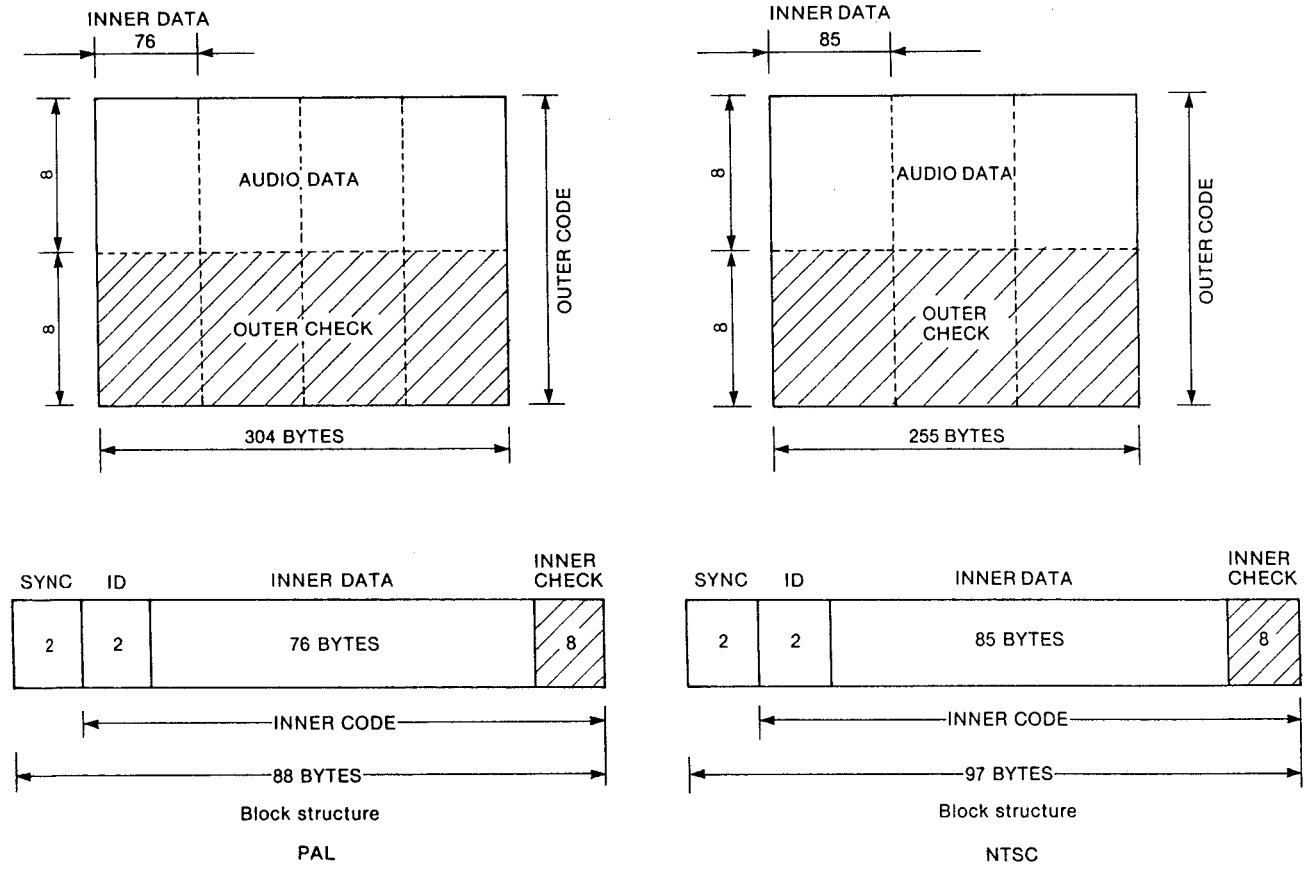

Fig. 15 PCM Auido Block Structure

10. Video Circuit

(1) A/D Converter
Sampling is performed at intervals of 4Fsc, quantization is 8 bit. 10 bits are assigned to the digital interface, because the AJ-D350 processing is 8 bits, the two low order bits are not used.

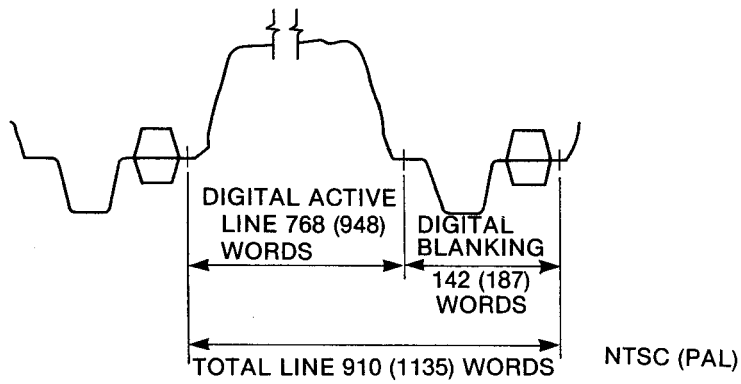

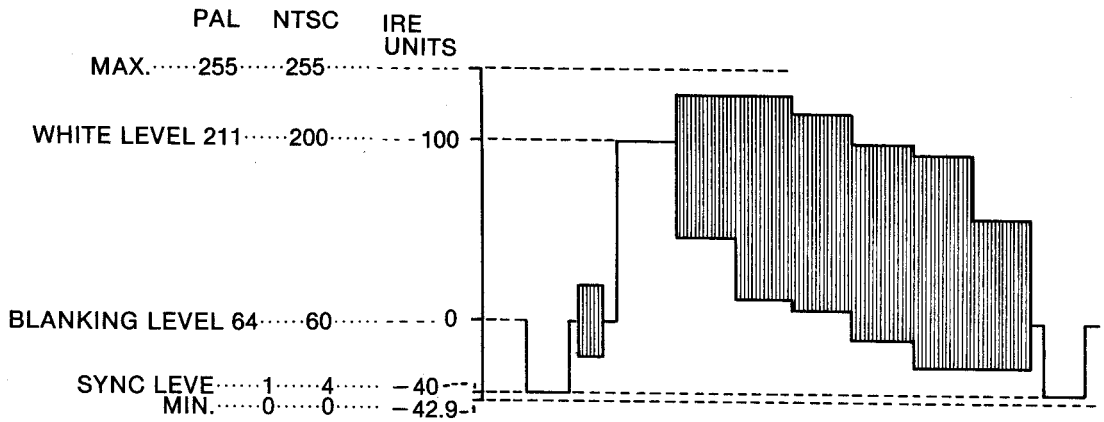

Fig. 16 Video A/D Converter Level

BLOCK DIAGRAM OF REC CIRCUIT

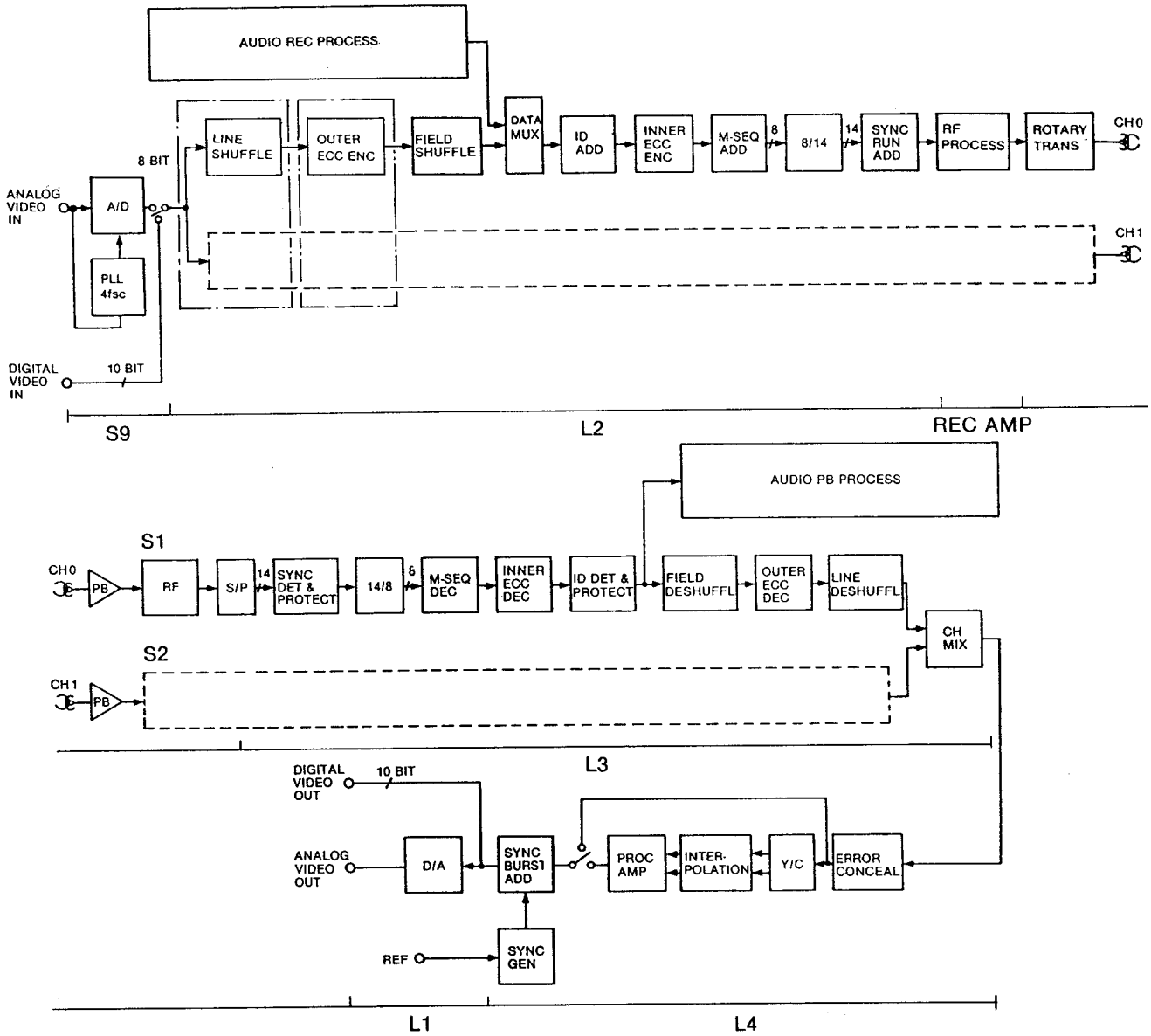

Fig. 17 Video Recording & Playback Block Diagram

(2) Line Shuffle
Line shuffle re-arranges the position of bytes of data in one horizontal line. This operation is reversed in playback and reduce the effect of burst errors by spreading them over the line.

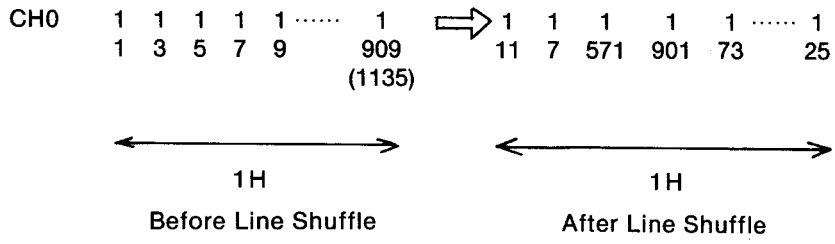

Fig. 18 Line Shuffle

(3) Outer ECC Encoder (ECC = Error Correction Code)
This encoder produces an error check code of 8 bytes from each row of the 85 (76) rows of 128 (158) bytes of the line-shuffled data. This code is called Outer ECC.

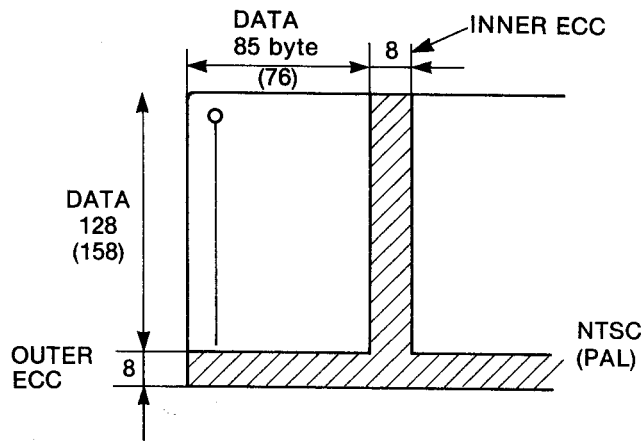

Fig. 19 Outer ECC

(4) Field Shuffle
Field shuffle re-arranges the position of bytes of data in one Field. This operation is reversed during playback and reduces the effect of burst errors by spreading them over the field, thus improving error correction.

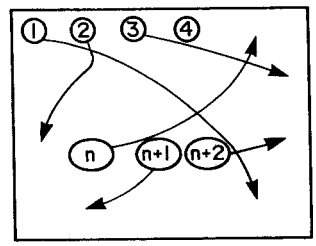

Fig. 20 Field Shuffle

(5) MUX (Multiplex Circuit)
The Multiplex circuit is used to multiplex the video and audio signals before they are recorded onto tape.

(6) ID ADD Circuit, (add identification to the Data Block).
The ID ADD circuit adds a two byte ID code to the data block. Four areas are identified, these are,

*Block Number
*The type of data in the block either Video or Audio
*The Segment Number
*The Field Number

The ID code consists of ID0 and ID1. The Block number consists of 9 bits (8 bits: B0 to B7 of ID0 and 1 bit : B8 of ID1).
The Video / Audio ID is indicated by Bit 7, the MSB of ID1, if video Bit 7 = 0, 1 = audio. The remaining bits are used to identify the Segment number and Field number. The blocks are numbered sequentially so that any error which occurs can be detected and compensated for.

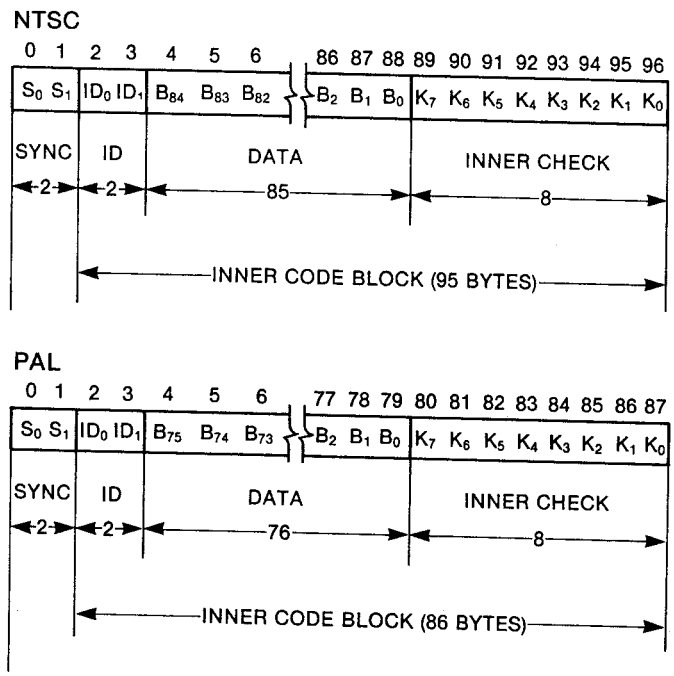

Fig. 21 Video Block Structure

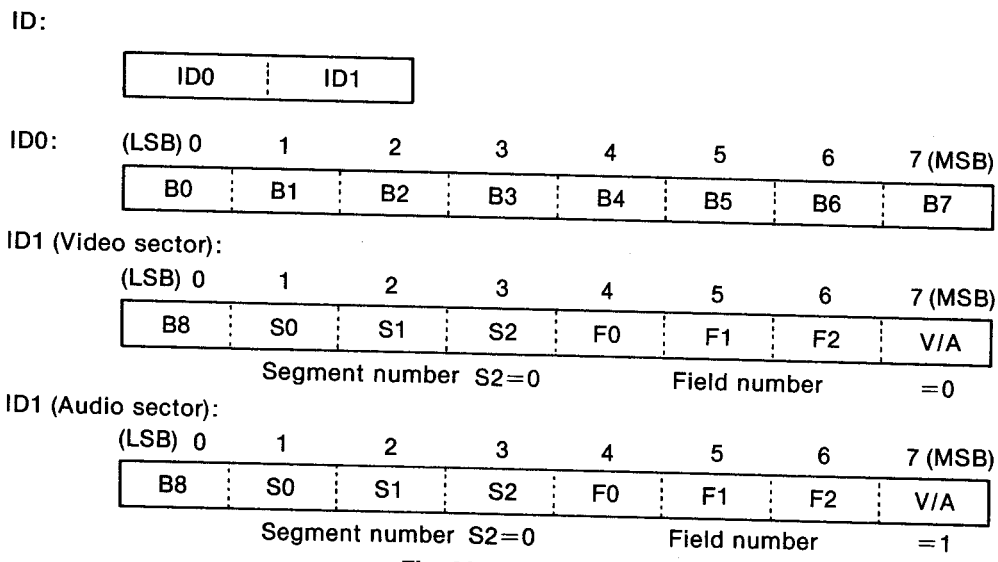

Fig. 22 ID Code

(7) Inner ECC Encoder
This circuit produces the Inner Error Correction code block shown above, the code consists of 8 bytes. By adding this code up to four errors per block in the playback signal can be corrected, and four errors marked for correction by the Outer error correction circuit.

(8) M-SEQ ADD (Maximum Length Sequence Addition)
M-SEQ is a circuit which minimizes the sequence of continuous 1's or 0's, which is difficult to record. This is achieved by generating random signals of 1 and 0 and adding them to the data that is to be recorded. During playback the M-SEQ circuit restores the data to the original state.

(9) 8-14 Conversion (Eight to Fourteen Modulation)
Eight to Fourteen Modulation converts 8 bit data into 14 bit data. The 14 bit data is used to minimise the DC component and frequency range. This operation sets the minimum sequence of bits to 2 and the maximum to 7. As a result both the high and low frequency range is reduced. (8 bits = 1 byte, 14 bits = 1 word).

(10) SYNC and RUNUP add
The track is composed of the following sectors:

Audio sector 1
Audio sector 2
Video sector
Audio sector 3
Audio sector 4

Each sector begins with either Runup 0 or Runup 1. Each track begins with Runup 0, and repeats the pattern of 0011 for 50 words, all the other sectors in that track begin with the Runup 1, this pattern is also 0011 but repeats for 20 words. This process of Runup bits is used to lock the playback clock PLL to the playback data. Sync bits, which comprise two 14 bit patterns, are used to detect the start of each block.

Runup 0, Runup 1
Runup A: 01100001111001 10011110000110
Runup B: 10011110000110 01100001111001
Runup 0=50 word, Runup 1=20 word
Sync (Selection of sync A and sync B is to be by 8/14 rule):
Sync A: 00110011100110 00001110001111
Sync B:11001100011001 11110001110000

Fig. 23 Sync and Runup

1 TRACK SCAN

SEC-TOR	NO.	NAME	BLOCK SIZE	BLOCK				
	19	Post			Sync	ID		
A4	18	Audio sector 4	8 Block		Sync	ID	Data	Inner check
	17	Pre 1		Runup 1	Sync	ID	Space	
	16	Gap						
	15	Post			Sync	ID		
A3	14	Audio sector 3	8 Block		Sync	ID	Data	Inner check
	13	Pre 1		Runup 1	Sync	ID	Space	
	12	Gap						
	11	Post			Sync	ID		
V	10	Video sector	NTSC 408 Block / PAL 498 Block		Sync	ID	Data	Inner check
	9	Pre 1		Runup 1	Sync	ID	Space	
	8	Gap						
	7	Post			Sync	ID		
A2	6	Audio sector 2	8 Block		Sync	ID	Data	Inner check
	5	Pre 1		Runup 1	Sync	ID	Space	
	4	Gap						
	3	Post			Sync	ID		
A1	2	Audio sector 1	8 Block		Sync	ID	Data	Inner check
	1	Pre 0		Runup 0	Sync	ID	Space	

1 TRACK SCAN

A1, A2, A3, A4=AUDIO SECTOR
V=VIDEO SECTOR

Track Format

Fig. 24 Track Format

1. A/D

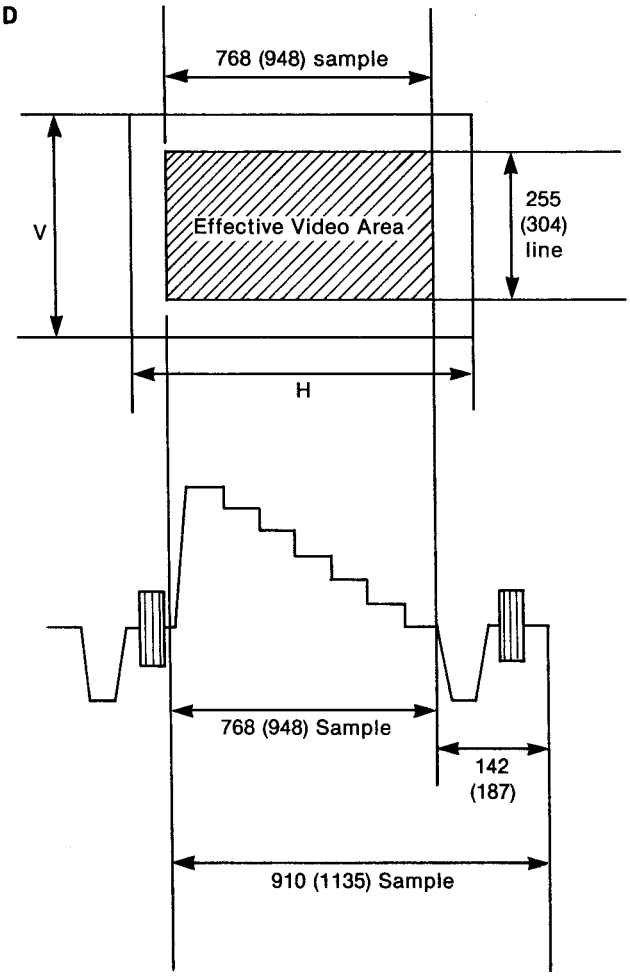

Sample 0, 2, 4, ... → CH0

Sample 1, 3, 5, ... → CH1

NTSC
1 Line effective sample number
=768 sample/line
1 Field effective sample number
=768 sample/line × 255 line
=195,840 sample/Field

195,840 sample/2=97,920 sample
CH0=97,920 sample/Field
CH1=97,920 sample/Field

PAL
1 Line effective sample number
=948 sample/line
1 Field effective sample number
=948 sample/line × 304 line
=288,192 sample/Field

288,192 sample/2=144,096 sample
CH0=144,096 sample/Field
CH1=144,096 sample/Field

Fig. 25 A/D Sampling

2. LINE SHUFFLE

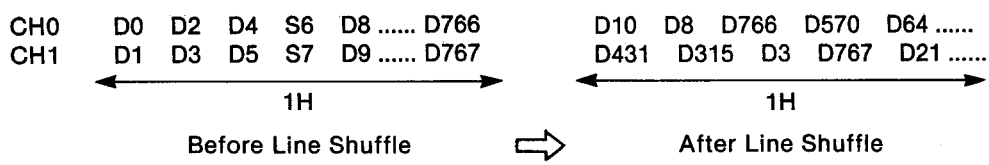

3. FIELD MEMORY

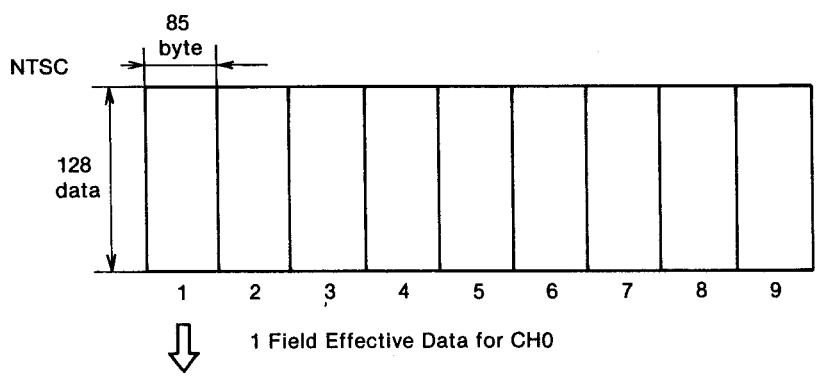

85 byte × 128 data=10,880 byte/Product code
10,880 byte/Product code × 9 Product code/Field=97,920 byte/Field
(1 Sample...1 byte)

Fig. 26-1 NTSC 1 Field Memory (CH0)

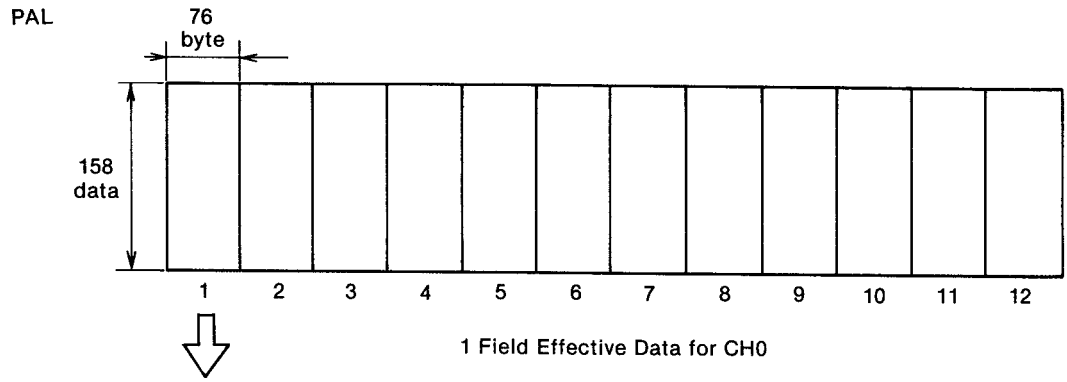

76 byte × 158 data = 12,008 byte/Product code
12,008 byte/Product code × 12 Product code/Field = 144,096 byte/Field
(1 Sample...1 byte)

Fig. 26-1 PAL 1 Field Memory (CH0)

4. OUTER ECC

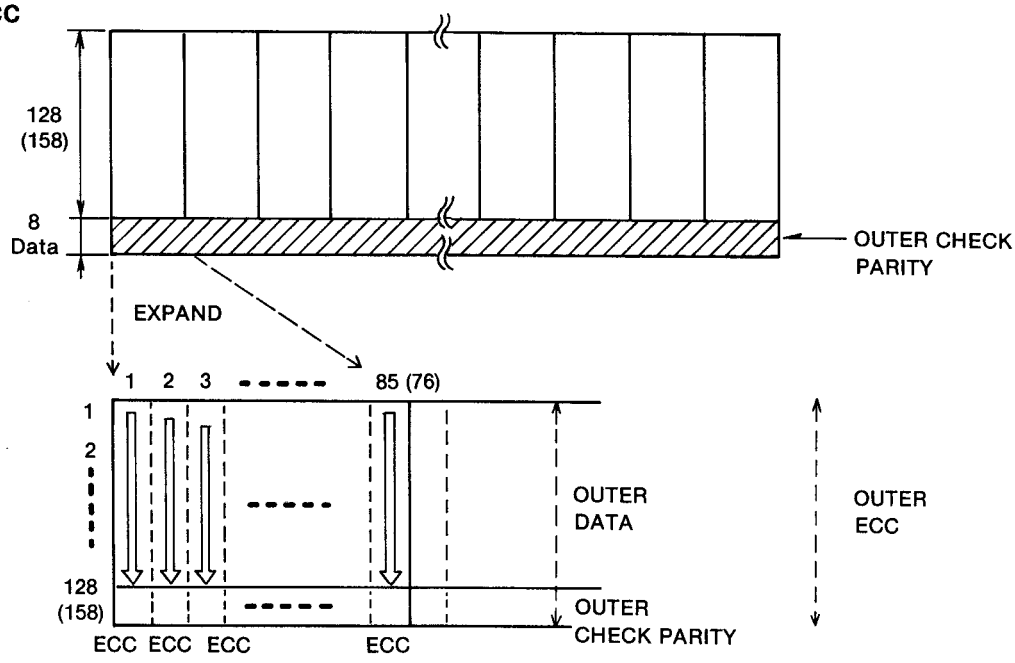

Fig. 27 Outer ECC

5. FIELD SHUFFLE

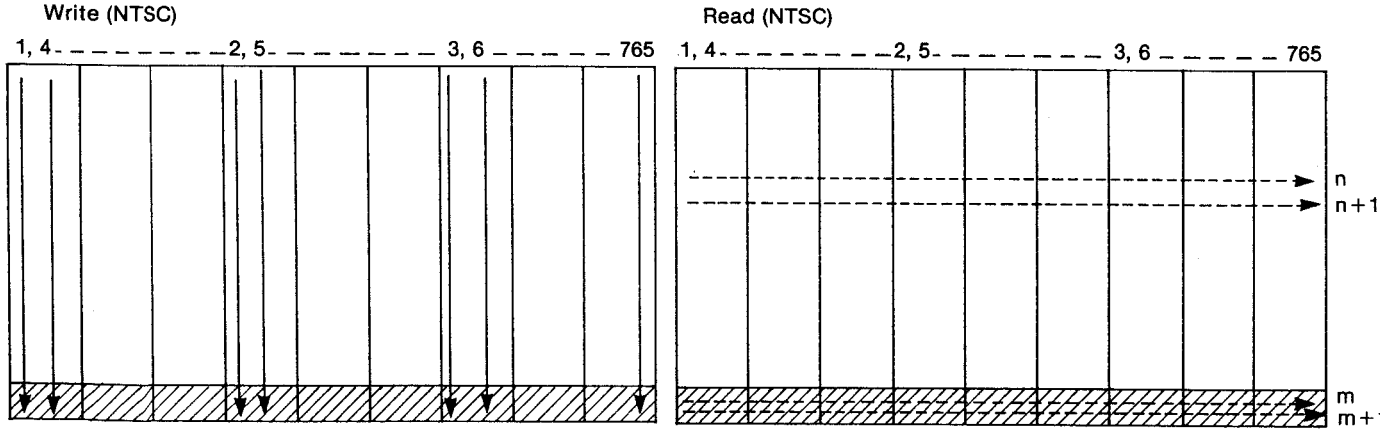

Fig. 28 Field Shuffle

6. INNER ECC

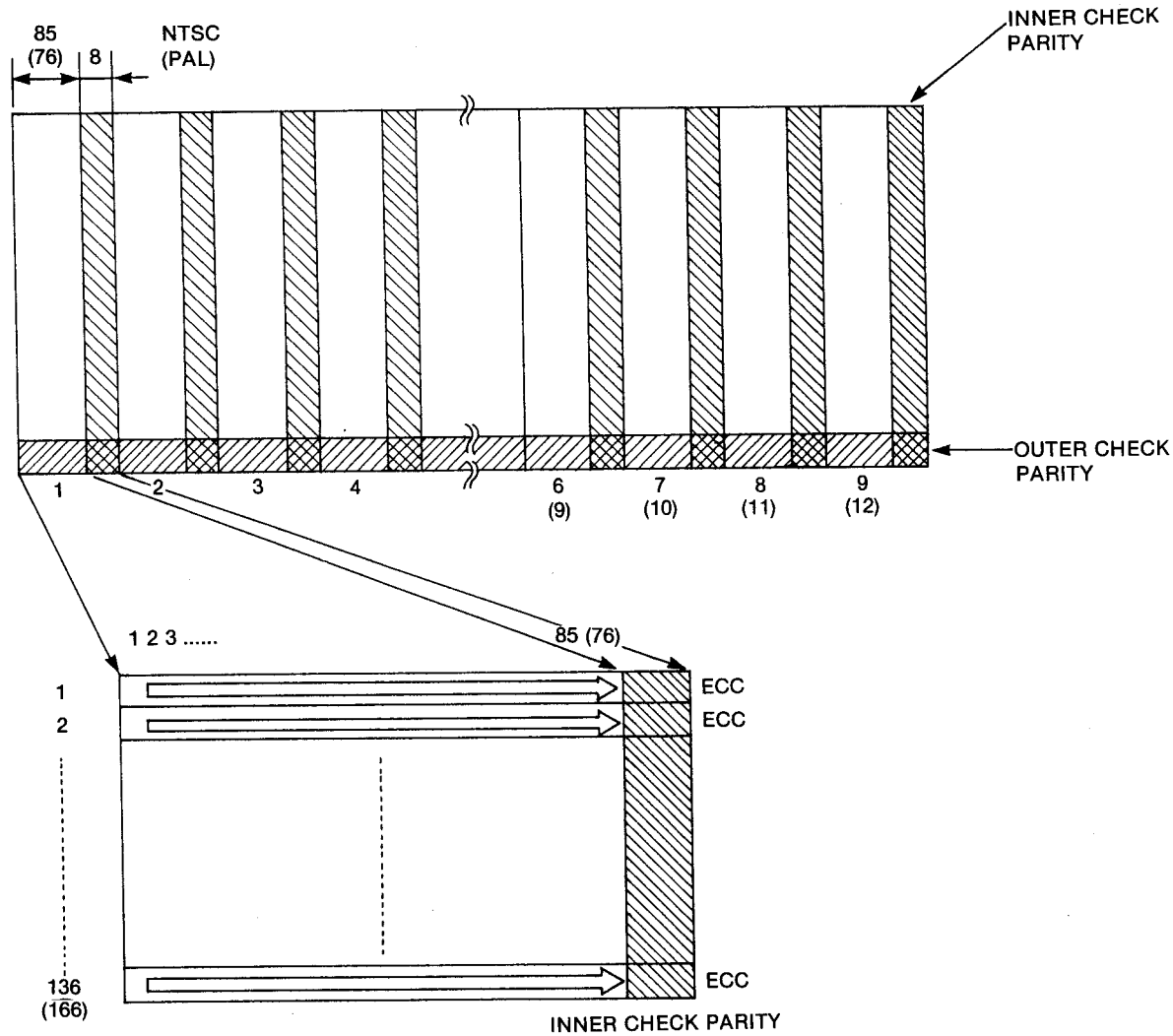

Fig. 29 Inner ECC

7. FIELD SHUFFLE PAL

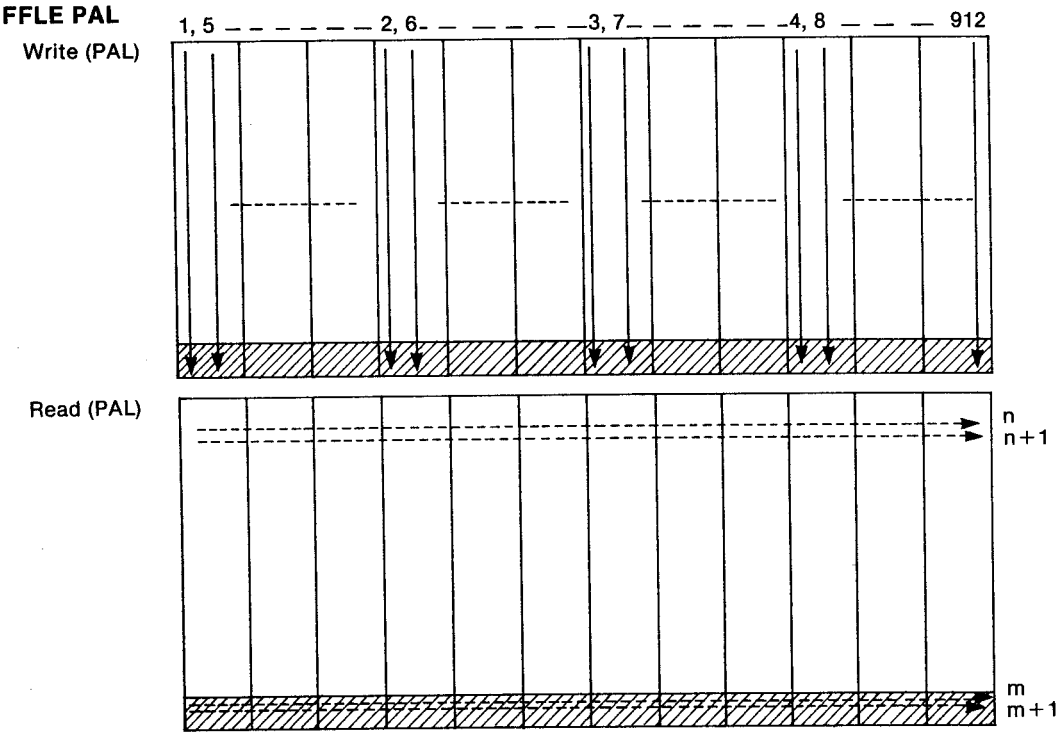

8. M-SEQ

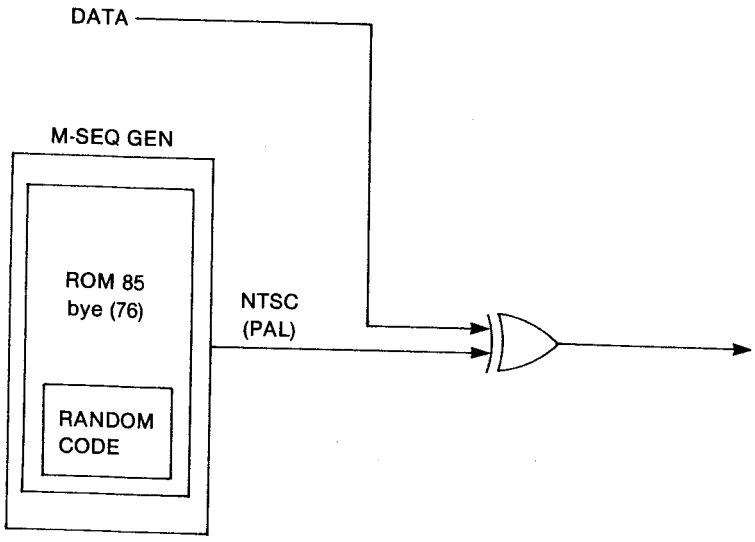

M-SEQ ADD CIRCUIT

10. SYNC, ID

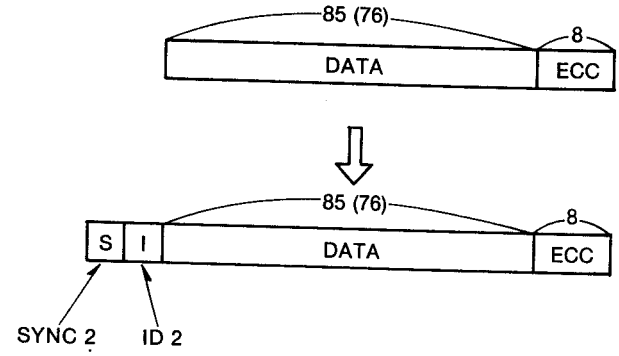

Fig. 30 Sync, ID

9. 8 to 14 Modulation

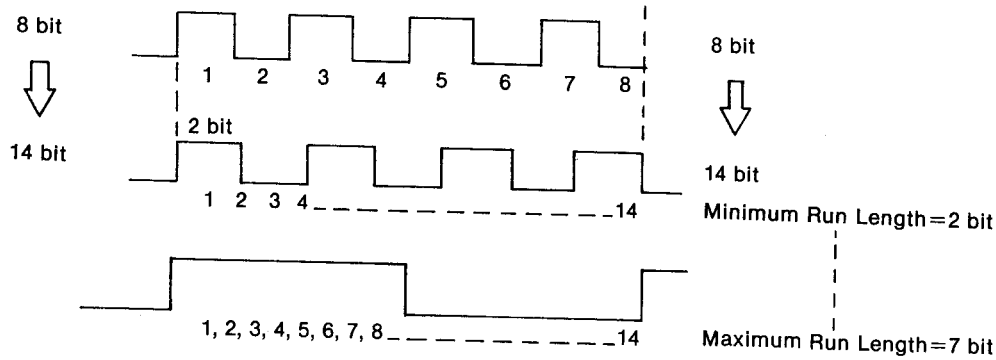

(11) P/S (Parallel to Serial Converter) Circuit
The P/S circuit converts the 14-bit data into serial data to be recorded onto tape.

(12) Recording Amplifier (Rec Amp)
The serial data are supplied to Rec Amp. Head switching is used to switch the data between heads CH0A and CH0B, and CH1A and CH1B heads.

The 4T GEN,(4 clock pulse generator, refer to the RF Block Diagram), is a reference generator designed to operate while adjusting the recording current. The record current adjustment is available on the AJ-D350 Front Panel Test Mode Menu.

ENV DET (Envelope Detector) is used in the adjustment of the tracking. The playback heads are Auto-Tracking, therefore this tracking adjustment will not have a noticeable effect on their operation. The Record heads are not Auto-Tracking, therefore the playback signal from the these heads is used to set the Tracking. Tracking should be checked before editing.

RF REC/PB Block Diagram

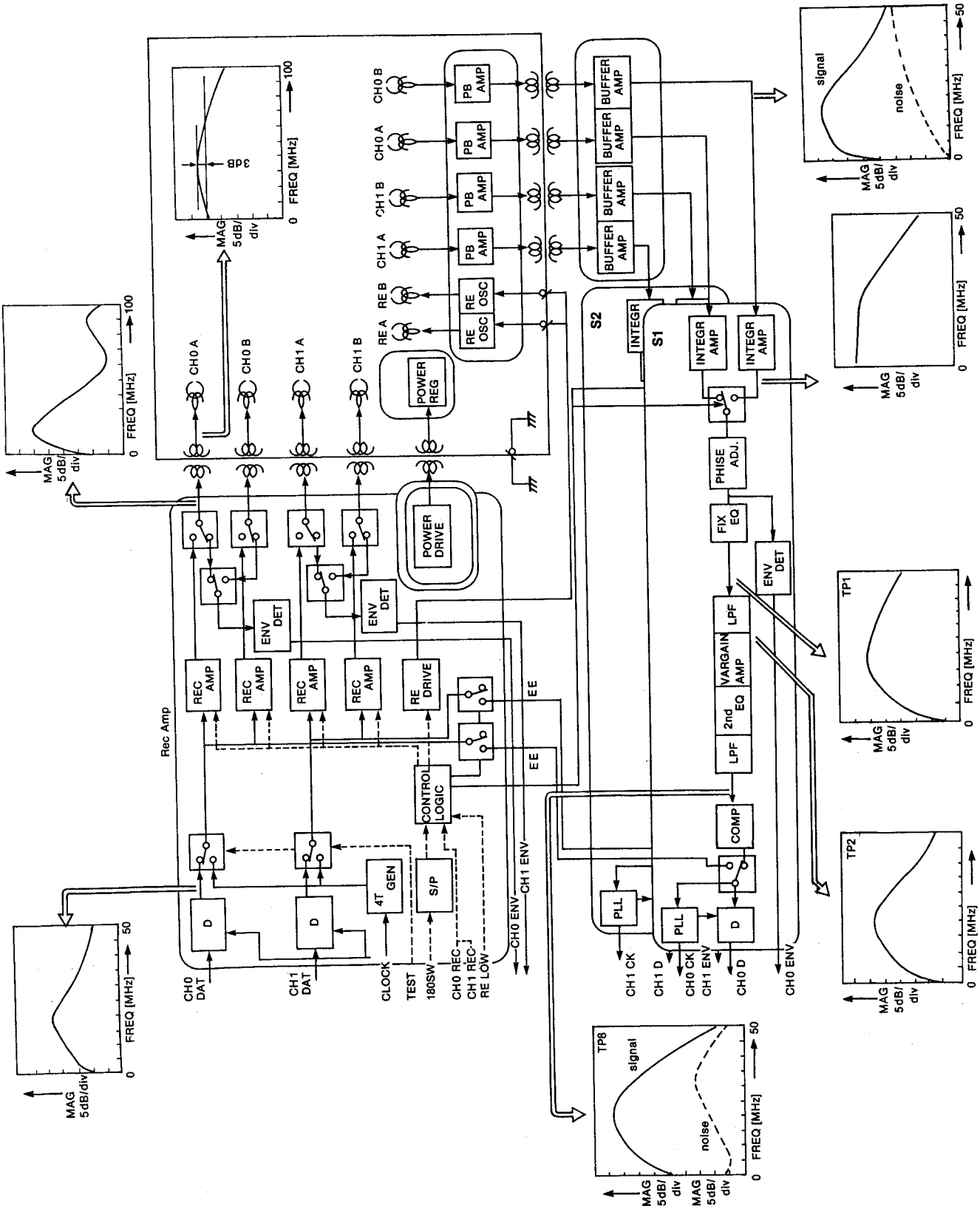

Fig. 31 RF Block Diagram

Playback Circuit

(1) PB Amp, RF Circuit
Signals regenerated in the heads, are amplified by the PB AMP on the drum unit, and sent via rotary transformers to the Buffer Amp. The signals from head CH0 are sent to Board S1 and those of head CH1 to Board S2. Boards S1 and S2 have the same structure, therefore, only the operation of Board S1 will be descrived:

The output from the Buffer Amp is input to the Integrating Amp. The off tape waveform is reproduced with differential characteristics due to the magnetic recording process. These are eliminated in this amplifier.

After passing through the Integrate Amp, the phase of the waveform is compensated by the Phase Adjustment Circuit with the head switched.

Fix EQ and 2nd EQ compensate the playback frequency response.
Fix EQ mainly operates at the low frequencies, while the 2nd EQ operates at the higher frequencies. COMP is a comparator which provides waveform shaping. Each channel has a PLL circuit which is locked to the off tape data, the PLL output, called the playback clock, contains jitter components from each head. This clock is used as the write clock for each channel of data into memory.

(2) S/P (Serial to Parallel) Circuit
This circuit restores the regenerated data to the original 14-bit parallel signals.

(3) Sync Detect and Protect
This circuit detects the Sync at the start of the data block. If the Sync is mis-read, the whole block is lost. If this occurs the next sync will be detected for the identification of the block. The sync is used to lock a counter in a similar way that Horizontal sync in the composite television signal is used to lock the Horizontal Oscillator.

(4) 14 - 8 (Eight to Fourteen Demodulator) Circuit
The 8-14 Demodulator is a ROM, the 14-bit data is input as the address of the ROM and outputs the 8-bit data corresponding to the addresses is read out.

(5) M-SEQ DEC (Maximum Length Sequence Decoder)
The M-SEQ decoder removes the random data that was added to the record data by the M-SEQ addition circuit.

(6) Inner ECC Decoder
Up to four errors in a block can be corrected by the 8-word Inner ECC. When five to eight errors occur a flag is set. These flagged errors, plus four more, will be corrected by the Outer ECC. Any further errors will be concealed.

BLOCK DIAGRAM OF PB CIRCUIT

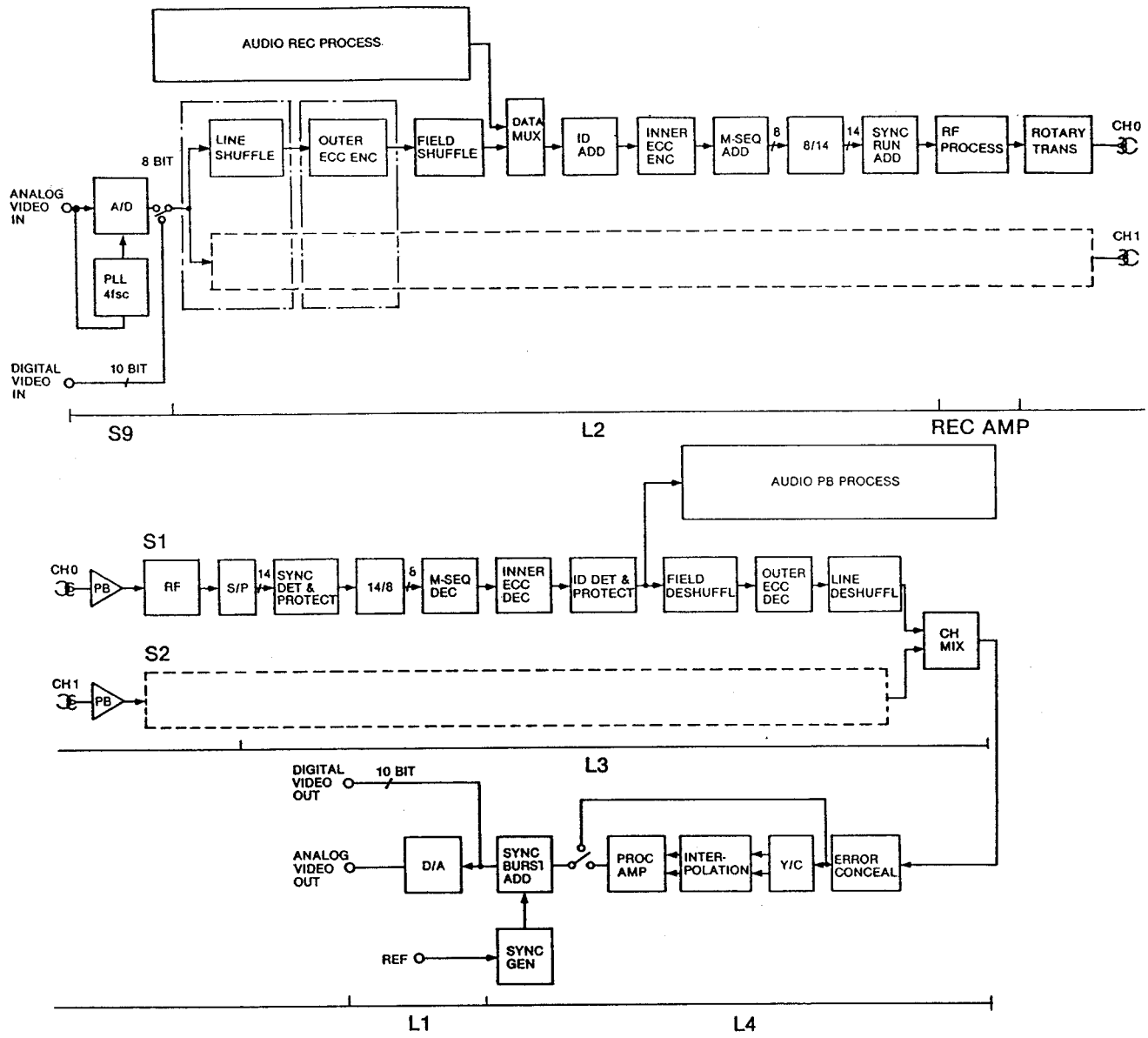

Fig. 32 Video Recording & Playback Block Diagram

(7) ID Detect and Protect
During the record process each block was given an ID number, this number identifies the block position in the field memory. This circuit detects the ID assigned to each block. Block numbers are recorded sequentially and a counter is provided to compare the detected ID number with the recorded one to prevent ID detection errors occurring. The output from the ID Detect and Protect Circuit is separated into two sections, the audio section and the video section.

(8) Field Deshuffle Circuit
This circuit restores the data to the state before Field Shuffling was applied.

(9) Outer ECC Decoder
The Outer ECC Decoder, uses an 8 word error correction code to correct up to eight errors when they occur in one segment column.

(10) Line Deshuffle
This circuit restores the data to the original state before Line Shuffle was applied.

(11) CH MIX
Channel Mix Circuit mixes signals CH0 and CH1 signals.

(12) Error Concealment
The data which Inner and Outer error correction circuits have failed to correct are concealed by the Error Conceal Circuit. The Error Conceal Circuit consists of 2D, and 3D, (2 and 3 dimensional) concealment circuits. If 2D concealment fails to conceal the errors, then 3D concealment is used. Error Concealment can still operate when one of the heads is clogged. For example, if the data of CH1 head is missing, more than 10 adjacent data samples are used for compensation.

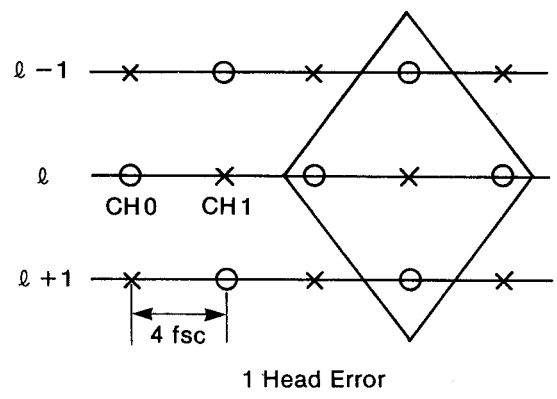

Fig. 33 Error Conceal Concept

(13) Y/C Separation Circuit
This is a composite VTR, so we cannot adjust luminance and chrominance signals independently if they remain as composite signals. A Y/C Separation Circuit is used to separate them to permit independent adjustment.

(14) Interpolation Circuit
When auto-tracking slow motion playback is performed the fields of the playback signals are not necessarily in the correct odd / even field sequence. Some fields may be skipped or the same field may appear twice. If this occurs it is necessary to interpolate them to produce the correct odd / even sequence. Depending on how good the Interpolation circuit the slow motion picture quality will be affected. The playback picture may move up and down in the vertical direction or the vertical resolution may be reduced.

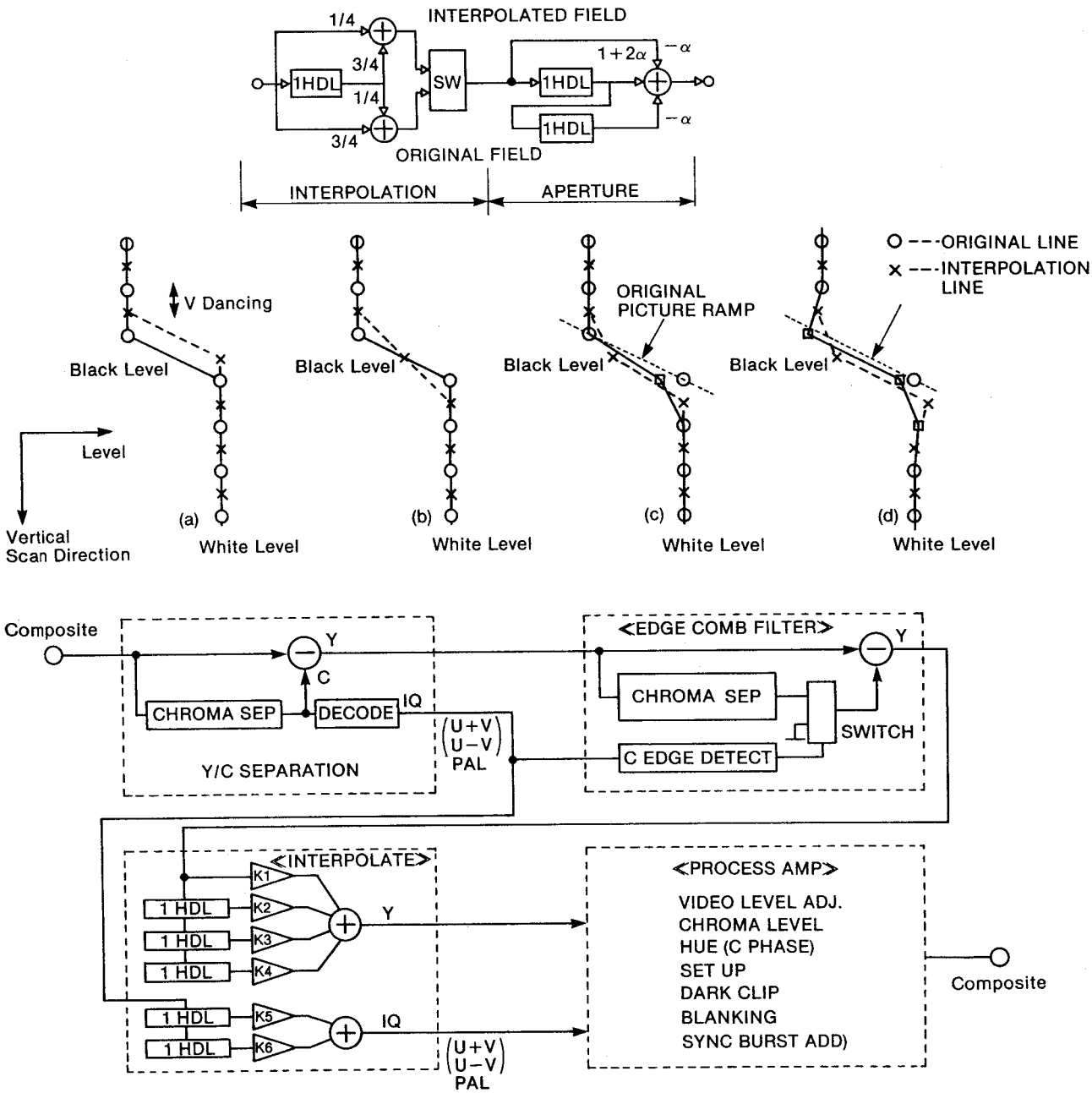

Fig. 34 Interpolation Circuit

(15) Process Amp
Process Amp can adjust the video level, chroma level, chroma phase (Hue), set up level, dark clip, blanking , etc. Each of these can be set using the menu on the front panel. The output from the Process Amp is sent to a changeover switch. This changeover switch allows switching between two states, to use or by-pass the Process Amp. When items such as chroma level are set to "variable", the Process Amp is selected. When "unity" is selected the Process amplifier is by-passed.

(16) Sync Burst Add
Sync and Burst synchronized with the reference or input video signals replace the playback sync and burst signals.

(17) Digital Output and D/A Converter
After the Sync and Burst have been mixed with the playback video signal they are output as 10 bit digital signals, and via a D-to-A converter as composite video.

11. Audio circuit

1). Format of the tape
The tape used is a 1/2 - inch metal tape, which has a single 0.6mm wide analog cue audio track and 4 PCM audio channels on which the PCM audio signal is recorded, together with the video signal. In the PAL system, one field has eight tracks, with the twin head recording signals in CH0 and CH1, which results in each field having four pairs of tracks. In the NTSC system, one field has six tracks, the twin head records signals on CH0 and CH1 which results in each field having three pairs of tracks.
The PCM audio tracks are divided into A1 to A4, Audio signal channel 1 to channel 4, and the special allocation is adopted, so that signal corrections can be made in case the tape is damaged.
In audio insert editing mode, only single channel insert editing can be performed. Setting the pairs of tracks to the same channel by classifying them as A1 and A1 makes insert editing easy to control and will prevent problems in the event of the twin head running on the wrong tracks.

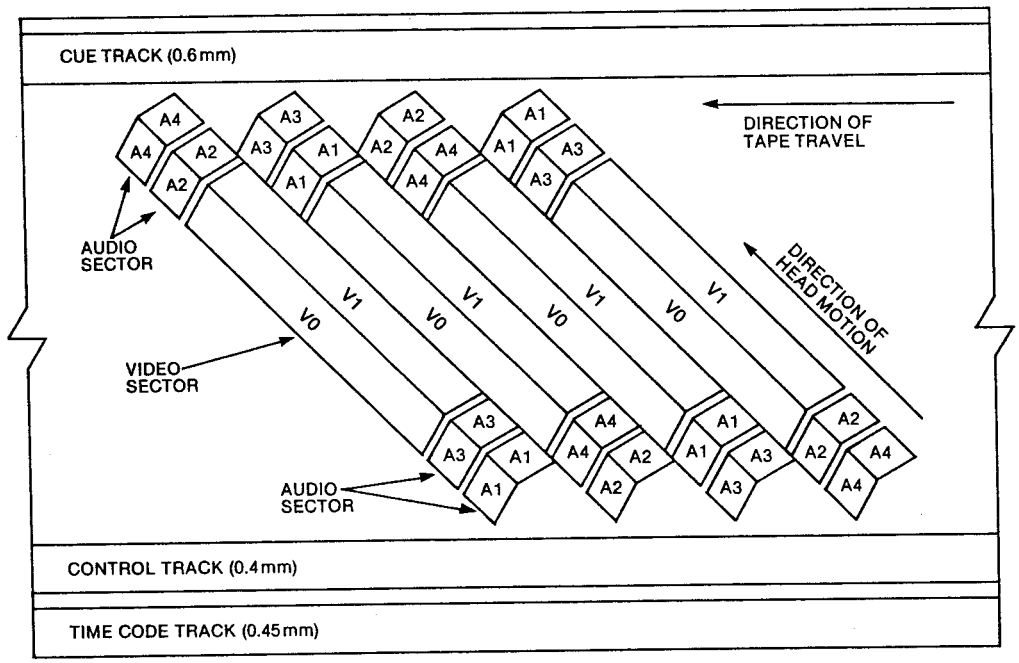

Location of recorded tracks (PAL)

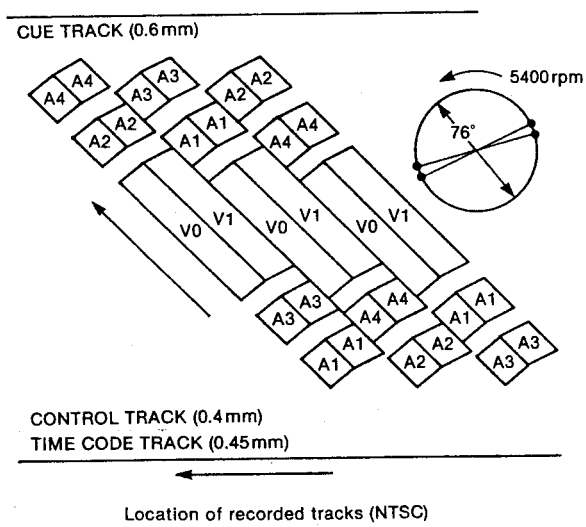

Location of recorded tracks (NTSC)

Fig. 35 Audio Location of Recorded Tracks

In PAL and NTSC systems, one block in a track (having 88 and 97 bytes space respectively), consists of four codes:

SYNC
ID
INNER DATA
INNER CHECK.

- SYNC is used to detect the recording start point.
- ID contains the block numbers in consecutive order.
- INNER DATA contains the recorded sample data.
- INNER CHECK is for checking INNER DATA errors.

The number of data samples in one NTSC field is 960 (at 59.94 Hz/Field) which is not divisible by the frequency of 48 KHz. Therefore, block numbers #1 to 5 represent the values 801, 801, 801, 801 and 800 respectively, which are all recorded in the ID code, data in one field are recorded in a sequence with the #1 to 5 as one cycle.

Audio insert editing is performed by following the sequence above.

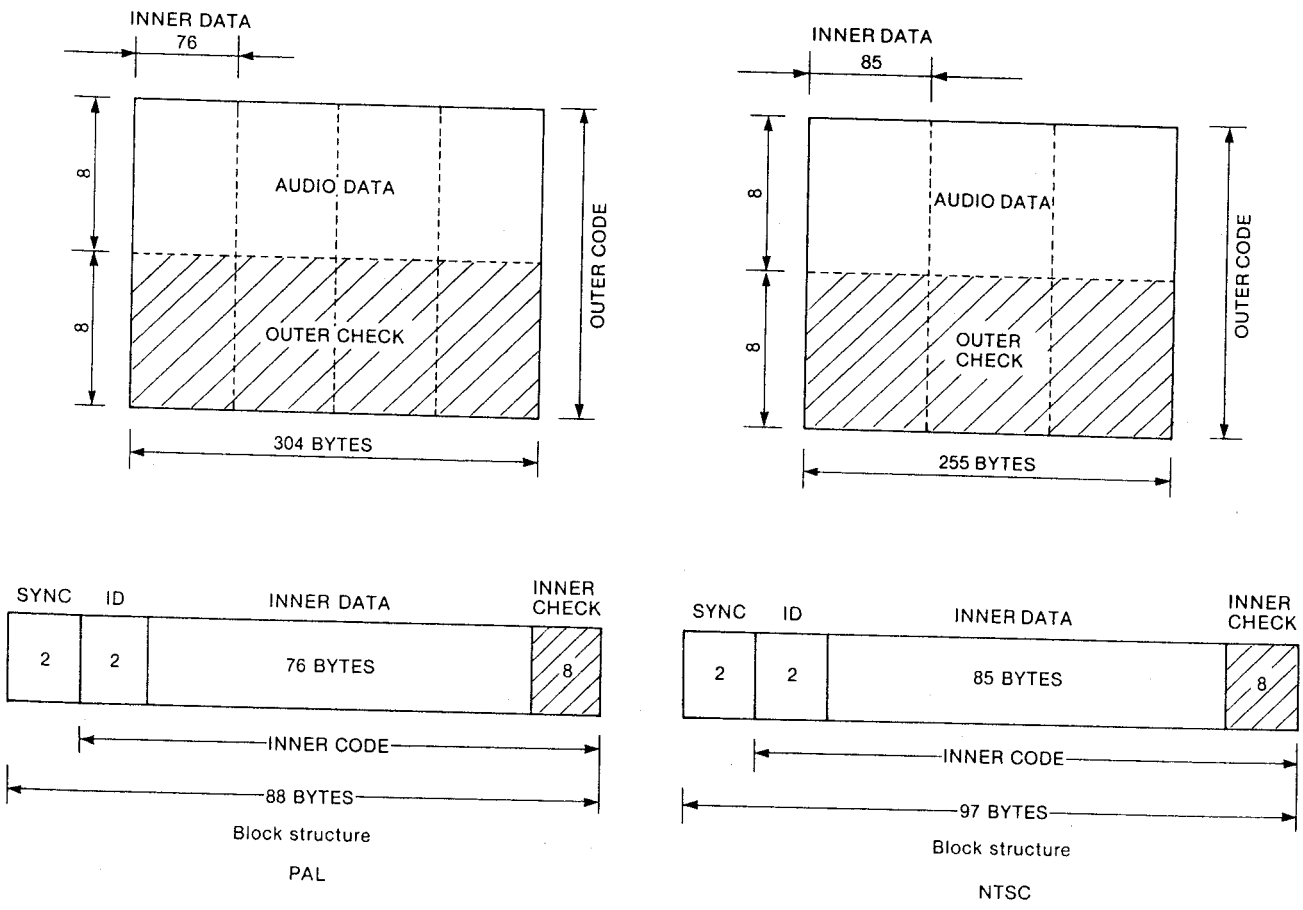

Fig. 36 Audio 1 Field Memory (CH1) and Block Structure

2). Audio REC circuit
The audio input is divided into analog XLR and digital AES/EBU formats, each of which has four channels. However, with the two channel signal sent via a single connector in the AES/EBU format, there are two channels for the connector input and two for the output.
The analog input signal is converted into a 20-bit digital signal in the A/D converter, where the digital signal converted from the analog signal and the AES/EBU format digital signal are selected. The audio signal is sent to the crossfade circuit which fades-out and fades-in the playback and recording modes respectively, to achieve a glitch free audio signal at the editing point.

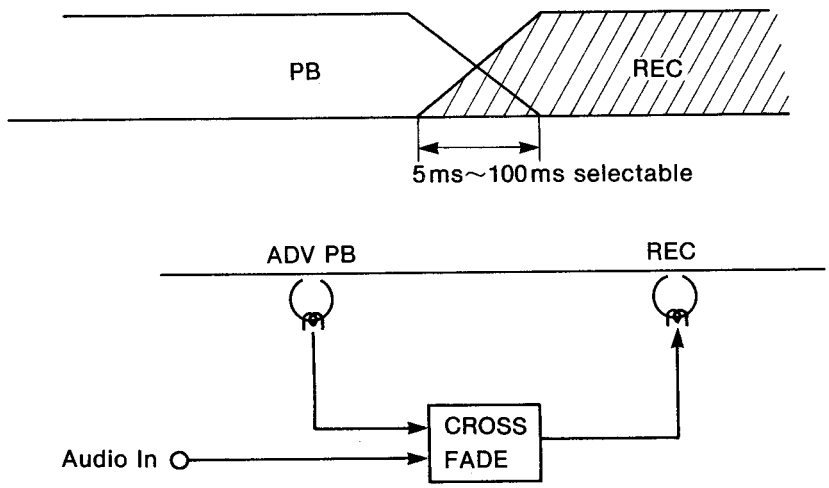

Fig. 37 Audio Signal Editing Point

The audio format is created by the field and a buffer memory in the recording circuit. This is then mixed with the video signal containing the ID and Inner Correction codes and 8/14-modulated.
Finally, after going through the RF circuit, it is registered in the recording head.

PCM AUDIO BLOCK DIAGRAM

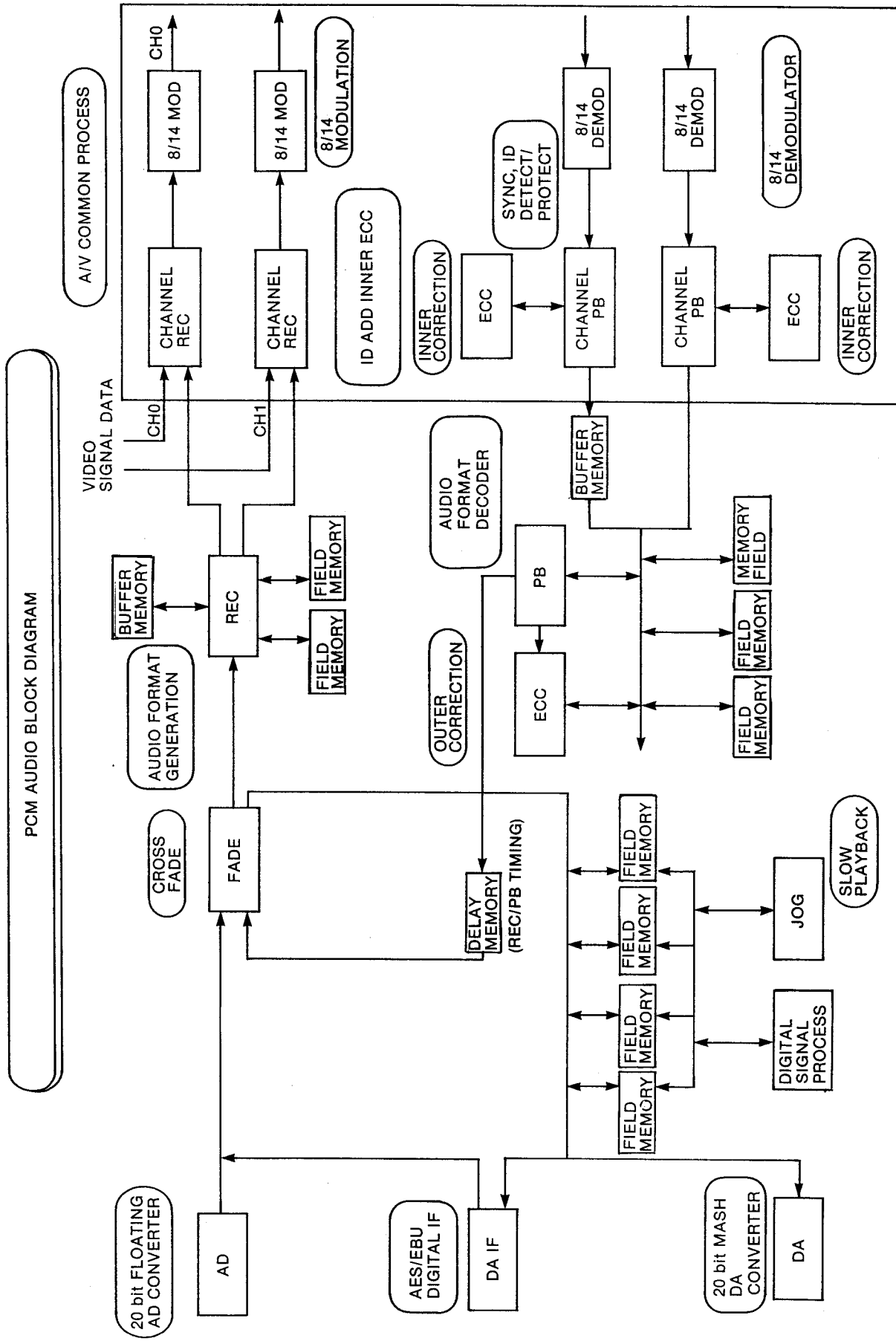

Fig. 38 PCM Audio Block Diagram

3). Audio PB circuit
After going through the head and the RF circuit, the audio playback signal executes 8/14-demodulation, detects the SYNC and ID and divides them into blocks. Also, based on the inner correction code, it corrects the inner errors.
In the playback circuit, the audio format is decoded, with the outer errors corrected. Then the audio playback data is sent to the delay memory to synchronize the timing of the audio signal with that of the video signal.
The audio playback data then goes through the crossfade circuit and into the audio slow-playback circuit, where data error correction is performed which enables the sound to be heard in the JOG mode.
For example, at 1/3x normal speed, interpolation is necessary.

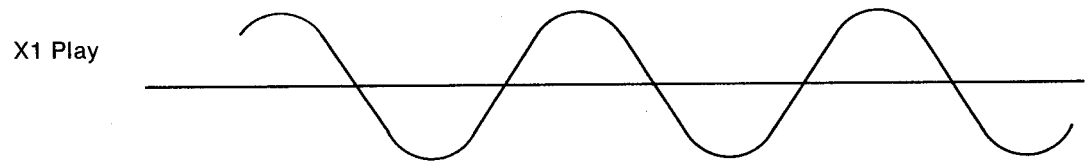

(a) Audio Normal Playback

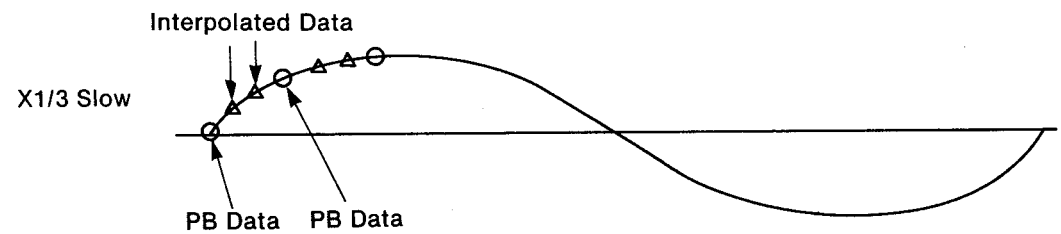

(b) Audio Slow Playback

Fig. 39 Audio Slow Playback

The PCM sound is muted when played back in the SHUTTLE mode. To monitor it in this mode it is necessary to record the PCM sound on the CUE track.

The PCM sound recorded on the four channels can be mixed together, or any desired chanell can be selected and mixed.

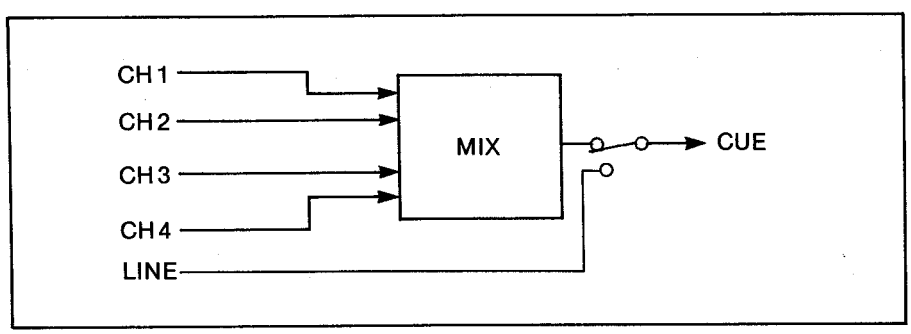

Fig. 40 Cue Selection

Trimming memory

In order to set an Audio IN point - which is more difficult than setting a Video IN point - register in the trimming memory the five second source sound data on the master VTR and another five second sound data on the slave VTR together with the T/C. In this way, the audio IN point can be set by the registered memories alone without having to run the tape.

12. System Control and Front Panel

Refer to the System control and Front Panel Block Diagrams.
The System control uses an 8 bit CPU (HD64180) which is a Z80 upwards compatible CPU.
The Communication Microcomputer controls communication of RS-422, RS-232C and GP-IB. RS-422 is used for the editing controller and RS-232C is used for connection to a personal computer or modem. A personal computer connected to the AJ-D350 can control it remotely, save or load internal setting files and check the diagnostic.

The purpose of the V/A microcomputer is follows.
- Diagnostic, Error rate monitoring
- Electronics VR
- Connection with V/A controller

The front panel display is a 640 dot x 200 dot EL panel which uses a 16 bit (68000) CPU to generate the graphics.

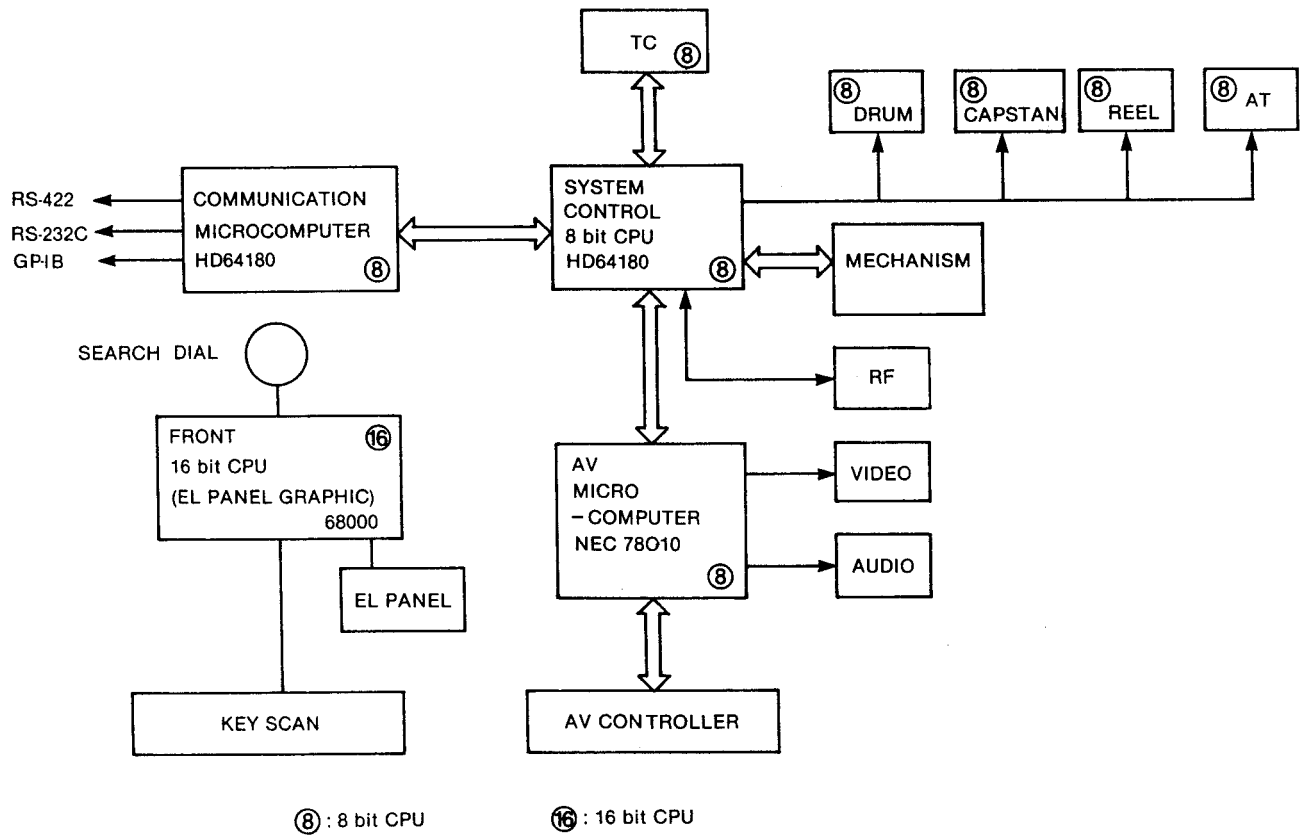

Fig. 41 System Control and Front Panel Overall Block Diagram

12-1. FRONT PANEL

The front panel of the AJ-D350 is tiltable. It can be separated from the machine and used as a remote controller via a 15m cable, through which it also derives a 24V supply. It can also be connected to either the front or rear of the machine (selected by a switch on the front panel).

The CPU used is a 16 bit (68000) processor.
The front panel uses an EL panel (Electro-luminescent panel). It is self illuminating and is more visible than backlighting varieties when used in direct sunlight.

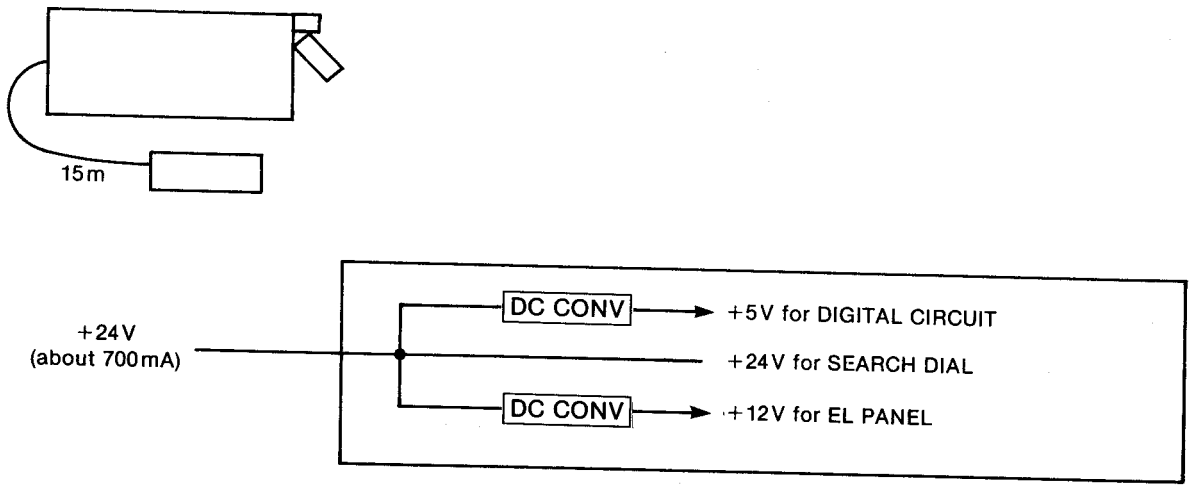

Fig. 42 Front Panel

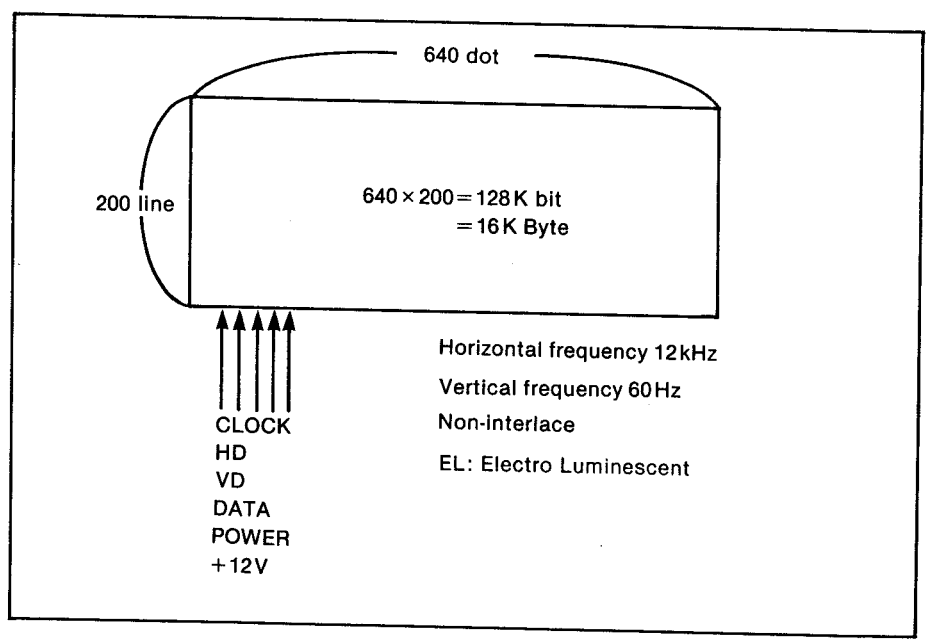

Fig. 43 Front Panel Display

AJ-D350 Front Block Diagram

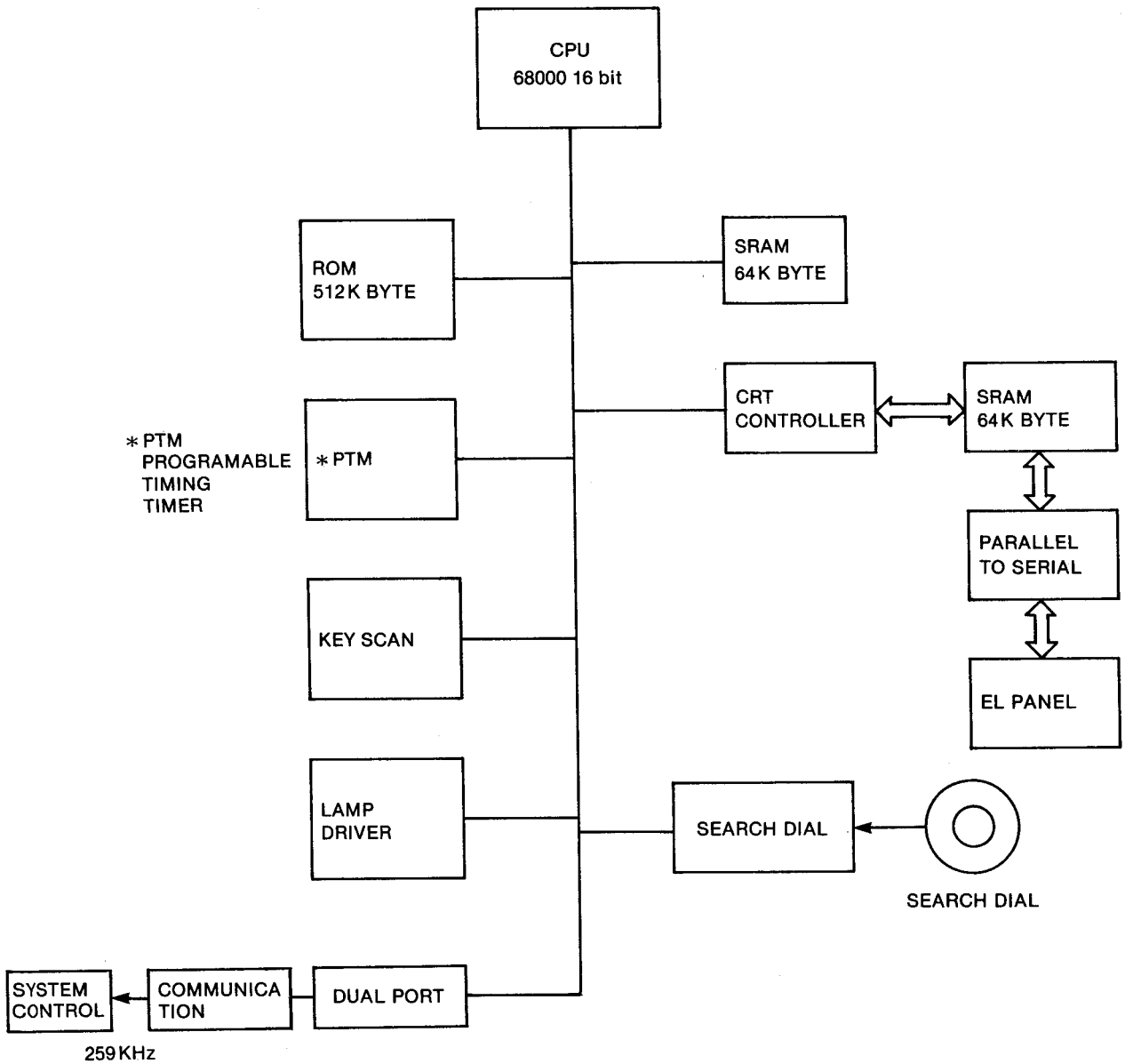

Fig. 44 Front Block Diagram

12-2. V/A Microcomputer (Video/Audio Microcomputer)

The functions of the V/A Microcomputer are:
Self Diagnostic
Electronics VR
Connection for the V/A controller.

Self Diagnostic function
The self diagnostic function is performed by pressing the test key on the front panel.
The V/A Microcomputer stores the test signal in ROM and compares the output data from the main block with the stored data. if they are different, error information is displayed on the front panel.

Electronics VR
The preset values of the Audio and Video are stored in the Electronics VR Memory.
The presetable levels are Video and Audio IN/OUT level, Chroma Phase, Chroma level, SCH and System SCH, etc.

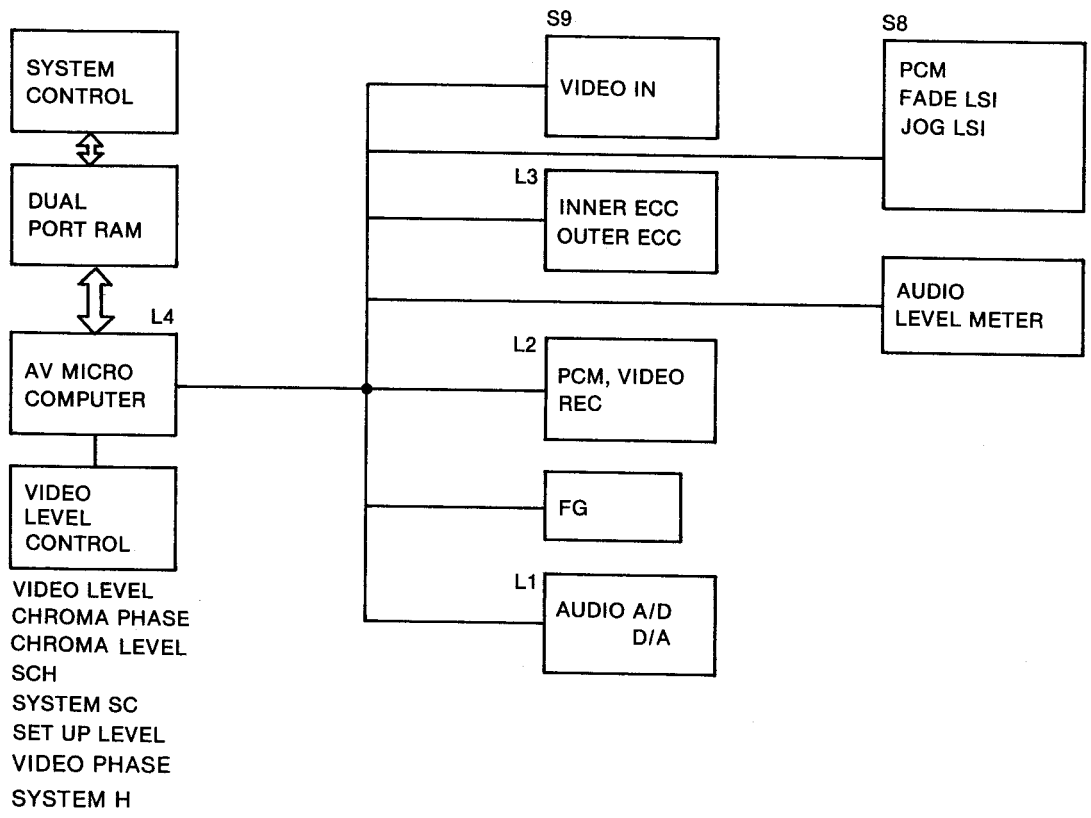

Fig. 45 V/A Microcomputer

12-3. SYSTEM CONTROL

The memory of the system control circuit uses Dual Port RAM which can be connected to 2 CPUs simultaneously.
The 8Kbyte memory is used to store the switch settings, this incorporates a backup battery with a life of more than 10 years. The D/A converter is used to control RF current.
Other functions of the system control circuit are: reel diameter calculation, communication with front panel, servo, time code, remote CPU, V/A CPU.

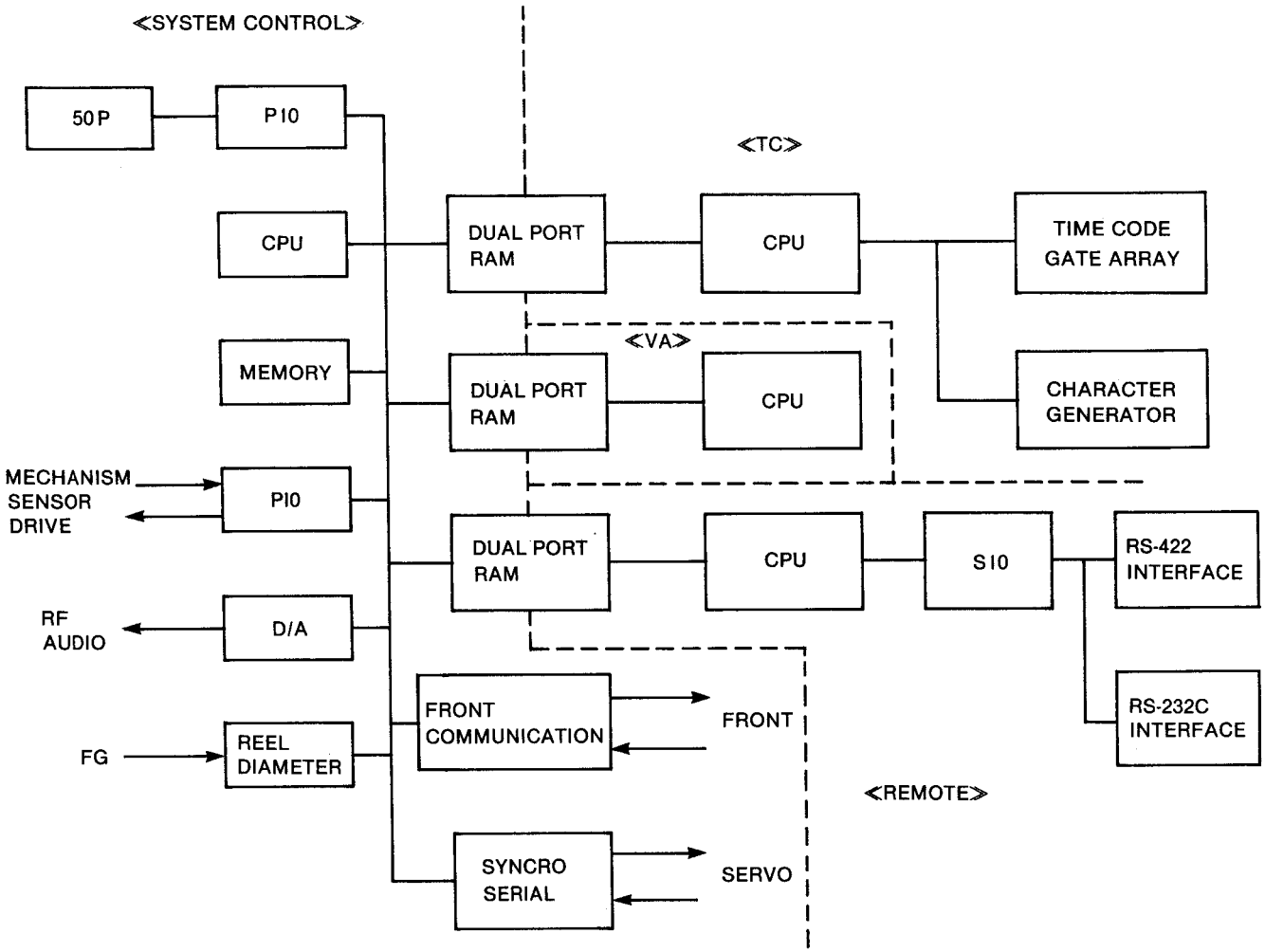

Fig. 46 System Control Block Diagram

13. Servo circuit

The servo circuit is divided into four control circuits : drum, capstan, reel and AT.

(1) Drum
NTSC 5400/1.001 rpm PAL 6000 rpm
(2) ±100x normal speed search
(3)Noiseless playback at -1 to +3x normal speed by the AT function
(4)Program play function: ±15%, 0.1% step
(expands the time compression through the use of external equipment.)
(5)Correction of the drum's relative speed
The drum speed and the central frequency of the RF PLL are changed.
(6)Identification of the track and the CF by the CTL duty
(7) Tape Speed Override function: ±15%, 1% step

13-1. Drum servo

Designed to control the software, an MN6750 used in its microcomputer.

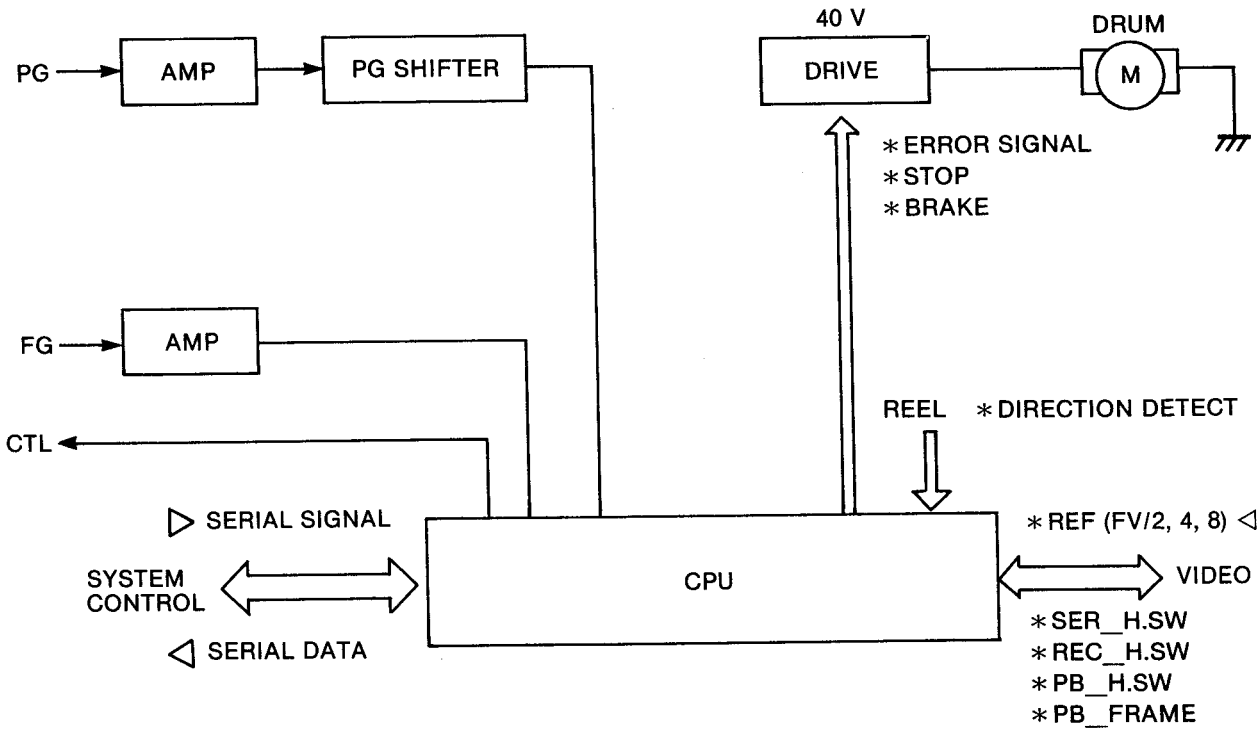

Fig. 47 Drum Servo Block Diagram

(1) Drum speed control
Data on the drum speed in each mode is fed from the CPU. The drum FG, used as feedback information on the drum speed, is an error signal which is fed to the drive circuit to control the rotation speed of the drum motor.

(2) Drum phase control
The FV/2 is used for the drum phase control reference signal. A frame pulse generated by the synchronizing pulse generator (L4), the FV/2 is locked with the incoming V and the reference V synchronizing pulses in the record and the playback modes, respectively.
The PG signal, used as the comparison signal, is shifted for mechanical reasons. To correct the shift, the PG shifter is used.
While the phase control is not performed in the SHUTTLE mode (at +/-3x or more normal speed), it is executed in the pitch control mode in accordance with the change in the frequency of the FV/2.

(3) REC CTL signal

The REC CTL signal is generated by the FV/2 which is synchronized with incoming V synchronizing pulse. The REC CTL signal, required in every track, is designated as 100 Hz signal for PAL and 90 Hz signal for NTSC. The CTL duty ratio is divided into 5 : 5, 4 : 6 and 6 : 4 to control the color framing as the case demands.

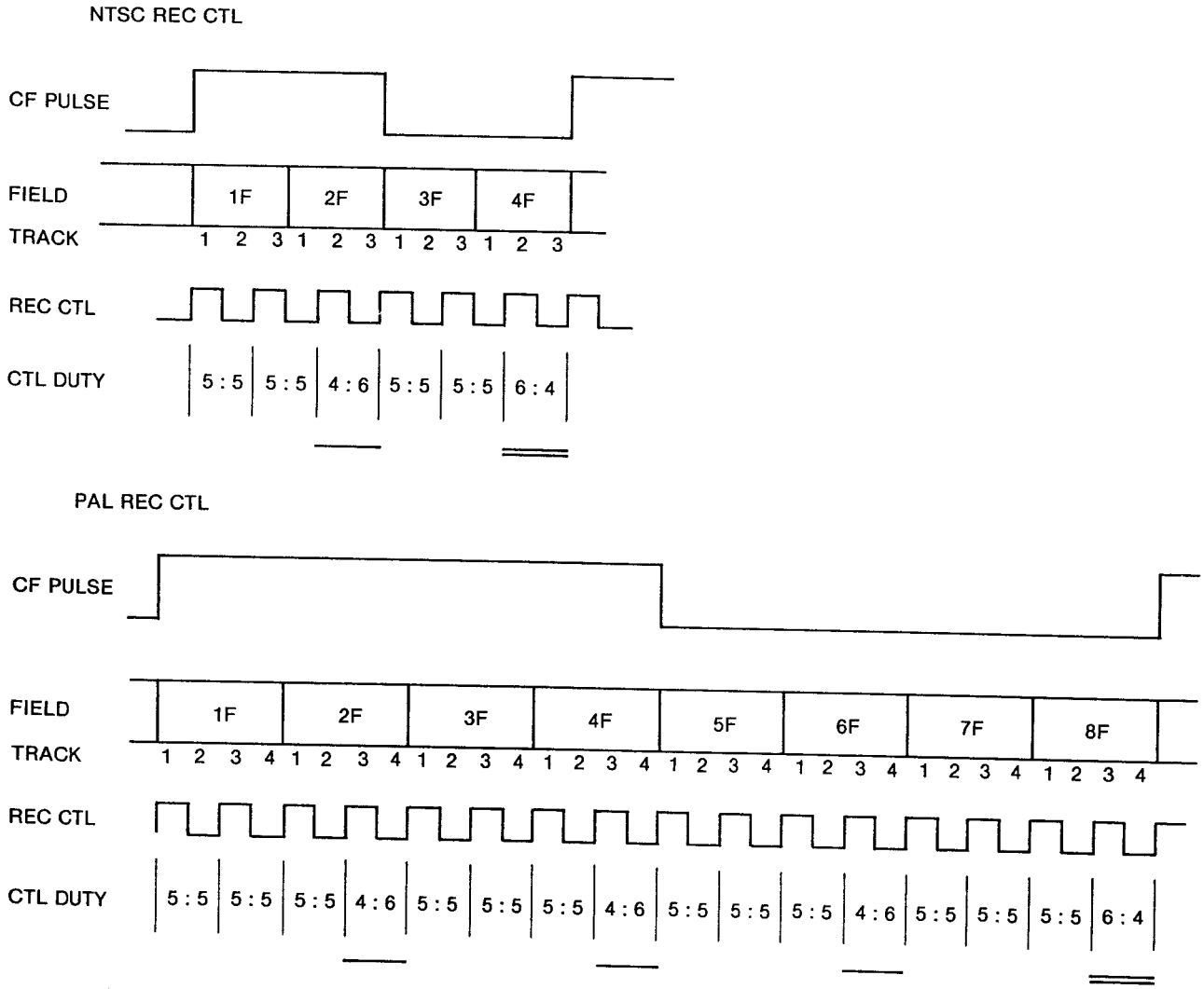

Fig. 48 Recording Control Pulse

(4) Drum FG

	NTSC	PAL
(a) FG gear tooth :	24	24
(b) FG frequency :	2160/1.001 Hz	2400 Hz
(c) FG composition :	Pattern Magnet	Pattern Magnet
(d) Drum rotation speed :	5400 rpm/1.001	6000 rpm at PB

13-2. Capstan servo

Similarly to the drum servo, the capstan servo is designed to be controlled by software in its microcomputer.
At speeds below and including three times normal speed, in forward, and in reverse, the pinch roller is in contact with the tape.

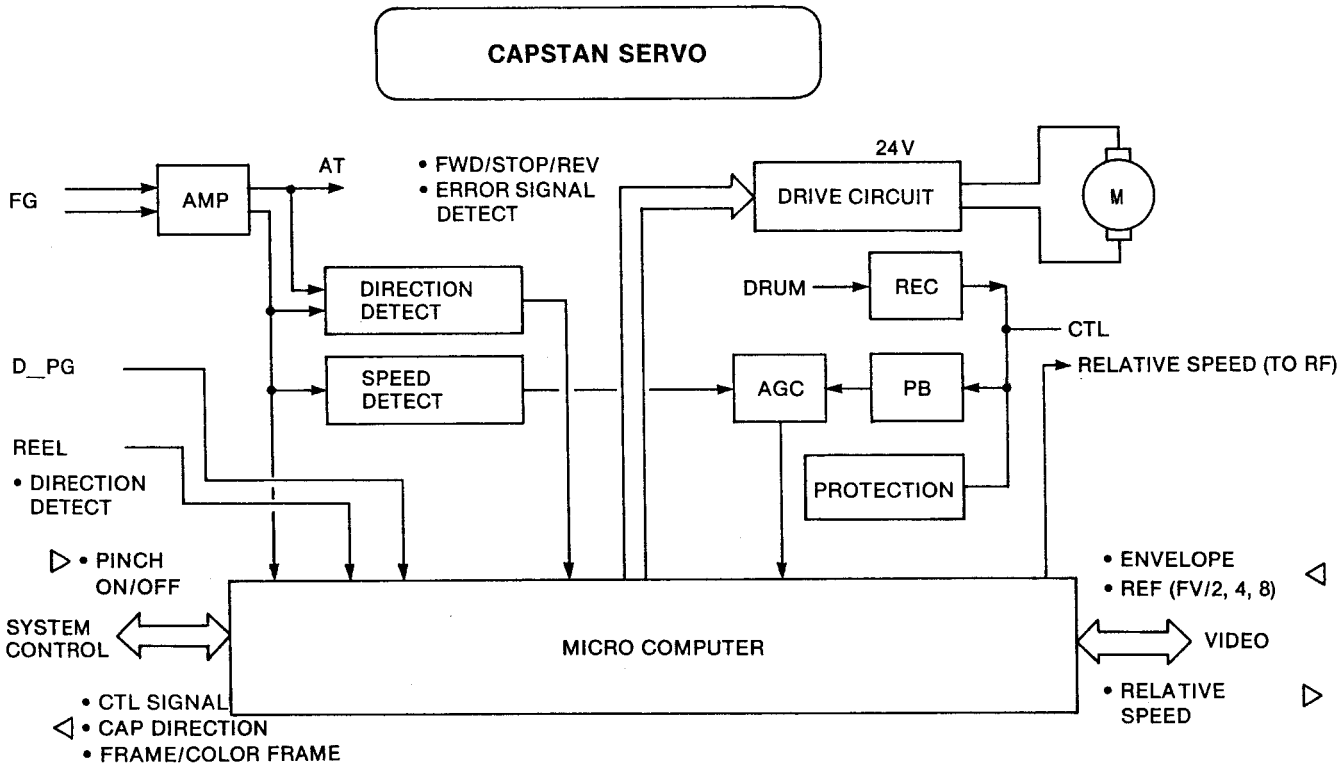

Fig. 49 Capstan Servo Block Diagram

(1) Capstan speed control
The capstan speed is controlled by the speed mode data from the system control and the feedback FG from the capstan motor.
This FG also detects the tape-running directions by using two FGs with phases different by 90 degrees.
(2) Capstan FG

	NTSC	PAL	REMARK
(a) Capstan rotation speed :	319.4 rpm	320.4 rpm	at PB
(b) Capstan variable range :	0 ~ 958 rpm	0 ~ 961 rpm	-3x ~ +3x
(c) Number of FG gear tooth :	501 pcs	501 pcs	
(d) FG frequency :	2670/1.001 Hz	2675 Hz	at PB
(e) FG variable range :	0 ~ 8002 Hz	0 ~ 8025 Hz	-3x ~ +3x
(f) FG composition :	MR Head/Magnet	MR Head/Magnet	

(3) Capstan phase control
The reference and the comparison signals for the capstan phase control are described as follows :

Mode	Reference	Comparison	Condition
REC	FV/2	Divided FG	
PB	FV/2,4,8	CTL	
INSERT	FV/2,4,8	CTL	
ASSEMBLE	FV/2,4,8	CTL	PREROLL
ASSEMBLE	FV/2,4,8	Divided FG with CTL reset	Editing

In the pitch control mode, the capstan servo performs the phase control by following the changes in the frequency of the FV/2, FV/4 and FV/8.

The FV/2, (30 Hz for NTSC and 25 Hz for PAL), is not used as the reference signal in the REC mode.
The reference signal used in the PB mode differs depending on the color framing modes : the FV/2 (30 Hz for NTSC, 25 Hz for PAL) is used in the 2F (2 field) mode, the FV/4 (15 Hz for NTSC, 12.5 Hz for PAL) in the 4F mode, and the FV/8 (none for NTSC, 6.25 Hz for PAL) in the 8F mode.
These different reference signals used in the PB mode above are also used in the insert mode depending on the color framing modes.
The assemble editing mode, held in the PB mode during the prerolling period, is turned into the REC mode when editing starts. However, the assemble editing mode's comparison signal used in the PB mode is different from that in the REC mode : the former is CTL signal and the latter divided FG. Therefore these different comparison signals are kept synchronized by resetting the divided FG to the CTL signal during the prerolling period.

13-3. Reel servo

The functions and features of the reel motor control are as follows :

(1) Torque control by DC
    When loading/unloading a tape
(2) Tension control of tape tension
    When the pinch roller is working
(3) Tape speed and tension control
    When FF/REW/SHTL speed
(4) Tape remaining calculation without timer roller
(5) Control of take-up reel without take-up side tension sensor

(1) When a tape is being loaded or unloaded, the torque of the reel motor is controlled by DC to prevent the tape tension from being too low or too high.

(2) In the normal and variable PB modes in which the pinch roller is applied, the tape speed and running direction are controlled by the capstan motor. At this time tension control is performed by the reels.
The tension data sent from the tape is detected by the tension pick-up to control the supply reel motor. The tension of the take-up reel is controlled by calculating the tape roll diameter, which is an open-loop control system.
For this control, the capstan accel compensation torque and tape diameter detection torque are used.

(3) The pinch roller is applied at -3 to +3x normal speed. In search mode beyond that speed, the take-up reel controls the tape speed, and the supply reel the tension.
For example, in the FF mode the take-up reel executes the tape speed control and the supply reel the tension control. In the REW mode, the tape speed is controlled by the supply reel and the tension by the take-up reel.

(4) Elimination of timer roller
The timer roller used in the MII was designed to feed the tape speed data to the system controller at all times by directly contacting with the tape. The system controller worked to indicate the tape remaining and to switch the torque of each reel by calculating the tape roll diameter through the analysis of the tape speed data FG and of the reel FG.
The timer roller, used so far to calculate the roll diameter of the take-up and supply reels,has now been abolished to improve the accuracy of the speed and the tension controls by getting rid of the calculation errors caused by the timer roller's slippage or deterioration with age. The abolition of the timer roller in this design has also helped simplify the mechanism of the reel servo.

REEL SERVO

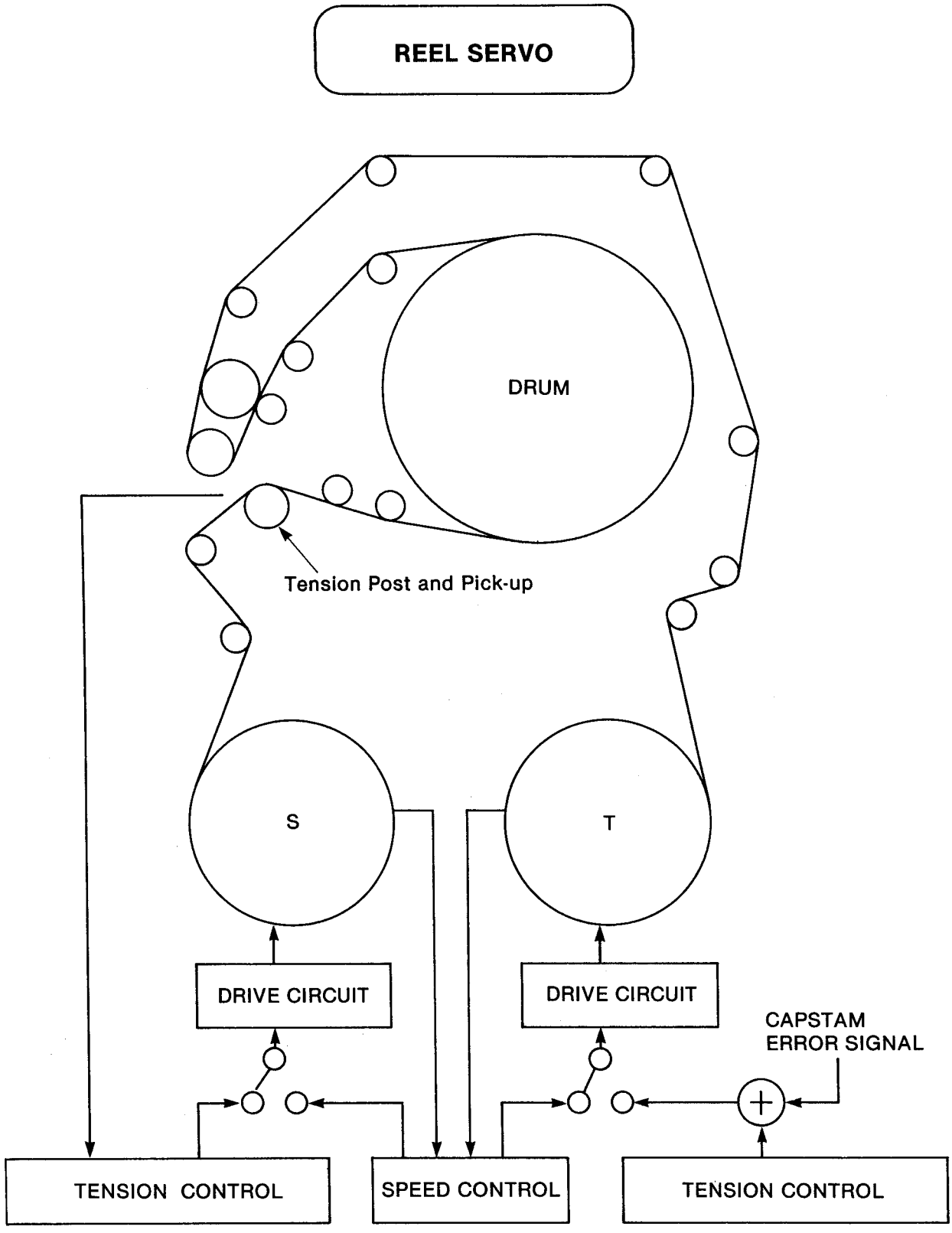

Fig. 50 Reel Servo Block Diagram

14. Auto Tracking Circuit

The main characteristics of the Auto Tracking Circuit are shown below.

1. Variable Playback
   -1x through +3x (Field Playback)
   0x through +2x (Field or Frame Playback selectable by menu)

2. JOG
   -1x through +3x

3. Strain Gauge control

4. Maximum Envelope control

5. Track angle following control

14-1. AT Head Assignment

The angle between AT and REC heads is 90 degrees.
The operation of the AT heads is different when used in normal playback and confidence playback modes.

During normal playback, the AT heads are one frame (PAL eight tracks, NTSC six tracks) and 90 degrees advanced - AT head A plays the track recorded by REC head A, and AT head B plays the track recorded by REC head B.

During confidence playback the AT heads are delayed 90 degrees with respect to the REC heads, and AT head A plays the track recorded by REC head B and AT head B plays the track recorded by REC head A.

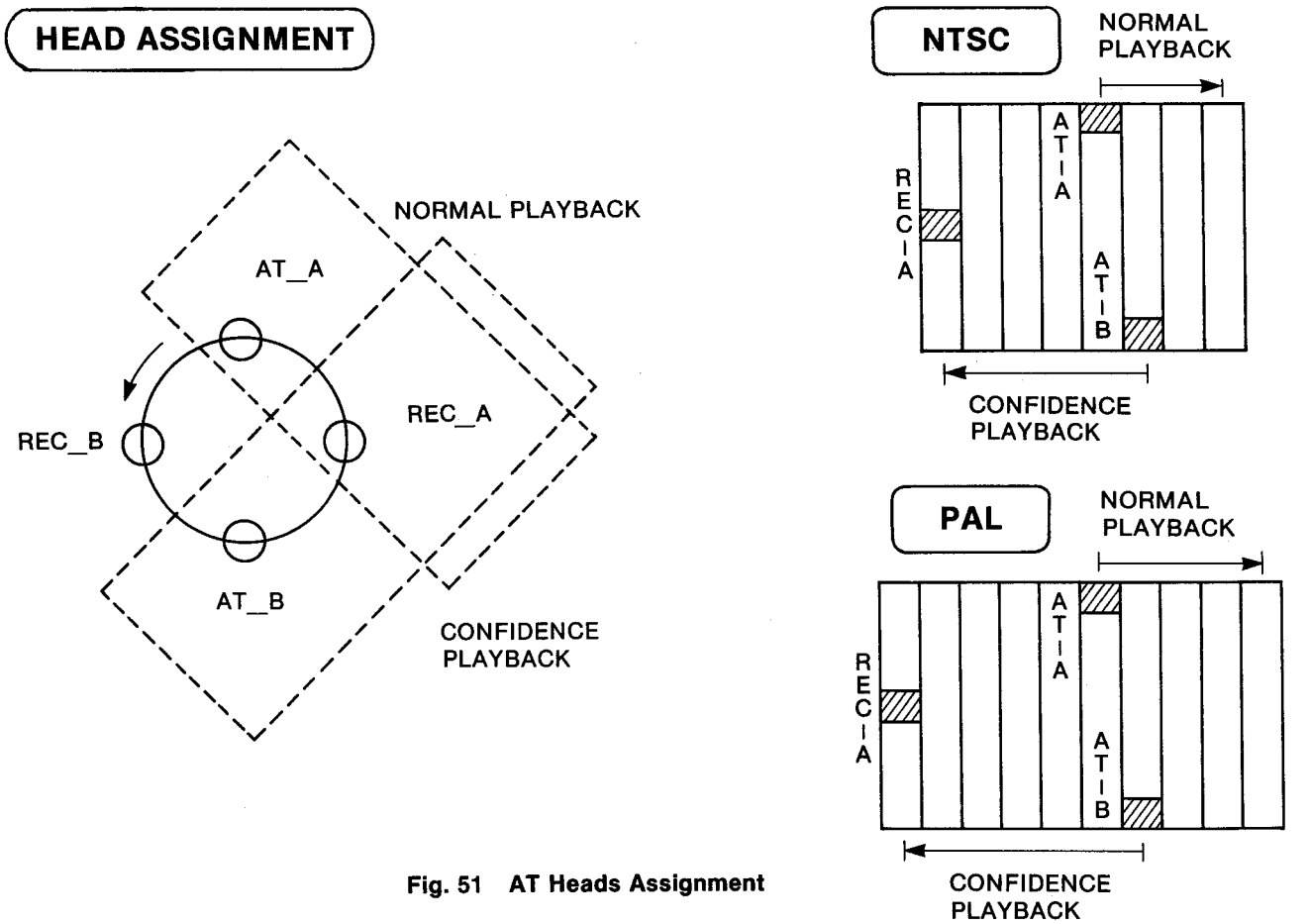

Fig. 51 AT Heads Assignment

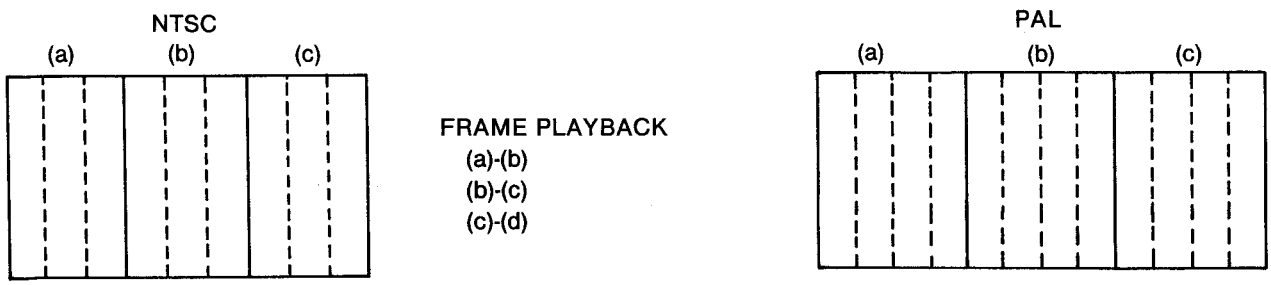

Fig. 52 Frame Playback

14-2. AT Head Drive Counter

To enable the AT head to follow the track accurately in variable playback mode, it must be supplied with the correct voltage. The Drive Counters (two for each head; A and B) calculate this voltage.

One volt moves the AT head 1 µm (maximum voltage +/- 450 volts).

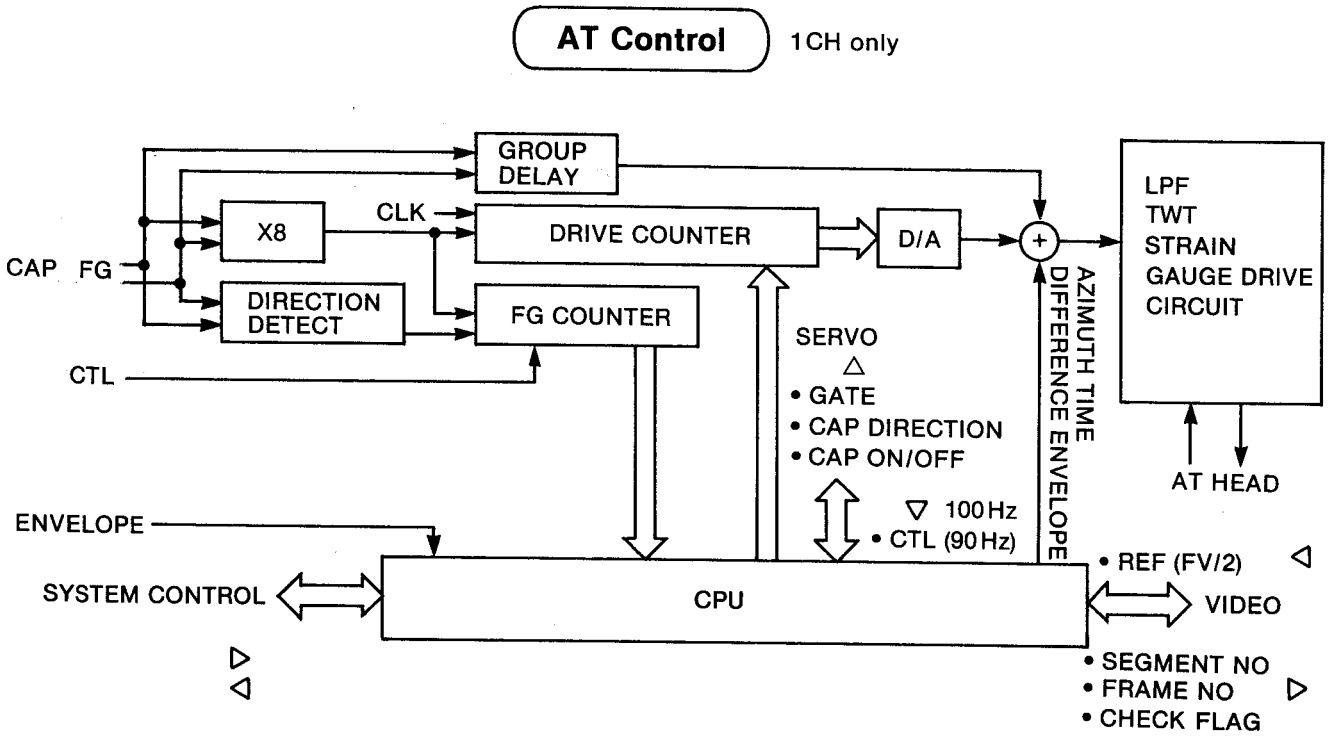

Fig. 53 Auto Tracking Block Diagram

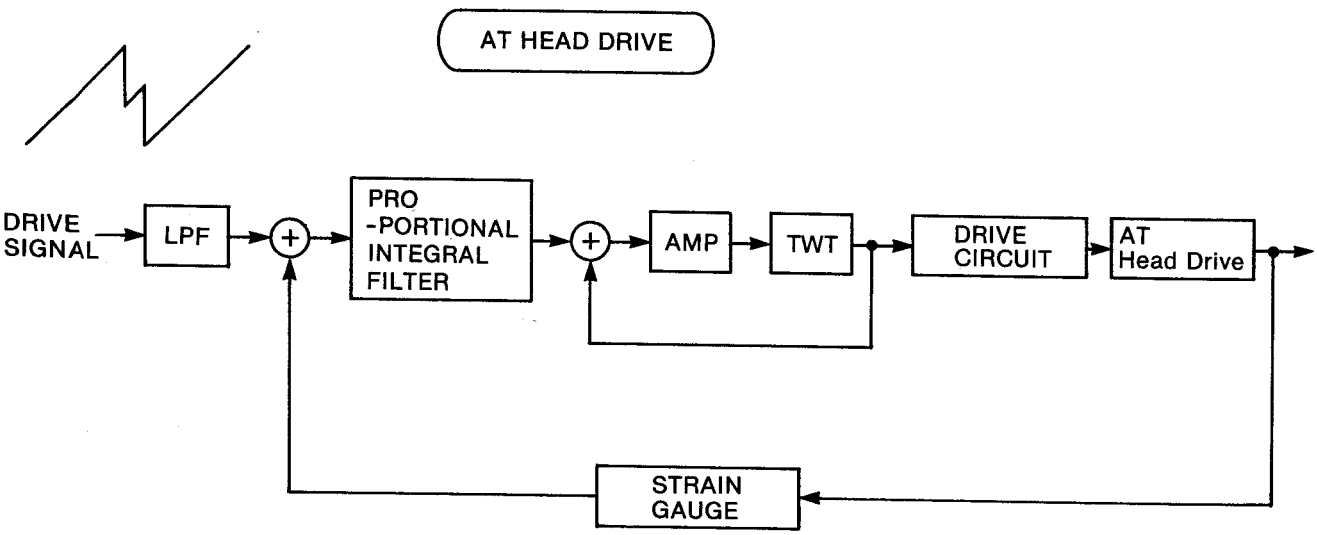

Fig. 54 AT Head Drive Circuit

3 X Playback

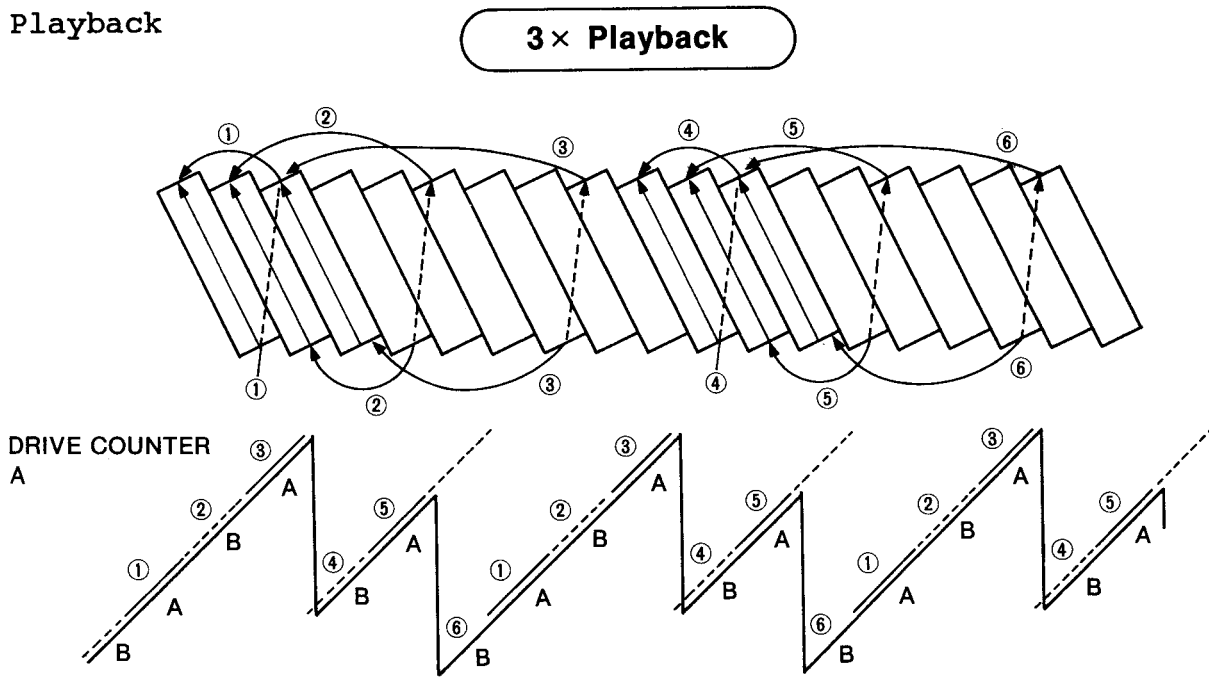

Fig. 55 Drive Counter Waveform

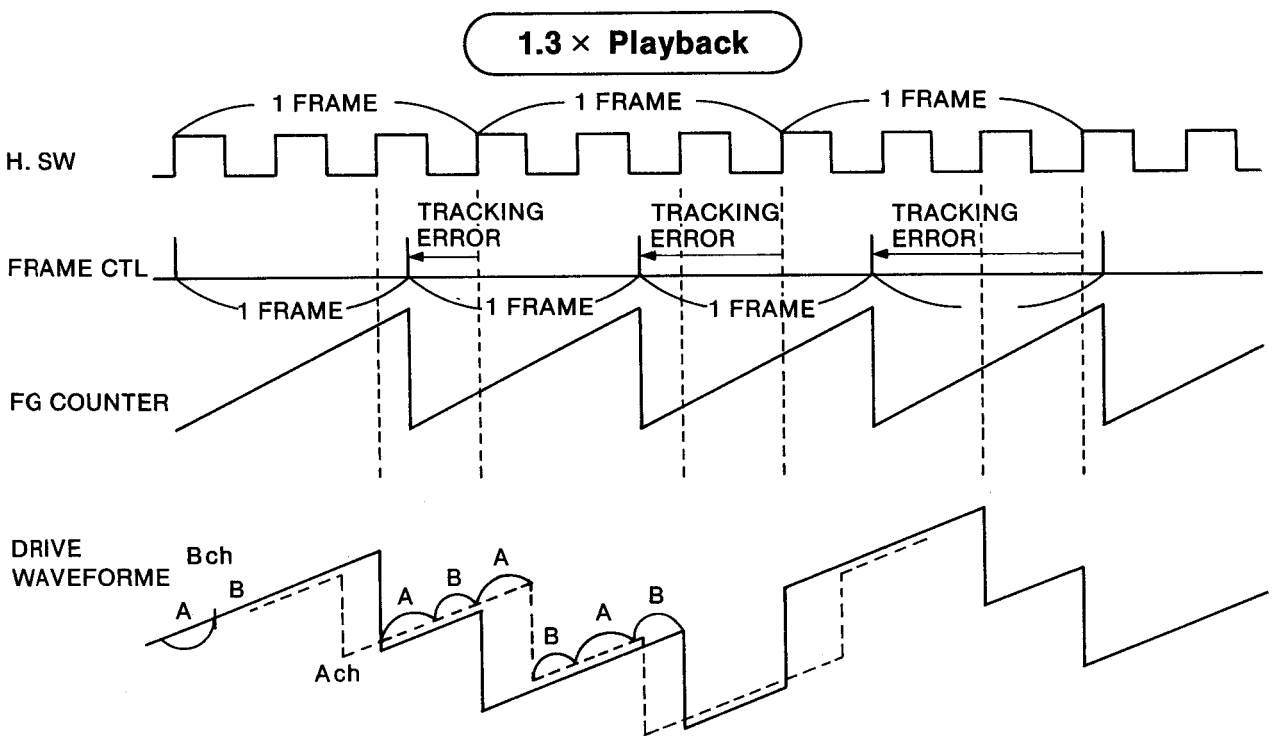

Fig. 56 FG Counter and Drive Waveform

14-3. Tracking Pattern Generator

The basic AT head movement is decided by the Tracking pattern generator and it is consist of the Drive counter and FG counter.
The Drive counter determines the trace angle, and the FG circuit determines the tracking start offset.
The Drive counter starts its count on the frame control pulse (CTL) and is reset by the next frame control pulse. The FG counter counts the capstan FG and displays the actual tape speed. The frame CTL is the start pulse of each frame and is produced from normal CTL.
During one frame, the number of FG is same but the duration of the frame is different, therefore the FG counters slope angle is different. The following figure shows the FG counters slope angle in 1/2x, 1x and 2x playback speed.
The output of the FG counter is subtracted from the internal clock count to produce the drive counter output.
The internal clock counter always counts the same number as the FG at normal playback speed, therefore the slope angle of the drive counter drive counter during playback is zero degrees.
The tracking error is calculated using the phase difference between the frame CTL and the frame start of the head switching.
The FG counter starts count at the CTL pulse and stops count at next CTL pulse, and the FG counter makes sawtooth waveform.
This waveform is sampled and held by Head swithing pulse.
The sample and hold count number shows the tracking error, and the number is sent to the drive counter as preset value to make offset.

14-4. Auto Tracking Block Diagram

The Auto Tracking Circuit consists of the following :

(1) CPU
The CPU incorporates the A/D and D/A converters. The CPU communicates with the system control circuit, and produces the AT control signals.

(2) Drive Counter
The Drive Counter sends the track angle and tracking error information to the CPU. The drive counter also controls AT head movement.

(3) Azimuth Time Difference Circuit
Tracks CH0 and CH 1 both have a 20 degree azimuth angle but they are offset with respect to one another.
If the tracking is adjusted to the left, the CH0 sync timing is delayed behind CH1 sync. If the tracking is adjusted to the right, CH0 sync timing is advanced in relation to CH1 sync. To control the movement of the AT heads in order that CH0 and CH1 sync timing is zero, tracking is performed correctly throughout the track.

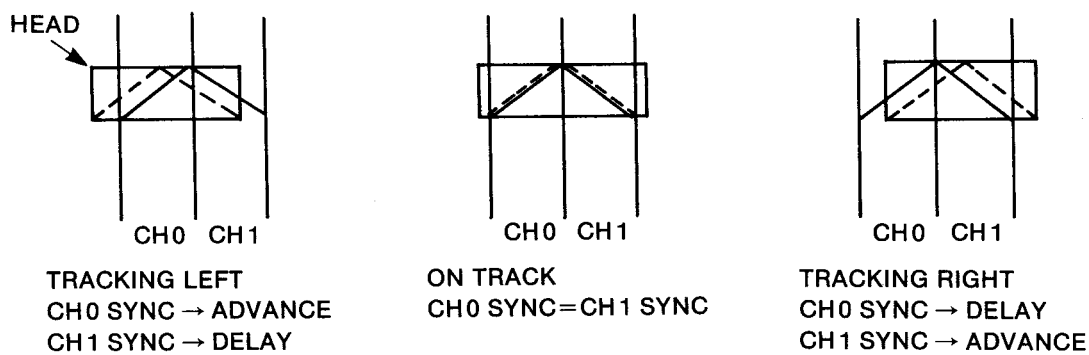

Fig. 57 Azimuth Time Differenece

(4) Group Delay, LPF, TWT.
The Group Delay circuit compensates the frequency characteristic of the AT head drive signal.
LPF : Smooths the drive waveform.
TWT (Twin-T filter) eliminates the 540Hz mechanical resonance frequency from the AT drive signal and thereby prevents head damage.

14-5. Strain Gauge Control

This circuit ensures that the AT head movement is linear by compensating for non-linearity.

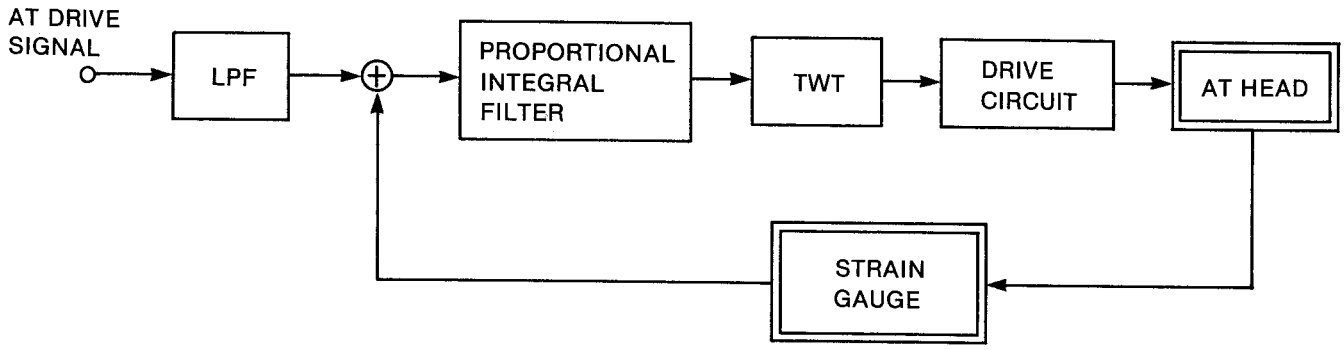

Fig. 58 Strain Gauge Control

15. Diagnostics Overview

The Aims of the Diagnostic System

1. To assist the operator during normal operations.
   (Alarm displays and Help function)

2. To Identify the cause of system errors-faults, operator error.

3. To Inform the maintenance staff of the action necessary to rectify errors.

4. To implement remote self diagnostics enabling communication of system status to a service headquarters.

Diagnostic Function

The diagnostic function automatically monitors the system status, displays when errors occur and guides the user into how the error may be overcome.

The system can distinguish
-Operator Error,
-Circuit Error,
-Mechanism Error
-Communication Error.

15-1. Setup Functions

The setup function allows the VTR settings to be stored in memory. The set-up files include operational set-up details such as tracking, record current, audio and video signal levels. A factory default set-up file is provided as is a configurable standard user file. The set-up files are loaded to become the current VTR setting.

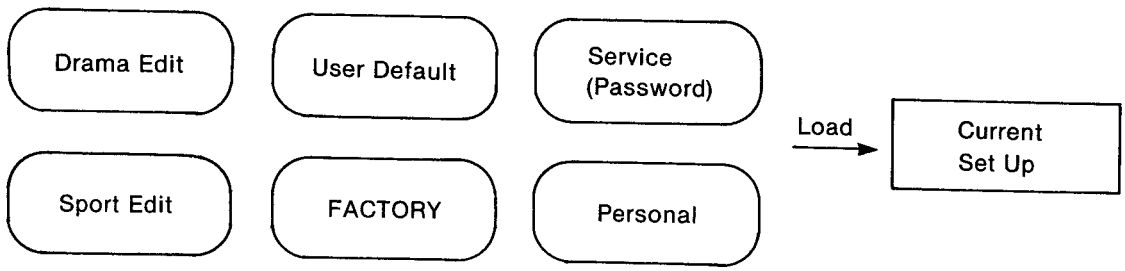

Fig. 59 User Files

15-2. Communication Function

The communication system will allow service engineers to interrogate the status of the VTR from a remote location. The basic concept is that all the self diagnostics will be able to be remotely controlled. Software will be developed allowing the diagnostics to be controlled from a (laptop) PC.

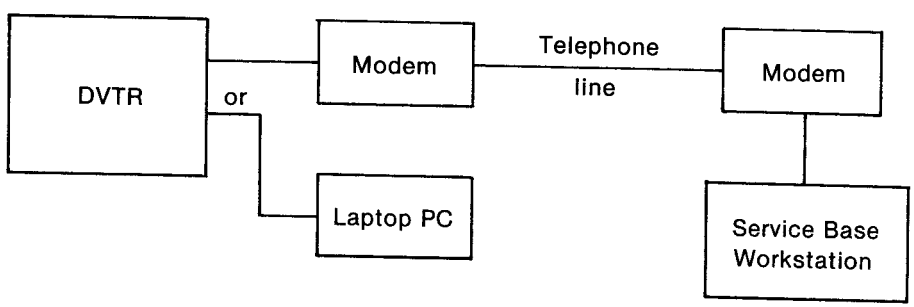

Fig. 60 PC Communication

The communication system will allow the complexities of the self diagnostics to be hidden from the VTR user. To implement complete control of the self diagnostics from the VTR would need many complex menus and place a large demand upon the system resources. Controlling the system from a PC will allow more sophisticated control of the diagnostic system. The software developed for the PC will allow:

-Detailed control of the diagnostic system
-Loglist maintenance
-Error rate monitoring
-VTR control
-User data set up

15-3. Error Rate Measurement

*1 Flag count from inner decoder-counts number of errors after inner correction

*2 Flag count from outer decoder-counts number of uncorrectale errors

*3 Compare input and output in record-counts number of different samples

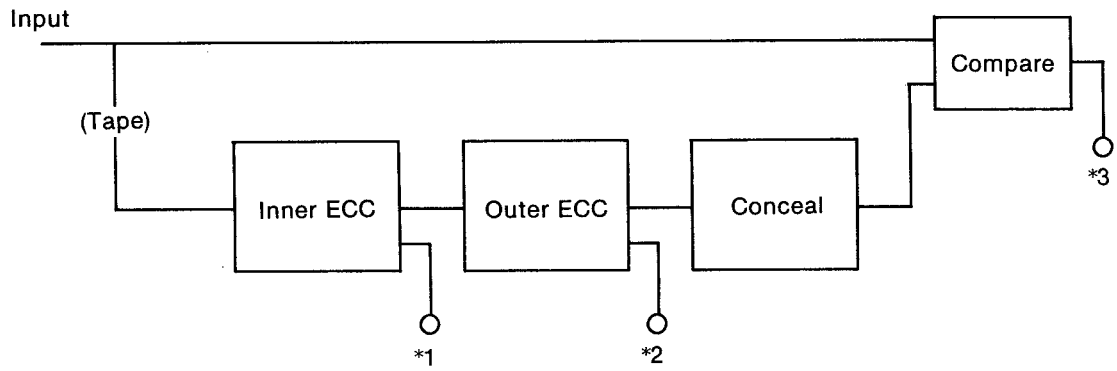

Fig. 61 Error Rate Check

15-4. Logfile

A user threshold can be set for all the error rate measurement methods. If the threshold is exceeded details are recorded in the LOGFILE. Recorded with the error information are the relevant:

-Time code value
-Field (even/odd)
-Head details

15-5. Monitoring

There are three stages of error indication on the VTR front panel.

Stage 1 : No errors over user set threshold value

Stage 2 : Small number of errors over threshold value

Stage 3 : Large number of errors over threshold value Action is required.

15-6. Video Test Screen

TEST FUNCTIONS

1) CHECK TEST : compare video signal data, which are continuously input and processed in each block, and judge the quality of the data in 10 frames.
2) BY PASS TEST : by pass signals of each block so that abnormal points can be found on the monitor screen to make the judgements.

OPERATIONS

1) CHECK TEST : * When pressing F1 (CHECK) button, function part flashes in rapid cycle. (Approximately 100 m SEC is required to obtain results)

*When the result is figured out, corresponding mode number flushes.
*flushing continues until when BY PASS TEST is selected, when the CHECK TEST is selected, or when this mode is released by selecting exit.

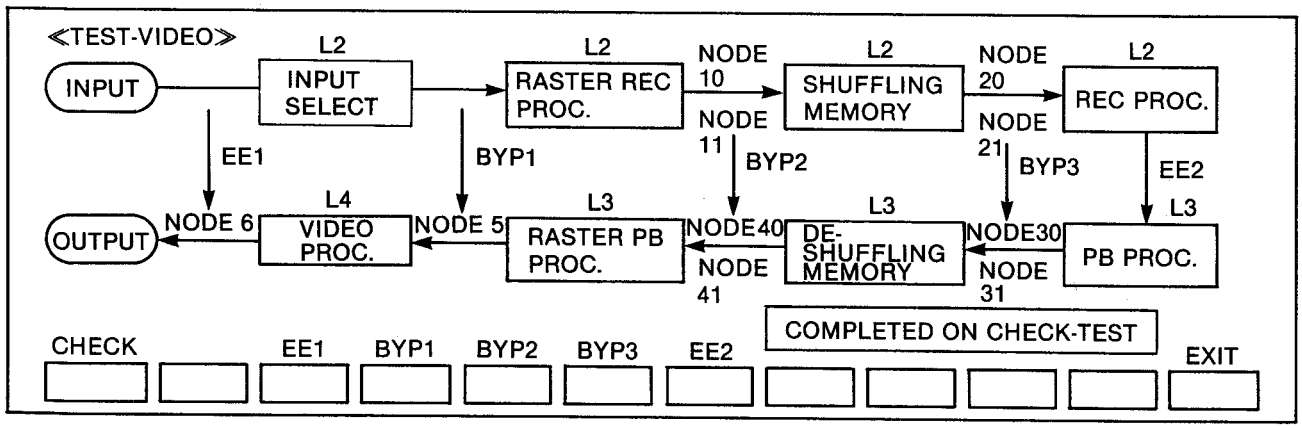

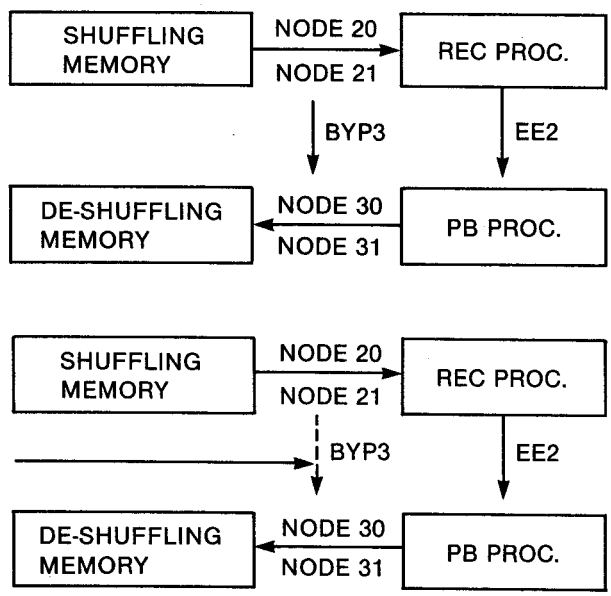

Fig. 62 Video Test Menu

Service Manual

Maintenance
Procedures
Mechanical
Adjustments

Panasonic
Broadcast Systems

MAINTENANCE AND MECHANICAL ADJUSTMENT PROCEDURES

CONTENTS

1. AJ-D350 MAINTENANCE PARTS CHART AND PARTS LOCATION 2-1
SERVICE FIXTURES & TOOLS 2-2

2. DISASSEMBLY PROCEDURES 2-5
2-1. TOP PANEL REMOVAL 2-5
2-2. BOTTOM PANEL REMOVAL 2-5
2-3. FRONT LOADING (CARRIAGE UNIT) REMOVAL 2-5
2-4. L1, L2, L3, L4 P.C. BOARD SHIELD PLATE REMOVAL 2-6
2-5. POWER BOX REMOVAL 2-7

3. AJ-D350 MANUAL TAPE EJECT 2-8

4. RECOMMENDED CLEANING AND CONFIRMATION PROCEDURES 2-9
4-1. MATERIALS REQUIRED 2-9
4-2. RECOMMENDED SCHEDULE 2-9
4-3. CLEANING PROCEDURES 2-10
4-4. LUBRICATION OF THE GEARS AND SLIDING SURFACES 2-14

5. MAIN MECHANISM ADJUSTMENT PROCEDURES 2-17
5-1. TAPE TRANSPORTATION POSTS NAME 2-17
5-2. TENTELO METER CALIBRATION 2-18
5-3. SENSOR AMP OFFSET ADJUSTMENT 2-19
5-4. SUPPLY SENSOR TENSION ADJUSTMENT 2-20
5-5. TAKE UP REEL TORQUE ADJUSTMENT 2-21
5-6. SUPPLY REEL TORQUE ADJUSTMENT 2-22
5-7. LOADING TORQUE ADJUSTMENT 2-23
5-8. SUPPLY (FWD.) TENSION ADJUSTMENT 2-23
TAPE TRANSPORTATION POSTS LIMIT POSITION TABLE 2-24
POST HEIGHT PRE-ADJUSTMENT (FACTORY ADJUSTMENT) 2-25
MICRO METER SETTING 2-26
5-10. P3 POST INCLINED ANGLE ADJUSTMENT (FACTORY ADJUSTMENT ONLY) 2-27
5-11. INCLINED POST ANGLE ADJUSTMENT (FACTORY ADJSUTMENT ONLY) 2-27
5-12. INCLINED POST INCLINED ANGLE ADJUSTMENT 2 (FACTORY ADJUSTMENT ONLY) 2-28
5-13. P3 POST HEIGHT ADJUSTMENT 2-29
5-14. P6 POST HEIGHT ADJUSTMENT 2-30
5-15. P7, P8, P9, P10 AND P11 POST HEIGHT ADJUSTMENT 2-31
5-16. P4, P5 POST HEIGHT ADJUSTMENT 2-32
5-17. A/C HEAD ADJUSTMENT FLOW CHART 2-33
5-17-1. A/C HEAD TILT CONFIRMATION 2-33-1
5-18. A/C HEAD TILT ADJUSTMENT 2-34
5-19. A/C HEAD HEIGHT ADJUSTMENT 2-36
5-20. A/C HEAD AZIMUTH ADJUSTMENT 2-37
5-21. CTL OUTPUT CONFIRMATION 2-38
5-22. A/C HEAD HORIZONTAL POSITION COARSE ADJUSTMENT 2-39

5-23 A/C HEAD HORIZONTAL POSITION FINE ADJUSTMENT 2-40
5-24 FINAL CONFIRMATION OF TRACKING OPTIMIZE 2-41
5-25 PG SHIFTER ADJUSTMENT 2-42

6. MAJOR MECHANISM PARTS REPLACEMENT AND ADJUSTMENT PROCEDURES 2-43

6-1. GENERAL 2-43
6-2. CENTER DRUM REPLACEMENT AND ADJUSTMENT 2-43
6-3. DRUM UNIT REPLACEMENT 2-49
6-4. S-REEL BASE UNIT/T-REEL BASE UNIT REPLACEMENT AND ADJUSTMENT 2-51
6-5. SUPPLY BRAKE UNIT AND TAKE UP BRAKE UNIT REPLACEMENT 2-53
6-6. SUPPLY BRAKE SOLENOID AND TAKE UP BRAKE SOLENOID REPLACEMENT 2-54
6-7. PINCH ARM UNIT REPLACEMENT 2-55
6-8. A/C HEAD REPLACEMENT 2-56
6-9. FULL ERASE HEAD REPLACEMENT AND ADJUSTMENT 2-58
6-10. POST ROLLER UNIT REPLACEMENT 2-58
6-11. CAPSTAN HOUSING UNIT REPLACEMENT AND ADJUSTMENT 2-59
6-12. PINCH SOLENOID AND PINCH PRESS LEVER REPLACEMENT AND ADJUSTMENT 2-60
6-15. TENSION SPRING PLATE REPLACEMENT 2-62
6-16. LOADING MOTOR AND LOADING MOTOR BELT REPLACEMENT 2-63
6-17. FRONT LOADING MOTOR REPLACEMENT 2-64
6-18. FAN MOTOR REPLACEMENT 2-65
6-19. EJECT SWITCH REPLACEMENT 2-66
6-20. POWER SWITCH REPLACEMENT 2-66
6-21. IP BASE UNIT REPLACEMENT 2-67
6-22. CAM GEAR REPLACEMENT AND ADJUSTMENT 2-68
6-23. RING ROLLER UNIT REPLACEMENT 2-69
6-24. SUB LOADING MOTOR REPLACEMENT 2-69
6-25. STOPPER SOLENOID REPLACEMENT AND ADJUSTMENT 2-70
6-26. WORM MOTOR UNIT REPLACEMENT (Reel Position Change Motor) 2-71
6-27. LOADING/UNLOADING, SUB LOADING/SUB UNLOADING COMPLETION SWITCHES POSITION ADJUSTMENT 2-72
6-28. CLEANER ROLLER REPLACEMENT 2-74
6-29. CLEANER SOLENOID REPLACEMENT AND ADJUSTMENT 2-74
6-30. SUPPLY REEL TABLE AND TAKE UP REEL REPLACEMENT AND ADJUSTMENT 2-76
6-31. CASSETTE IN SW ADJUSTMENT 2-77
6-32. V PHOTO SW ADJUSTMENT 2-77
6-33. UD PHOTO SW ADJUSTMENT 2-78
6-34. AC HEAD CLEANER UNIT REPLACEMENT 2-79
6-35. AC HEAD CLEANER PAD REPLACEMENT 2-80

MAINTENANCE AND MECHANICAL ADJUSTMENT PROCEDURES

1. AJ-D350 Maintenance Parts Chart and Parts Location

Location No.	Name		Part Number	Using Hour (Refer to HEAD ROTATION) 1500	3000	4500	6000	7500	9000	10500	12000	15000	24000	Page
1 *	Center Drum Unit		VEH0666KIT (E) VEH0665KIT (P)	500hr and Measure 250hr each										2-48
2	Drum Unit		VEG1189KIT (E) VEG1188KIT (P)	5000hr each										2-54
3	Slip Ring Unit		VXS0129	Replace 2500hr each										2-48
4	Pinch Roller Arm Unit		VXL2106	●	●	●	●	●	●	●	●	●	●	2-60
5	Cleaner Roller		VXP1326	●	●	●	●	●	●	●	●	●	●	2-79
6	Loading Motor Belt		VDV0156	●	●	●	●	●	●	●	●	●	●	2-68
7	Tension Adj Plate Unit		VXA4395		●		●		●		●	●	●	2-67
8	Fan Motor		VRF0063		●		●		●		●	●	●	2-70
9	Gears		—		◎		◎		◎		◎	◎	◎	
10	Tape Tension		—		○		○		○		○	○	○	
11	S Reel Table		VXR0230				●				●		●	2-56
12	T Reel Table		VXR0230				●				●		●	2-56
13	A/C Head Unit		VED0158				●				●		●	2-61
14	Full Erase Head		VBS0040				●				●		●	2-63
15	Capstan Housing Unit		VXD0110				●				●		●	2-64
16	Pinch Solenoid		VSJ0101				●				●		●	2-65
17	Pinch Press Lever Unit		VXL2100				●				●		●	2-65
18	Eject Switch		VSP0543				●				●		●	2-71
19	Inclined Post Base Unit		VXA4397				●				●		●	2-72
20	Ring Roller		—				△				△		△	2-74
21	Brake Torque		—				○				○		○	
22	Supply Brake Unit		VXL2119								●		●	2-58
23	Take Up Brake Unit		VXL2119								●		●	2-58
24	S Brake Solenoid		VSJ0100								●		●	2-59
25	T Brake Solenoid		VSJ0100								●		●	2-59
26	Loading Motor		VEM0323								●		●	2-68
27	Front Loading Motor		VEM0393								●		●	2-69
28	Power Switch		VSW0043								●		●	2-71
29	Cleaner Solenoid		VSJ0109								●		●	2-79
30	Sub-Loading Motor		VEM0395								●		●	2-74
31	Worm Motor Unit		VEM0397								●		●	2-76
32	Post Roller with Bearing	P1	VXP1293								●		●	2-63
33		P2	VXP0821								●		●	2-63
33		P3	VXP1429								●		●	2-63
34		P4	VXP0938								●		●	2-63
34		P5, 6, 7	VXP0819								●		●	2-63
35	Cam Gear		VDG0760									●		2-73
36	Stopper Solenoid		VSJ0102									●		2-75
37	Post Roller with Bearing	P9, 10, 11	VXP0821										●	2-63
38		P12	VXP1293										●	2-63
39		P8	VXP1294										●	2-63
40	A/C Head Cleaner Pad		VMF0367	●	●	●	●	●	●	●	●	●	●	2-85

Remark; ●: Replacement, ○: Confirmation or Adjustment, ◎: Grease Up, △: Cleaning
*Center Drum adjustment procedures are informed by Technical Information.
*Using Hour is referred to HEAD ROTATION HOUR on TEST MENU.
*● of Replacement time is Panasonic recommendation time.

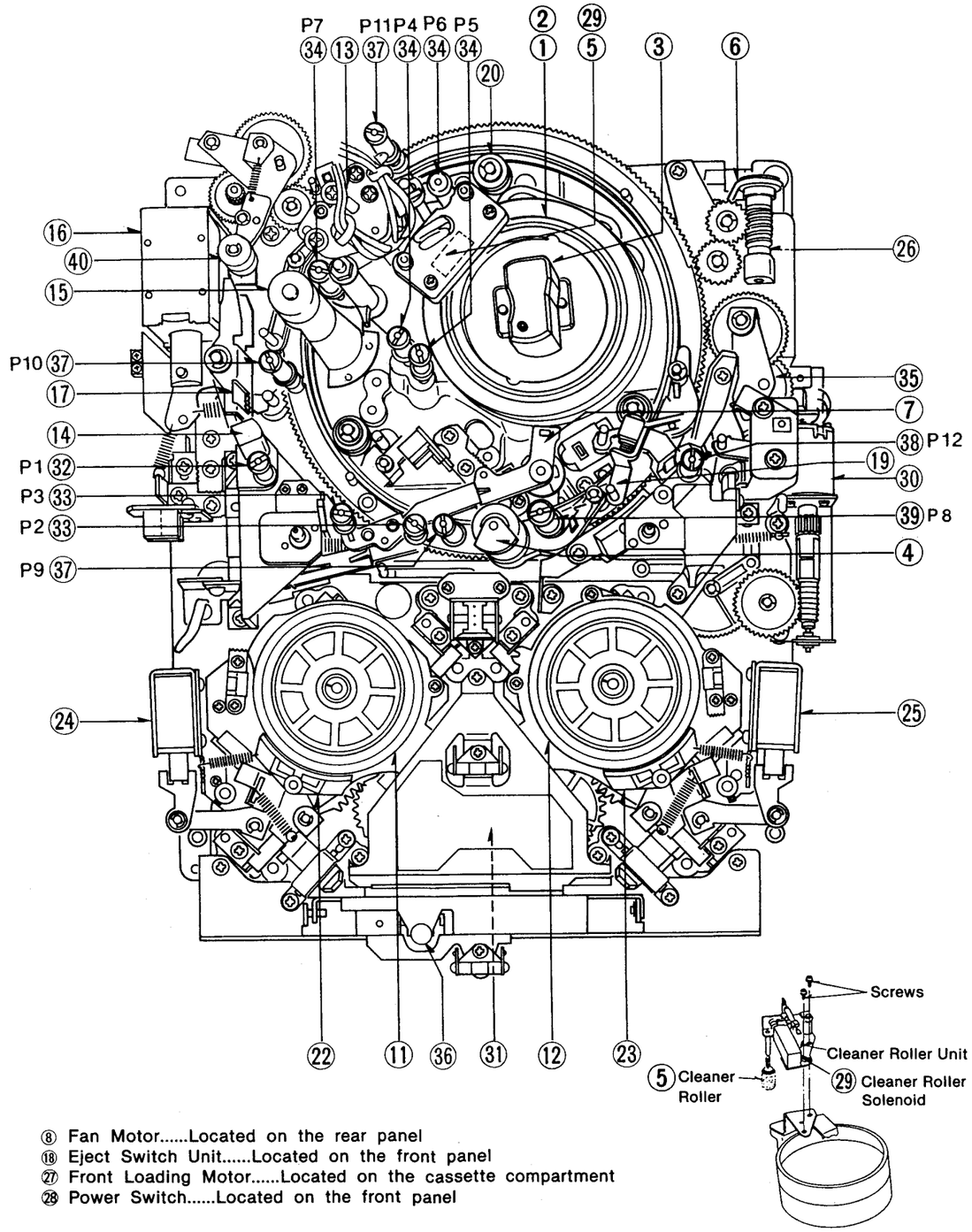

⑧ Fan Motor.....Located on the rear panel
⑱ Eject Switch Unit.....Located on the front panel
㉗ Front Loading Motor.....Located on the cassette compartment
㉘ Power Switch.....Located on the front panel

The specified fixtures and tools must be used to conduct adjustment requiring a fixture.

The following fixtures and tools are required to conduct complete Mechanical Adjustments.

Servicing Fixtures & Tools

1 VFK71 (150g max.),
2 VFK0133 (1200g max.)
Dial Torque Gauge
3 VFK0134
Dial Torque Gauge Adapter

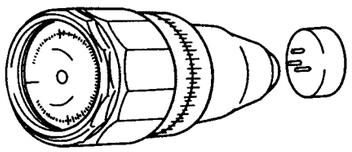

4 VFK0132
Back Tension Meter

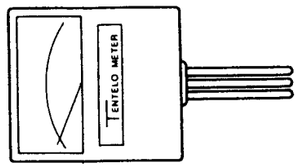

Tentelo Meter
Model: T2-H7-UM (7 ounces, 200 grams)

5 VFK0293
Post Driver (0.9mm)

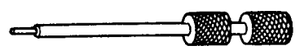

6 VFK0326 (or purchase locally)
Hex. Wrench Set

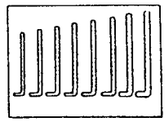

Gosho's
Hex keys No. 505-G
1.27, 1.5, 2.0, 2.5, 3.0

7 VFK0357 (ϕ1.5)
8 VFK0358 (ϕ2)
Eccentric Screwdriver

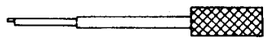

9 VFK0363
Post Height Fixture

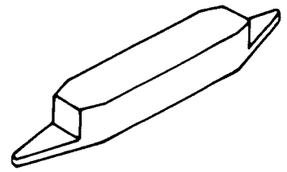

10 VFK0446
Fine Adjustment Screwdriver (3mmϕ)

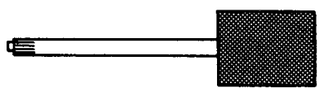

11 VFK0676 (or purchase locally)
Nut Driver (7mm)

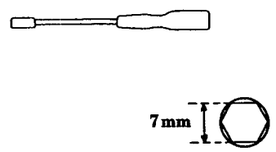

12 VFK0719
Mech Neutral Adjustment Plate

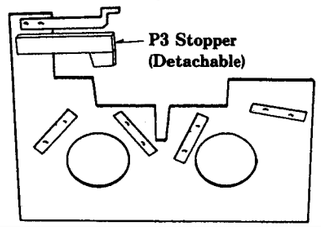

13 VFK0722
Inclined Post Angle Fixture

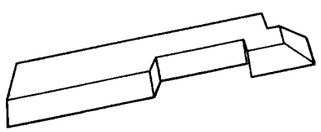

14 VFK0737B
Drum Replacement Tool

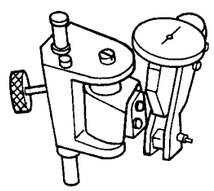

15 VFK0740
Torque Wrench A
16 VFK0741
Adaptor
Screwdriver

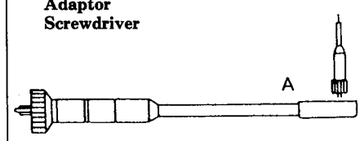

17 VFK0742
Micro Meter Pick-up Fixture
45 VFK1031
Pick-up Head

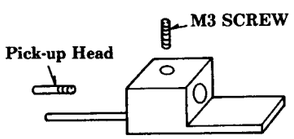

18 VFK0749
Froiral Grease (White)
(for plastic part)

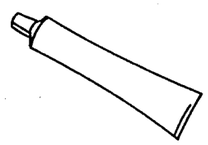

19 MOR265
Morlytone Grease (Black)
(for metal part)

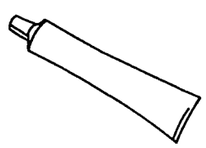

Servicing Fixtures & Tools

20 VFK0753
10th Dubbing Simulation Tool

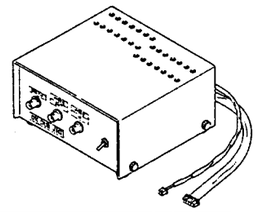

21 VFK66
Fan Type Tension Gauge

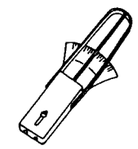

22 VFK0771
Calibration Block

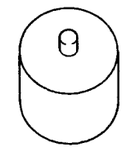

23 VFK0772
Reel Height Adj Tool

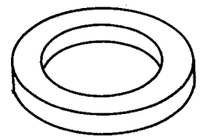

24 VFK0779
Position Change Driver

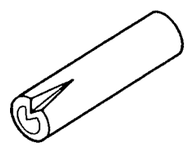

25 VFK0811
Hex Screw

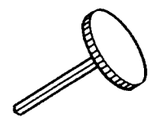

26 VFK0832A
Linearity/Head Height Adjustment Tool

27 VFK0869
Pick Up Unit for VFK0737B

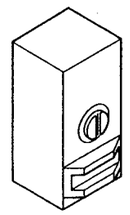

28 VFK0878
Torque Wrench B (Torque Adjustable)

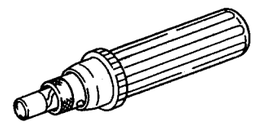

29 VFK0881
Cross Point Adaptor (for VFK0878)

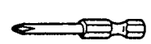

30 VFK0910
Post Shell Driver (1)

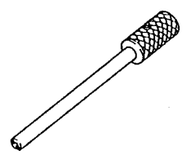

31 VFK0912
Post Axis Driver (3)

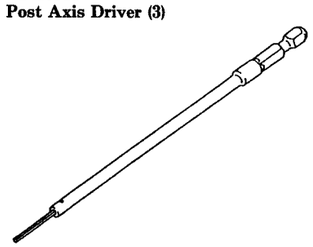

32 VFK0920
Post Axis Driver (4)

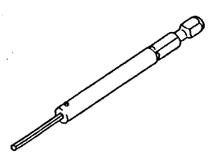

33 VFK0948 (or purchase locally)
Check Light

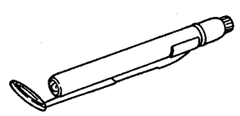

34 VFK0955
Post Shell Driver (2)

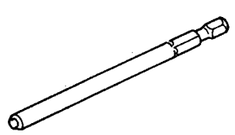

Servicing Fixtures & Tools

35 VFK0956
Hex Head Bit

36 VFM6080EC / VFM6081EC / VFM6086EC } NTSC
37 VFM6180EC / VFM6181EC / VFM6186EC } PAL
Alignment Tape

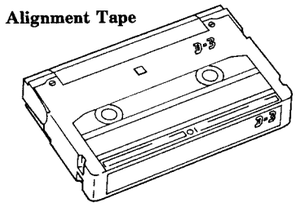

38 DAQ-12 (QUATECH)
(Locally purchase)

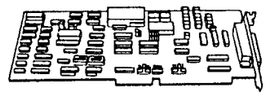

39 VFK0989 (For ELMEC)
VFK0990 (For QUATECH)
Head Height Soft

40 Maker TESA TTA-20
Micro Meter
(This is not Panasonic Tool)

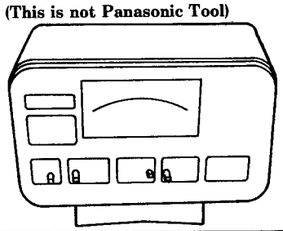

41 Maker TESA GT-22
Micro Meter Pick Up
(This not Panasonic Tool)

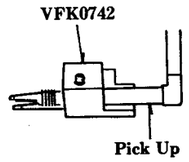

42 VFK1008
A/C Head Tilt Measurement Tool

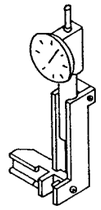

43 VFK1007
Calibration Plate (1)
VFK1006
Calibration Plate (2)

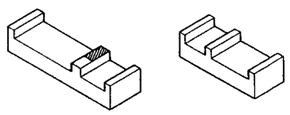

44 VFK1032
Connector Cable for VFK0832A
Head Amp Unit

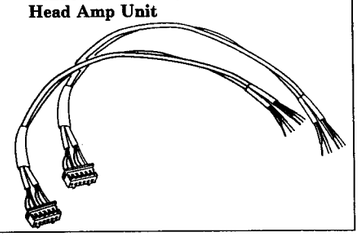

* : Factory Adjustment only

No.	Name	Part No.	Purpose
*1 2 3	Dial Torque Gauge (150 g) Dial Torque Gauge (1200 g) Dial Torque Gauge Adapter	VFK71 VFK0133 VFK0134	1. Loading Back Tension Torque Adjustment Take-up Reel Motor. 2. Take-up Reel Torque Adjustment 3. Supply Reel Torque Adjustment [These adjustment procedures are described in the servo section of electrical adjustment.]
4	Back Tension Meter	VFK0132	Tension Adjustment
5	Post Driver (0.9 mm)	VFK0293	Post height adjustment (P2, P3)
6	Hex. Wrench M2 Hex. Wrench M2.6 Hex. Wrench M3	VFK0326 (Set) VFK0326 (Set) VFK0326 (Set)	Tension Magnet Height Adjustment *1. Inclined Post Inclined Angle Adjustment (1) 2. Tension Adjustment (Fine)
7	Eccentric Screwdriver (ϕ1.5)	VFK0357	Tension adjustment (Coarse)
8	Eccentric Screwdriver (ϕ2)	VFK0358	1. Pinch Solenoid Position Adjustment *2. Inclined Post Inclined Angle Adjustment (2) 3. Drum Cleaner Unit Adjustment 4. Tension Arm Neutral Voltage Adjustment 5. A/C Head X Value Adjustment
*9	Post Height Fixture	VFK0363	*Post Height Pre-Adjustment
10	Fine Adjustment Screwdriver (3 mmϕ)	VFK0446	1. Loading Completion SW Adjustment 2. Unloading Completion SW Adjustment 3. Sub-loading Completion SW Adjustment 4. Sub-unloading Completion SW Adjustment 5. Pinch Press Lever Position Adjustment
11	Box Wrench M4 Nut (7 mm)	VFK0676	A/C Head Height Adjustment
12	Mech Neutral Adjustment Plate	VFK0719	*1. P3 Inclined Angle Adjustment *2. Inclined Post Inclined Angle Adjustment (1) *3. Inclined Post Inclined Angle Adjustment (2) 4. Tension Arm Neutral Voltage Adjustment
*13	Inclined Post Angle Fixture	VFK0722	*Inclined Post Inclined Angle Adjustment (2)
*14	Drum Replacement Tool	VFK0737B	Center Drum adjustment/Linearity Measurement
*15 16	Torque Wrench A Adaptor Screwdriver	VFK0740 VFK0741	Center Drum Replacement Center Drum Replacement
*17	Micro Meter Pick-up Fixture Pick-up Head	VFK0742 VFK1031	*1. P3 Inclined Angle Adjustment *2. Inclined Post Inclined Angle Adjustment (1)
18	Froiral Grease (White)	VFK0749	Grease up for plastic part
19	Morlytone Grease (Black)	MOR265	Grease up for metal part (10 g)
20	10th Dubbing Simulation Tool	VFK0753	Video Level Total Confirmation
21	Fan Type Tension Gauge	VFK66	Pinch Solenoid Position Adjustment
*22	Calibration Block	VFK0771	Micro Meter Calibration
23	Reel Height Adj Tool	VFK0772	Reel Height Adj Tool
24	Position Change Driver	VFK0779	Center Drum Replacement
25	Hex Screw	VFK0811	*Center Drum Replacement
*26	Linearity/Head Height Adjustment Tool	VFK0832A	*1. Tape Linearity and Head Height Fine Adjustment
27	Pick Up Unit for VFK0737B	VFK0869	Pick up unit of VFK0737B for Replacement
*28	Torque Wrench B	VFK0878	A/C Horizontal Position, P1, P4~P12 Post Height Adjustments, Center Drum Replacement
29	Cross Point Adaptor	VFK0881	Adaptor for VFK0878
30	Post Shell Driver (1)	VFK0910	*Post Height Adjustment
31	Post Axis Driver (3)	VFK0912	P1, P4~P12 Post Height Adjustment
32	Post Axis Driver (4)	VFK0920	A/C Horizontal Position Adjustment
33	Check Mirror	VFK0936	Tape Transport Check
34	Post Shell Driver (2)	VFK0955	Post Height Adjustment
35	Hex Head Bit	VFK0956	Upper Drum Fix
36, 37	Alignment Tape	VFM6080EC VFM6081EC	Electrical Adj Tape Head Height Adj Tape
38	A/D Converter (DAQ-12)	Locally Purchase	Linearity and Head Height Adjustment
39	Head Height Soft	VFK0989/VFK0990	Linearity and Head Height Adjustment
*40	Micro Meter	TESA TTA-20	Inclined Post Angle Adjustment
*41	Micro Meter Pick Up	TESA GT-22	Inclined Post Angle Adjustment
*42	A/C Head Tilt Measurement Tool	VFK1008	A/C Head Tilt Measurement
*43	Calibration Plate (1) & (2)	VFK1007/VFK1006	A/C Head Tilt Measurement
*44	Connector Cable for VFK0832A	VFK1032	Head Amp Connector for Spare
*45	Pick-up Head	VFK1031	Pick-up Head for VFK0742

Switzerland	Telephone	Fax
TESA SA Bugnon 38 CH-1020 Renens	021 634 15 51	021 635 75 35
Pierre ROCH S.à r.l. Bugnon 38 CH-1020 Renens	021 634 15 51	021 635 75 35
England		
TESA METROLOGY LTD. Halesfield 8 GB-Telford TF7 4QN	0952 581923	0952 585414
TESA-Reference Standards Division Bradgate Street GB-Leicester LE4 OAW	0533 629012	0533 514762
THOMAS MERCER LTD. Eywood Road GB-St. Albans AL1 2ND	0727 55313	0727 868455
Germany		
LEITZ MEßTECHNIK GmbH Siegmund-Hiepe Straße 2-12 D-6330 Wetzlar	06441 207 0	06441 207122
TESA LEITZ GmbH Netzestraße 32 D-7140 Ludwigsburg	07141 87 470	7141 874 788
France		
TESA FRANCE 27-29 av. Ph.-Auguste F-75540 Paris	1 44 93 10 00	1 43 71 74 79
TESA FRANCE 21 av. de-Lattre-de-Tassigny F-94134 Fontenay-sous-Bois	1 45 14 66 00	1 45 14 66 11
Italy		
TESA ITALIA S.r.l. Via Spartaco 30/34 1-20135 Milano	02 5519 36 32	02 5501 22 33
Japan		
TESA SEIMITSU CO. LTD. 23-1, 2 Chome, Shiba Minatoku Tokyo-Japan	03 3769 1421	03 3769 3909
USA		
BROWN & SHARPE MANUFACTURING CO. 200 Frenchtown Road North Kingstown RI 02852-USA	401 886 2000	401 886 2762
TESA MEASUREMENT SYSTEMS 22530 Heslip Drive Novi MI 48375-USA	313 347 5900	313 347 5906
STANDARD GAGE CO. INC. 70 Parker Ave Poughkeepsie NY 12602-USA	914 471 3100	914 471 3143

IMPORTANT NOTICE

1. VFK0763 Torque Wrench

Upper Drum torque value of AJ-D350 has been changed from 6kg to 8kg. Therefore please use VFK0878 (Variable torque Driver) instead of VFK0763.

2. VFK0758 Fan Type Tension Gauge

VFK0758 and VFK66, these are almost the same. VFK0758 has changed the point of the tension gauge for small space. D3 VTRs have enough space. Therefore please use the VFK66 instead of VFK0758.

3. New post drivers (VFK0910, 0912, 0920, 0955)

New posts P1 to P12 and A/C Horizontal position's screws have been changed in later models. New fixing screws are added to improve tape path linearity. Old type posts had no specified screw torque control.
With the new type of posts the torque is adjusted using a torque driver. Torque value is tightened to 2.5kg for P1 to P12 by VFK0910, VFK0912 and VFK0955. A/C Horizontal position torque value is to 5kg by VFK0920.

4. New A/D Converter (DAQ-12)

A/D converter has been changed to a new type manufactured by QUATECH'S. VFK0853 is discontinued. The new A/D converter can be purchased locally, Please refer to the international distributors as follows.

QUATECH

662 Wolf Ledges Pkwy. • Akron, OH 44311
Telephone: (216) 434-3154
Fax: (216) 434-1409

AUSTRALIA

INTERWORLD ELECTRONICS & COMPUTER
1G Eskay Road
Oakleigh South
Victoria 3167
AUSTRALIA
Telephone: (03) 563-7066
Fax: (03) 563-7337
Toll Free: 008-335103

CANADA

INTERWORLD VCR
1415 Welch st.
North Vancouver, B.C.
CANADA V7P 1B5
Telephone: 604-984-4171
Telex: 04-352875
Fax: 604-984-8357
Toll- Free: 1-800-663-6001
TORONTO OFFICE
Telephone: 416-513-7027

ENGLAND

DIAMOND POINT INTERNATIONAL
9 North Point Business Estate
Enterprise Close
Medway City Estate
Rochester upon Medway
Kent ME2 4L4
ENGLAND
Telephone: 634-722-390
Fax: 634-722-398

FRANCE

ELEXO
BP 24-91371
Verrieres-Le-Buisson
Cedex
FRANCE
Telephone: 33-1-69302880
Telex: 600 517 F
Fax: 33-1-69306851

FINLAND

LAB HI-TECH OY
Kaantopiiri 2B
02210 Espoo
FINLAND
Telephone: +358-0-804-2522
Fax: +358-0-803-9741

GERMANY

JUPITER ELECTRONIC SYSTEMS GMBH
Eichenweg 24
D-6454 Bruchkobel
GERMANY
Telephone: 06181/75041
Fax: 06181/79721

ISRAEL

RCM Ltd.
31 Habarzel St.
P.O. Box 39844
Tel-Aviv
ISRAEL
Telephone: 972-03-5447885
Fax: 972-03-5447290

ITALY

N.C.S. COMPUTER ITALIA
21013 Gallarate
Via Pegoraro, 2
Varese
ITALY
Telephone: 0331/770016
Fax: 0331/772000

KOREA

RM. 401
Namkog BLDG, 897-13
Daichi-Dong, Kangnam-Ku
Seoul, KOREA
Tel: 82-2-538-4001
Fax: 82-2-538-4069

NETHERLANDS

ACAL AURIEMA
doornakkersweg 26
5642 MP eindhoven
NETHERLANDS
Telephone: 040-816565
Fax: 040-811815

SINGAPORE

Bliss Services Pte Ltd
1 Rochor Canal Road
#05-04 Sim Lim Square
SINGAPORE 0718
Tel: (65) 338-1300
Fax: (65) 338-1900

SPAIN

SANTA Barbara SA
Vergos, 55bls, local 3 Bajos
08017 Barcelona
SPAIN
Tel: 34-3-203-9916
Fax: 34-3-203-9950

2. DISASSEMBLY PROCEDURES

2-1. TOP PANEL REMOVAL

1. Remove power cord from unit before disassembly.
2. Unscrew the 4 screws (A) and remove the 3 Top Panels.

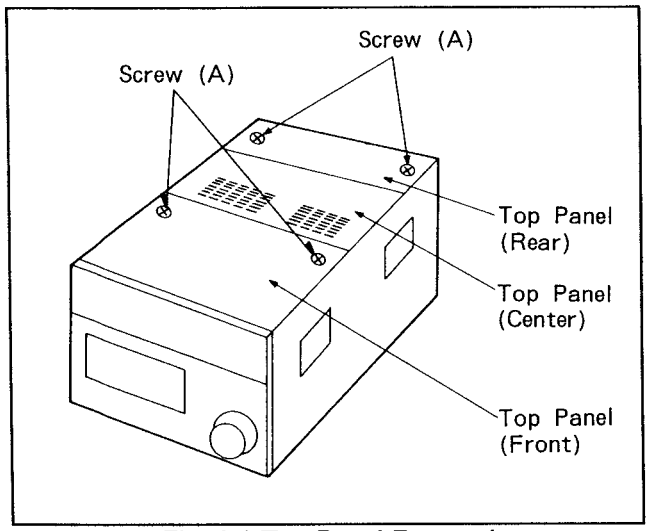

Fig. 1-1 Top Panel Removal

2-2. BOTTOM PANEL REMOVAL

1. Unscrew the 5 screws (B) and remove the Bottom Panel.

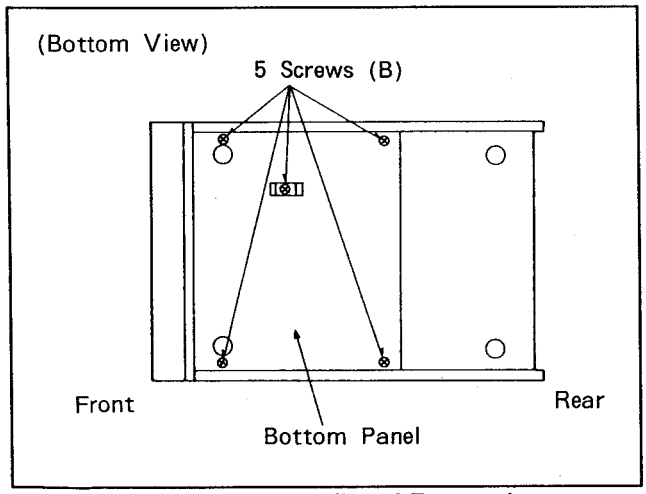

Fig. 1-2 Bottom Panel Removal

2-3. FRONT LOADING (CARRIAGE UNIT) REMOVAL

1. Remove the Top Panel.
2. Remove 5 screws (D) and 2 hinges (E), then turn up the Rec Amp P.C.Board, and remove the carriage Fix Plate (F) and (R) as shown in Figure 1-3-2.

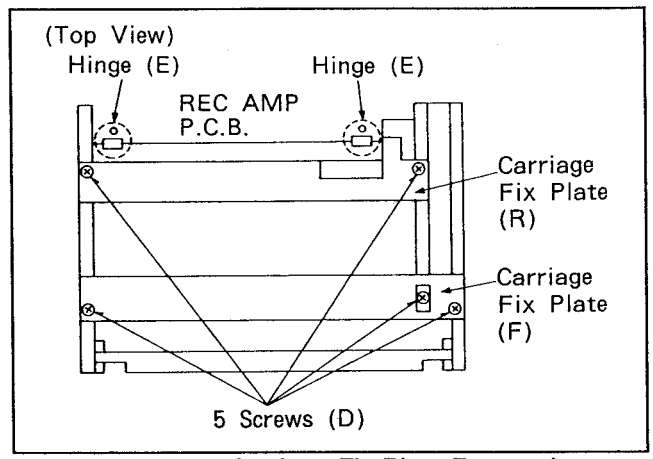

Fig. 1-3-2 Carriage Fix Plate Removal

3. Disconnect the connector P709 and unscrew the 4 screws (G), then lift the Front Loading (carriage) Unit up to remove as shown in Figure 1-3-3.

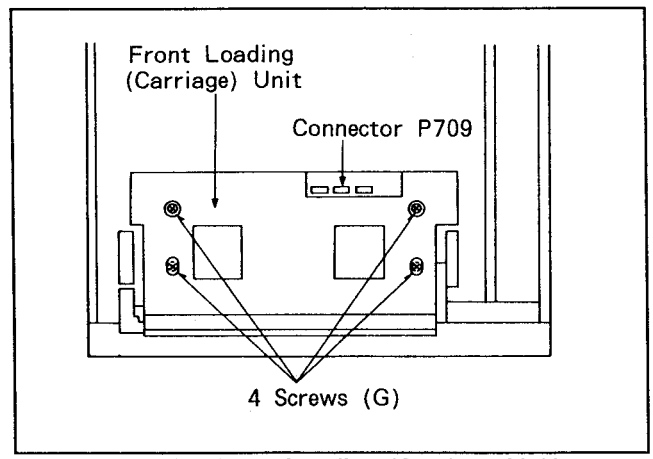

Fig. 1-3-3 Front Loading (Carriage Unit) Removal

2-4. L1, L2, L3, L4 P.C.BOARD AND SHIELD PLATE REMOVAL

1. Remove the Bottom Panel, refer to item 1-2.
2. Open the Control Panel.
3. Pull out the L1, L2, L3, L4 P.C.Boards and Shield Plate as shown in Figure 1-4-1.

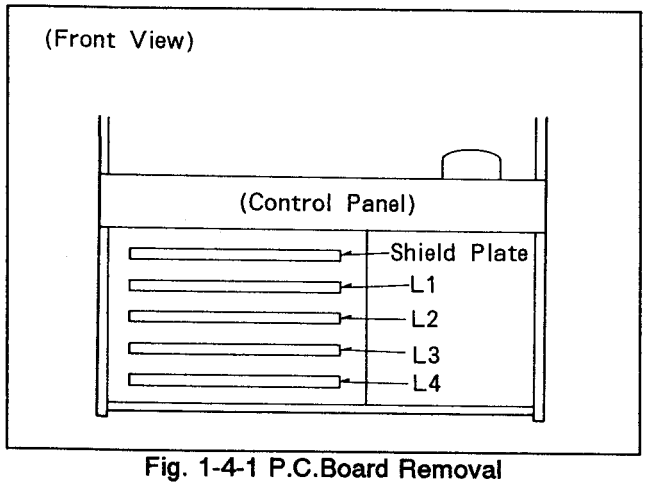

Fig. 1-4-1 P.C.Board Removal

2-5. POWER BOX REMOVAL

1. Unscrew the 2 screws (A) and remove the bottom plate cover as shown below.

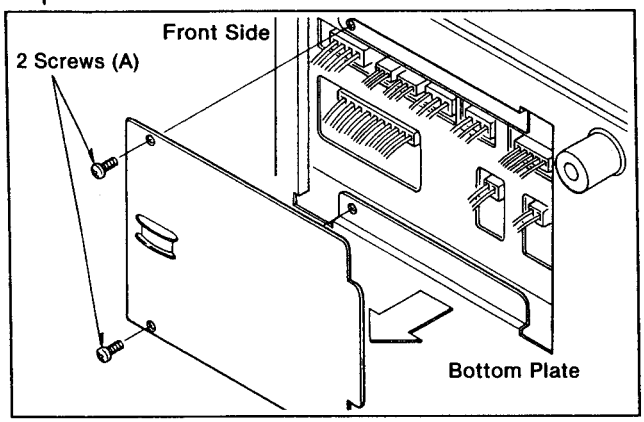

2. Disconnect the 9 connectors in the power box as shown below.

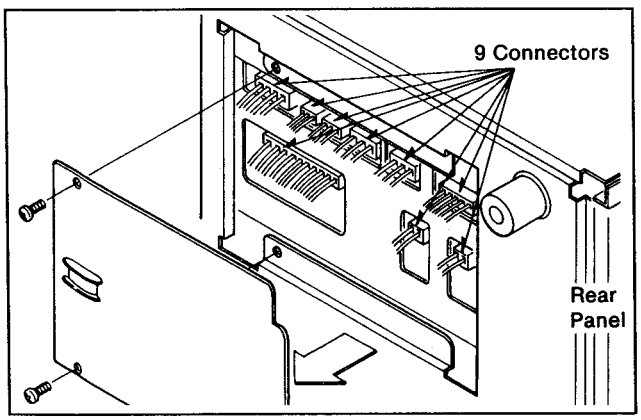

3. Remove the top panel. (Refer to item 2-1)
4. Unscrew the 5 screws (B) and remove the power unit angle.
5. Unscrew the 4 screws (C) and turn open the rear panel as shown below.
6. Unscrew the 4 screws (D) and remove the top cover angle.

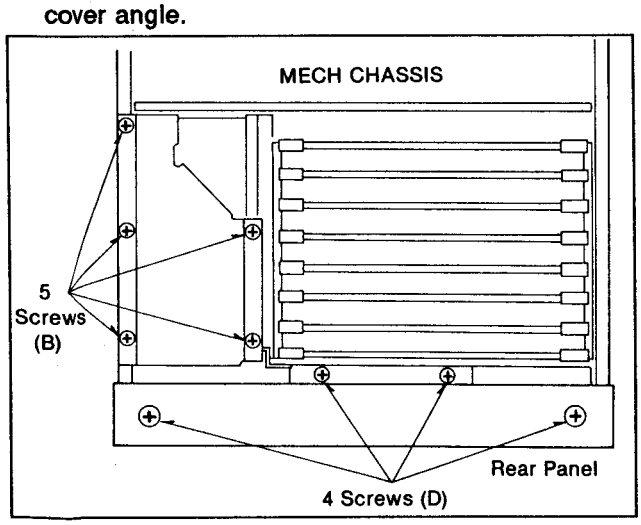

7. Remove the binder on the AUDIO IN/OUT P.C.Board from connector as shown below.

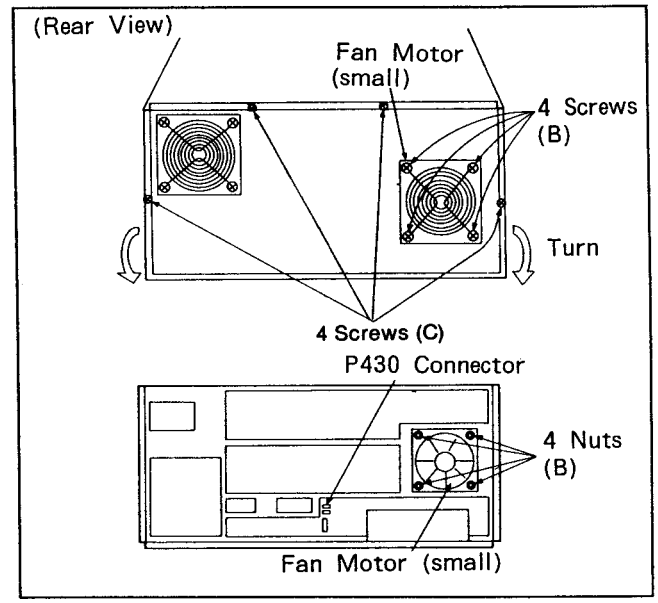

8. Unscrew a screw (E) and full out the power box from rear panel as shown below.

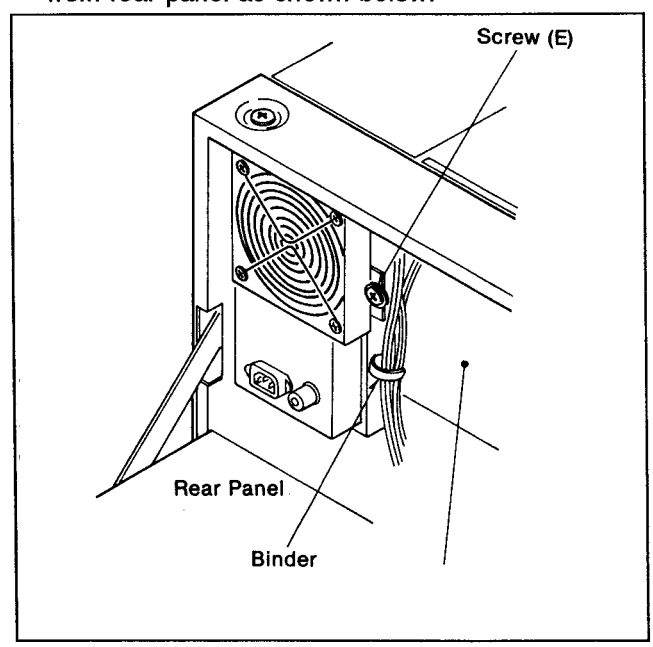

3. AJ-D350 MANUAL TAPE EJECT

If the cassette tape cannot be ejected due to power failure, manual eject can be carried out as follows.

1. Remove the front panel.
2. Open the REC AMP board by gently pulling the tow plastic retaining clips.
3. Gently rotate the loading motor clockwise to unload the threading mechanism. Do not allow the tape to become too loose.
4. Insert a screw driver into hole A (S and L cassettes) or A' (XL cassettes) and knock the take-up reel manual drive lever continuously to take up the slack tape.
5. Repeat operations 3 and 4 until the tape is off from the drum.
6. Insert a flat blade screwdriver to A portion into hole B and gently rotate the pulley clockwise (manual sub-unloading).
7. Insert a screwdriver into hole A (S and L cassettes) or A' (XL cassettes), and knock the take-up reel manual drive lever continuously to take up the slack tape.
8. Repeat item 6 and 7 until tape is completely taken up into the cassette.
9. Insert a flat blade screwdriver into the hole C and rotate counter-clockwise until the tape is ejected.

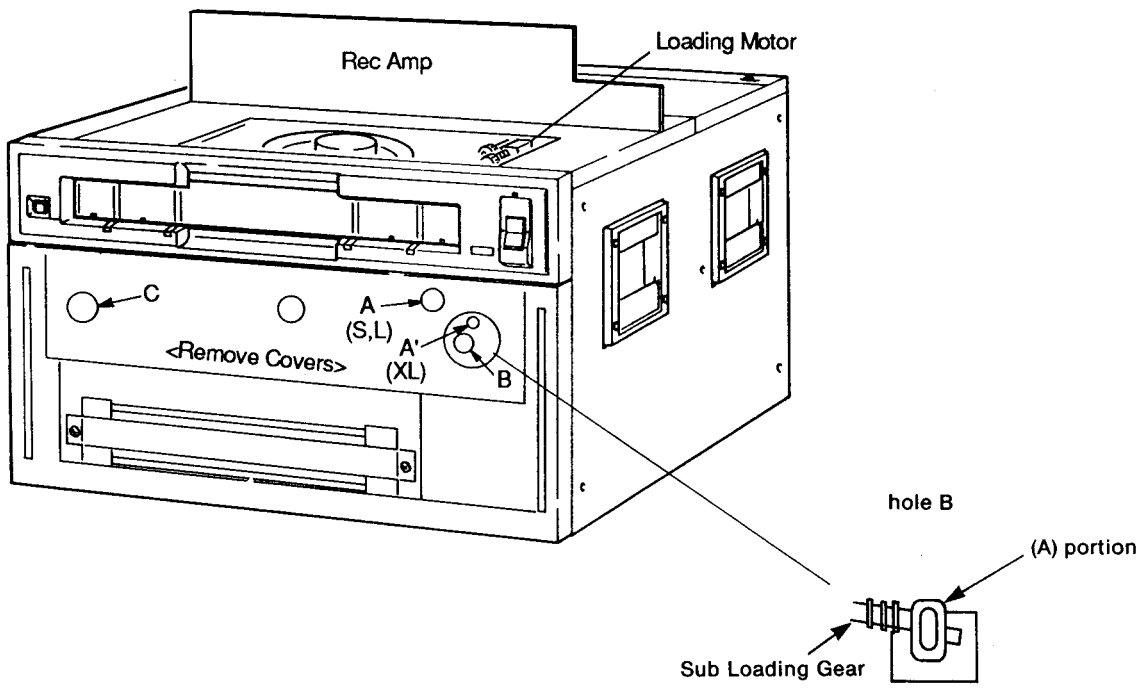

4. RECOMMENDED CLEANING AND CONFIRMATION PROCEDURE

Frequent cleaning and maintenance, as listed this section, will assure optimum performance and longer life of your AJ-D350.
Maintenance parts replacement is described in Maintenance procedure section.

Please refer to the table of contents for your particular application.

1. Required Material
2. Recommended Schedule
3. Head Cleaning
4. Pinch roller, capstan, post guides
5. Brush Assemblies
6. Brakes & Reel table
7. Cleaning Machines table
8. Lubrication

CLEANING MAINTENANCE PROCEDURES

4-1. MATERIALS REQUIRED

1. Head cleaning fluid (lifting solvent)
2. Lint-free head cleaning cloth
3. Canned air
4. Molyton grease (Panasonic part number : MOR265 and VFK0749)
5. Head inspection mirror

4-2. RECOMMENDED SCHEDULE

The following list is a recommented cleaning and checking schedule. The frequency of maintenance depends on the actual use and operating environment and should be modified accordingly.

1. Daily: - Cleaning of Upper and center Drum & A/C Head Assembly.
2. Weekly: - Cleaning of Tape path Upper and Center and Lower Drum, A/C Head, Full Erase Head, Tape Post Guides, Pinch Roller, Capstan.
3. Monthly: - Cleaning of Reel Base, Cassette Assembly.
4. 1000 hours or 3 months
   Check the tape tension and brake torque.
5. 2000 hours or 6 months
   Lubricate gears and mechanical parts.
6. 4000 hours or 1 year
   Clean out machine with canned air.

4-3. CLEANING PROCEDURES

Note: All procedures should be performed with AC power OFF.

(1) Video Head Cleaning Method: (Daily)

Clean heads by applying even pressure and rotating center drum a few turns (as shown). Never wipe in an up and down motion.

1. Clean with cleaning liquid
2. Wipe dry Clean heads until the cleaning cloth does not show any sighs of dirt.
3. Check that no thread from the cleaning cloth remain on the heads.

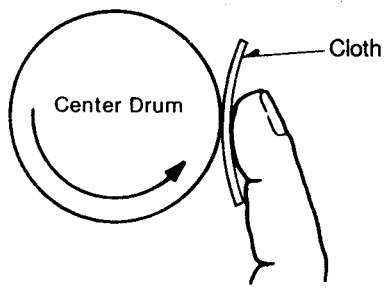

TAPE PATH CLEANING METHOD: (WEEKLY)

(2) Lower Drum Cleaning Method: (Weekly)

Clean the rabbet guide with a sharpened toothpick. Check that no threads from the cleaning cloth remain on the heads. Use an inspection mirror to check for any scratches or signs of wear on the drum assembly.

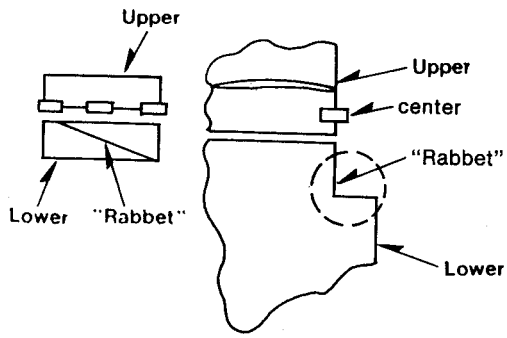

(3) A/C Head and Full Erase Head Cleaning Method: (Weekly)

Clean the A/C head and Full erase head with cleaning fluid then wipe dry.

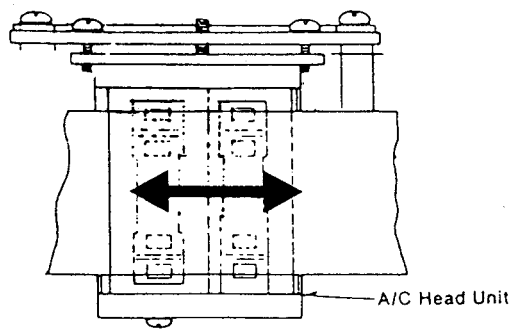

(4) Pinch Roller, Capstan Post Roller Cleaning Method: (Weekly)

The pinch roller should be cleaned with a lint-free cloth and cleaning fluid.
Rotate the roller and clean its entire surface using an up and down motion until the cleaning cloth does not show any signs of dirt. The capstan and post roller should be cleaned in the same manner. In the case of the post roller, only a little cleaning fluid should be used to avoid damaging the ball-bearing.

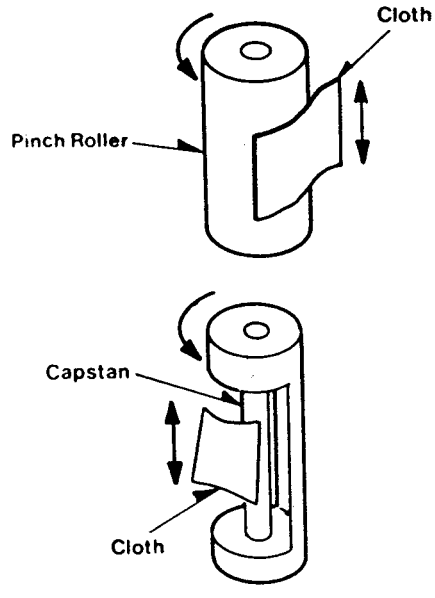

(5) Post Guides Cleaning Method: (Weekly)

Post guides P1-P12 should be pushed down to create a gap at the top of the guide.

Note: Cleaning should ONLY be performed using a dry cloth to prevent damage to the ballbearing.

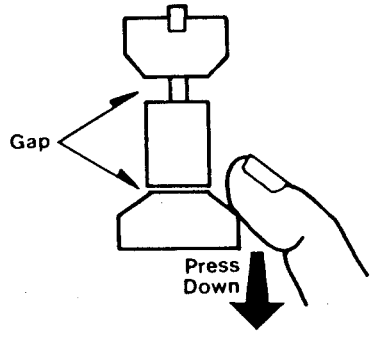

(6) Fixed Post Cleaning Method: (Weekly)

Fixed posts should be cleaned with cleaning fluid in the direction of tape travel. At the same time, check for any wear at the point where the edge of the tape makes contact.

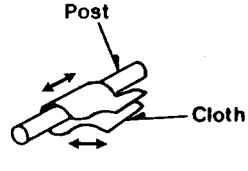

(7) A/C Head Cleaner Pad Cleaning Method: (Weekly)

Rotated the cleaner pad so that the clean position (white portion) can touch the A/C Head by hand as shown in Figure.

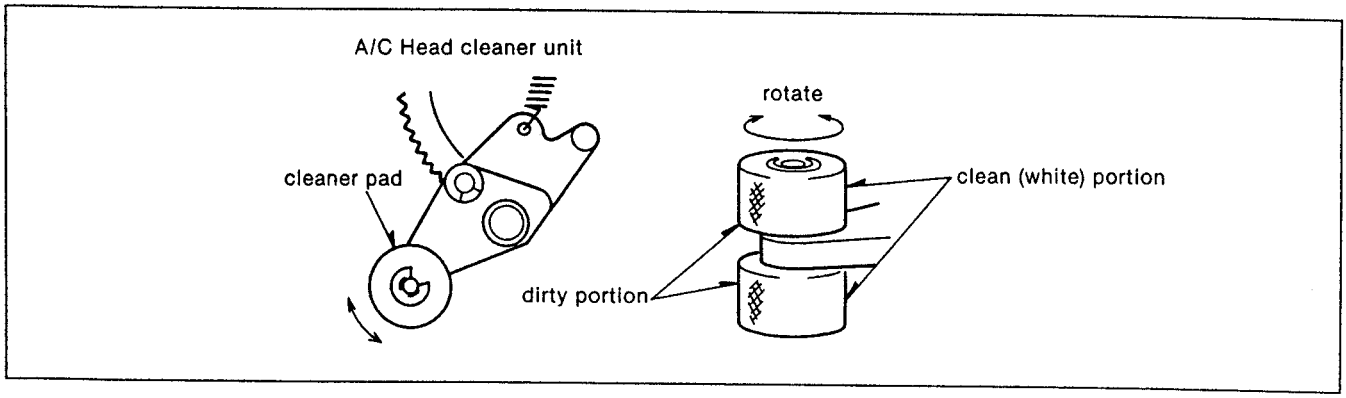

(8) Reel Table Cleaning Method: (Monthly)

The reel table brake contact surface should be rotated and the whole surface cleaned with cleaning fluid and wiped dry.

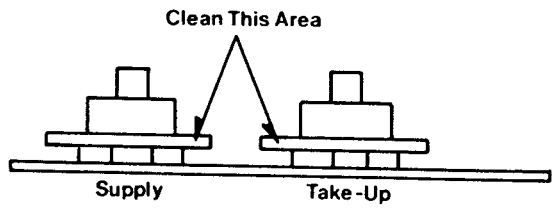

(9) Cassette Assembly Cleaning Method: (Monthly)

Any dust in the cassette assembly should be vacuumed out and the assembly wiped clean with a dry, lint-free cloth. Check the LED's and tape end sensors.

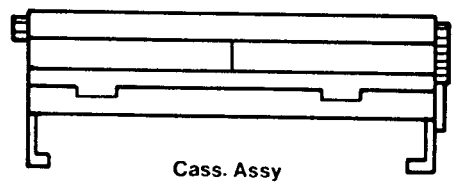

(10) CLEANING OF THE MACHINE'S INTERIOR (Yearly)

1) MECHANICAL SECTION
Remove the front loading mechanism and cover the drum assembly to prevent dust from contaminating the video heads, then blown out any dust from the chassis and front-loading mechanism with an air-gun.

Note:
Ensure that dust is blown out of the machine and NOT back inside it.

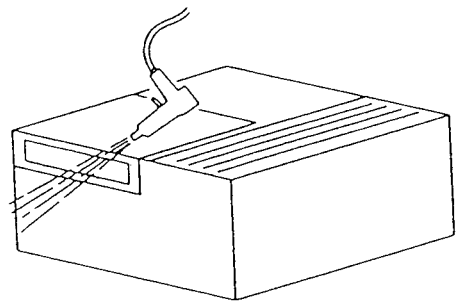

2) ELECTRICAL SECTION

Below the dust from the gaps between the printed-circuit boards with the air-gun. Remove the bottom plate from the machine and blow the dust from around the mother board and the fan motor unit. Clean edge connectors with connector contact cleaner.

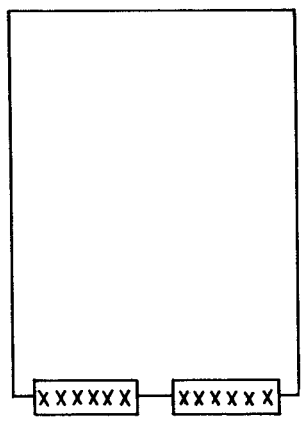

Bottom of Mechanical

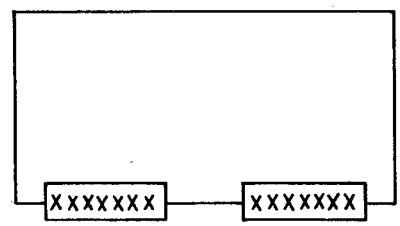

Behind of Mechanical

4-4. LUBRICATION OF THE GEARS AND SLIDING SURFACES (EVERY 2000 HOURS OR EVERY 6 MONTHS OF OPERATION)

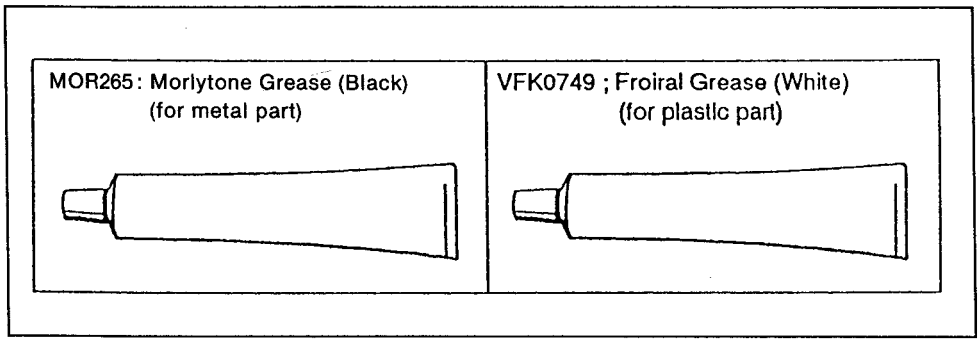

A. Grease Up Procedures

1. Turns power off.
2. Remove the cassette compartment.
3. Confirm the mechanism is unloading condition.
4. Confirm the grease of main mechanism parts, if any dust are sticked, clean them.
5. Grease the plastic part with Froiral Grease, part number VFK0749 (Panasonic order number), and metal part with Mortion Grease MOR265. The parts positions are described following step B.
6. Set the mechanism to loading completion condition.
   (1) Rotate sub-loading motor CCW until sub-loading completion.
   (2) Push down the Loading Ring Connection Gear and Keep it, and rotate Loading Ring Gear CCW by hand until loading completion Gear.
7. Repeat item 4 and 5.
8. Set the mechanism unloading completion by reverse way of item 6.

B. Mechanism Parts

Grease up the following parts if they are dried.

(1) xxxxx Part : Morlytone Grease MOR265.
 [A] Main Lod Ditch 3 portions
(2) ♦♦♦♦♦ Part : Froiral Grease VFK0749 (or Froiral G-31SB)
 [B] Reel Base Drive Gear (Left Side)
 Reel Base Drive Wheel (Gear Part)
 [C] Reel Base Drive Gear (Right Side)
 Reel Base Drive Wheel (Gear Part)
 [D] Sub-Loading Worm Gear
 [E] Sub-Loading Gear
 [F] Sub-Loading Drive Gear
 [G] Main Loading Worm Gear
 [H] Main Loading Connection Gear
 [I] Loading Ring Drive Gear
 [J] Loading Ring Connection Gear
 [K] Loading Ring Connection Cam Gear

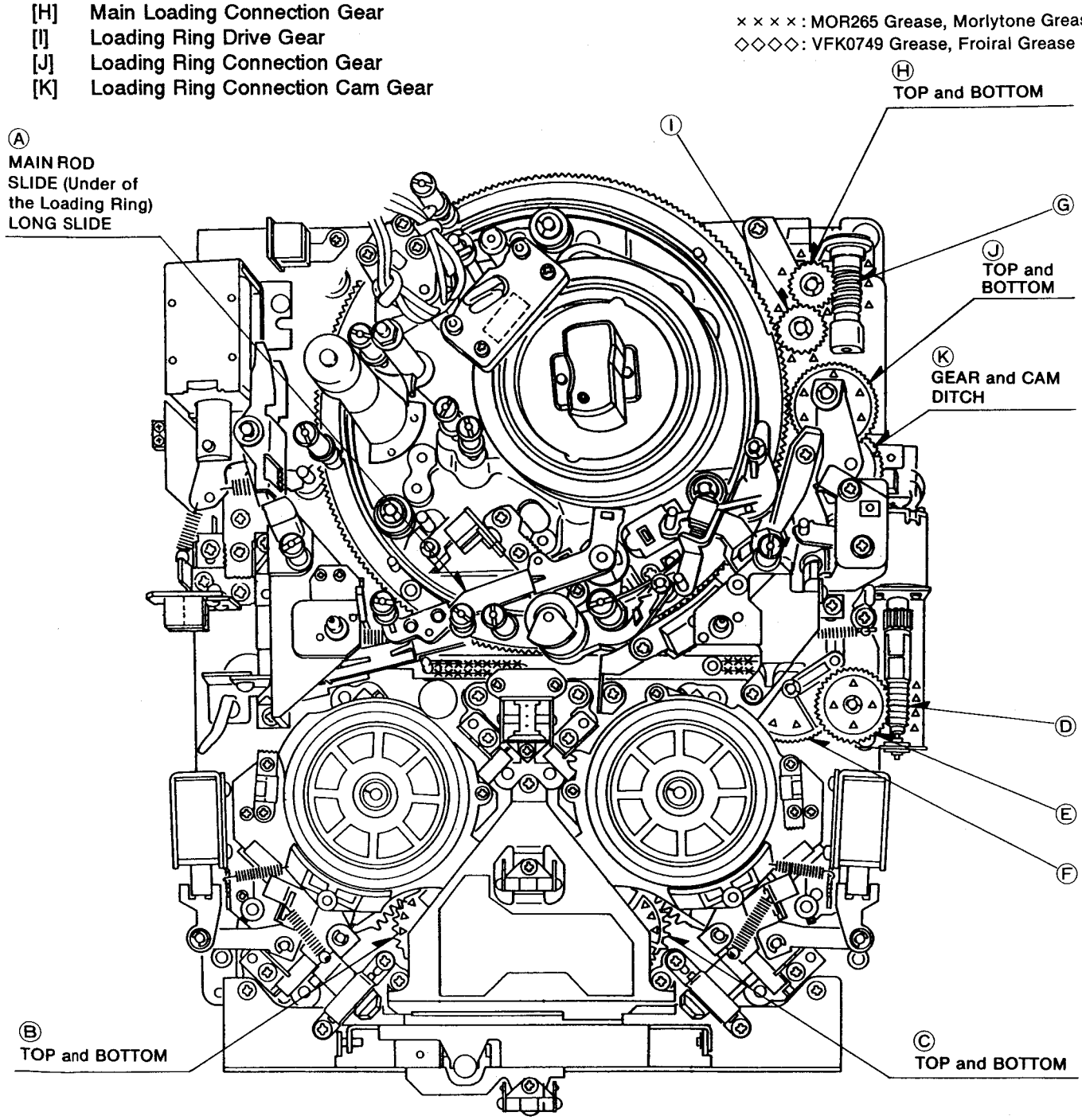

C. Cassette Compartment

(1) Clean the any dust of cassette compartment and grease up portion.
(2) Grease up if the following parts (3) are dried.
(3) Cassette Compartment Parts
Grease up the following parts with Froiral Grase (Panasonic Part number VFK0749).

<Cassette Compartment Unit>
[A] Wiper Arm (Right)
[B] Wiper Arm (Left)
[C] Main shaft Gear (Right and Left)
[D] Wiper Gear
[E] Slide 1
[F] Slide 2

<Front Loading Motor>
[G] Connection Gear 1
[H] Connection Gear 2
[I] Worm Wheel
[J] Worm Gear

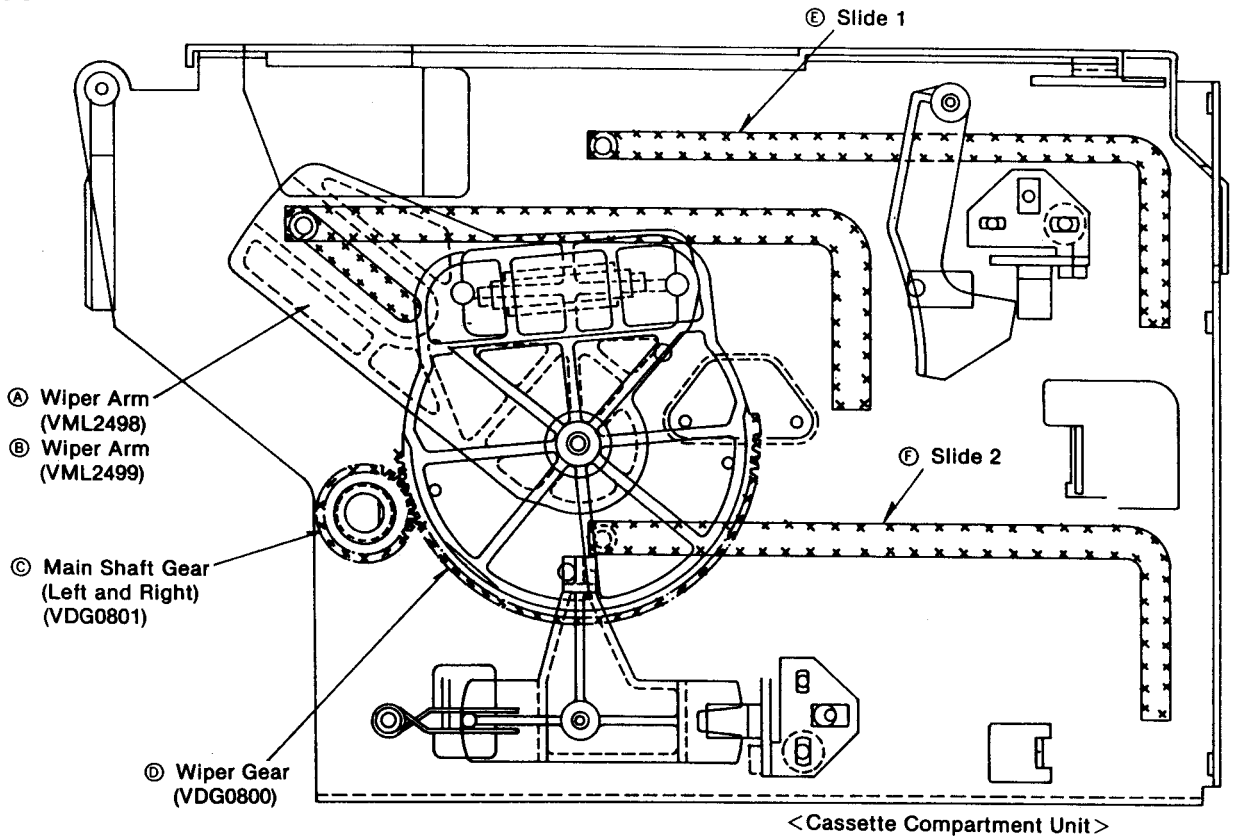

<Cassette Compartment Unit>

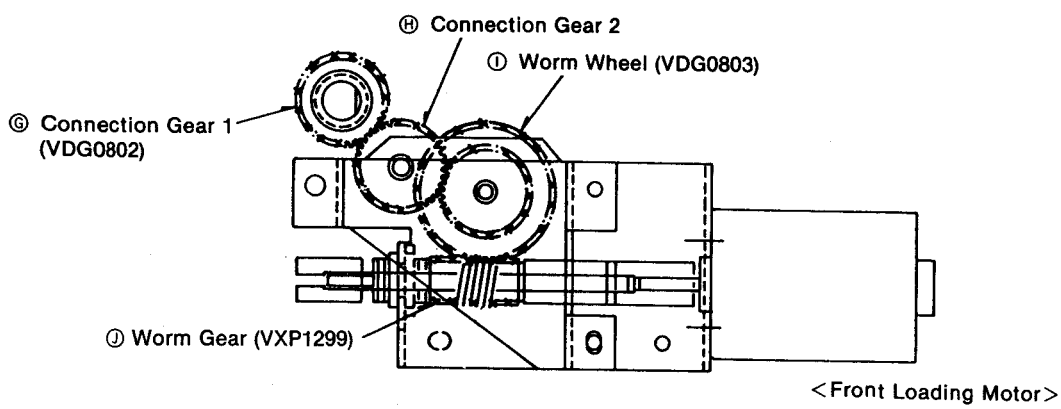

<Front Loading Motor>

5. MAIN MECHANISM ADJUSTMENT PROCEDURES

5-1. TAPE TRANSPORTATION POSTS NAME

There are 12 Posts Roller with bearing P1 through P12, one fixed Inclined post, and A/C Head.
P1 through P12 posts need height adjustment.
P3 post needs height adjustment, tension adjustment and inclined angle adjustment.
the inclined angle of P3 post is adjusted in the factory, so the adjustment needs for factory only.
Inclined post needs factory inclined angle adjustment, because the post is not maintenance part, so do not adjust in the field.
A/C head needs tilt adjustment, height adjustment, azimuth adjustment and X value adjustment.
The tilt angle of the A/C head influences the exit portion of RF envelope linearity adjustment.

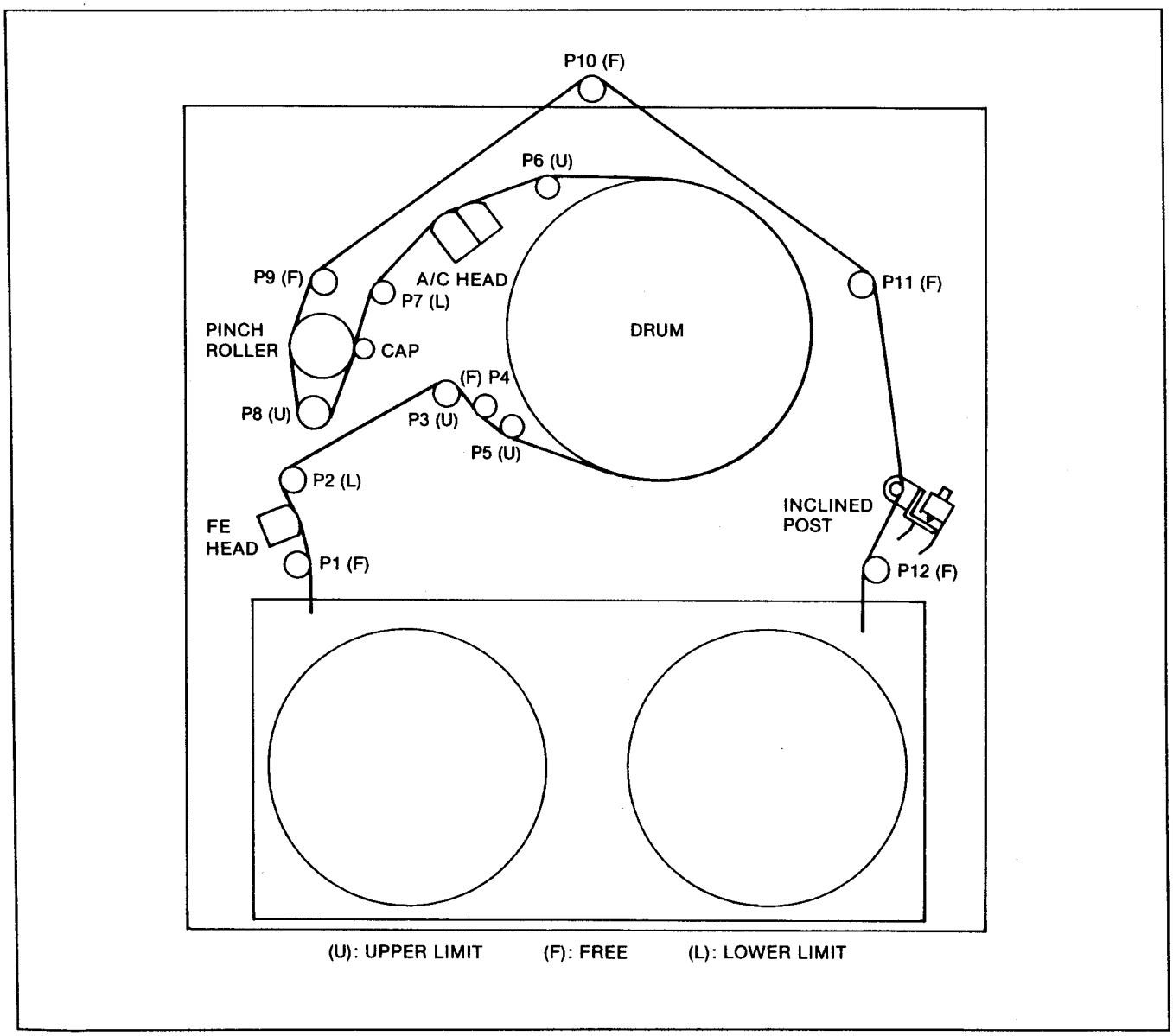

5-2. Tentelo Meter Calibration

Specification : 1 ounce
2 ounce scale compensation Mode
: D3 Tape Pull up
Tape speed 83.880mm/sec

<STEP 1>
1. Connect the one ounce calibration weight to the D3 tape (about 30cm).
2. Set the above tape with the Tentelo meter as shown below.
3. Pull up the tape as same as tape transportation speed, 83.880mm/sec.
4. Adjust the Tentelo meter so that the meter shows just one ounce.

<STEP 2>
1. Connect the Two ounce calibration weight to the D3 tape (about 30cm).
2. Set the above tape with the Tentelo meter as shown below.
3. Pull up the tape as same as tape transportation speed, 83.880mm/sec.
4. Compensates the reading value according with compensation table.

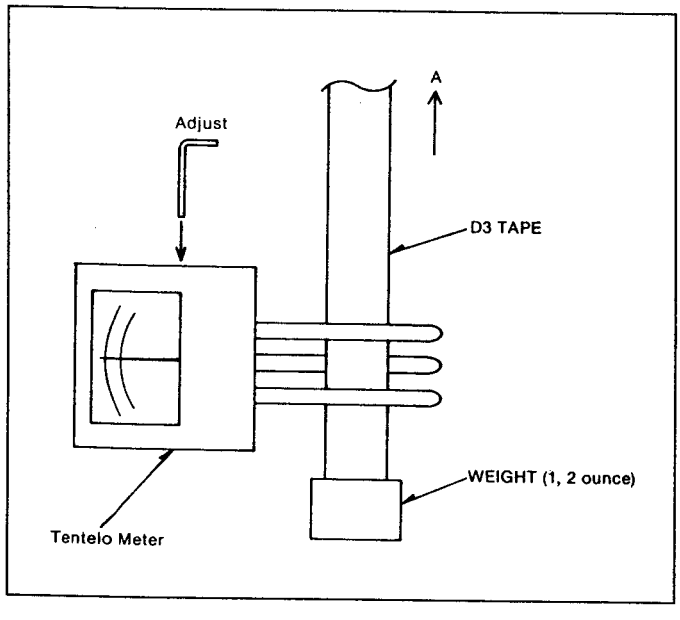

2oz. Indication	Tension specification 23±2		
	21	23	25
47	23.572	24.884	26.197
48	23.313	24.696	26.079
49	23.053	24.507	25.961
50	22.794	24.318	25.842
51	22.535	24.130	25.724
52	22.276	23.941	25.606
53	20.016	23.752	25.488
54	21.757	23.563	25.370
55	21.498	23.375	25.252
56	21.239	23.186	25.134
57	20.979	22.997	25.015
58	20.720	22.809	24.897
59	20.461	22.620	24.779
60	20.202	22.431	24.661
61	19.942	22.243	24.543
62	19.683	22.054	24.425
63	19.424	21.865	24.306
64	19.165	21.676	24.188
65	18.905	21.488	24.070
66	18.646	21.299	23.952
67	18.387	21.110	23.834

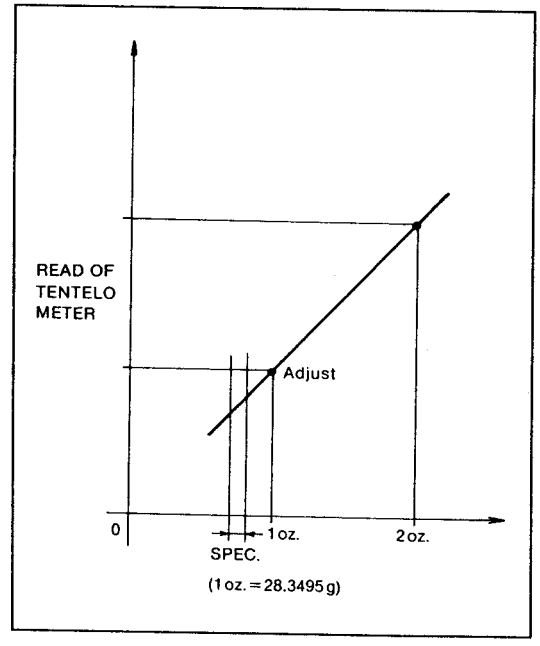

5-3. SENSOR AMP OFFSET ADJUSTMENT (S5 : SERVO)

SPEC	2.5V ± 0.1V DC
TEST	TP2201 [G4]
MODE	EJECT
TAPE	
M.EQ	DIGITAL VOLT METER
INPUT	
ADJ.	VR (on the Tension I/F P.C.B.)

<**STEP 1**>
1. DIGITAL VOLT METER : TP2201
2. Adjustment VR on the Tension I/F P.C.B. so that the DC voltage is 2.5V ± 0.1V DC.

SPECIFICATION = 2.5V ± 0.1V DC

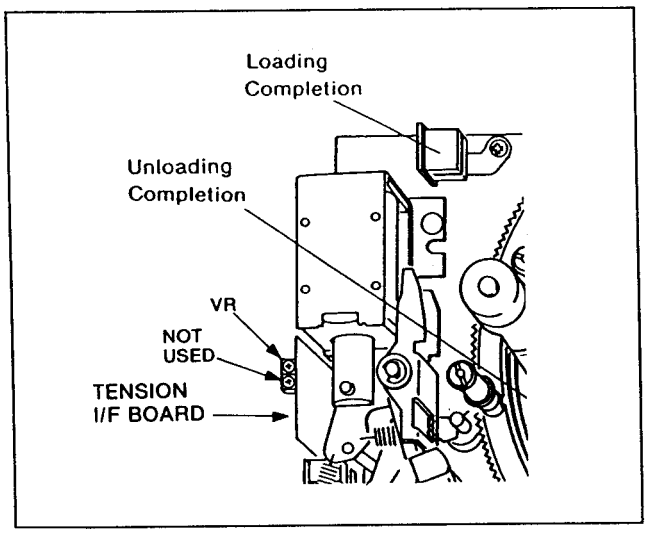

5-4. SUPPLY SENSOR TENSION ADJUSTMENT

(1) Tension neutral voltage adjustment

SPEC	Sensor Output 2.5V ± 0.05V
TEST	TP2001 [G4] on S5 board
MODE	Loading Completion
ADJ.	Tension Sensor unit
TOOL	Mech Neutral Adjustment Plate (VFK0719)
	Eccentric Screwdriver (ø2) (VFK0358)

FIELD ADJUSTMENT

<STEP 1>
1. Turns power off.
2. Remove the cassette compart-ment with the connector as shown in item 2-3.
3. Turns power on.
4. Insert a M cassette into the cassette compartment for an instant. (for size delect).
5. Rotate sub-loading motor to counterclockwise manually until sub-loading completion.

<STEP 2>
1. Remove the P3 stopper from the Mech Neutral Adjustment Plate.

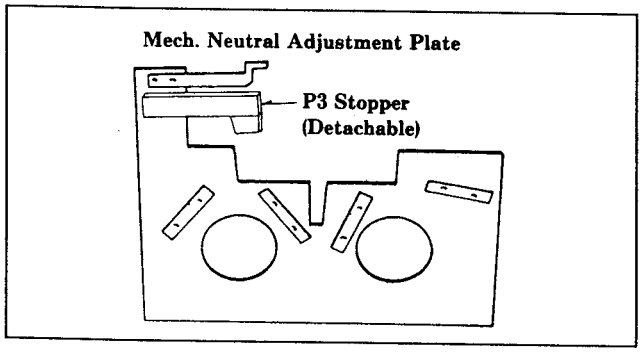

2. Set the Mech Neutral Adjust-ment Plate on the reel table correctly.
   Be careful any mechanism will not be damaged.

<STEP 3>
1. Confirm again the P3 stopper is removed from the plate.

<STEP 4>
1. Connect the scope to the sensor output.
2. Confirm that the sensor output of TP2201 is 2.5V ± 0.05V.
3. If it is not loosen two screws "a", and adjust Tension sensor unit position by a Eccentric screw driver (ϕ2mm) at hole "b".

<STEP 5>
1. The tension sensor is moved "c" direction.
2. SPECIFICATION = 2.5V ± 0.05V
3. Tighten two screws "a".
4. Return the cassette compart-ment to the original position.

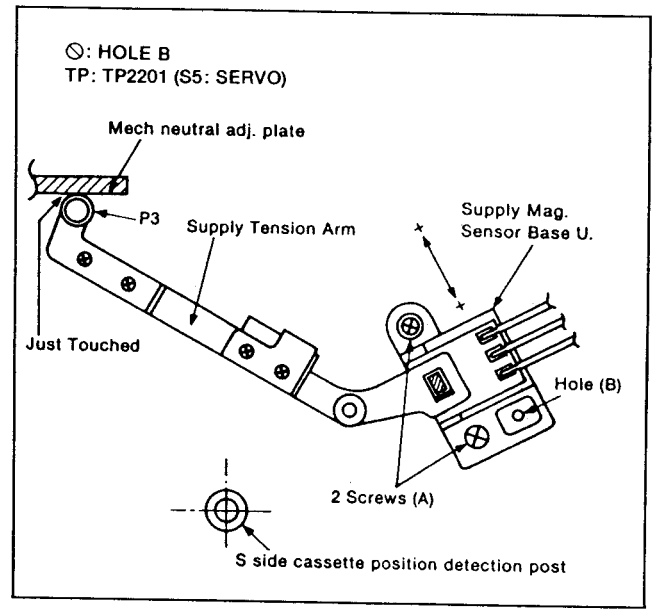

FACTORY ADJUSTMENT

<STEP 1>
1. Turns power off.
2. Remove the cassette compart-ment.
3. Turns power on.
4. Set the VTR into Mech Test modeas shown below.

TEST → MECH → NO TAPE

M CASSETTE

5. Remove the P3 Stopper from the Mech Neutral Plate on the Reel Table.
6. Press STOP key to set the loading completion mode.

<STEP 2>
1. Make sure that the P3 post touches the arm of the Mechanical Neutral Plate as shown in Figure.
2. Confirm that the voltage at TP2201 is 2.5V ± 0.001V.
3. If it is not, loosen 2 screws (A) and insert the eccentric screwdriver into hole (B).
4. Adjust the position of the Supply Magnet Sensor Base Unit until the voltage at TP2201 is in specification.

SPECIFICATION : 2.5V ± 0.015V

5. Tighten the 2 screws (A) and make sure the voltage at TP2201 does not change.

<STEP 3>
1. Place the unit in the PLAYBACK mode.
2. Confirm that the voltage at TP2201 (Vs) ± 0.002V.
3. If it is not, adjust the Supply Magnet sensor Base Unit, follow the procedure in <STEP 3>.

5-5. TAKE UP REEL TORQUE ADJUSTMENT (S5:SERVO)

SPEC.	T REEL TORQUE = 53gr.cm ± 5gr.cm
TEST	TAKE UP REEL
MODE	TAPE LOADING COMPLETION WITHOUT CASSETTE TEST MECH, NO FRLD
TAPE	SELF-RECORDING TAPE
M.EQ	DIAL TORQUE GAUGE (150g max.) -VFK71 DIAL TORQUE GAUGE ADAPTOR -VFK0134 TENTELO METER -VFK0132
INPUT	
ADJ.	FRONT PANEL ADJUSTMENT VR

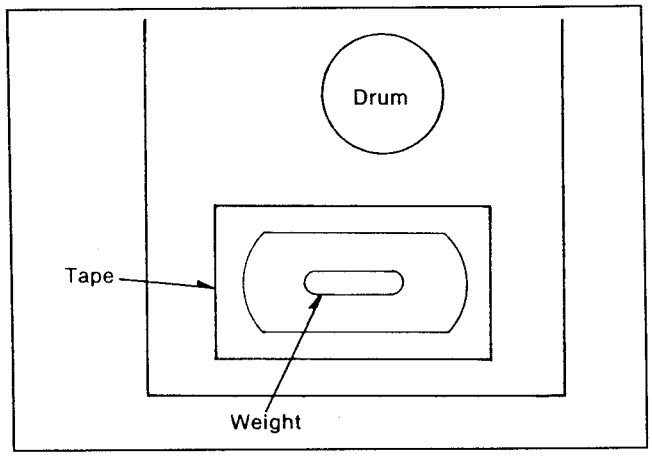

<STEP 1>

1. Remove the cassette compartment.
2. Set the service switch SW1-4 ON and turn the power ON.
3. Attach the Dial Torque Gauge Adaptor with the Dial Torque Gauge and set the Dial Torque Gauge on the Take Up Reel Motor.
4. Set the VTR into test mode.

   TEST → SERVO → REEL → MEASURE → S.T

5. Place the unit in the STOP mode.
6. Place the unit into the Take Up Reel Torque Adjustment mode as shown below.

   TEST → SERVO → REEL → F + F3

7. Adjust Front Panel adjustment VR so that the Take Up Reel Torque is within specification.

   SPECIFICATION = 53gr.cm ± 5gr.cm

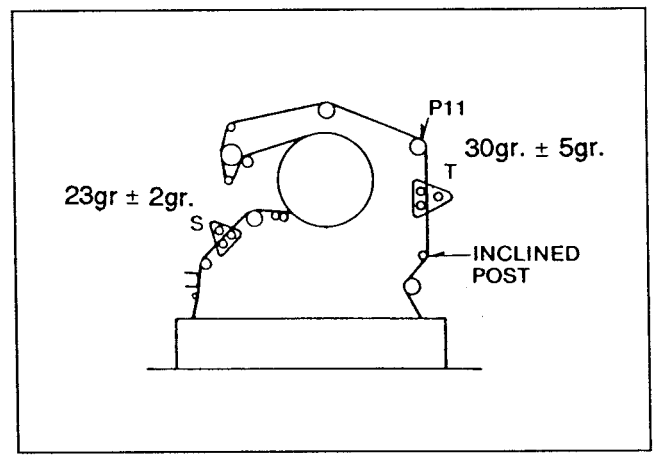

<STEP 2>

1. Insert a self recording tape.
2. Set the VTR into recording mode.
3. Adjust Take Up Reel Torque so that the tension is within specification.

   SPECIFICATION : 30gr.cm ± 5gr.cm

SW1	1	2	3	4	5	6
Factory Set	ON	ON	OFF	OFF	OFF	ON
Service Mode	ON	ON	OFF	ON	OFF	ON

Service Switch

5-6. SUPPLY REEL TORQUE ADJUSTMENT (S5:SERVO)

SPEC.	S REEL TORQUE = 45gr.cm ± 5gr.cm
TEST	SUPPLY REEL
MODE	TAPE LOADING COMPLETION WITHOUT CASSETTE TEST MECH, NO FRLD
TAPE	SELF-RECORDING TAPE
M.EQ	DIAL TORQUE GAUGE (150g max.) -VFK71 DIAL TORQUE GAUGE ADAPTOR -VFK0134 TENTELO METER -VFK0132
INPUT	
ADJ.	FRONT PANEL ADJUSTMENT VR

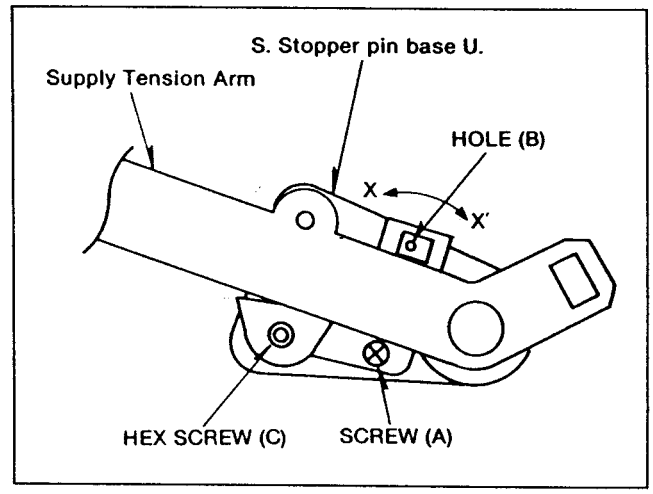

<STEP 1>

1. Remove the cassette compartment.
2. Set the service switch SW1-4 ON and turn the power ON.
3. Attach the Dial Torque Gauge Adaptor with the Dial Torque Gauge and set the Dial Torque gauge, on the supply Reel Motor.
4. Set the VTR into Test mode.

TEST → SERVO → REEL → MEASURE → S.T

5. Place the unit in the STOP mode.
6. Place the unit into the Supply Reel Torque adjustment mode as shown below.

TEST → F8(SERVO) → F2(REEL) → F+F2(SREEL)

7. Adjust Front Panel adjustment VR so that the Supply Reel Torque is within specification.

SPECIFICATION = 45gr.cm ± 5gr.cm

<STEP 2>

1. Insert a self recording tape.
2. Set the VTR into recording mode.
3. Adjust Supply Reel Torque so that the tension is within specification.

SPECIFICATION : 23gr.cm ± 2gr.cm (P2~P3)

4. If it is not within specification, loosen the screw (A).
5. Insert the Eccentric Screwdriver into Hole (B).
6. Adjust the position of S. Stopper Pin Base Unit so that the supply tension is 18gr ~ 25gr.
7. Insert the Hex Wrench to Hex Screw (C).
8. Adjust the position of S. Stopper Pin Base Unit so that the tension is 23 ± 2gr.
9. Tighten the screw (A), then reconfirm the tension after the screw (A) is tightened.

5-7. LOADING TORQUE ADJUSTMENT (S5:SERVO)

SPEC.	LOADING TORQUE = 60gr.cm ± 2gr.cm
TEST	TAKE UP REEL
MODE	
TAPE	
M.EQ	REEL TORQUE METER
INPUT	
ADJ.	FRONT PANEL ADJUSTMENT VR

<STEP 1>
1. Remove the cassette compartment.
2. Set the service switch SW1-4 ON and turn the power ON.
3. Attach the Dial Torque Gauge Adaptor with the Dial Torque Gauge and set the Dial Torque Gauge on the Take Up Reel Motor.
4. Set the VTR into Mechanism Test mode.

TEST → SERVO → REEL → MEASURE → L

5. Place the unit in the STOP mode.
6. Place the unit into the Take Up Reel Torque Adjustment mode as shown below.

TEST→F8(SERVO)→F2(REEL)→F + F1(LOADING)

7. Adjust Front Panel adjustment VR so that the Take Up Reel Torque is within specification.

SPECIFICATION = 60gr.cm ± 2gr.cm

5-8. SUPPLY (FWD.) TENSION ADJUSTMENT

SPEC	23g ± 2g (P2 - P3)
MODE	Tape PLAY, M cassette
ADJ.	S. STOPPED PUT BASE U
TOOL	Tentelo meter (VFK0132)
	Eccentric Driver (ø1.5) (VFK0357)
	Hex Wrench M2.6 (VFK0326 --- set)

<STEP 1>
1. Insert a M cassette.
2. Playback the tape.
3. Set the calibrated Tentelo meter between P2 and P3 post as shown in Figure.

<STEP 2>
1. Confirm the tension is within specification, if it is not adjust following.
2. Loosen screw "A".
3. Set the Eccentric Driver at hole "c" and adjust the tension is within specification.
4. Tighten the screw "A".

<STEP 3>
1. Set the Hex wrench M2.6 to the Hex screw "C".
2. Adjust the tension within specification.
3. This Hex screw "C" is for fine adjustment, must be within 5g deviation.

<STEP 4>
1. Place the unit STOP mode.
   (Loading completed condition)
2. SCOPE : TP2201
3. Confirm that thesensor voltage is 2.5V ± 0.25V.

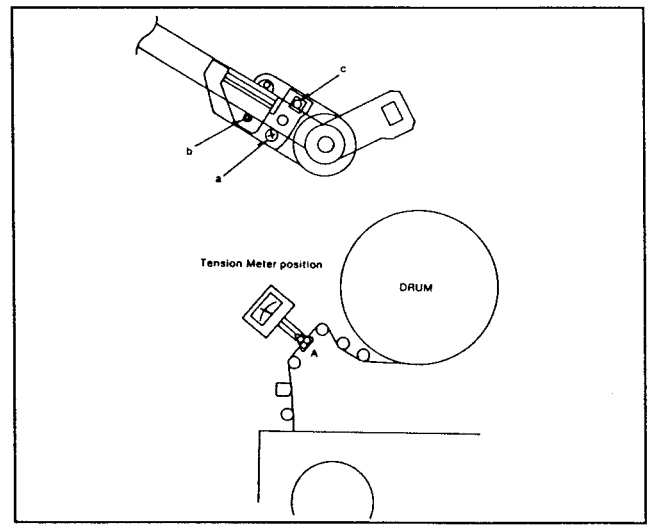

TAPE TRANSPORTATION POSTS LIMIT POSITION TABLE

Name	Limit	Adjustment
P1 Post	Free	Set Free Position (Torque 2.5Kg)
P2 Post	Lower Limit	Lower Limit or Free during PLAY mode (Torque 2.5Kg)
P3 Post	Upper Limit	Confirm the Entrance side Envelope is flat (Torque 2.5Kg)
P4 Post	Free	Set the flange 1/2 CW from lower limit (Torque 2.5Kg)
P5 Post	Upper Limit	Upper Limit during PLAY mode (Torque 2.5Kg)
P6 Post	Upper Limit	Confirm EXIT side Envelope is flat (Torque 2.5Kg)
P7 Post	Lower Limit	Lower Limit during PLAY mode (Torque 2.5Kg)
P8 Post	Upper Limit	Upper Limit during ALL mode (Torque 2.5Kg)
P9 Post	Free	Free in PLAY, REV mode --- Lower Limit (Torque 2.5Kg)
P10 Post	Free	Free or Lower Limit during PLAY and REV (Torque 2.5Kg)
P11 Post	Free	Free or Lower Limit during PLAY and REV (Torque 2.5Kg)
P12 Post	Free	Set Free Position (Torque 2.5Kg)

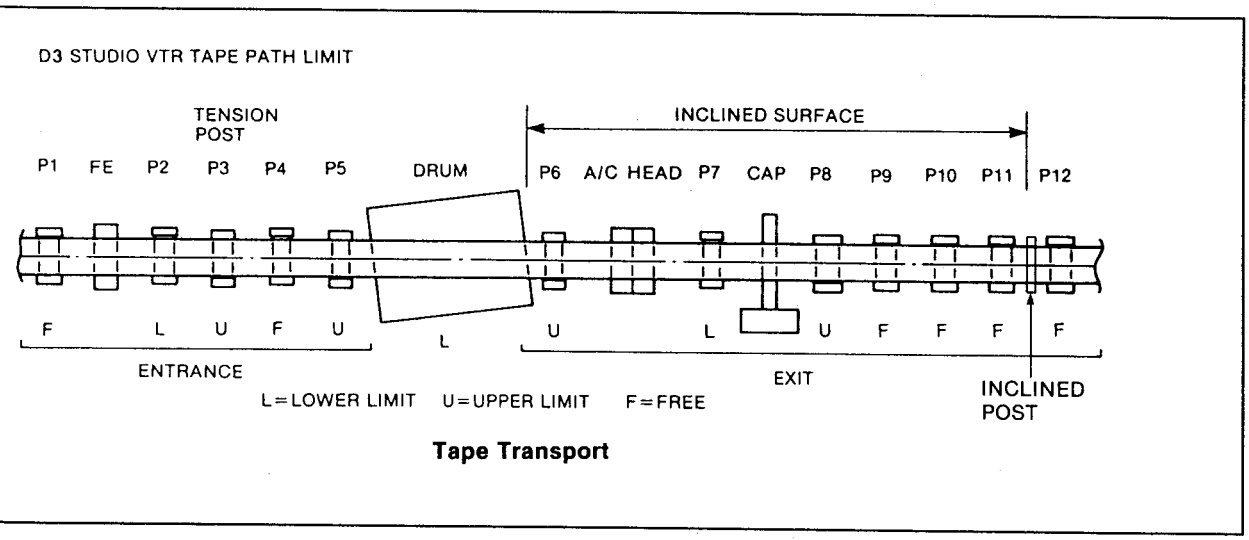

Tape Transport

TAPE TRANSPORT CONFIRMATION

<STEP 1>

1. Play back the work tape.
2. Confirm the all post limit as shown above and conform that there is no tape damage at each posts during playback.

<STEP 2>

1. Confirm that the P8 post is upper limit during playback.
2. Set the VTR VAR × -1 mode.
3. Confirm that there is no tape damage at P7 lower flange portion.
4. If there is the tape damage, adjust the P9 flange so that the tape damage at P7 post lower flange portion does not occur.
5. Confirm that there is no tape damage at P9 post flange portion.

<STEP 3>

1. Set the VTR VAR × -1 ~ VAR × 3 alternately.
2. Confirm that there is no tape damage at P9, P10, P11 lower flange portion.
3. If there is the tape damage, adjust P10, P11 post flange so that the tape damage at P9, P10, P11 does not occur.

POST HEIGHT PRE-ADJUSTMENT (FACTORY ADJUSTMENT)

Basically, Post Roller is positioned to original height after replacing (as long as, the hex screw is not misadjusted). However, in order to avoid the tape damage in Loading and Unloading mode, confirm that the height of the P1, P2, P4, P5 and P12 posts are set to specified height, using MECH. Plate and height fixture.

In order to do this, remove the cassette compartment, and install the mechanical neutral adjustment plate over the reel tables. Then place the post height fixture on the Mechanical Neutral Adjustment Plate as shown in figure. (thumbscrews of neutral plate can be removed as needed). The upper and lower flanges of the P1, P2, P3, P4, P5 and P12 post should be touch the upper and lower surface of fixture as shown in figure 3-16-6. If these posts do not touch the surface, adjust the post height as needed.

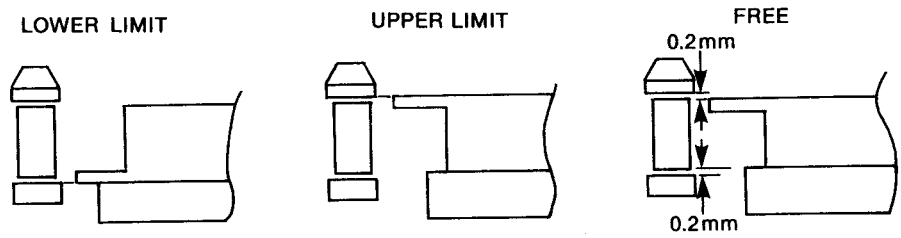

MICRO METER SETTING

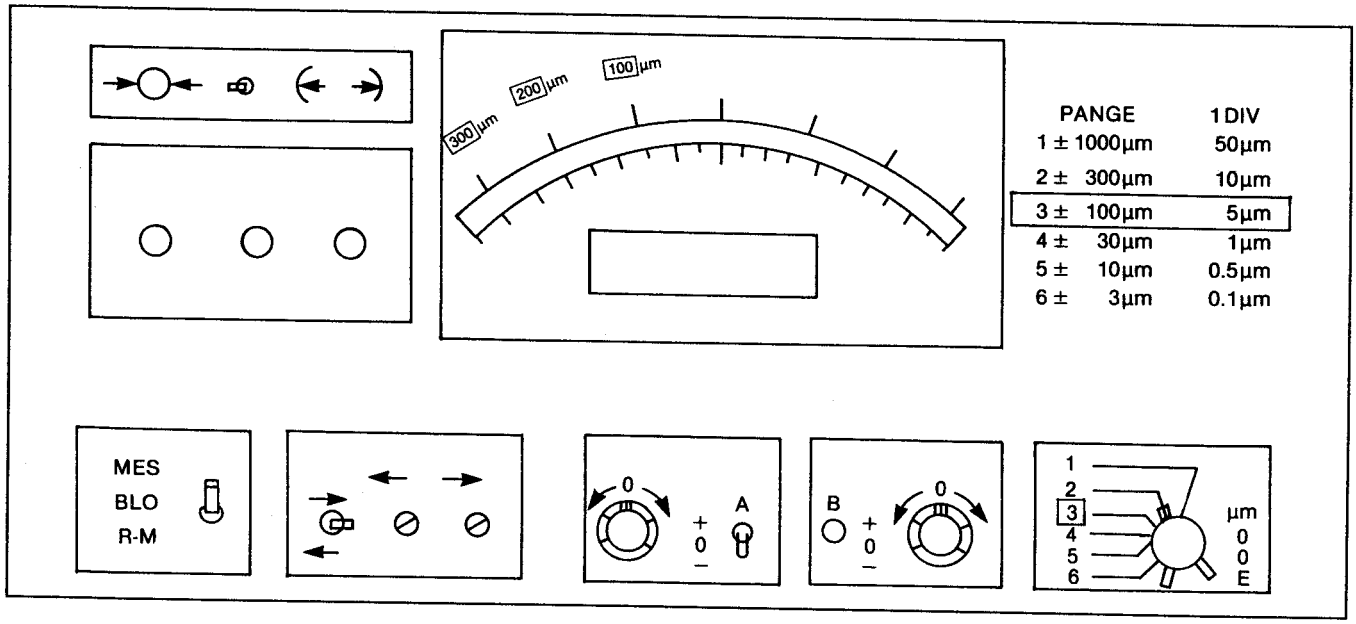

MICRO METER (TESA TTA20)

SETTING OF MICRO METER

1. Turn the power ON. (Rear panel)
2. Set the Range VR to 2. (Range ± 100µm)
3. Connect the Micro Meter Pick Up to A side on the rear panel.
4. Set the A select button to - or + side on the front panel.
5. Set the B select button to 0 side on the front panel.
6. Put the Calibration block on the Mech Neutral adjustment plate as shown in figure.
7. Change the Micro Meter gauge head pick up to flat type as shown in figure.
8. Push the Micro Meter Pick Up to Calibration block as shown in figure.
9. Adjust the VR to reference point. (0)

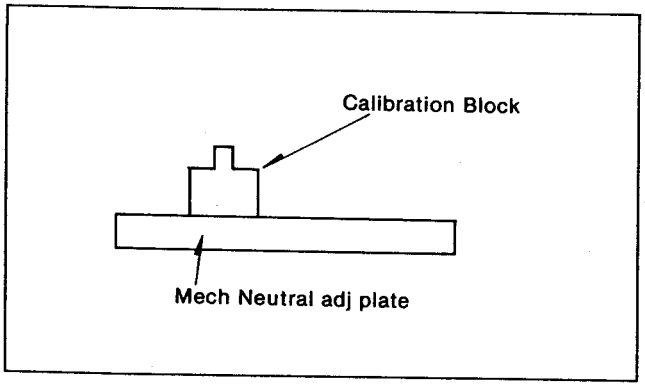

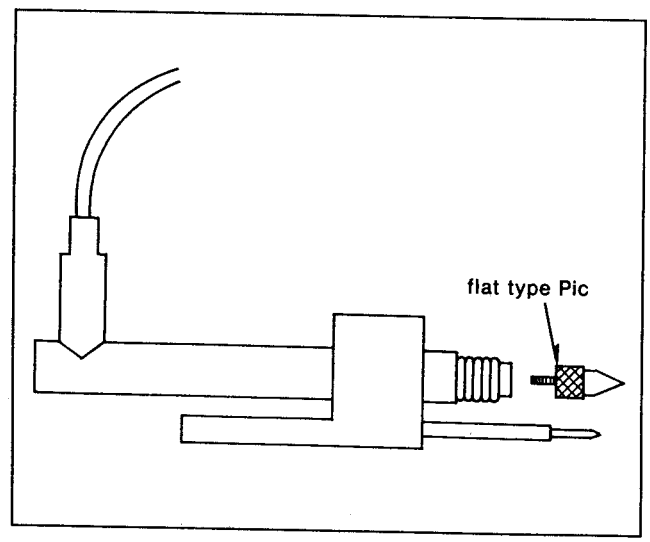

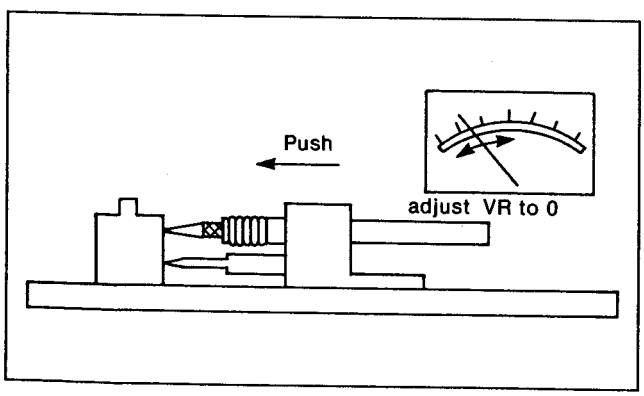

5-10. P3 POST INCLINED ANGLE ADJUSTMENT (FACTORY ADJUSTMENT ONLY)

SPEC	X direction 33μm ± 10μm (16.11' ± 5') Y direction 51μm ± 10μm (24.90' ± 5')
MODE	P3 Stopper touch condition (Manual sub-loading)
TOOL	Mech. Neutral Plate with P3 stopper Micro Meter and Pick up (7mm pitch), pick up Fixture Micro Meter caliblation block

1. Turn the power off.
2. Remove the cassette compartment with the connector as shown in item 2-3.
3. Turn the power ON and insert a M cassette compartment into the cassette compartment for an instant.
4. Set the neutral plate with P3 stopper on the reel base.
5. Set the Micro Meter pick up to the pick up fixture with M3 screw.
6. Calibrate the Micro meter pick up reference position with the calibration block. (Refer to setting of Micro Meter)
7. Rotate the sub-loading motor until the P3 post (tension post) just touched with the P3 stopper.
8. Set the Micro Meter pick up to the guide (X direction) and (Y direction) and measure the angle.
9. If the angle of X and Y directon are not within specification adjust screw a and b so that the angle of X and Y direction are within specification.
10. Paint the screw a and b.

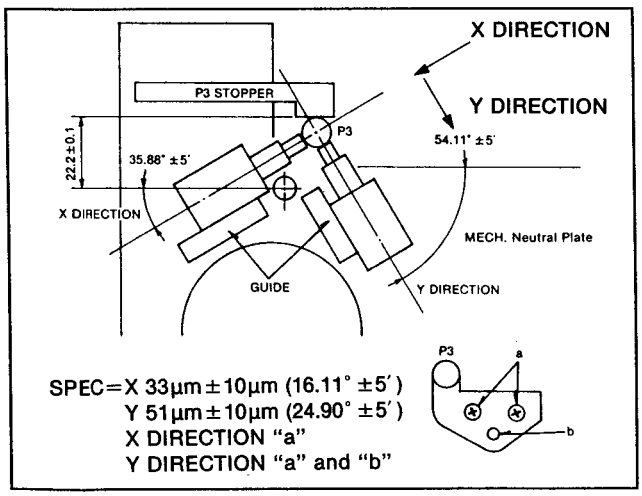

5-11. INCLINED POST ANGLE ADJUSTMENT 1 (FACTORY ADJUSTMENT ONLY)

SPEC	0μm ± 10μm (0° ± 5')
MODE	sub-unloading completion
TOOL	Mech. Neutral Plate
	Micro Meter (7mm pitch)
	Micro Meter Pick up Fixture
	Hex. Wrench M2.6

1. Turn the power off.
2. Remove the cassette compartment with the connector as shown in item 2-3.
3. Turn the power ON and insert a M cassette compartment into the cassette compartment for an instant.
4. Set the Mech. Neutral Plate on the Reel base.
5. Place the unit to unloading completion mode. (EJECT mode).
6. Calibrate the Micro Meter pick up reference position with the calibration block (Refer to setting of Micro Meter).
7. Set the Micro Meter pick up to the guide as shown in figure.
8. If the inclined post angle is not within specification adjust screw "a".
9. Paint the screw "a".

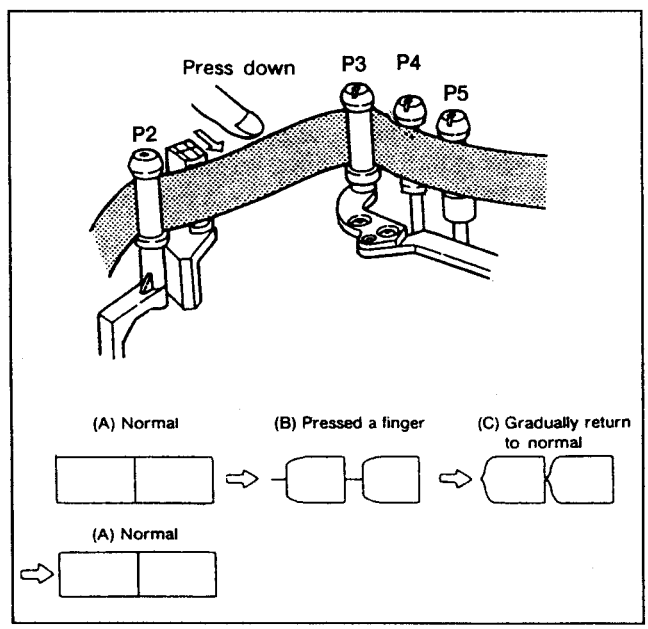

5-12. Inclined Post inclined angle adjustment 2 (Factory Adjustment only)

SPEC	Inclined Post flattely touch with the inclined
MODE	Loading Completion
TOOL	Mech. Neutral Plate without P3 stopper
	Inclined Post Inclined Angle adjustment tool
	Eccentric driver (ø2)

1. Turn the power off.
2. Remove the cassette compartment with the connector as shown in item 2-3.
3. Turn the power ON and insert a M cassette compartment into the cassette compartment for an instant.
4. Set the Mech. Neutral Plate on the Reel base and remove the P3 stopper.
5. Set the Mechanism to loading completion condition.
6. Calibrate the Micro Meter pick up reference position with the calibration block. (Refer to setting of Micro Meter).
7. Set the Inclined Post Inclined Angle adjustment tool as shown in figure.
8. Confirm the Inclined Post is flattely touched with the tool surface.
9. If it is not loosen screw "a" and set the eccentric driver to the hole "b".
10. Adjust the angle of the Inclined Post so that the post just touches with the tool surface.
11. Tighten screw "a".

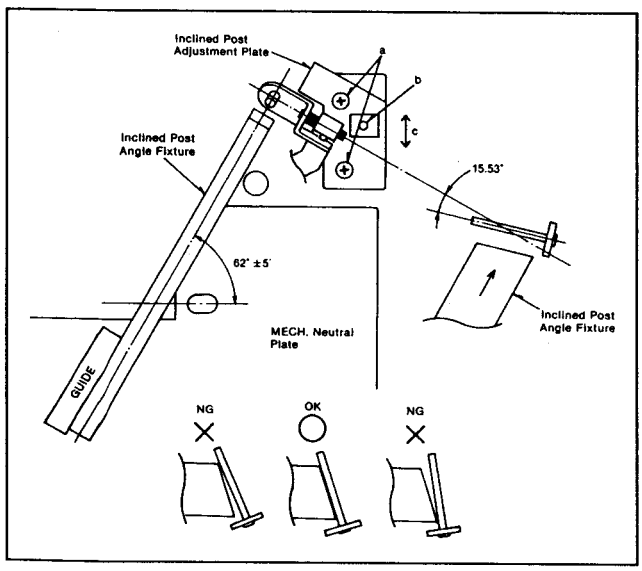

5-13. P3 POST HEIGHT ADJUSTMENT

TEST	TP11, TP12 (REC AMP P.C.BOARD), TP37[D4](H.SW) (SERVO P.C.BOARD)
MODE	LINEAR MASTER TAPE, PLAY mode (confirmation) STOP mode (adjustment)
MACHINE CONDITION	Select the TEST MENU → Select the RF mode → Select the TRACKING mode → Set the VAR mode
SPEC	RF Envelope keeps flat when the tracking VR is adjusted
TOOL	POST DRIVER VFK0293, VFK0910, VFK0912, VFK0878 and VFK0955

1. If the tape curling occurs at the tape path, place the unit in the STOP mode to protect for tape damage and re-adjust the post height.
2. Set the adjustable torque driver (VFK0878) to 2.5Kg.
3. Set the P4 and P5 to no limit (Free) by using VFK0910, VFK0912, and VFK0878 (post driver with adjustable torque driver).
4. Adjust P3 post by using VFK0293.
5. Confirm that the RF envelope keep flat when the tracking VR is adjusted in PLAY mode.
6. Tighten the upper flange (with 2.5Kg torque) of P3 by using torque driver and VFK0955.
7. After adjustment of P3 post, set the P4 and P5 to original limit. Be sure no curl there is on the tape.
8. Still out of specification check the P3 post Inclined angle adjustment.

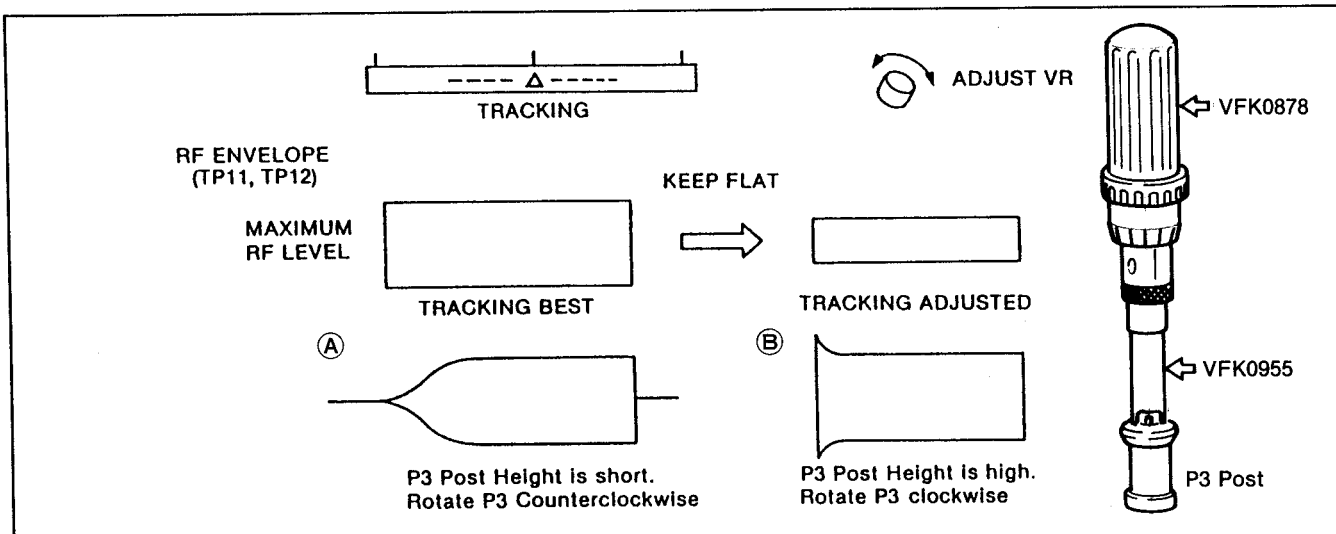

*When tighten the P4 and P5 posts, torque value is 2.5Kg by using the torque driver.

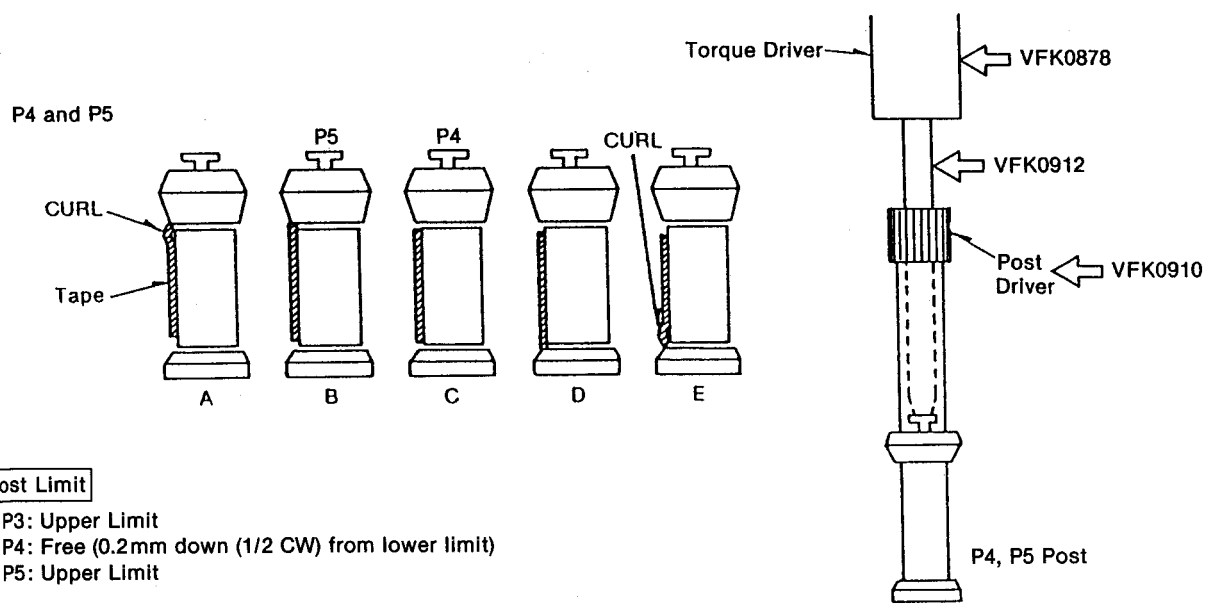

Post Limit

P3: Upper Limit
P4: Free (0.2mm down (1/2 CW) from lower limit)
P5: Upper Limit

5-14. P6 POST HEIGHT ADJUSTMENT

TEST	TP11, TP12 (REC AMP P.C.BOARD), TP37[D4](H.SW) (SERVO P.C.BOARD)
MODE	Alignment tape (2) LINEAR portion, PLAY mode (confirmation) STOP mode (adjustment)
MACHINE CONDITION	Select the TEST MENU → Select the RF mode → Select the TRACKING mode → Set the VAR mode
SPEC	RF Envelope keeps flat when the tracking VR is adjusted
TOOL	POST DRIVER (VFK0293) → VFK0910, VFK0912 and VFK0878

1. Set the variable torque driver to 2.5Kg.
2. Adjust P6 post by using VFK0910, VFK0912 and VFK0878 (post driver with adjustable torque driver).

Note: If it is out of specification, confirm the A/C Head tilt adjustment.

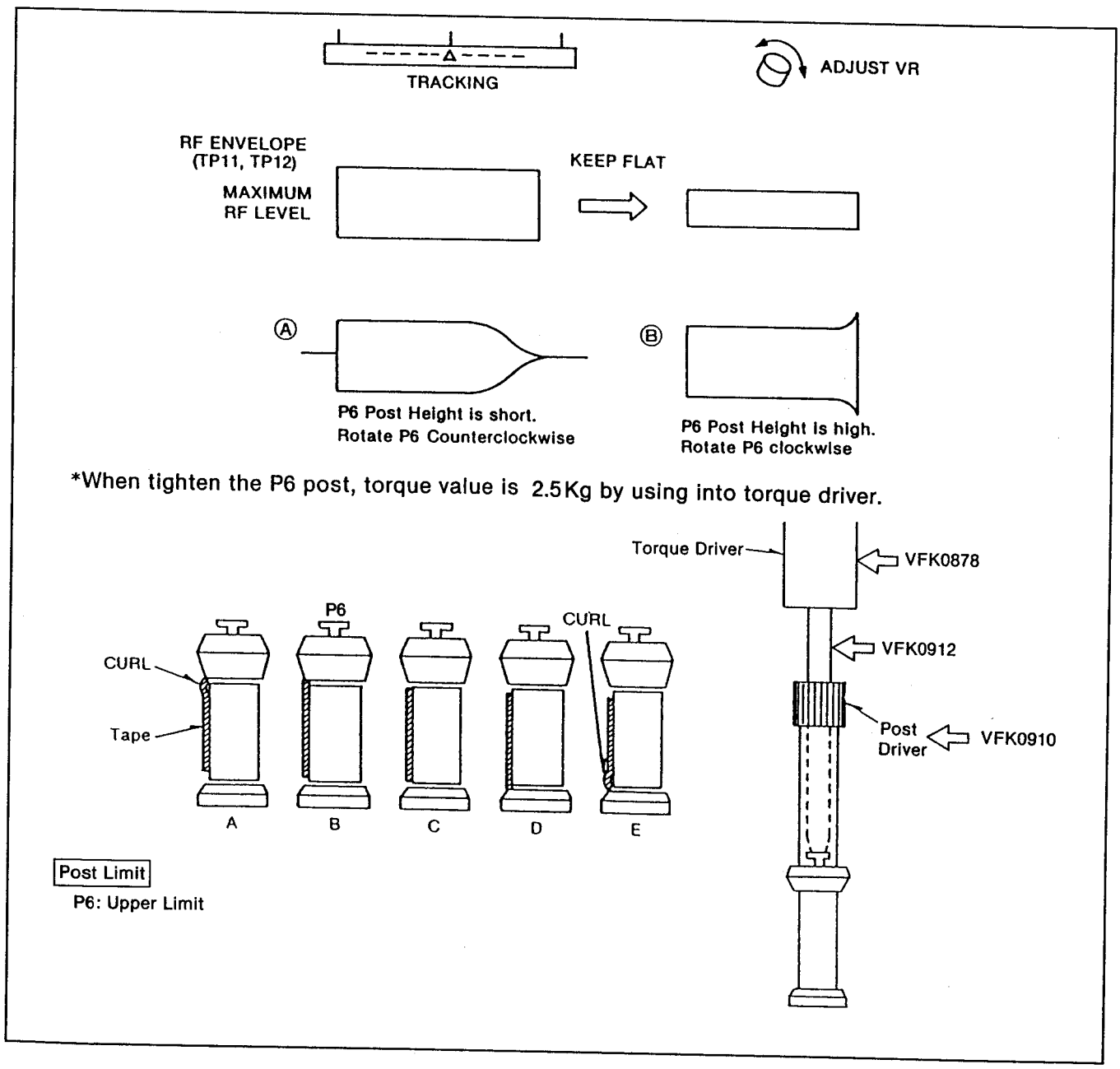

5-15. P7, P8, P9, P10 AND P11 POST HEIGHT ADJUSTMENT

	LIMIT (PLAY mode)	TAPE HEIGHT					ADJUSTMENT
		A	B	C	D	E	
P7 POST	Lower Limit				O		Just press lower limit without Tape curl.
P8 POST	Upper Limit		O				Just touch upper flange.
P9 POST	Free (or Upper Limit or Lower Limit)		O	O	O		Set SHTL ×-1. Adjust P9 post so that tape curl does not appear at P7 lower flange.
P10,P11 POST	Free (or Upper Limit or Lower Limit)		O	O	O		Alternately set SHTL ×3 and ×-1, adjust P10 and P11 so that the tape curl will not appear P9, P10, P11 pots.

TAPE	Self Recording Tape
MODE	Play, SHTL mode
TOOL	POST DRIVER, DENTAL MIRROR

* When tighten the each posts, torque value is 2.5Kg by using the torque driver.

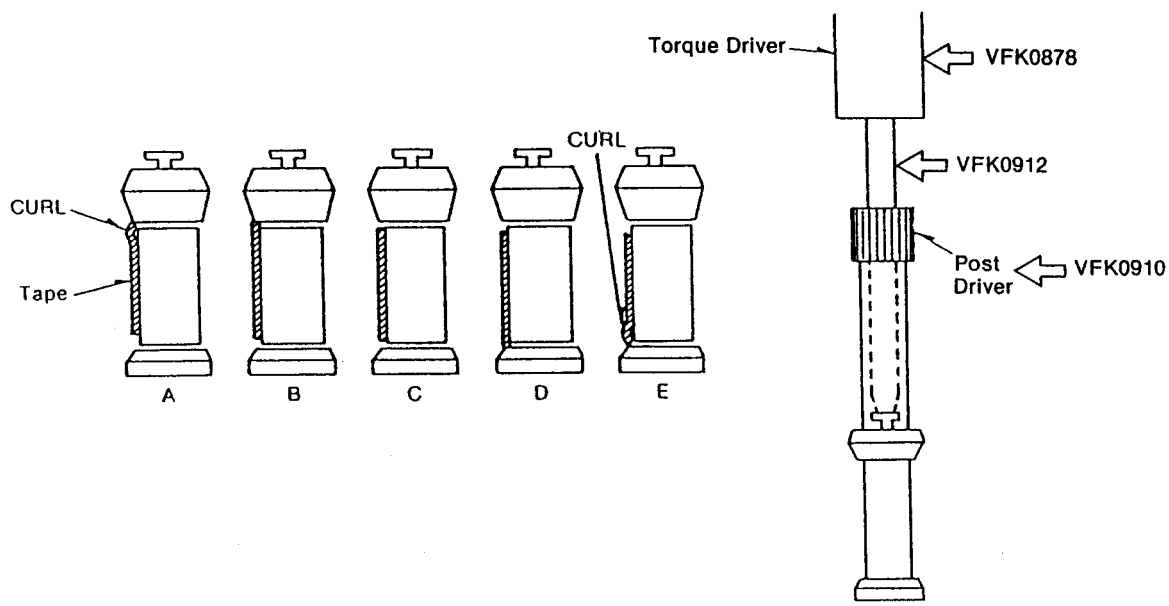

5-16. P4, P5 POST HEIGHT ADJUSTMENT

	LIMIT (PLAY mode)	TAPE HEIGHT					ADJUSTMENT
		A	B	C	D	E	
P4 POST	Free			O			Adjust P4 post to free.
P5 POST	Upper Limit		O				Just press upper limit without Tape curl.

TAPE	TP11, TP12 (REC AMP BOARD), TP37 (H.SW)(SERVO BOARD)
SPEC	Output envelope is flat
MODE	LINIEAR MASTER PLAY (P4, P5 Post)
TOOL	Post Driver, Dental Mirror (VFK0878, VFK0912 and VFK0910)

1. Set the VTR to VAR ×-1 and VAR ×3 alternately and confirm that the tape curling at lower and upper flange on the P2 and P3 post are not appeared.
2. Set the VTR to FF and REW mode alternately and confirm that the tape curling at lower and upper flange on the P2 and P3 post are not appeared.
3. If appear the tape curling, adjust the P5 post height so that the tape curling is disappeared on the each modes (VAR ×-1 to VAR ×3 / FF and REW)

* When tighten the each posts, torque value is 2.5Kg by using the torque driver.

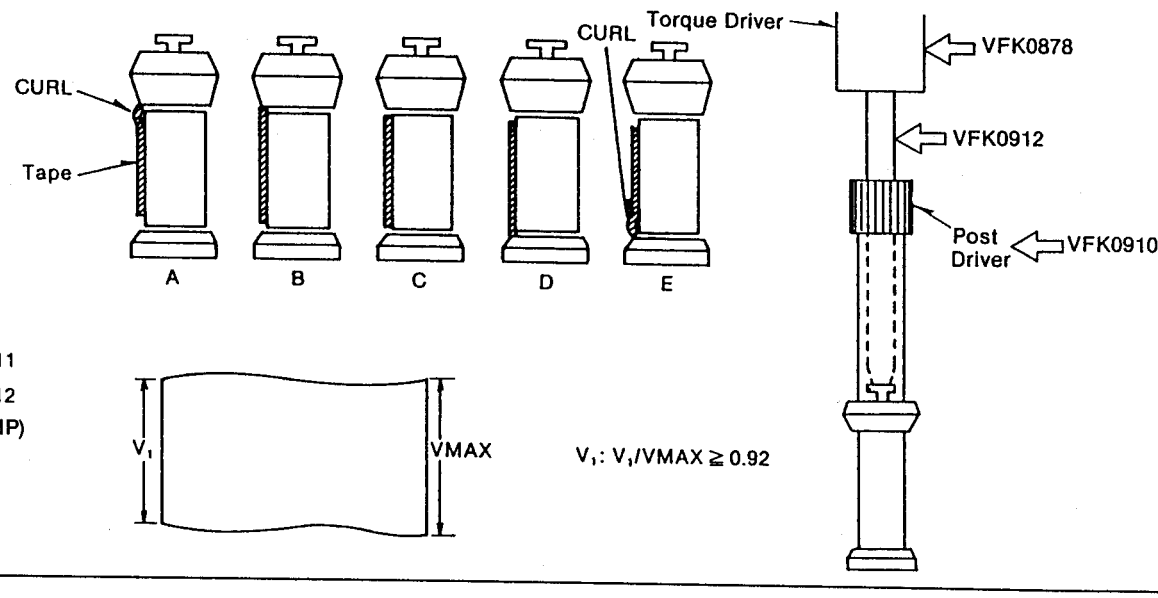

5-17. A/C HEAD ADJUSTMENT FLOW CHART

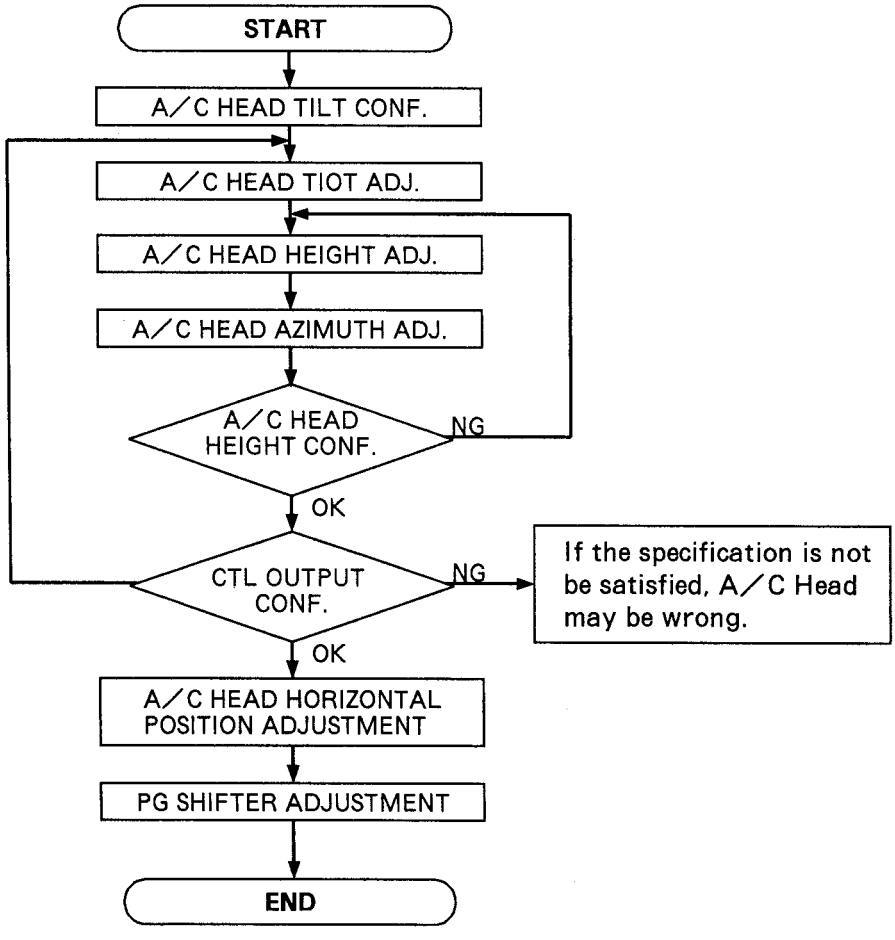

5-17-1. A/C HEAD TILT CONFIRMATION

Before adjust A/C Head Tilt, please confirm A/C Head tilt using tilt tool. This Tool is for coarse check of A/C Head tilt, therefore final confirmation is necessary checking with cue audio level, CTL pulse level and RF envelope.

Tool List: A/C Head Tilt Tool (VFK1008)
Calibration Plate (1)(VFK1007)
Calibration Plate (2)(VFK1006)

1. CALIBRATION PROCEDURE

1) Attach the calibration Plate (1) to the A/C Head Tilt Tool as shown below.
J and L, K and M should touch each other.

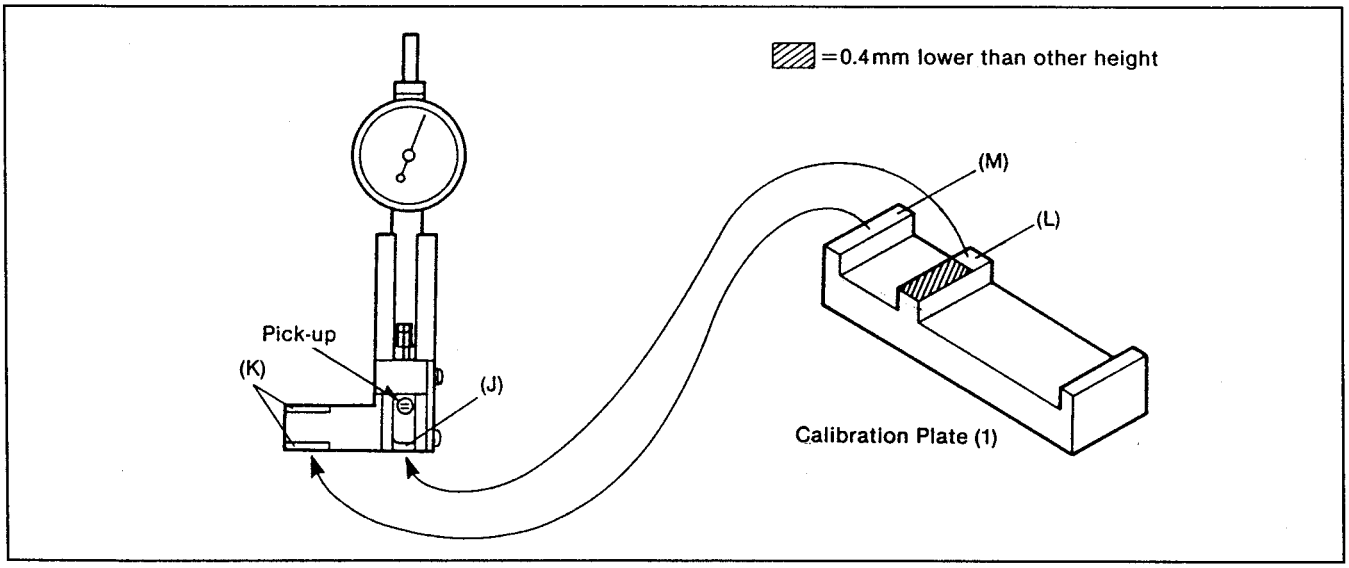

2) Gently press the Pick Piece of A/C Head Tilt Tool from rear side so that the pick piece is protruded from reference surface about 0.4mm with calibration plate (1) as shown below.

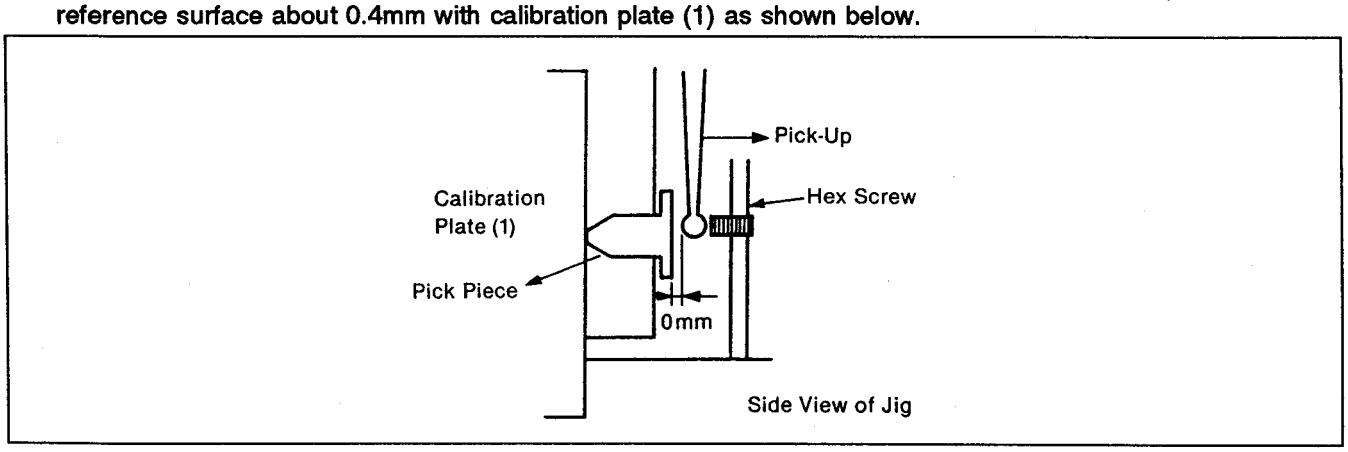

3) Turn the Hex screw clockwise so that the Pick-up touches the Pick-piece slightly. Then turn the Hex screw two turn counterclockwise.

4) Attach calibration plate (2) to the A/C Head Tilt Tool as shown below.
J and N, K and O should touch.

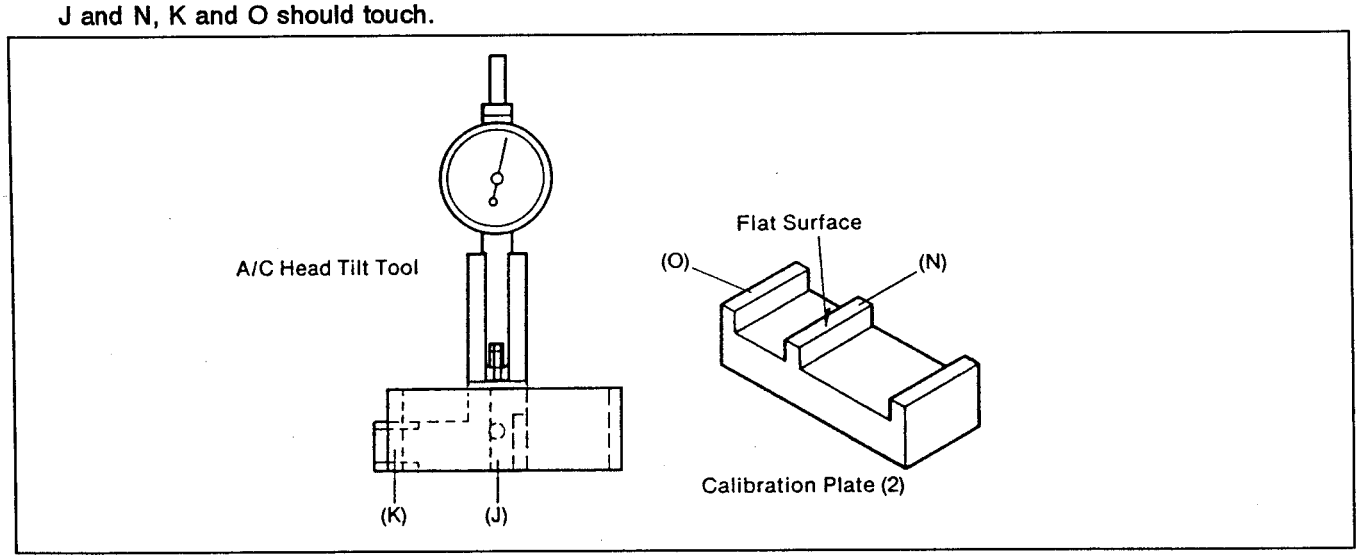

5) Hold (K) portion and gently press at (J) to set the dial gauge reading to "0".
6) Remove the Calibration Plate (2) and confirm that the gauge reading is -300μ ~ -500μ with no pressure.
7) If it is not, repeat step 1) ~ 5) until gauge reading is -300μ ~ -500μ.

2. MEASURING PROCEDURE

1) Gently install the A/C head Tilt Tool onto the P6 Post.

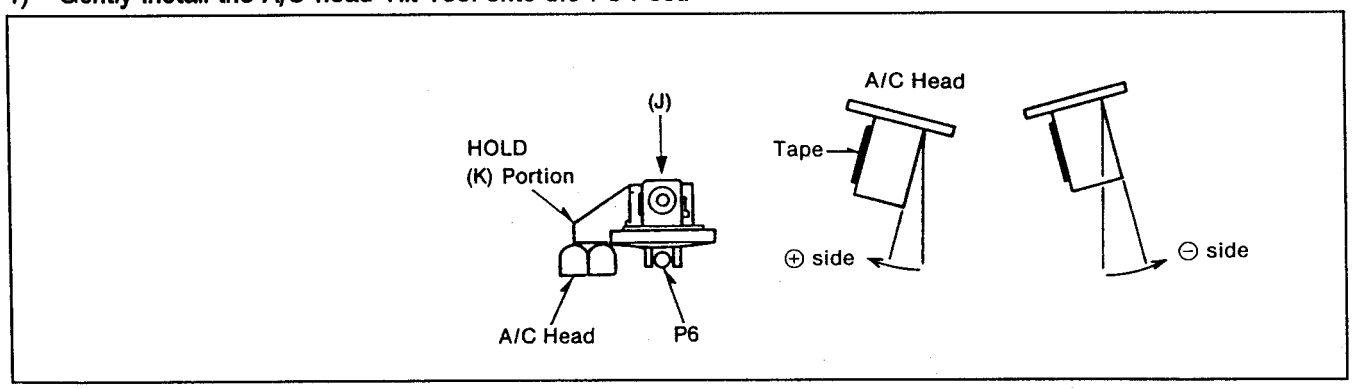

2) Hold (K) portion as reference and getly press (J) portion to measure tilt reading.
3) Confirm that the gauge reading is 0 ~ -50μm.
4) If it is not refer to the following A/C Head Adjustment Procedure.

5-18. A/C HEAD TILT ADJUSTMENT

SPEC	A/Amax ≥ 0.95 $V_1/V \geq 0.95$
MODE	Alignment Tape (2) Linear portion, Cue 15KHz portion
TEST	TP20 (CTL pulse) Servo Board, TP11 or TP12 on Rec Amp Board, CUE OUT (Rear)
ADJUST	HEX screw A

<STEP 1>

1. Playback the Alignment tape Linear portion and confirm the RF envelope at TP11 and PT12.
2. Confirm that the RF envelope has no droop or waving on exit side.
3. If droop or waving occur, adjust hex screw A or P6 post height.

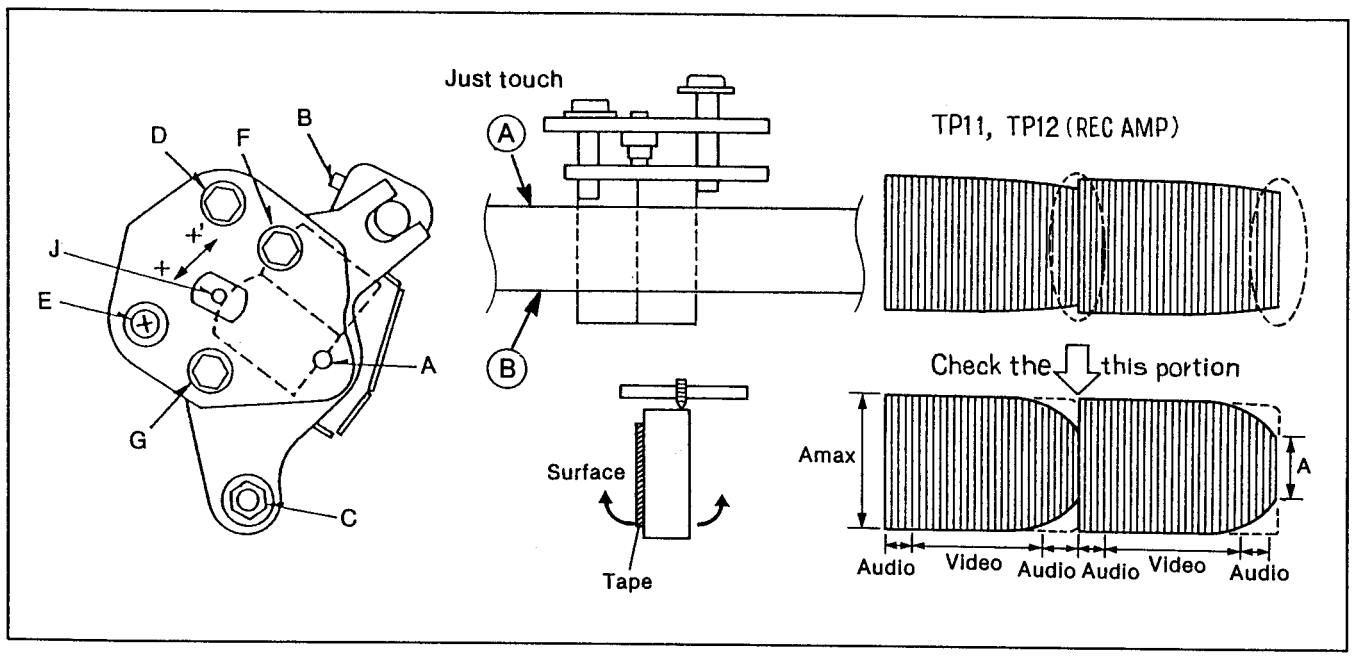

<STEP 2>

1. Playback the cue 15KHz portion and verify the audio level.
2. Tap the supply tension arm and confirm that the audio level and CTL level are maximum.
3. If not, readjust hex screw A.

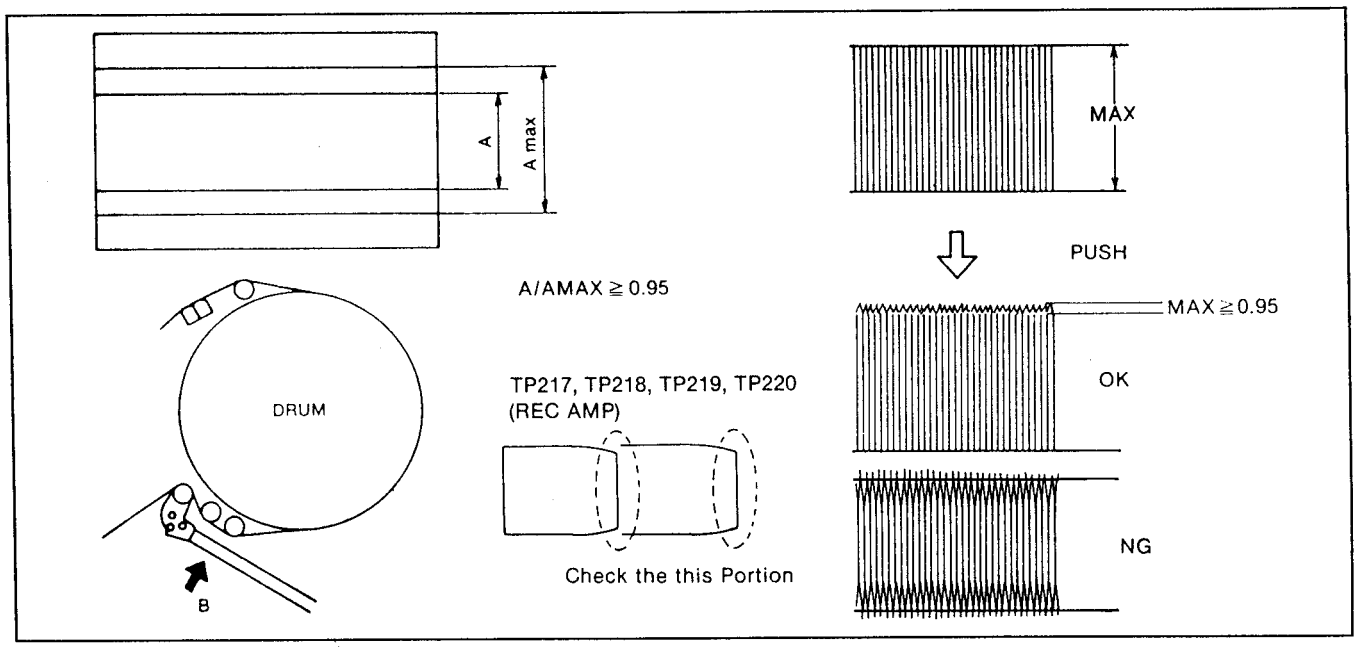

<STEP 3> Height Confirmation

1. Playback the Linear portion and confirm the CTL level.
2. Gently press the A and B portion of the tape.
3. If CTL level will be increased, loosen the hex screw B and readjust the nut C.

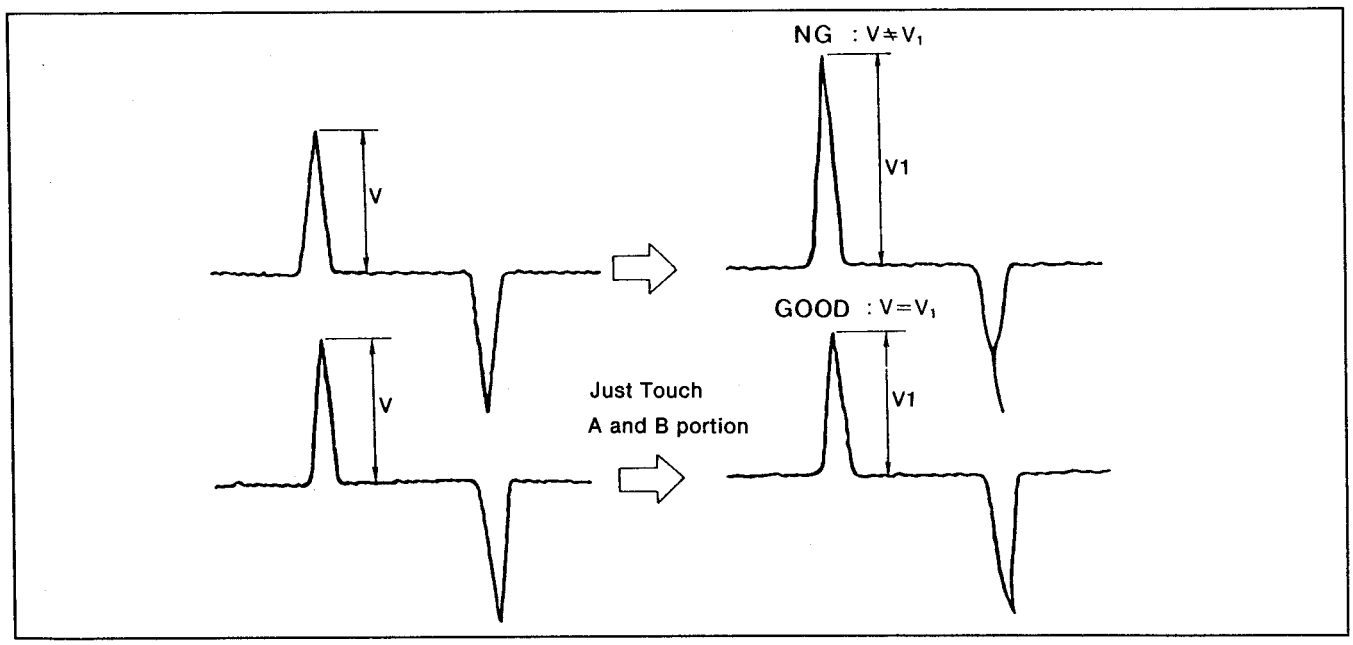

5-19. A/C HEAD HEIGHT ADJUSTMENT

SPEC	CTL Output Level is maximum
MODE	Alignment Tape (2) 15KHz portion Playback
TEST	TP20 on S5 (SERVO) Board
	CUE Audio Output
CONFIRM	Press tape H and I direction and confirm the audio level is decreased
TOOL	HEX Wrench M3, NUT DRIVER M4
M.EQ	Oscilloscope

<Step 1>

1. Connect scope CH1 : TP20 on S5 (SERVO) Board
   CH2 : Cue Audio Output
2. Loosen screw "B" slightly.
3. Press tape gently "H" and "I" direction.
4. If the CH1 (CTL) level increase "H" direction, rotate screw "C" counterclockwise.
5. If the CH1 (CTL) level increase "I" direction, rotate screw "C" clockwise.
6. Confirm the CUE Audio level using same procedure of CTL level.
7. Tighten screw "B".

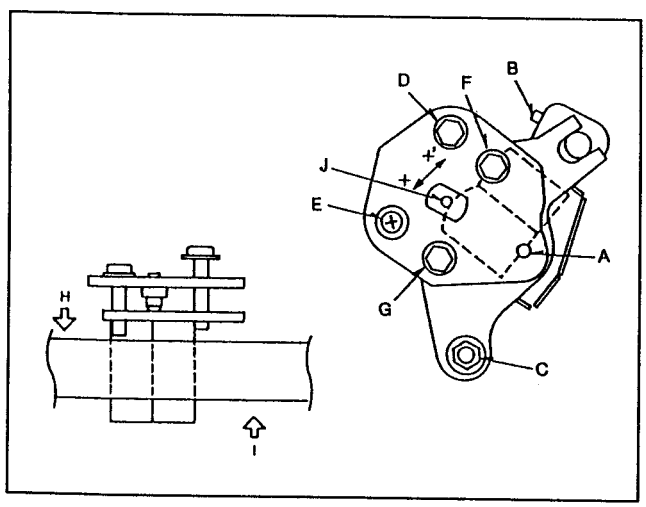

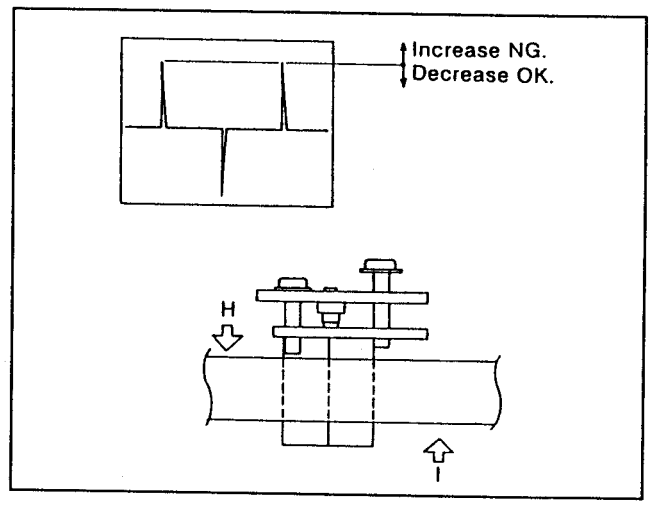

5-20. A/C HEAD AZIMUTH ADJUSTMENT

SPEC	Cue Audio Output is maximum
MODE	Alignment Tape (2) cue 15KHz portion Playback
TEST	Cue Audio Output
ADJUST	SCREW "D", SCREW "E"

<Step 1>

1. Connect scope to Cue audio output.
2. Loosen Screw "E" about 1/4 turn ccw.
3. Playback the Cue Audio Master tape.
4. Adjust the screw "D" so that the Cue audio level is maximum.
5. Tighten the 2 screws "E" and "D" alternately keeping the cue audio level is maximum and finally tighten up the screw "E" to 4Kg by using the torque driver.

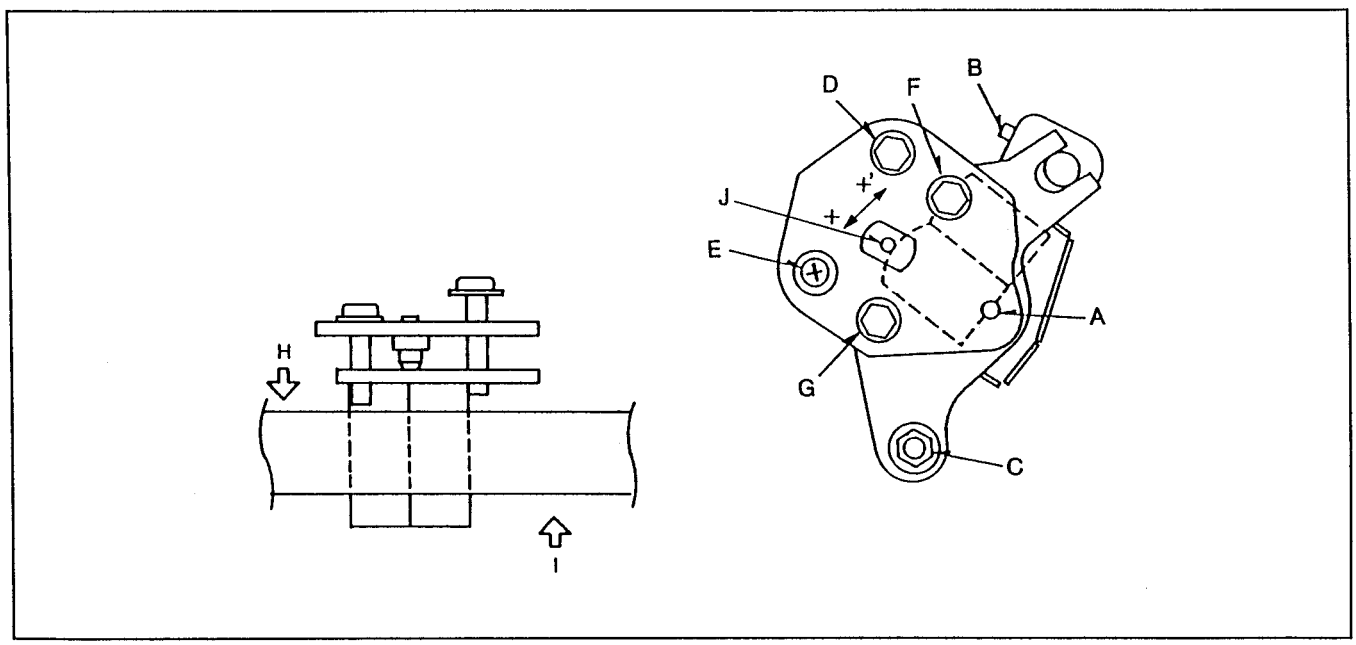

5-21. CTL OUTPUT CONFIRMATION

SPEC	$V_1 \geq 5$ [V] $V_2 \geq 5$ [V]
MODE	Alignment Tape (2) Linear Portion, Cue 15KHz Portion
TEST	TP20 (CTL pulse) Servo Board

<STEP 1>

1. Confirm the CTL pulse level is more than 5V.
2. If it is not, readjust A/C Head Tilt, Height and Azimuth.

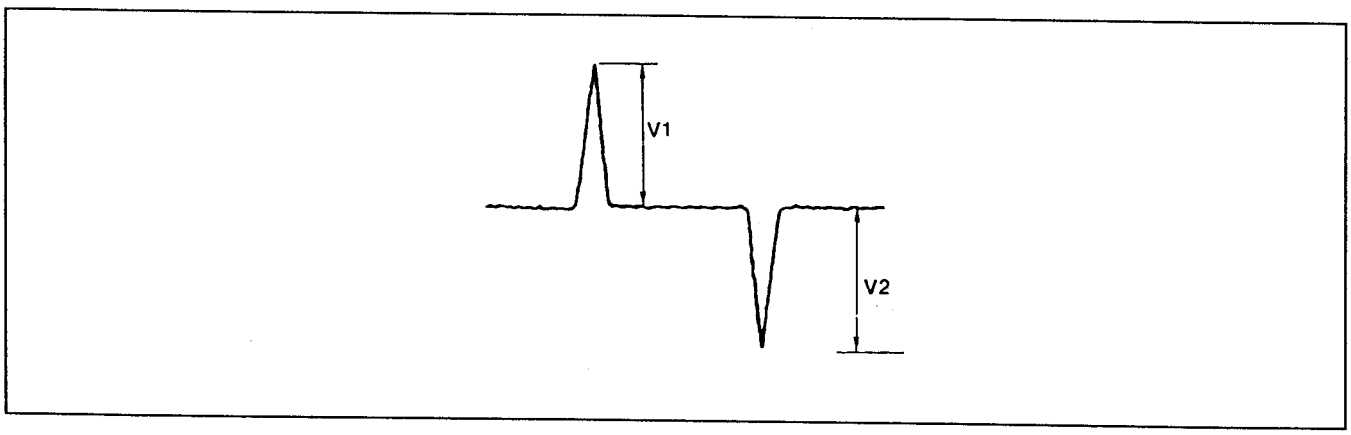

5-22. A/C Head Horizontal Position Coarse Adjustment

SPEC	RF Envelope, Head SW and CTL relationship is shown in Fig.
	V2/Vmax ≥ 0.95 (Fig. B)
TAPE	A/C Head Horizontal Position Master Tape
	Alignment No.2 Linearity Portion
MODE	PLAY mode, Tracking VR Fix
TEST	REC AMP TP11 or TP12 (RF)
	S5 SERVO TP20 (CTL) [H1], TP49 (HEAD SW)
ADJ.	A/C Head Screw "F" and "G", Hole "J" (Torque 5Kg ± 1Kg)
TOOL	Eccentric Driver (ø2) VFK0358, VFK0878 and VFK0920

*Set the variable torque driver (VFK0878) to 5 Kg and tighten 2 screws (F) and (G).

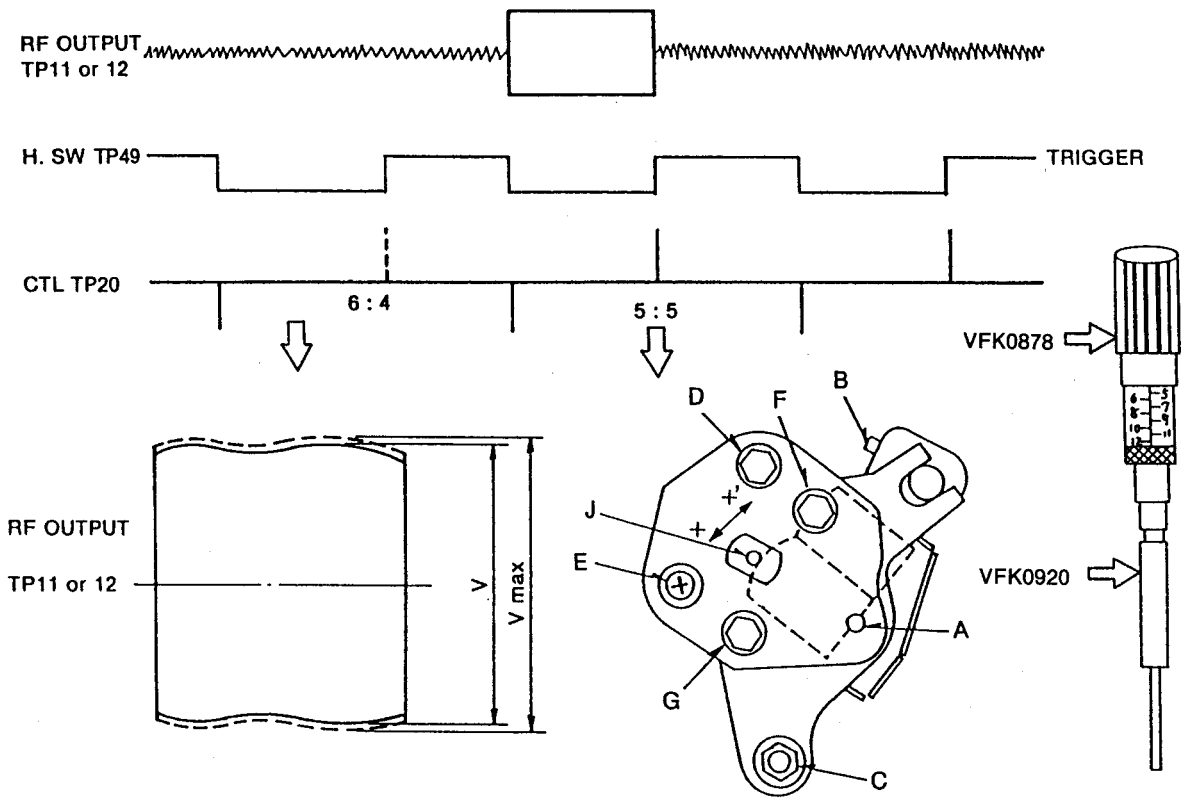

5-23. A/C Head Horizontal Position Fine Adjustment

SPEC	0 ± 2μm (0 ± 3mm on the Tracking display)
MODE	Alignment tape No.2 (Color Bar Shuffling OFF portion)
ADJ.	A/C Head Screw "F" and "G", Hole "J" (Torque 5Kg ± 1Kg)
TOOL	Eccentric Driver (ø2), VFK0358, VFK0878 and VFK0920

1. Insert the Alignment tape No.2 (Color Bar Portion).
2. Set the machine condition as follows.
   MANUAL EDIT → F2 INSERT → F12 SETUP → F10 OPT AUTO
3. Press the PLAY button.
4. Confirm that the tracking meter include ± 2μm (±3mm) as shown in Figure.
5. If not, readjust the A/C Head horizontal position.

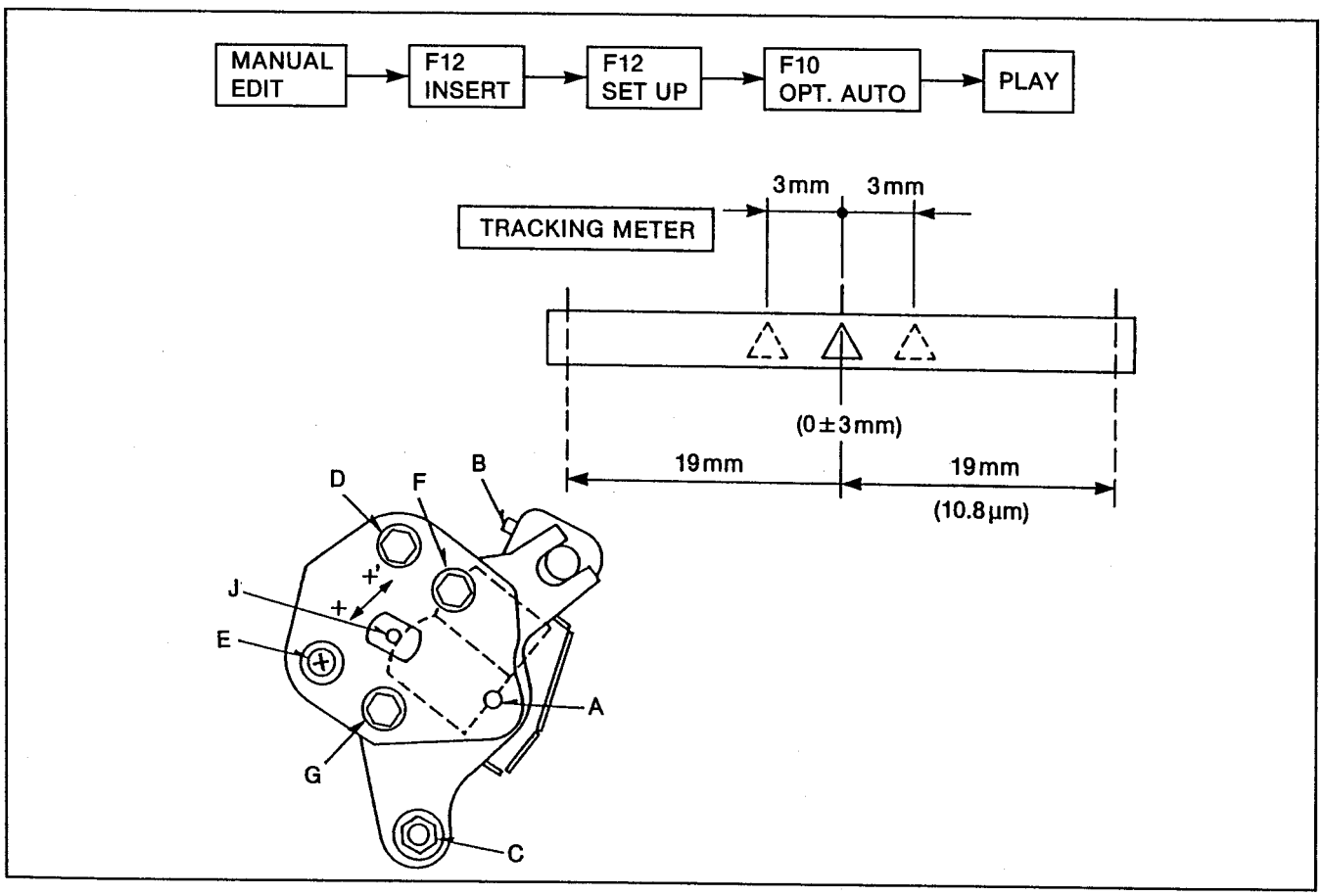

5-24. FINAL CONFIRMATION OF TRACKING OPTIMIZE

SPEC	0 ± 2μm (0 ± 3mm on the Tracking Display)(64 ± 11 at Tracking Data Display)
MODE	Alignment tape No.2 (Color Bar Shuffling OFF portion)
ADJ.	A/C Head Screw "F" and "G", Hole "J"
TOOL	Eccentric Driver (ø2), VFK0358, VFK0878 and VFK0920

After adjusted the A/C Head Horizontal position (refer to 5-23) Please confirm exact position of A/C Head as follows.

1. Set the Service SW1-4 to ON on the front back panel.
2. Set the VTR to Tracking Data Monitoring mode as follows.
   HOME MENU F8 UB → MANUAL EDIT F2 INSERT → F12 SET UP → F10 OPT ONCE or OPT AUTO.
3. During monitoring mode, Tracking data will be appeared at T/C position instead of T/C data as follows.

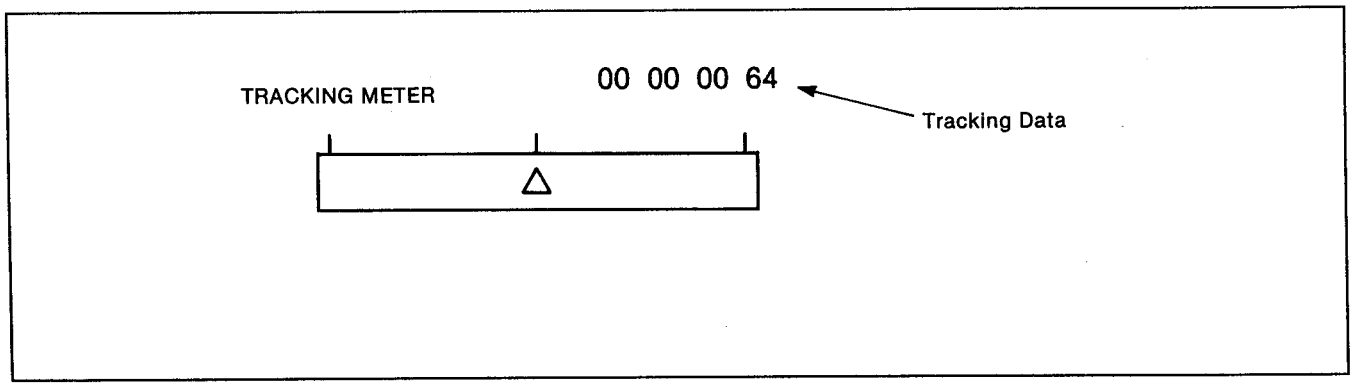

4. Insert the alignment tape No.2 (color bar shuffling OFF).
5. Press READY and PLAY button at same time.
6. Hight speed optimizing in progress.
7. After completed, display indicate tracking data as follows.
8. Read the indicated data at T/C position.

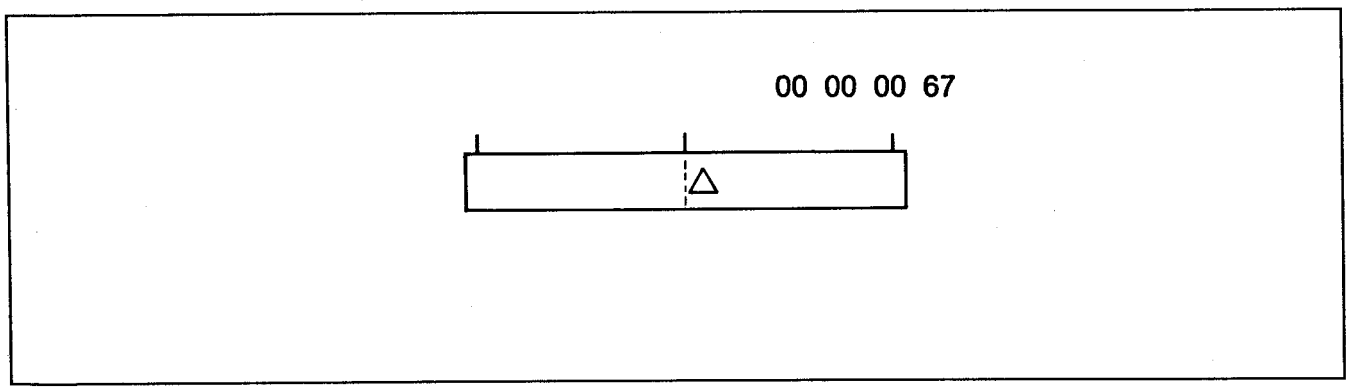

9. Repeat tracking optimize 2 ~ 3 times and get a average data.
10. If out of specification (64 ± 11μm) readjust A/C Head Horizontal position precisely.

5-25. PG SHIFTER ADJUSTMENT (S5:SERVO)

SPEC	PAL: 25.5 ± 0.5sec, NTSC: 27.0 ± 0.5μsec
TEST	TP11 (REC AMP), TP37 (SERVO)
MODE	PLAY
TAPE	75% Color Bar Portion Alignment Tape
M.EQ	OSCILLOSCOPE
INPUT	
ADJ.	SW2 (F2), SW3

<STEP 1>
MENU CONDITION

TEST MENU

Select the TRACKING FIX/VAR F10 to "FIX".

<STEP 2>
1. SCOPE CH1 : TP11 (REC AMP)
   SCOPE CH2 : TP37 (SERVO)
2. SCOPE TRIGGER : CH2
3. Adjust SW2, 3 and 4 so that the period T is as shown in Figure.

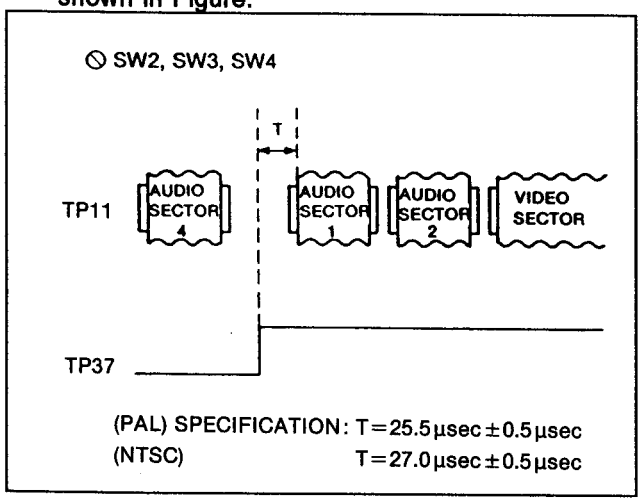

SW2: Fine adjustment
SW3: Pre fine adjustment
SW4: Coarse adjustment

6. MAJOR MECHANISM PARTS REPLACEMENT AND ADJUSTMENT PROCEDURES

6-1. GENERAL

When mechanical parts are replaced, pay attention to the following notes:

(1) Always turn the power off before replacing any parts.
(2) If any adjustment is necessary after the part is replaced, perform the adjustment after replacement.
(3) Use proper hand tools of fixtures.
(4) Be sure to clean the parts after replacement.

Also when the mechanical parts are replaced, follow the replacement procedures.

6-2. CENTER DRUM REPLACEMENT AND ADJUSTMENT

1. OPEN THE TOP PANEL

2. REMOVE THE HEAD CLEANING UNIT

Remove the two screws which are not glued.
One of the screw is under of the spring, so pull the spring knob and makes the space to insert a screw driver.

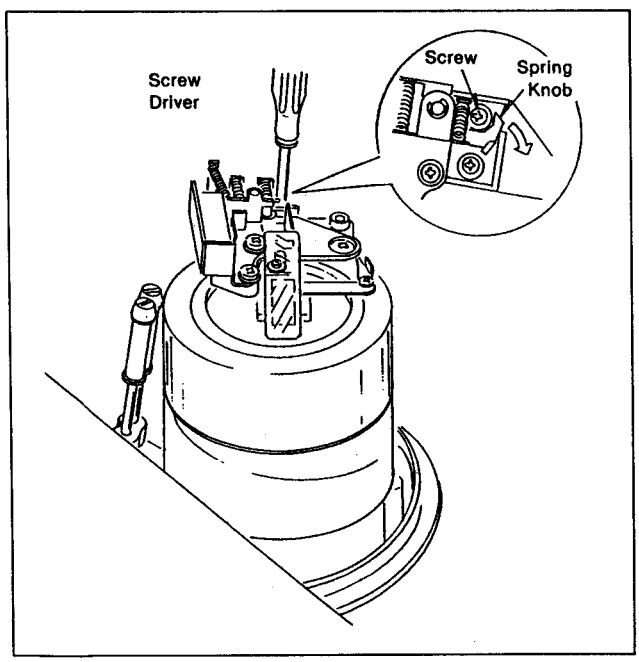

Fig. 8

3. REMOVE THE BRUSH UNIT

Loosen the screw of the brush unit stopper and separate the brush stopper unit from the brush unit, then rotates the brush unit about 90 degrees.
Remove the 2 screws (A) holding the brush unit in position see figure 9.

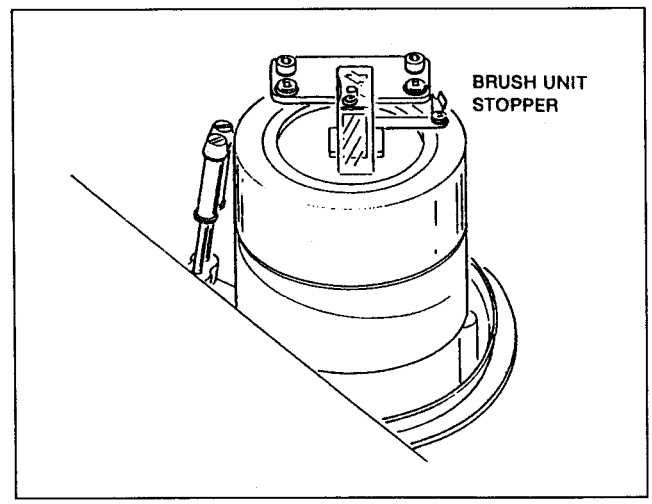

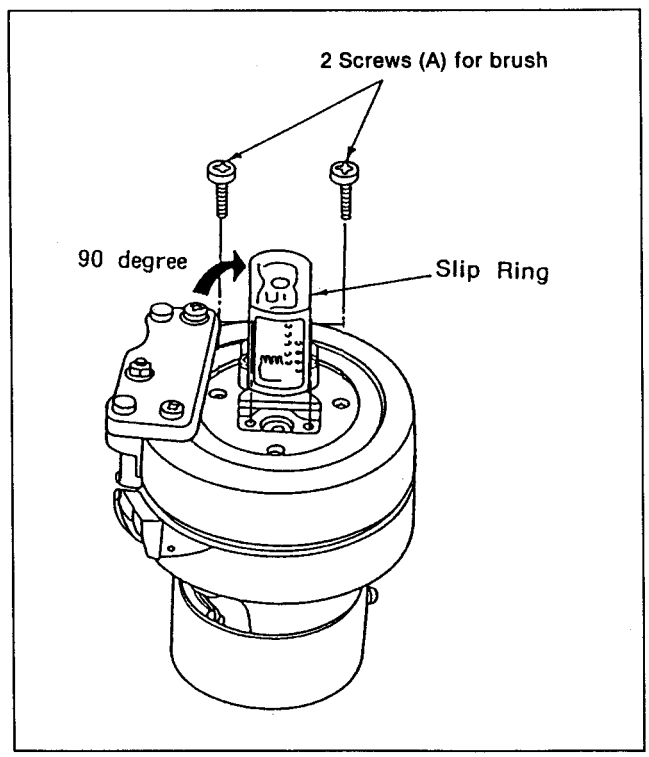

Fig. 9

4. REMOVE THE UPPER DRUM

Before taking off the upper drum, mark "A" area in order to put it back to the original position easily as shown in Figure.

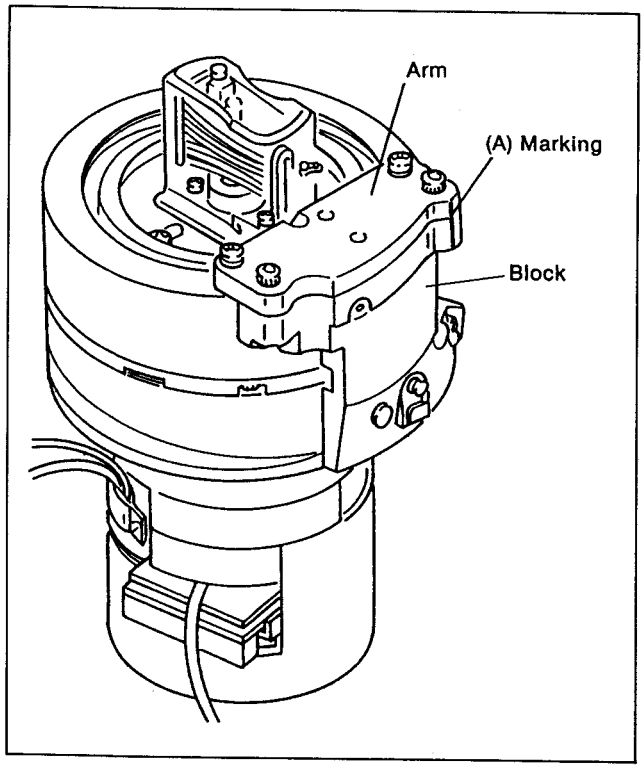

Fig. 10

Unscrew the two hex screws on the upper drum by torque wrench B (Fig. 12).
Unscrew the one hex screw on the back side of the upper drum by torque wrench A, the torque wrench A must select the rotation direction by the selector and it is necessary to attach the torque wrench adaptor.
Remove the Upper Drum unit.

Note: To prevent damage of the edge of upper drum, place upper drum up side down on work surface.

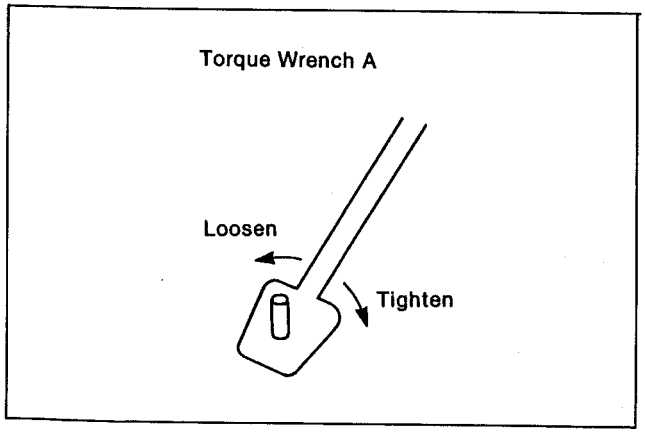

Fig. 11

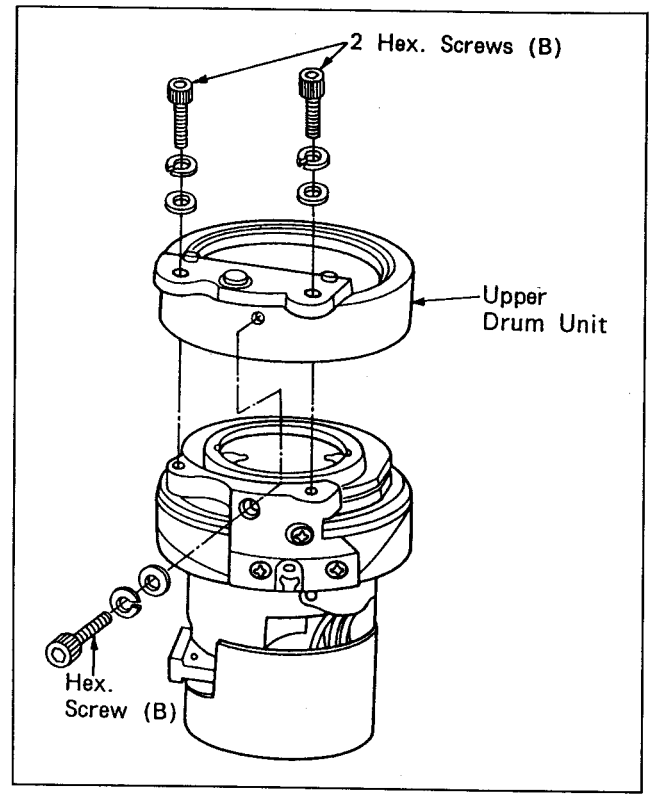

Fig. 12

5. REMOVE THE CENTER DRUM

Unscrew the two screw of the Center Drum and remove the Center Drum.
When replacing the Center Drum, it has two direction, so the correct direction of the Center Drum head A and B must be remembered.

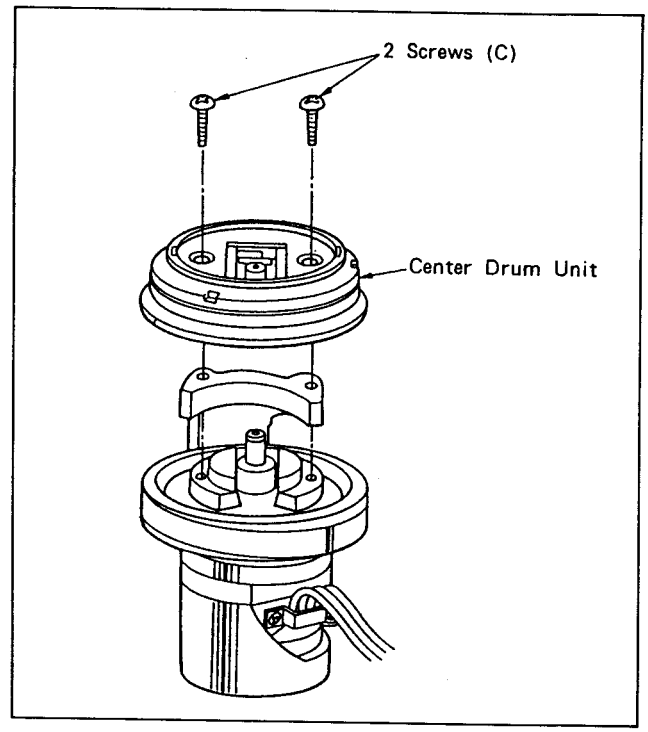

Fig. 13 Center Drum Removal

6. SET THE CENTER DRUM

Clean the tape path of the Lower Drum unit (A, B and C portions).
Check where the head chips are located and pick up the Center Drum so that your fingers never touch the head chips.
Set the Center Drum as same direction on the Lower Drum so that the head chips never touches at any place of the Lower Drum, and slightly tighten the two screws.

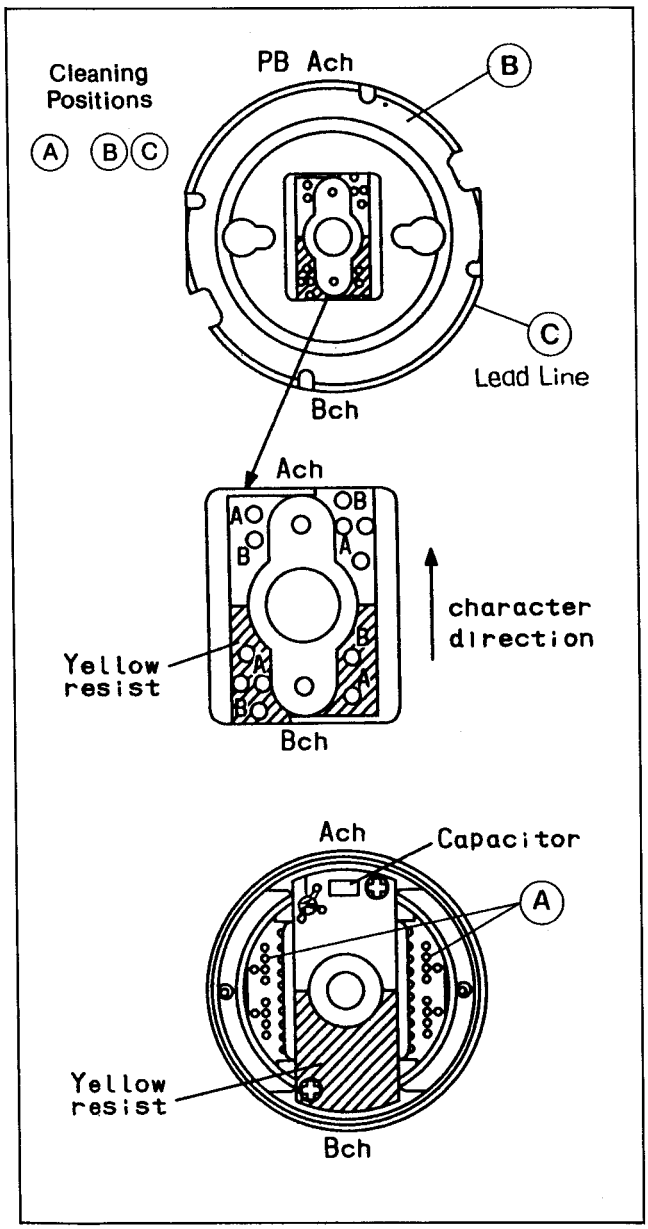

Fig. 14

7. ECCENTRIC ADJUSTMENT

1) Drum Replacement Tool Setup --- VFK0737B
The Drum Replacement tool has two functions, one is center drum eccentric adjustment and the other is head chip protrusion measurement.
Therefore it is necessary to select these functions.
To select the functions there are two set up portions, one is height of the dial meter and the other is head contact portion angle.
The dial meter height is changed by turning the attachment shaft. For the eccentric adjustment the dial meter is in the higher position because the measurement portion must not touch the heads and must touch the road which is just above the head chips. For the head chip protrusion measurement, the measurement pick portion must touch the head chips, so the dial meter must be lower position as shown in Figure 15.

The other setup portion of this tool is head contact portion angle. For the eccentric adjustment the head contact is horizontal to run smoothly on the surface of the center drum and for the protrusion measurement the head contact is vertical to cross the head chips. The angle can be changed by finger, but the pick tool is useful to change this contact portion easily.

2) Set the attachment shaft is upper portion by turning the center screw clockwise.

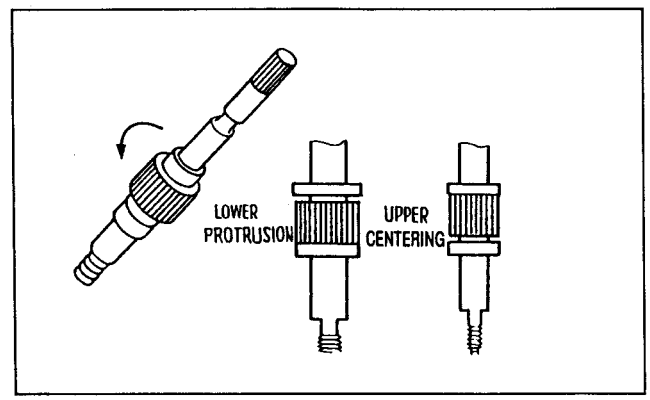

Fig. 15 Attachment Shaft

(3) Set the head contact portion to the horizontal position.

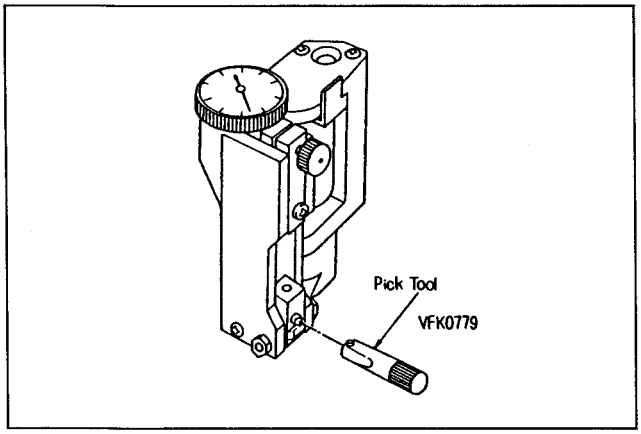

Fig. 16 Pick Tool

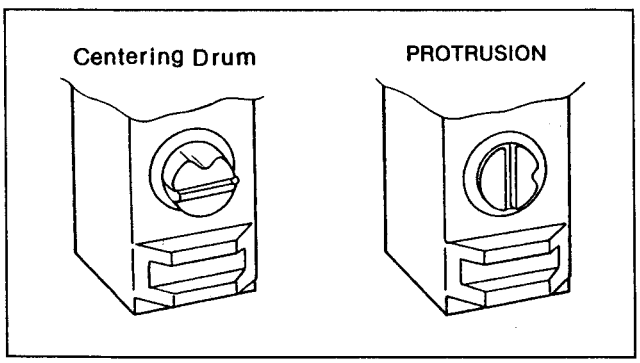

Fig. 17 Pick Tool

(4) Install the attachment shaft at mechanism chassis.

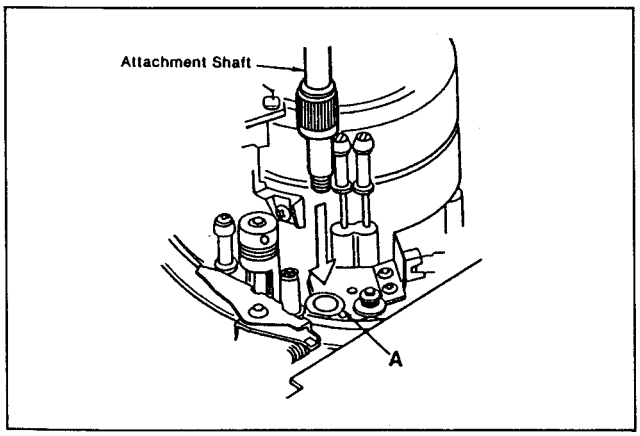

Fig. 18 Attachment Shaft

(5) Set the main unit of the drum replacement tool at the attachment shaft.

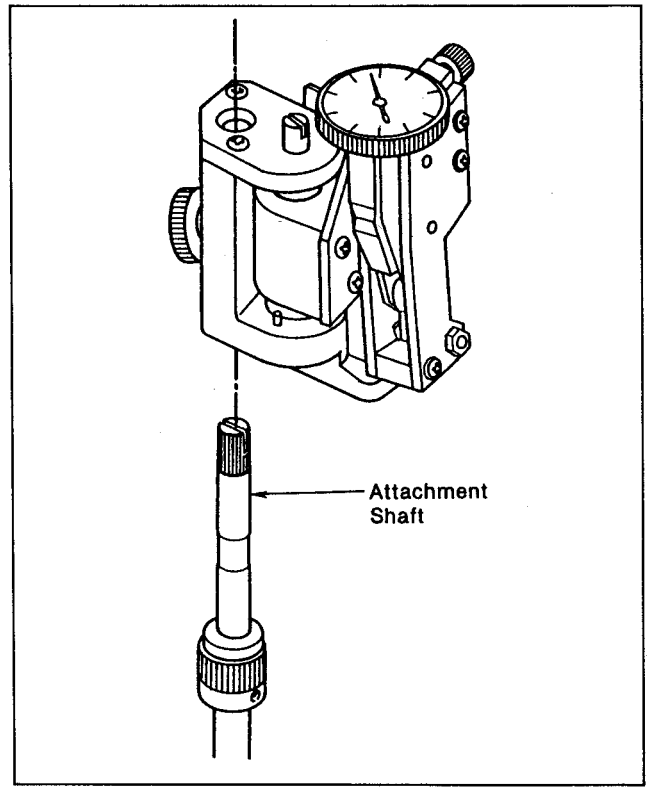

Fig. 19 Center Drum Replacement Tool

(6) Confirm that the lever of center drum replacement tool is locked and install it to attachment shaft.

(7) Set the attachment plate to touch the lower drum, and fix the knob by rotating the screw.

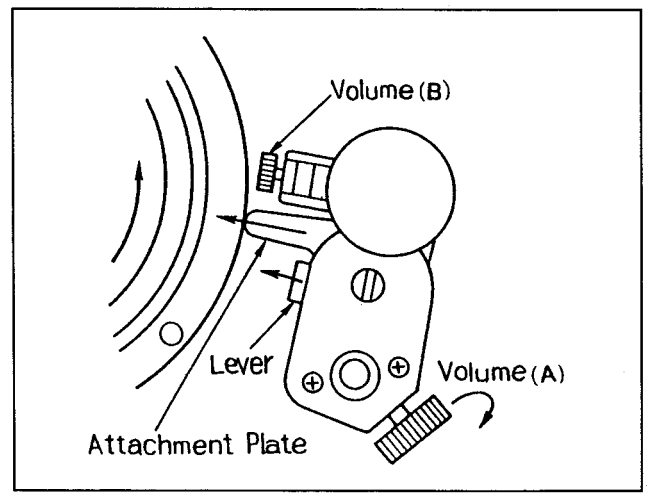

Fig. 20 Attachment Tool

(8) Set the dial gauge to zero position.
Adjust the knob of the center drum replacement tool of the head adjustment place so that the pick up point touches the drum and increase to 60 um indication.

(9) Rotate the outer ring of the dial gauge to set the meter indication to zero. Rotate the center drum if it is not concentric with its axis of rotation the meter will swing back and forth, indicating the amount of error. The maximum allowable tolerance is within +/- 1 um.

(10) If it is out of specification, adjust the position of the center drum by tapping lightly with the plastic handle of a screwdriver on the side of the drum opposite from the point of measurement. When the eccentricity is within +/- 1 um, gently tighten the 2 screws. Check eccentricity to make sure it is within specification. If it is out, repeat this procedure.

(11) Tighten the 2 screws of the center drum securely with torque wrench and check eccentricity again. If it is within ± 1 um pull the drum replacement tool away from the drum.

(12) Clean the block and upper drum of attachment surfaces (A,B and C portions) as shown in Figure 23. Remove the drum replacement tool and attachment shaft.

(13) Reinstall the upper drum and tighten loosely the 2 hex screws of top of the arm and block using the torque wrench B.

(14) Tighten loosely the hex screw which is located at the back of the block (screw E) using the torque wrench.
Confirm that there is a small allowance for upper drum movement.

(15) Match the marking on arm and block and tighten the hex screw (E) which is located at back side of the lower drum by using the torque wrench A to 6kg. And tighten the 2 hex screws (D) of top of it by using the torque wrench to 8kg.

If not, upper drum adjustment is required as follows. (as if change the upper drum)

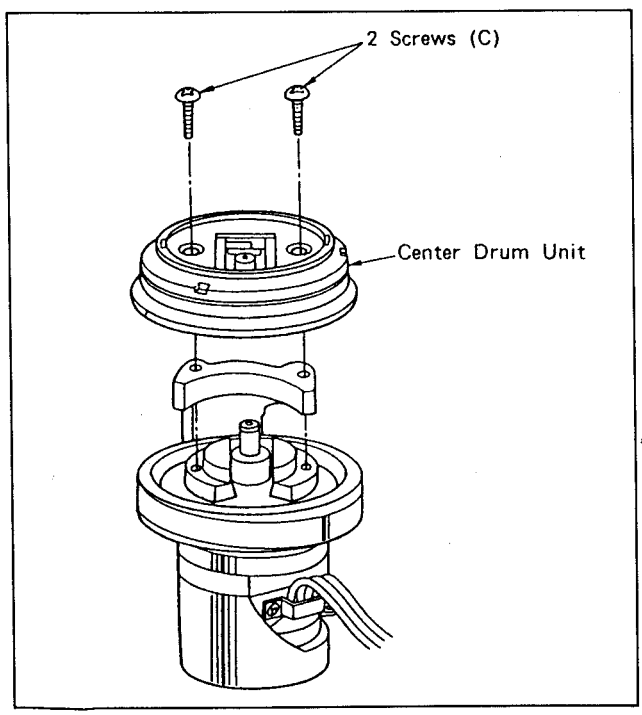

Fig. 21 Center Drum

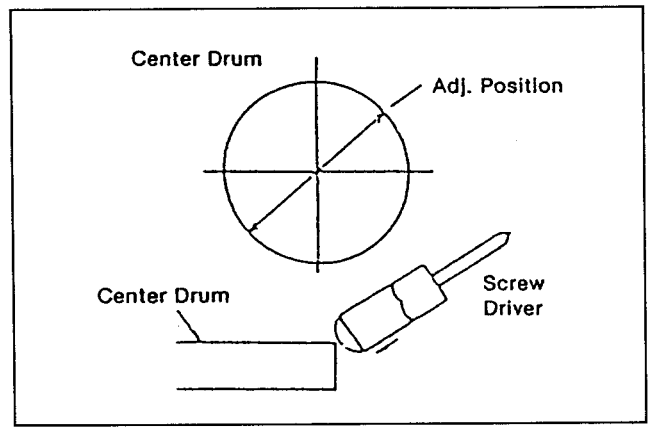

Fig. 22 Adjustment Position

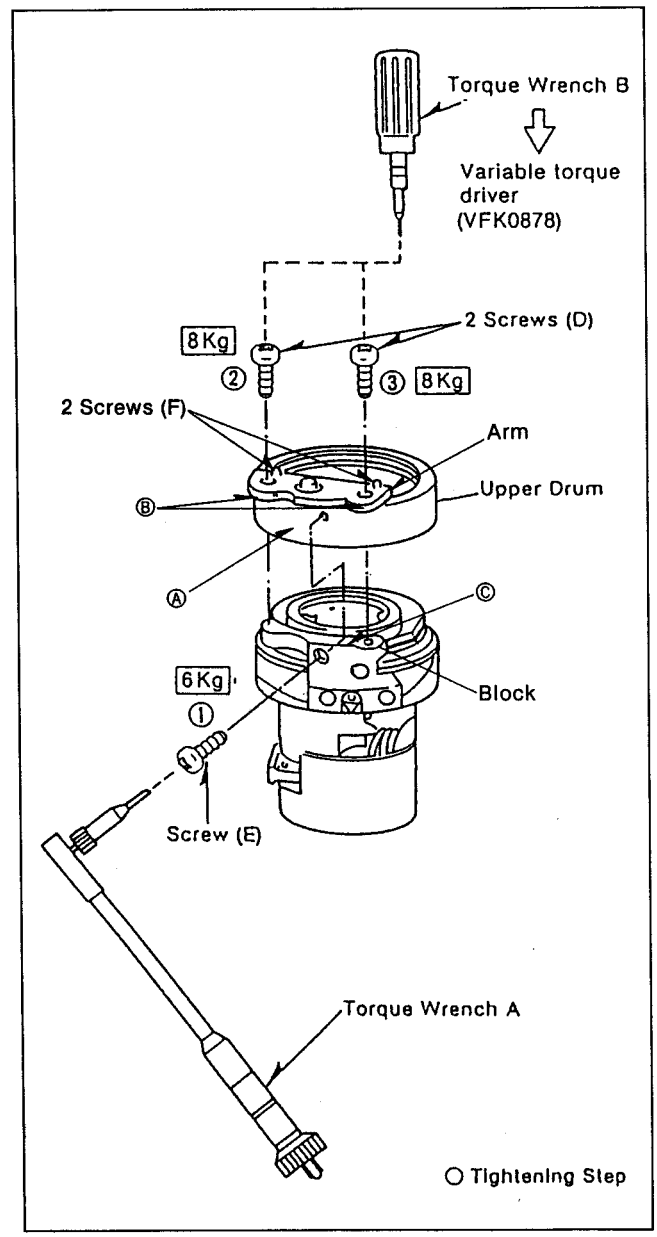

Fig. 23 Install Upper Drum

UPPER DRUM INSTALLATION and ADJUSTMENT

(1) Tighten the hex screw (E) matching the arm and block by using the torque wrench A to 6kg.
(2) Loosen the 2 screws (F) until release the spring washer, and match the screw (D) and screw (D)'s hole moving the upper drum to left and right by hand.
(3) Tighten the 2 screws (D) matching the arm and block by using the torque wrench to 8kg.
(4) Tighten the 2 screws (F) by using the torque wrench to 6kg.
(5) Erase the marking (A) by using the cleaning cloth.

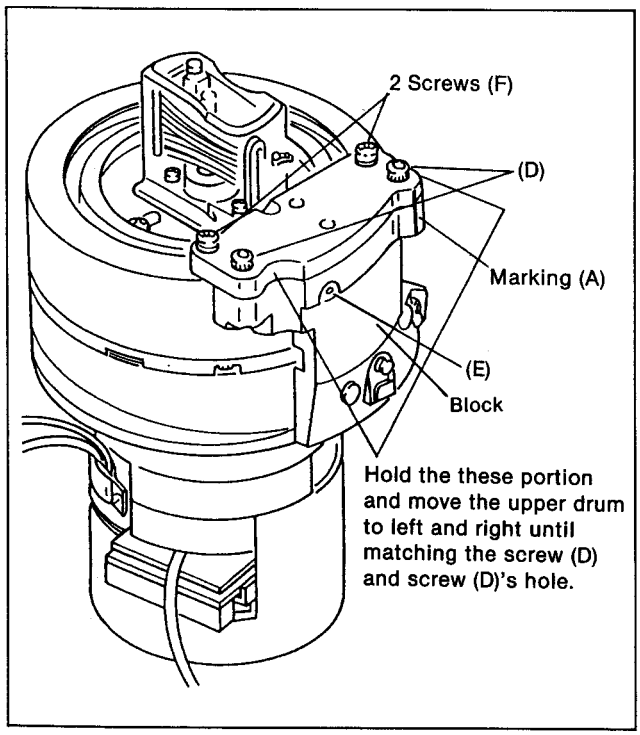

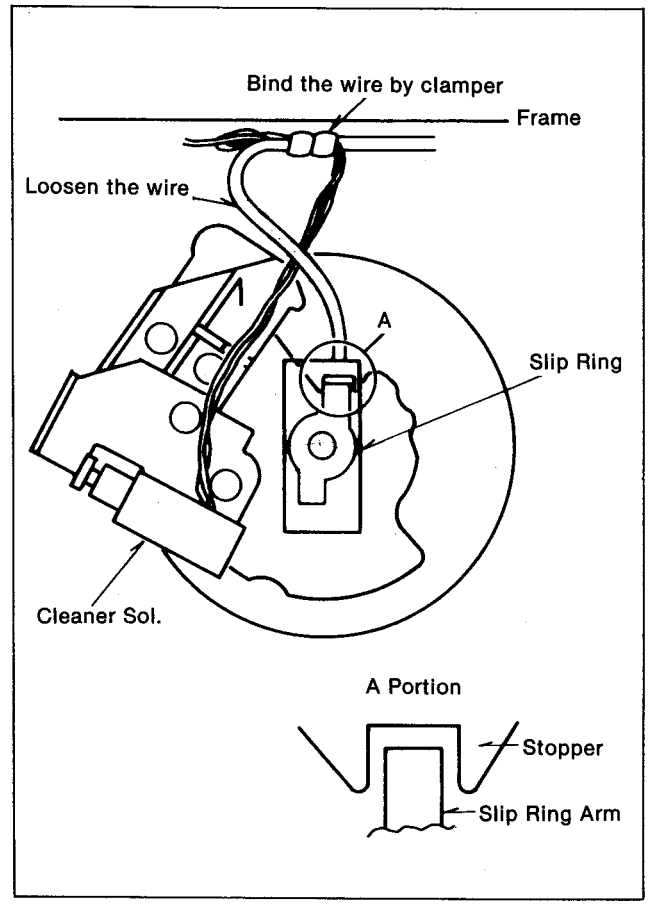

16) Reinstall the slip ring and tighten the 2 screws.

17) Reinstall the cleaner roller unit to the original position.

Note: After replaced center drum, please refer to Technical information. (Subject: CENTER DRUM REPLACEMENT and ADJUSTMENT).

18) After install the slip ring and cleaner roller, bind the wire using clamper as follows.

* Make loosen the wire when it is binded.

6-3. DRUM UNIT REPLACEMENT

6-3-1. Replacement

(Removal)

1. Remove the top panel (Refer to item 2-1).
2. Disconnect the P504 and P511 as shown in Figure 6-3-1.

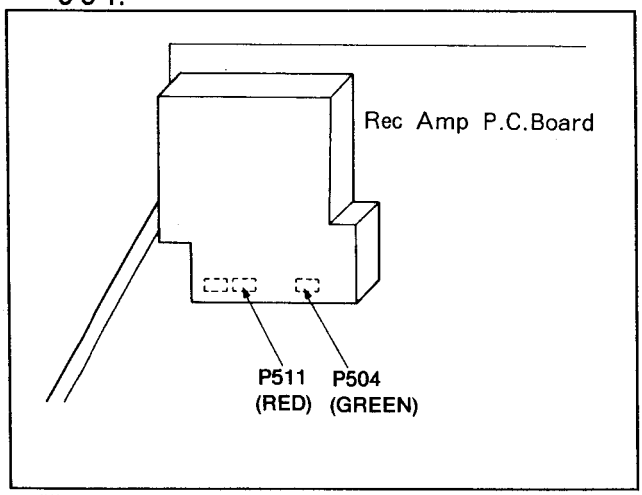

Fig. 6-3-1 Drum Connector P504, P511 Removal

3. Disconnect the connector P523 shown in Figure 6-3-2.

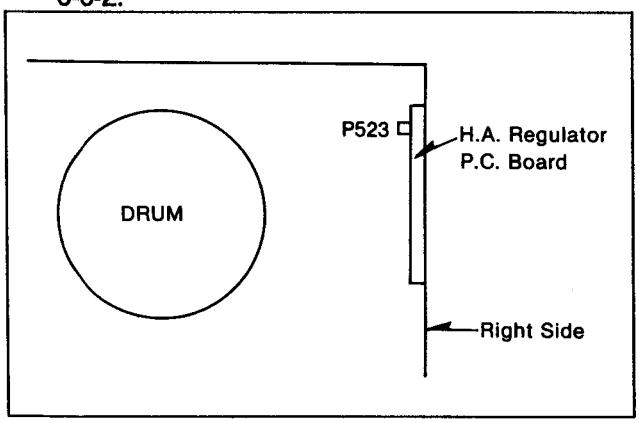

Fig. 6-3-2 Drum Connector P523

4. Unscrew the 2 screws (B) and remove the Cleaner Roller as shown in Figure below.

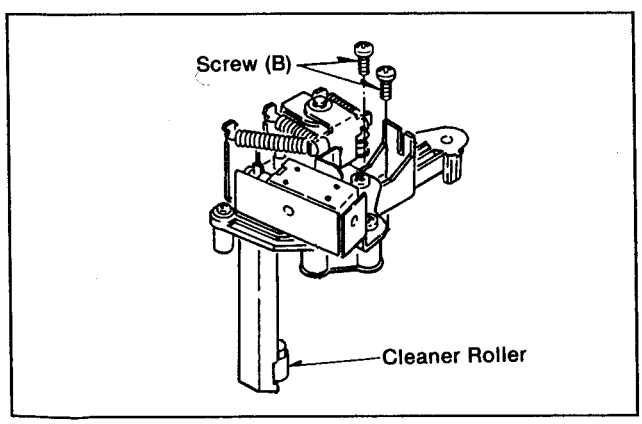

5. Remove the bottom panel (Refer to item 2-3).
6. Remove the L P.C.Boards (L1 to L4).
7. Unscrew the screw (A) and remove the bottom cover as shown below.

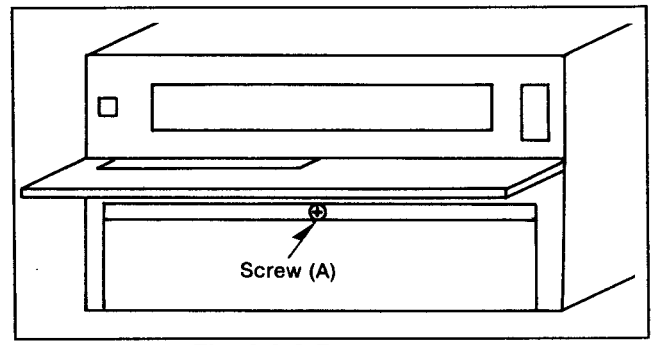

Fig. 6-3-3 Bottom cover

8. Disconnect the 3 connectors (P531, P532, P538) on the Buffer amp P.C.Board and a connector (P561) on the Mech interface P.C.Board.

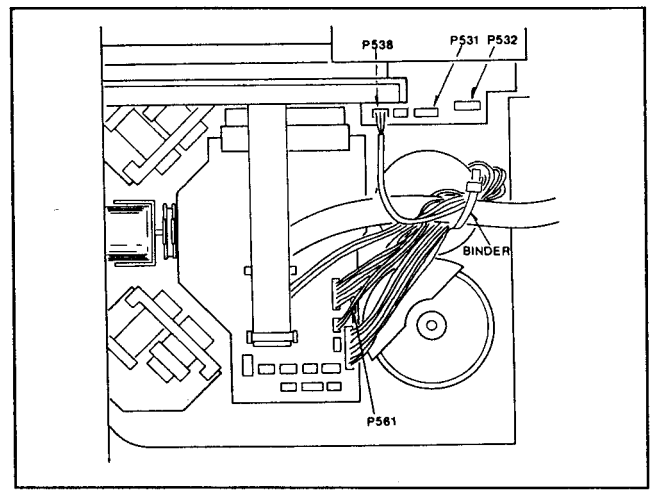

Fig. 6-3-4 Drum Unit Removal

9. Disconnect the 2 connectors on the drum unit as shown below.
10. Unscrew the 3 screws (B) and remove the Drum Unit as shown in Figure 6-3-4.

Note: After replaced center drum, please refer to Technical Information. (Subject: CENTER DRUM REPLACEMENT and ADJUSTMENT).

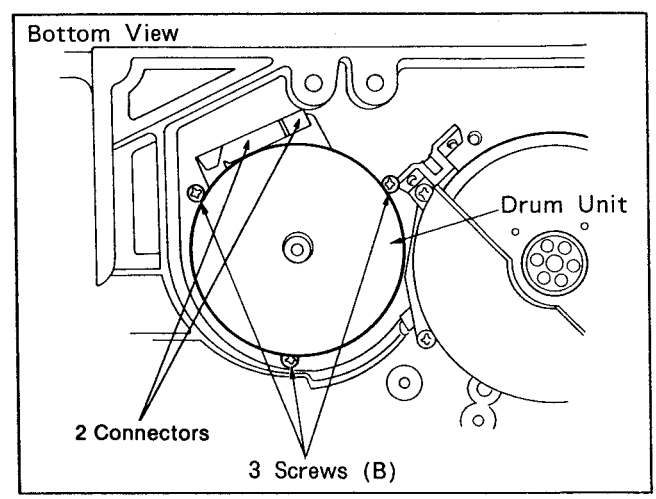

DRUM ELECTRICAL ADJUSTMENT FLOWCHART

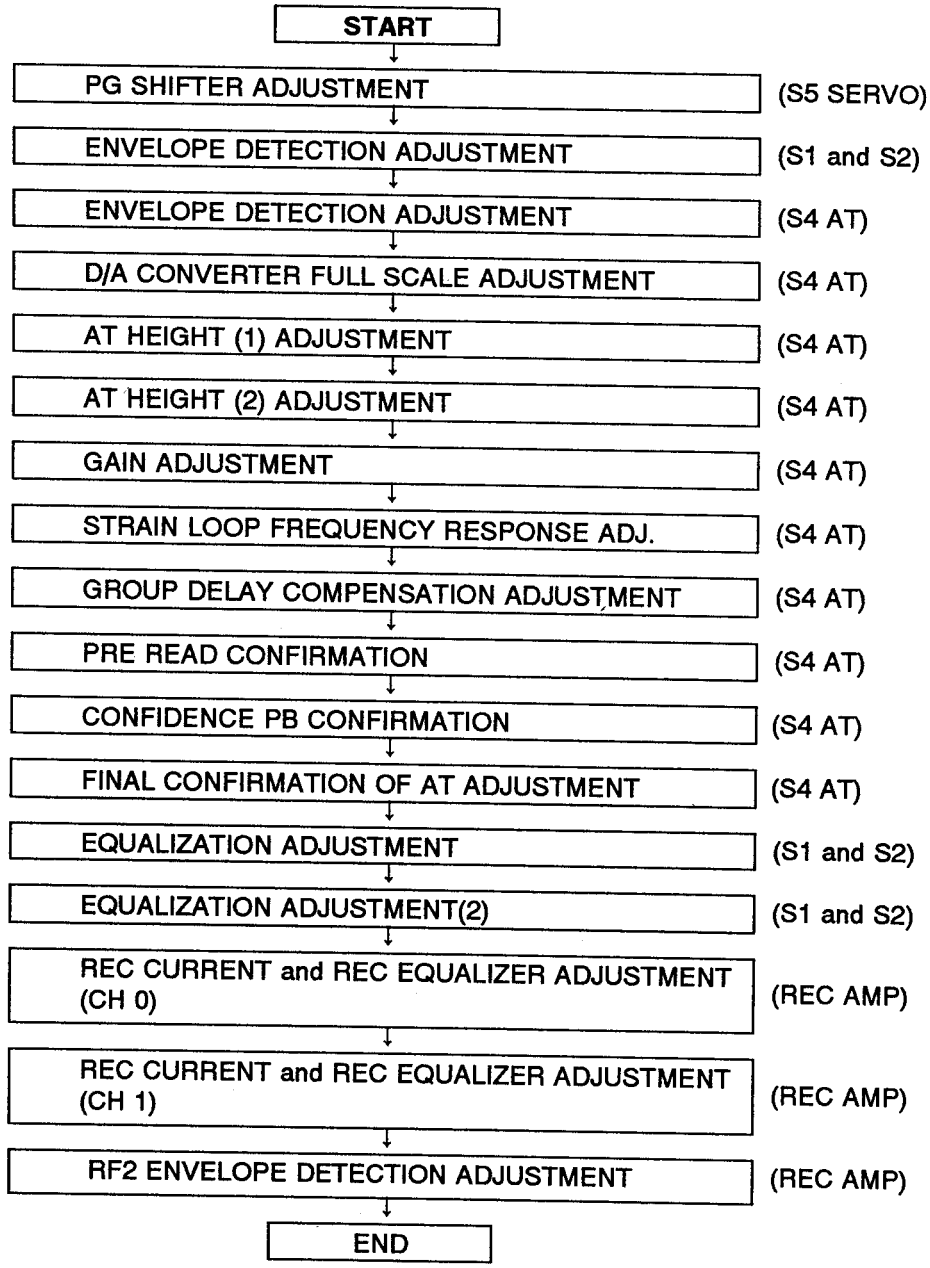

6-4. S-REEL BASE UNIT/T-REEL BASE UNIT REPLACEMENT AND ADJUSTMENT

6-4-1. Replacement

(Removal)

1. Remove the top panel (Refer to item 2-1).
2. Remove the front loading unit (Refer to item 2-3).
3. Remove the bottom panel (Refer to item 2-2).
4. Remove the L boards from L1 to L4.
5. Unscrew the 4 screws (A) and disconnect the 4 Connectors (B), then remove the 4 Cables as shown in Figure 6-4-1.
6. Unscrew 3 screws (B) and remove the Photo P.C.B. Angle as shown in Figure 6-4-2.
7. Turn the Worm Motor Belt so that the Rail Holders (A) and (B) are appear as shown in Figure 6-4-2 and 6-4-3.
8. Unscrew the 8 screws (C) and remove the Rail Holders.
9. Through out the S-Reel Base and T-Reel Base from the Rail A and B.
10. Remove the S-Brake Unit, T-Brake Unit, S-Brake Solenoid and T-Brake Solenoid following the items 6-5 and 6-6.

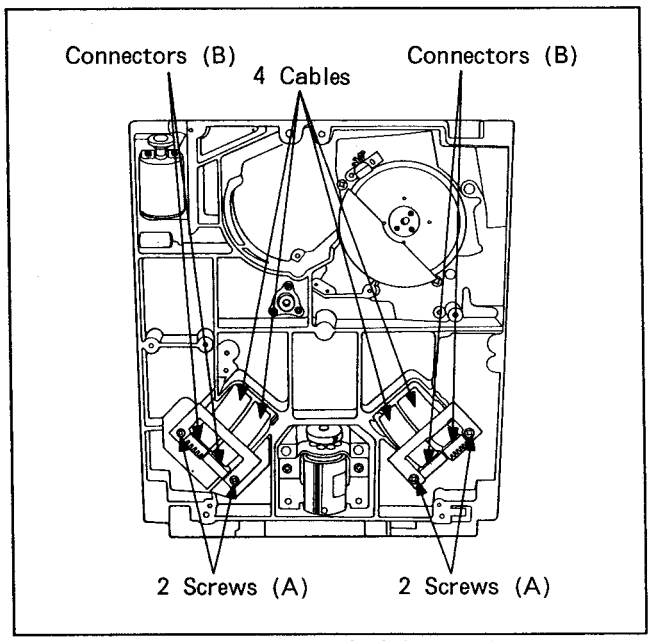

Fig. 6-4-1 Removal of the Cables

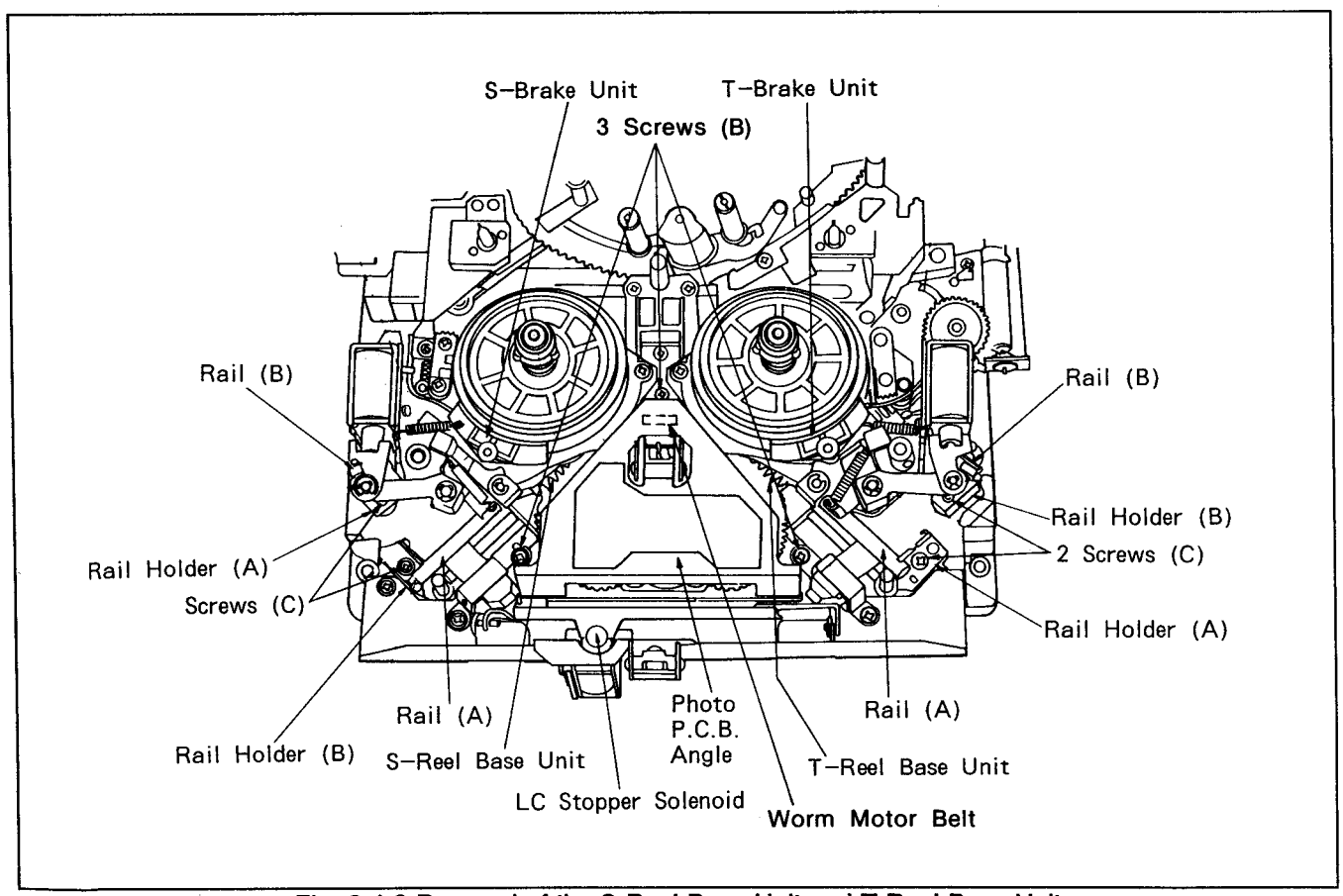

Fig. 6-4-2 Removal of the S-Reel Base Unit and T-Reel Base Unit (Small Cassette Position)

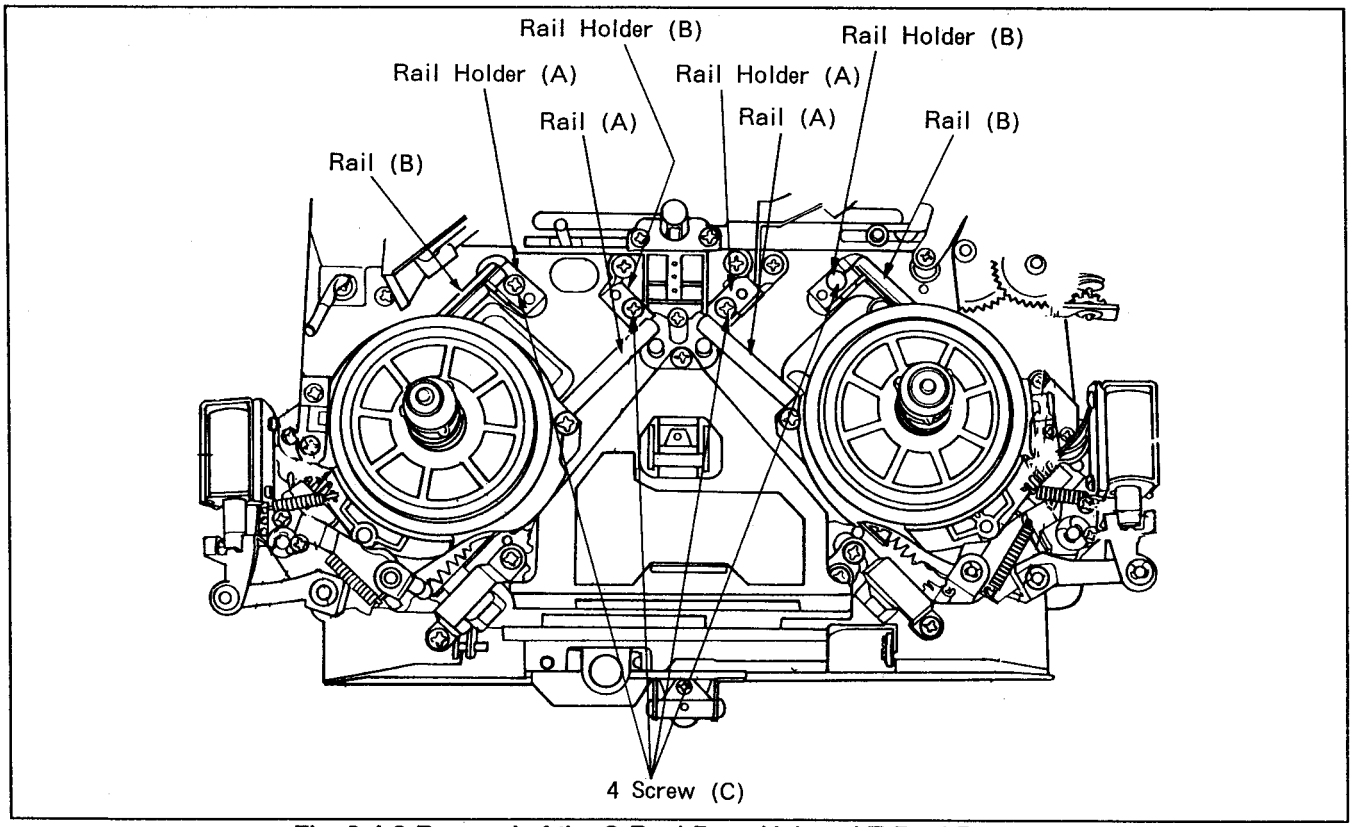

Fig. 6-4-3 Removal of the S-Reel Base Unit and T-Reel Base unit (Large Cassette Position)

6-4-2. Reel Base Phase Adjustment

1. Install the S-Reel Base and T-Reel Base in the Small Cassette position, then of the Reel Base Drive Gears S-Reel Base and T-Reel Base should be as shown in Figure 6-4-2.

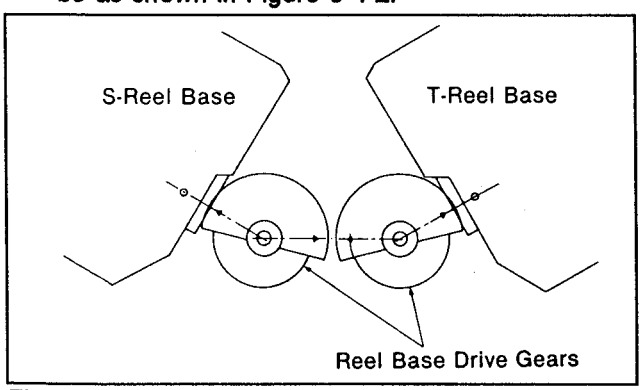

Fig. 6-4-4 Phase of the Reel Base Drive Gear and S-Reel Base or T-Reel Base

(Installation)

1. Install the S-Brake Unit and S-Brake Solenoid to the S-Reel Base, and install the T-Brake Unit and T-Brake Solenoid to the T-Reel Base in reverse order, following the steps on items 6-5 and 6-6.
2. Install the S-Reel Base and T-Reel Base, performing the above adjustment, in the reverse order of the previous steps.

6-4-3. Cassette Supporter Height Adjustment

1. Remove the cassette carriage.
2. Set the Mech Neutral Adjustment Plate on the reel table correctly as shown in Figure 6-4-5.
3. Loosen the hex screw so that the cassette support is contact with the Mech Neutral Plate.
4. Tighten the hex screw.

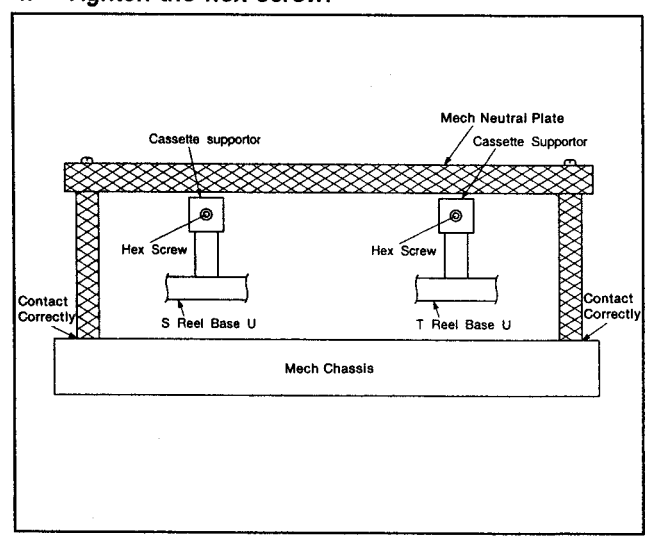

Fig. 6-4-5

6-5. SUPPLY BRAKE UNIT AND TAKE UP BRAKE UNIT REPLACEMENT

(Removal)

1. Remove the top panel (Refer to item 2-1).
2. Remove the front loading unit (Refer to item 2-3).
3. Remove the 4 E-Rings, 6 Washers and 2 Brake Spring (2).
4. Remove the 2 Brake Interlock Angle and pull out the S-Brake Unit and the T-Brake Unit as shown in Figure 6-5-1.

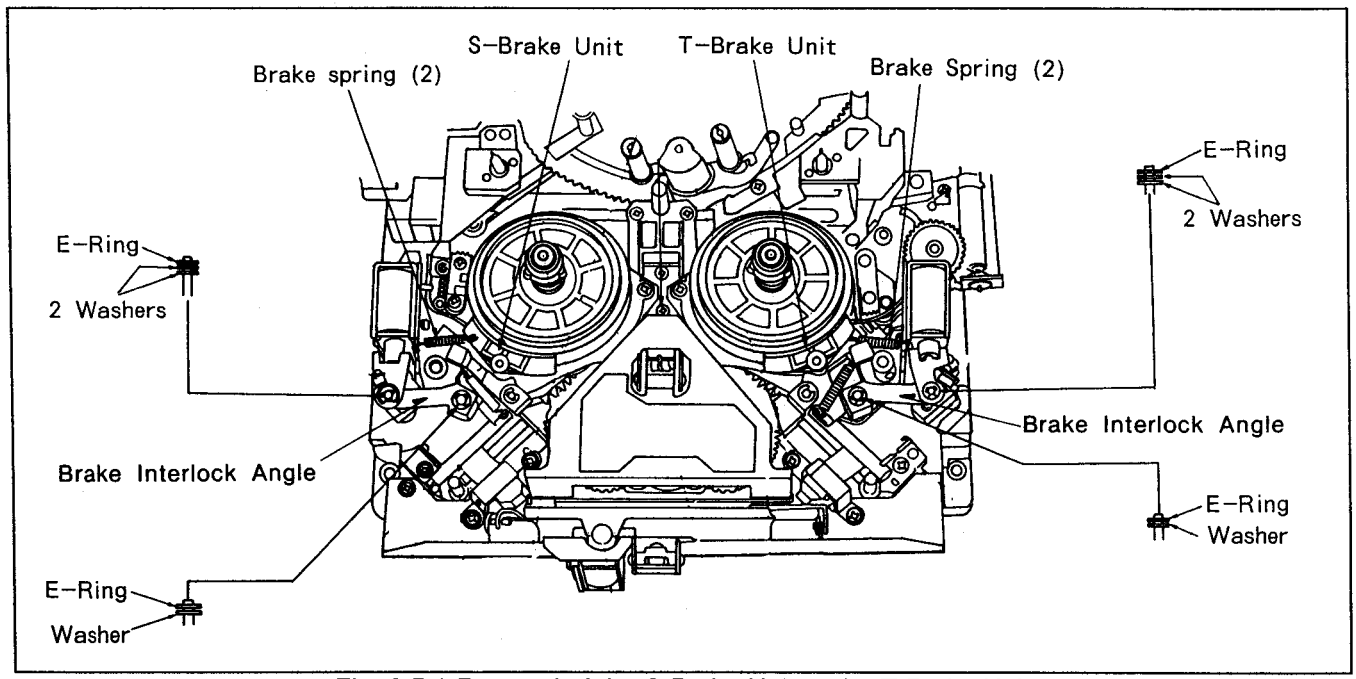

Fig. 6-5-1 Removal of the S-Brake Unit or the T-Brake Unit

(Installation)

1. Install the S-Brake Unit and the T-Brake Unit following the previous steps in reverse order.
2. After installation, position adjustment should be preformed as follows.

(Adjustment)

1. When moving the spring pin in each brake solenoid plunger in direction (C) and (D), observe the clearance (E) between each brake pad and it's turntable. This clearance should be between 1mm.
2. If not, loosen the 2 screws (A) supply side and take up side and adjust the brake solenoid so that the clearance (E) is within specification. And tighten the 2 screws (A).
3. Observe the clearance (F) as shown in figure and make sure that it is within 0.09mm to 0.13mm.
4. If not, loosen the 2 screws (B) and clearance (F) is within specification. And tighten the 2 screws (B).

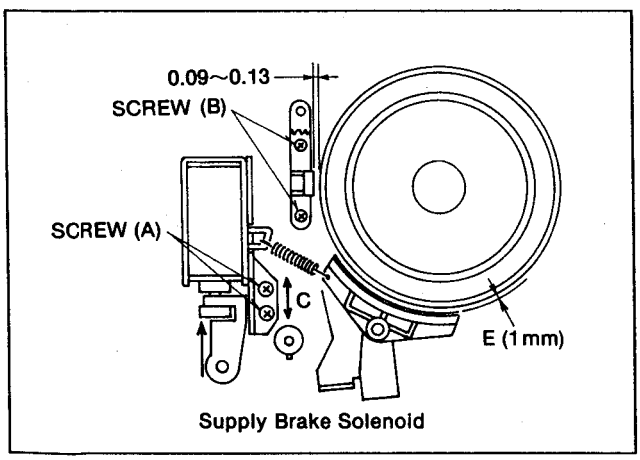

Supply Brake Solenoid

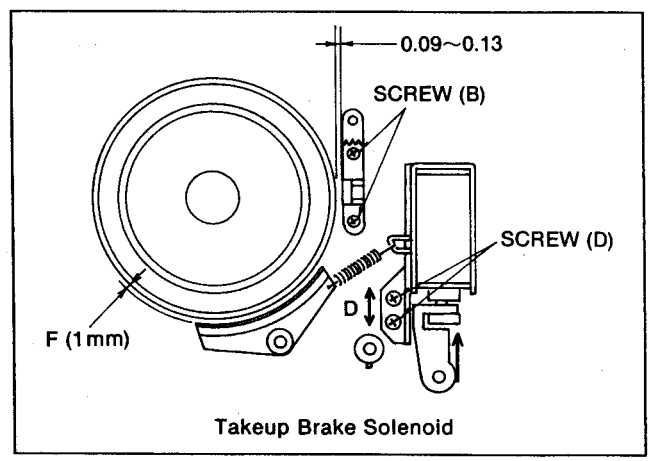

Takeup Brake Solenoid

6-6. SUPPLY BRAKE SOLENOID AND TAKE UP BRAKE SOLENOID REPLACEMENT

(Removal)

1. Remove the top panel (Refer to item 2-1).
2. Remove the front loading unit (Refer to item 2-3).
3. Remove the 6 soldering portions, 2 Brake Spring (2) and 4 screws (A), then pull out the S-Brake Solenoid and the T-Brake Solenoid as shown in Figure 6-6-1.

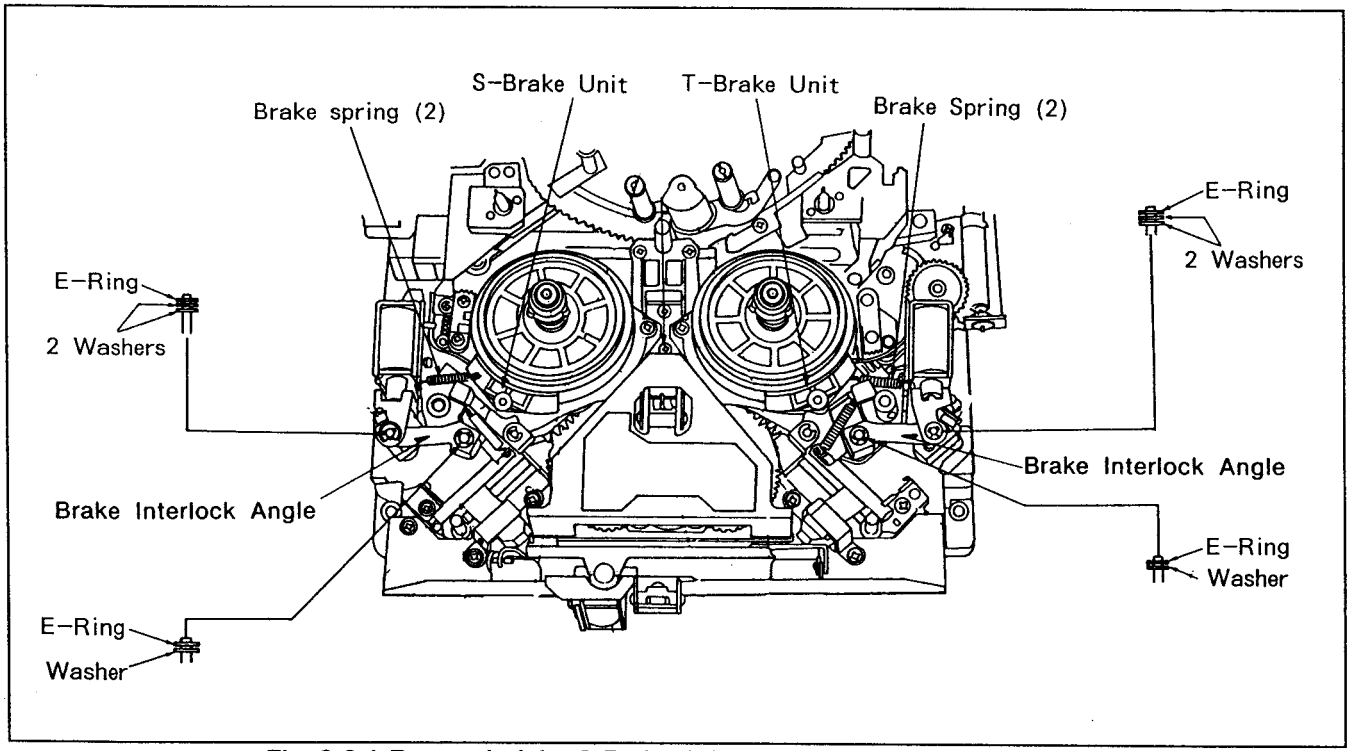

Fig. 6-6-1 Removal of the S-Brake Solenoid and the T-Brake Solenoid

(Installation)

1. Install the S-Brake Solenoid and T-Brake Solenoid following the previous steps in reverse order.
2. After installation, position adjustment should be performed as follows.

(Adjustment)

1. When moving the spring pin in each brake solenoid planger in direction (C) and (D), observe the clearance (E) between each brake pad and it's turntable. This clearance should be between 1mm.
2. If not, loosen the 2 screws (A) supply side and take up side and adjust the brake solenoid so that the clearance (E) is within specification. And tighten the 2 screws (A).
3. Observe the clearance (F) as shown in figure and make sure thet it is within 0.09mm to 0.13mm.
4. If not, loosen the 2 screws (B) and clearance (F) is within specification. And tighten the 2 screws (B).

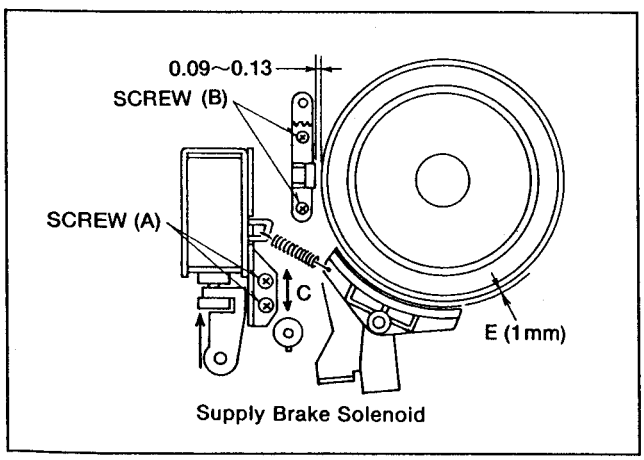

Supply Brake Solenoid

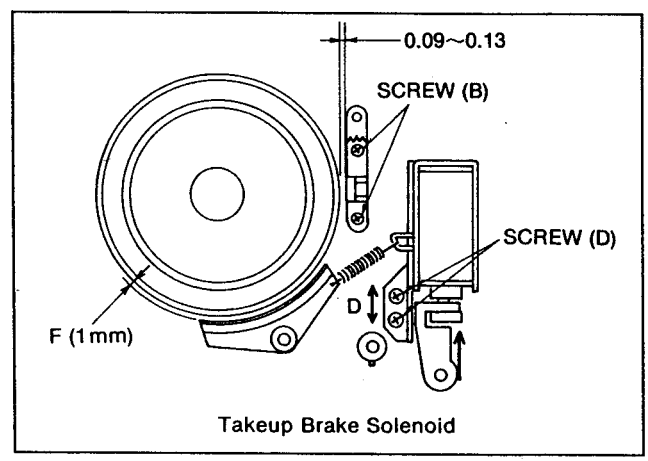

Takeup Brake Solenoid

6-7. PINCH ARM UNIT REPLACEMENT

(Removal)

1. Turn the Sub Loading Motor so that the Loading Arm Unit is loading condition and pushing hold the Ring Drive Gear, then turn the loading Ring to the position as shown in Figure 6-7-1.

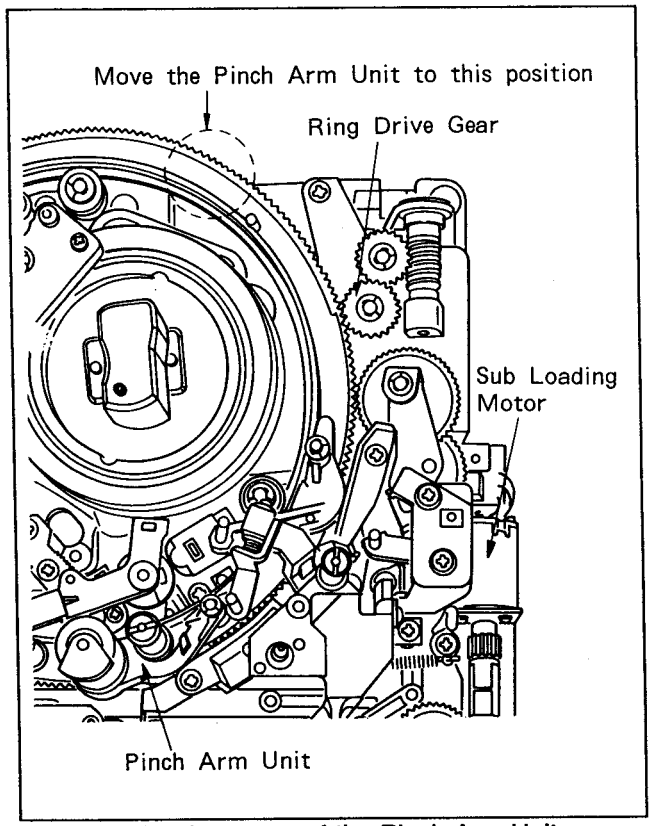

Fig. 6-7-1 Replacement of the Pinch Arm Unit

2. Remove the E-Ring and Washer and pull out the Pinch Arm Unit as shown in Figure 6-7-2.

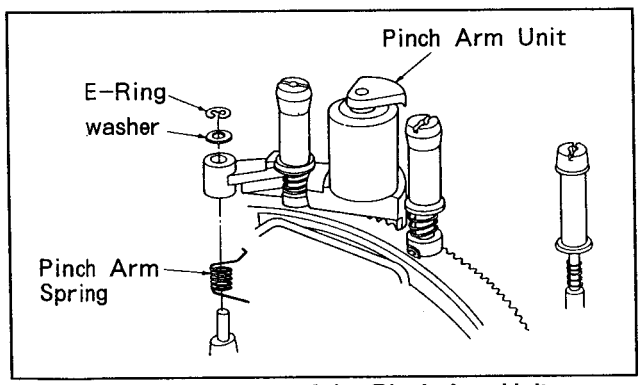

Fig. 6-7-2 Replacement of the Pinch Arm Unit

(Installation)

1. Install the Pinch Arm Unit following the previous steps in reverse order.

6-8. A/C HEAD REPLACEMENT

6-8-1. Replacement

* Tools required:
Nut Driver (7m/m)(VFK0676)
Hex. Wrench (VFK0326)

(Removal)

1. Remove the nut (A), loosen the hex-screw (B), hang off the height adjustment spring and then remove A/C Head assembly as shown in Figure 6-8-1.

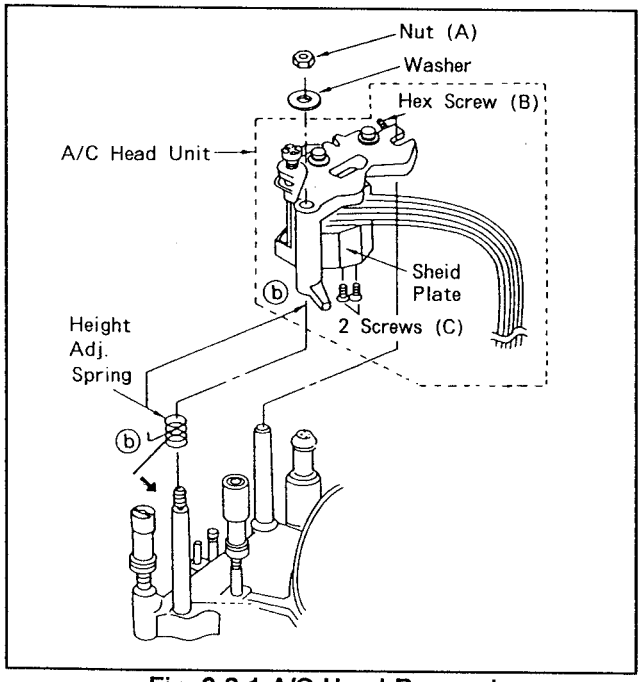

Fig. 6-8-1 A/C Head Removal

2. Remove the shield plate by removing 2 screws (C) as shown in Figure 6-8-1 and disconnect the connectors P1, 3, 4, 5 which is on Cue Audio P.C.Board (S3).
3. Unscrew head wires. (When unsolder head wires, do not unsolder all at the same time)

(Installation)
1. Confirm that the head and head mounting plate is set to be approximately 1 m/m with the Plate parallel as shown in Figure 6-8-2. If it is not, adjust the each screws to these plate parallel.
2. Solder the lead wires of the new A/C head.
3. Reinstall the shield plate onto the A/C head assembly.
4. Install the new A/C head assembly.
5. Hang on the height adjustment spring and, tighten the nut (A) as shown in Figure 6-8-1 and 6-8-4.
6. Clean the surface of the A/C head.

Note: After the installation, Mechanical and Electrical Adjustment should be performed Hex screw (B) is kept loose until finish the A/C Head height adjustment.

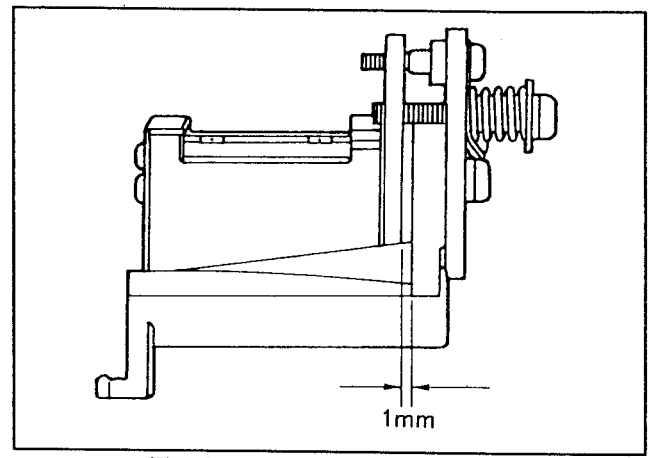

Fig. 6-8-2 A/C Head Assembly

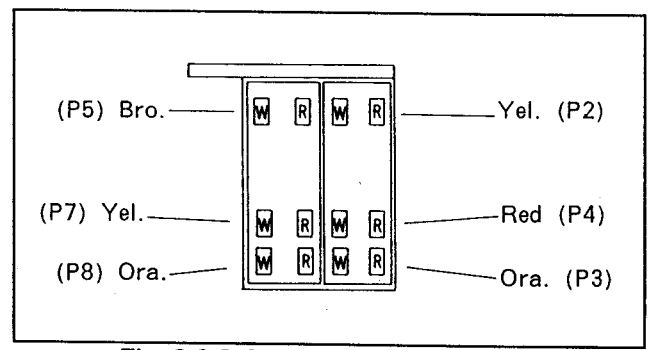

Fig. 6-8-3 Connectors on A/C Head

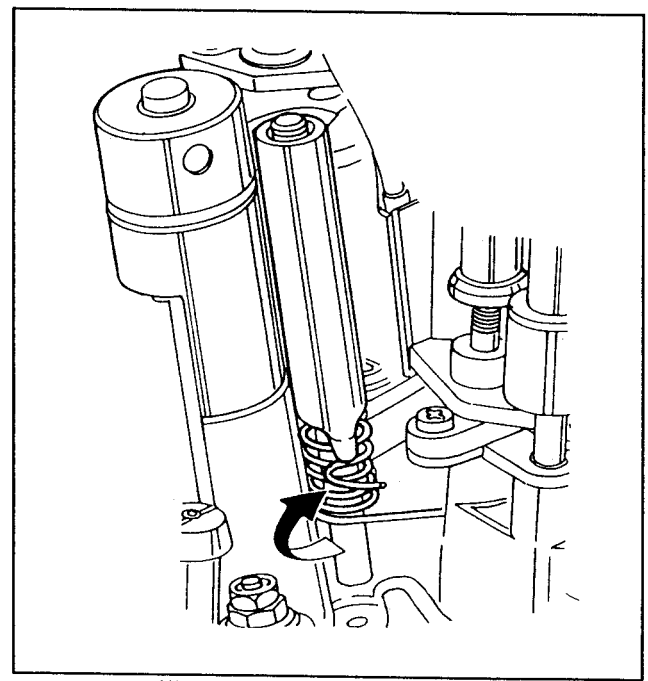

Fig. 6-8-4 Adjustment Spring

A/C HEAD ELECTRICAL ADJUSTMENT FLOWCHART

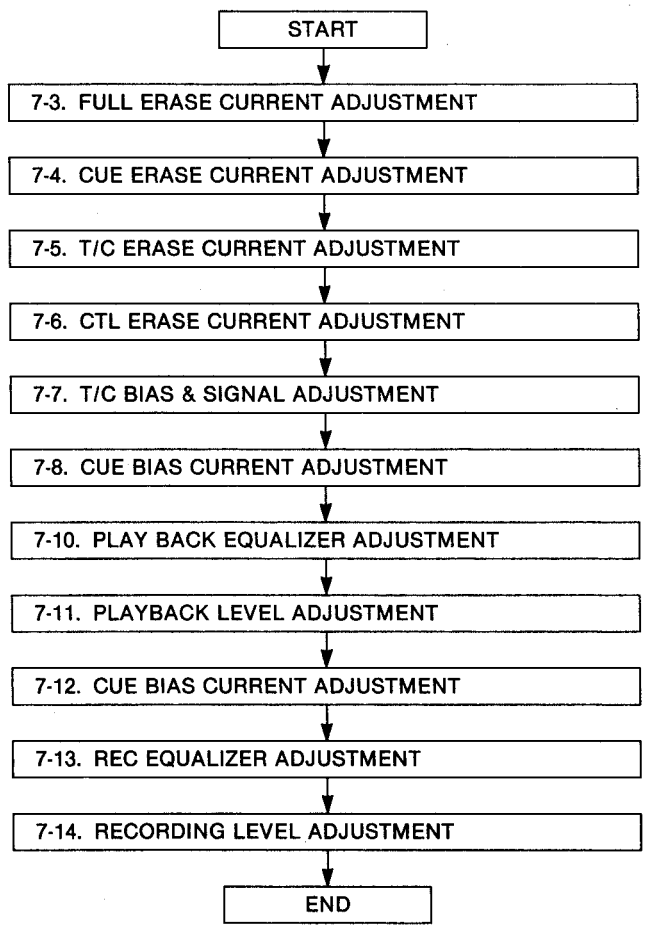

6-9. FULL ERASE HEAD REPLACEMENTAND ADJUSTMENT

6-9-1. Replacement

(Removal)
1. Remove the top panel.
2. Unsolder 2 leads on the erase head as shown in figure 6-9-1.
3. Remove the 2 screws (A) and remove the S Base (1) Unit. (Fig. 6-9-1)
4. Remove the screw (B) and remove the head.

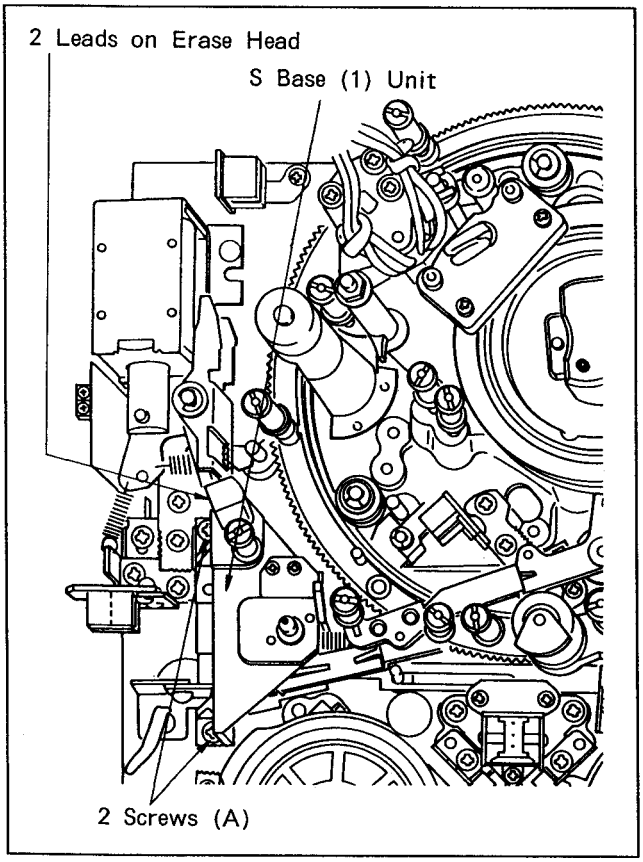

Fig. 6-9-1

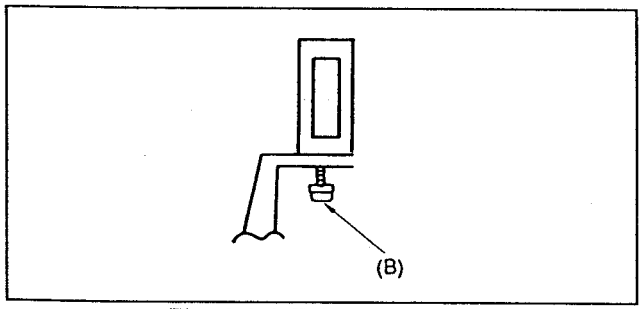

Fig. 6-9-2 Full Erase Head

Installation
1. Follow the previous steps in reverse order.
2. After installing the head, perform the following adjustments.

6-9-2. Adjustment

1. Check and adjustments according to the FULL ERASE CURRENT ADJUSTMENT procedure.

6-10. POST ROLLER UNIT REPLACEMENT

1) POST ROLLER UNIT REPLACEMENT

Note:
When you replace a Post roller unit, install one at a time, and optimize its position.
(Before replacing any more)

(Removal)

1. Remove the front loading unit.
2. Only turn the upper flange counterclockwise and remove the upper flange of the post. (using post driver outer sleeve) Do not loose the hex screw when the upper flange is removed as shown in figure 6-10-1.
3. Remove the post roller unit (B) (Be sure not to lose the post spring (D) as shown in figure 6-10-2.

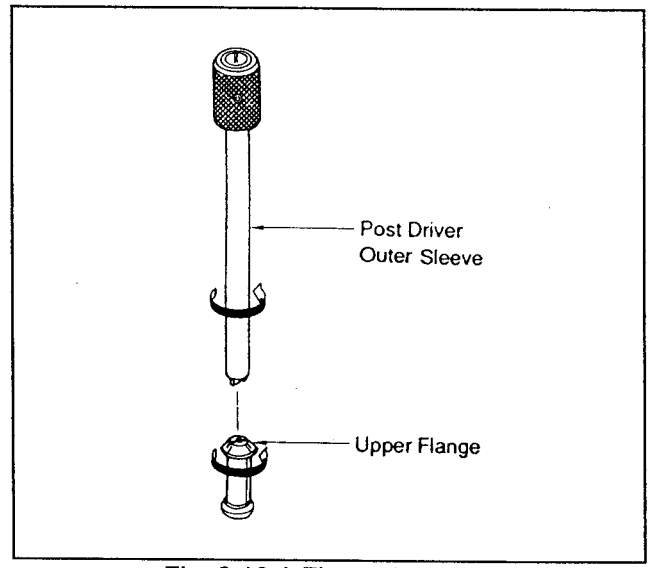

Fig. 6-10-1 Flange Removal

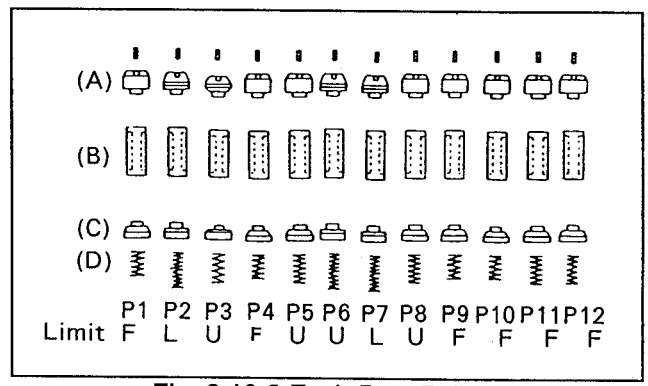

Fig. 6-10-2 Each Post Rollers

6-11. CAPSTAN HOUSING UNIT REPLACEMENT AND ADJUSTMENT

6-11-1. Replacement

(Removal)

1. Remove the Shield Plate and L1, L2, L3, L4 P.C.Board, refer to item 1-4.
2. Remove the bottom panel.
3. Remove the 2 screws (A) and remove the Capstan Motor Cover as shown in figure 6-11-2.

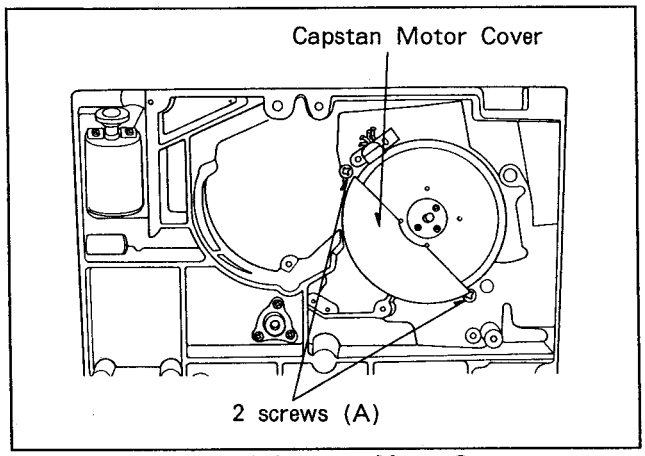

Fig. 6-11-1 Capstan Motor Cover

4. Loosen the Hex, Screws (B) and remove the Capstan Shaft Holder, Washer, Upper Flange and Spacer as shown in figure 6-11-2.
5. Pull out the Capstan Rotor Unit shown in figure 6-11-2.
6. Unscrew the 3 screws (C) and pull off the Capstan Housing Unit and Lower Flange as shown in figure 6-11-2.

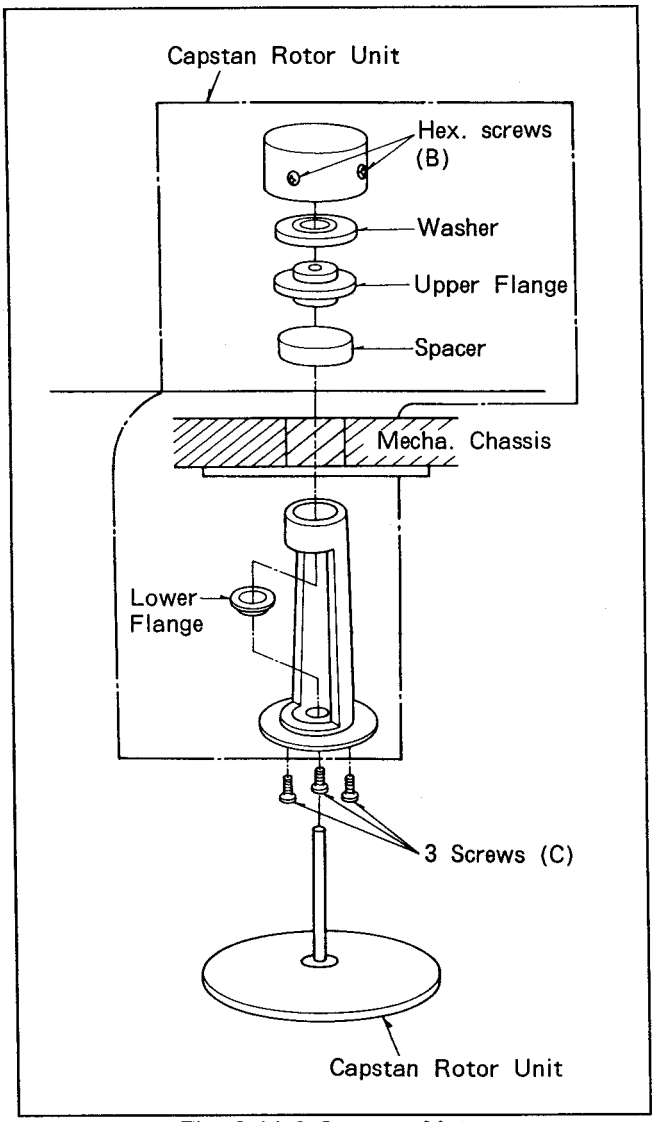

Fig. 6-11-2 Capstan Motor

(Installation)

1. Follow the previous steps in reverse order.

6-11-2. Adjustment

1. Check adjustments according to the TRACKING FIX ADJUSTMENT procedure.

6-12. PINCH SOLENOID AND PINCH PRESS LEVER REPLACEMENT AND ADJUSTMENT

6-12-1. Pinch Solenoid Replacement

(Removal)
1. Remove the Bottom Plate, L1, L2, L3, L4 P.C.Board and Shield Plate, refer to item 1-2 and 1-4.
2. Disconnect the connector P851 on the Mech. Interface P.C.Board as shown in figure 6-12-1.

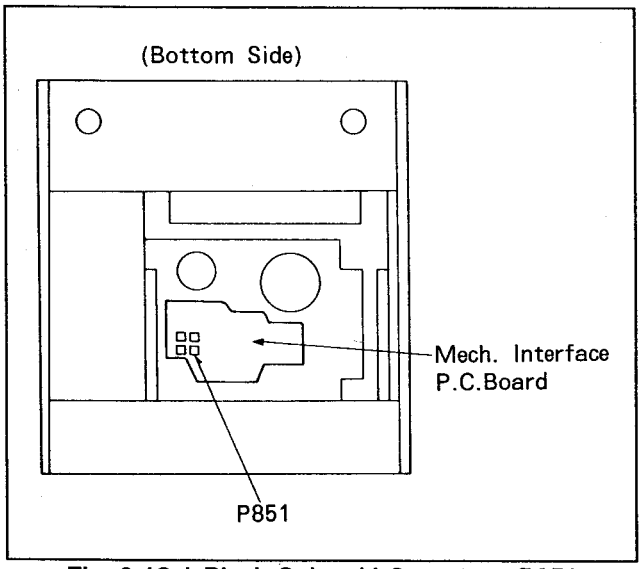

Fig. 6-12-1 Pinch Solenoid Connector P851

3. Unscrew the 3 Screws and hand off the Pinch Solenoid as shown in figure 6-12-2.

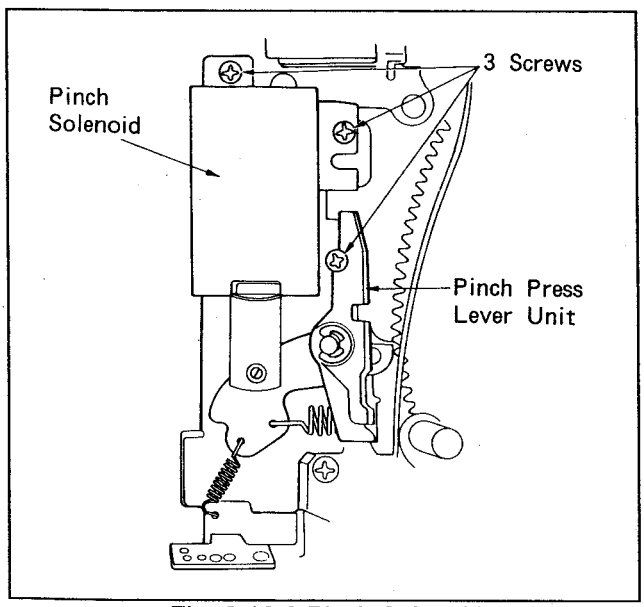

Fig. 6-12-2 Pinch Solenoid

(Installation)
1. Follow the removal steps in reverse order.

Note:
Pinch Solenoid Position Adjustment is necessary.

6-12-2. PINCH PRESS LEVER REPLACEMENT

(Removal)

1. Remove the pinch solenoid (refer to pinch solenoid replacement section).
2. Remove the spring as shown in Figure 6-12-3.
3. Remove the E-ring and washer as shown in Figure 6-12-3.
4. Remove the Pinch Press Lever.

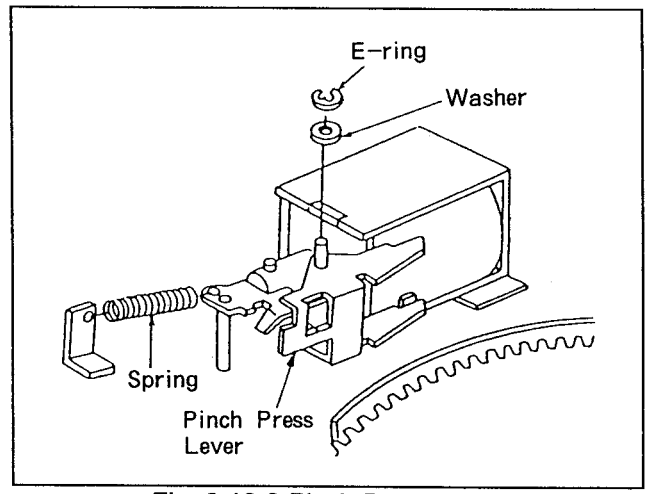

Fig. 6-12-3 Pinch Press Lever

(Installation)

1. Install the new Pinch Press Lever and follow the removal steps in reverse order, then the Pinch Pressure Lever position Adjustment is necessary.

6-12-3. PINCH PRESS LEVER POSITION ADJUSTMENT

Tools Required :
Eccentric Screwdriver (VFK0358)

1. In the loading completion and solenoid off condition.
2. Loosen the 2 screw (A) and insert the Eccentric Screwdriver to Hole (B) as shown in figure 6-12-4.
3. Turn the Eccentric Screwdriver so that the clearance (C) is 1.1 +/-0.1mm as shown in figure 6-12-4.
4. Tighten the 2 Screws (A).

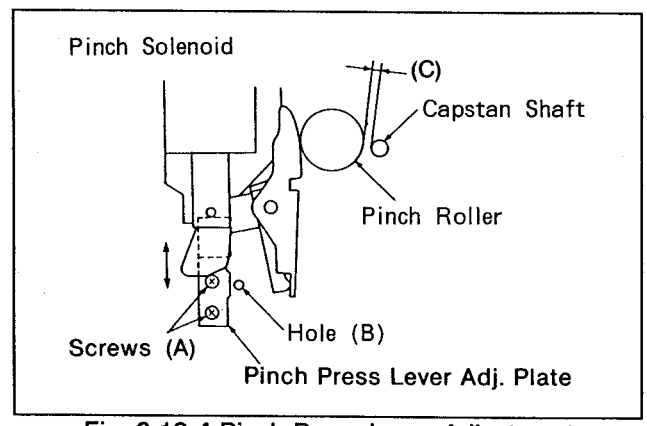

Fig. 6-12-4 Pinch Press Lever Adjustment

6-12-4. PINCH SOLENOID POSITION ADJUSTMENT

*Tools Required :
Eccentric Screwdriver (VFK0358)
Fan Type Tension Gauge (VFK66)

1. Remove the front loading (CARRIAGE) unit.
2. Play back a tape and measure the clearance (B) as indicated in figure 6-12-5. Verify that it is 1.3mm ± 0.2mm.
3. If not, loosen the 3 screws (A) (figure 6-12-5) and insert the eccentric screwdriver into hole (C).
4. Adjust the Pinch roller solenoid position with the eccentric screwdriver so that the clearance (B) is 1.3mm (±0.2mm).
5. Tighten the 3 screws (A).
6. Insert a work cassette and play back the tape.
7. Insert a 1.2mm thickness gauge to clearance (B).
8. Place the fan type tension gauge so that it's tip contacts the position (D) as shown in figure 6-12-5.
9. Push the tension gauge in the direction indicated by arrow (E) in figure 6-12-5.
10. Confirm that the placed thickness gauge is dropped when the tension gauge reading is 1450 +/-100 grams.
11. If it is not change the position of the spring as shown in figure 6-12-5.

Note:
When this adjustment is performed, the Pinch Press Lever Adjustment is completed.

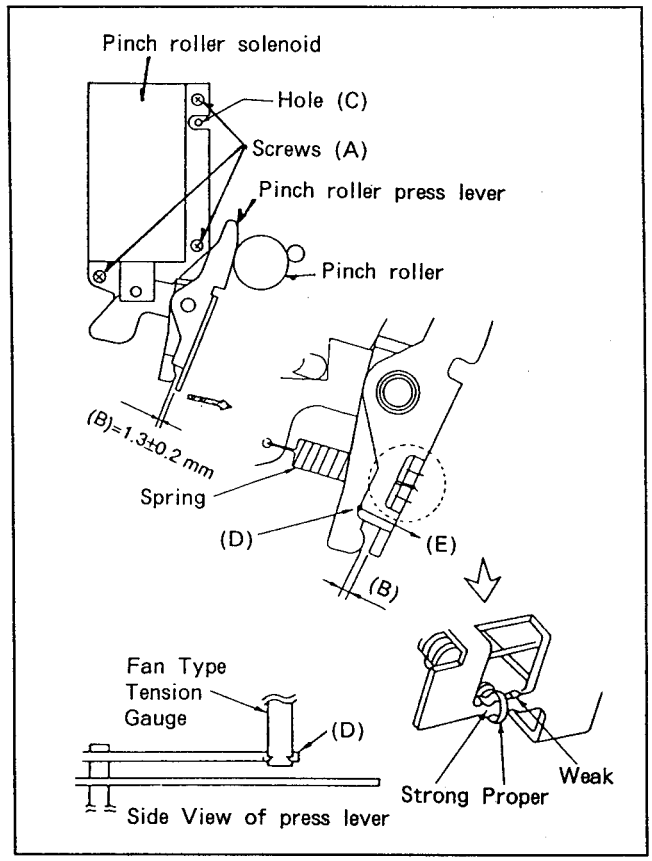

Fig. 6-12-5 Pinch Roller

6-15. TENSION SPRING PLATE REPLACEMENT

6-15-1. Tension Spring Plate Replacement

(Removal)

1. Remove the top panel.
2. Remove the front loading unit.
3. Loosen the hex. screw (A) and pull off the Tension Arm Unit as shown in figure 6-15-1.

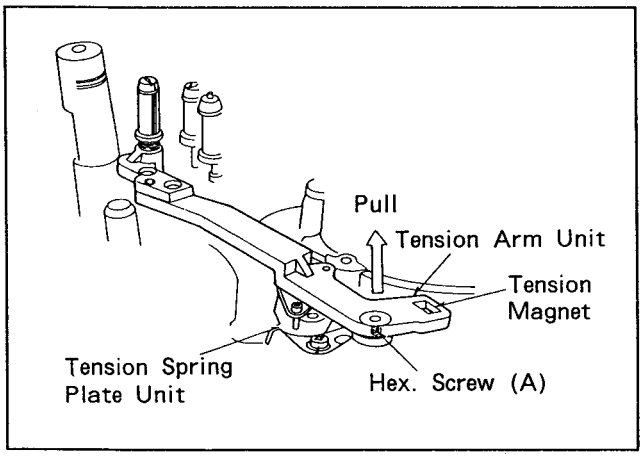

Fig. 6-15-1 Tension Arm Unit

4. Unscrew the screw (B) and remove the Tension Spring Plate Unit as shown in figure 6-15-2.

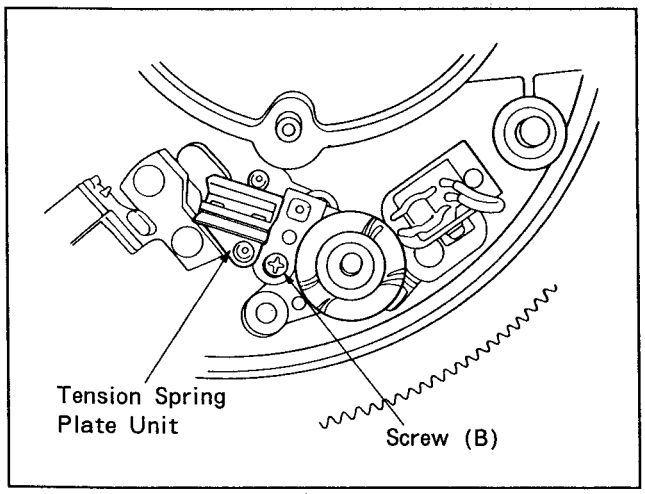

Fig. 6-15-2 Tension Spring Plate Unit

(Installation)

1. Follow the previous steps in reverse order.

Note:
After insert the Tension Arm Unit, pushing hold the shaft (C) from bottom side of the mech. In this case, remove the bottom plate and L P.C.Boards. Chassis shown in figure 6-15-3.

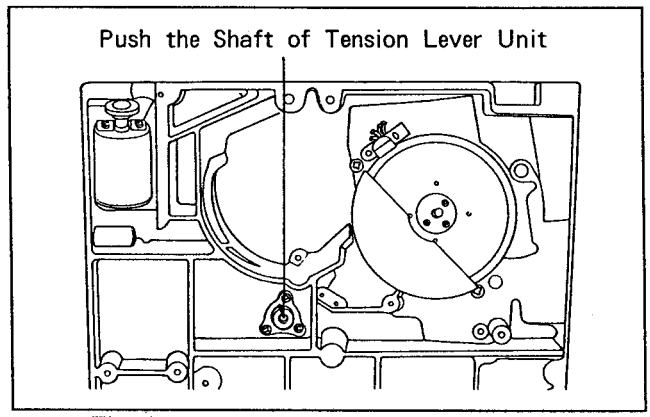

Fig. 6-15-3 Tension Arm Unit Installation

6-5-12. Magnet Adjustment

1. Turn the power off.
2. Remove the cassette compartment.
3. Turn the power on.
4. Set the VTR into Mechanical Test mode.

TEST → MECH → NO FRLD → STOP

(NO FRLD : NO FRONT LOADING)

5. Check the clearance (A) between magnet and sensor. This clearance should be between 0.5 ± 0.1mm.
6. If not, loosen the hex screw (C) and adjust the position of the magnet so that the clearance (A) is within specifications.
7. Tighten the hex screws.

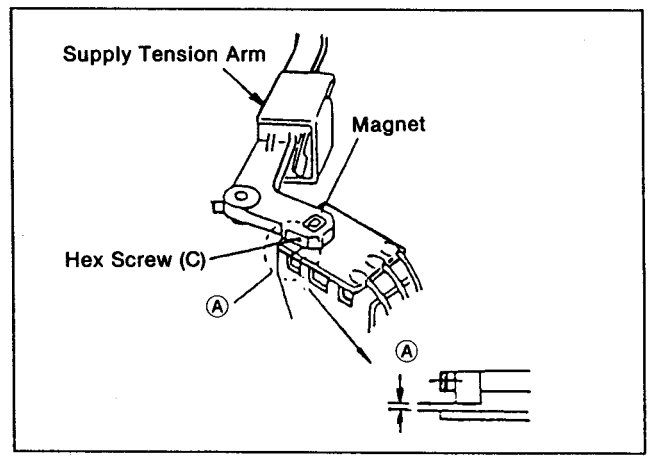

6-16. LOADING MOTOR AND LOADING MOTOR BELT REPLACEMENT

6-16-1. Loading Motor Belt Replacement

(Removal)

1. Remove the top panel (Refer to item 2-1).
2. Remove the Loading Motor Belt to direction (A) as shown in Figure 6-16-1.
3. Direction (A) as shown in Figure 6-16-1.

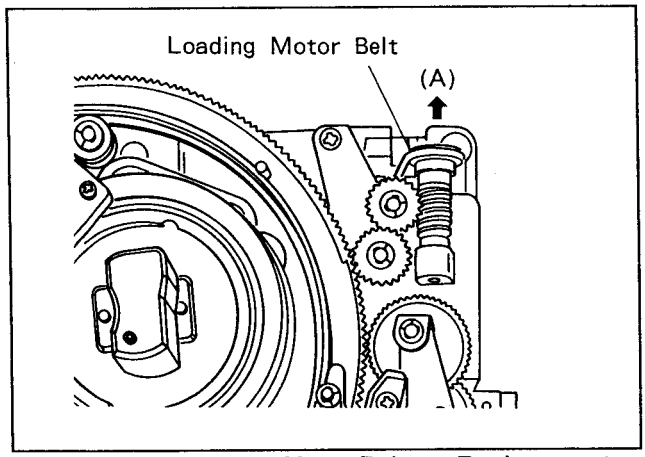

Fig. 6-16-1 Loading Motor Belt Replacement

(Installation)

1. Put new loading belt onto the loading motor first as shown in Figure 6-16-2.
2. Then replace onto the wormgear pulley as shown in Figure 6-16-2.
3. Clean the belt after replacement.
4. Follow the previous steps in reverse order.

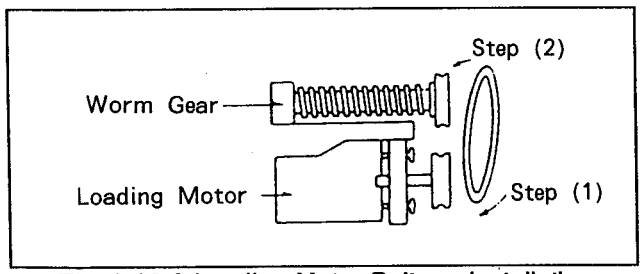

Fig. 6-16-2 Loading Motor Belt Installation

6-16-2. Loading Motor Replacement

(Removal)

1. Remove the top panel.
2. Unscrew the 2 screws (B) and remove the Loading Motor Base Unit with the Loading Motor as shown in Figure 6-16-4.

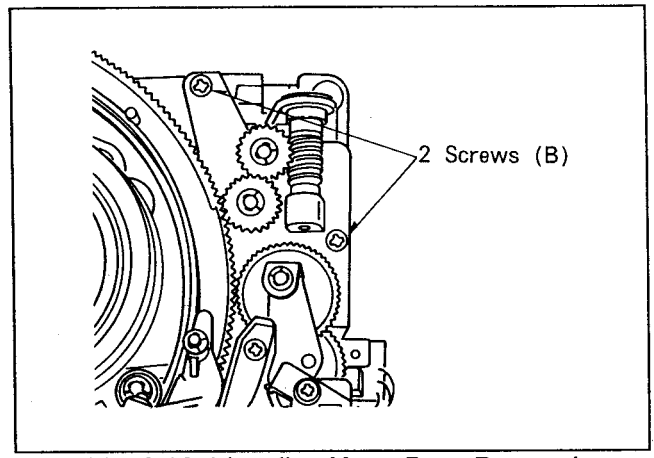

Fig. 6-16-4 Loading Motor Base Removal

3. Remove the bottom panel (Refer to item 2-2).
4. Open the front panel and remove the P.C.Boards from L1 to L4.
5. Unsolder the 2 lead wires on the Loading Motor and unscrew the 2 screws (C), then remove the Loading Motor as shown in Figure 6-16-5.

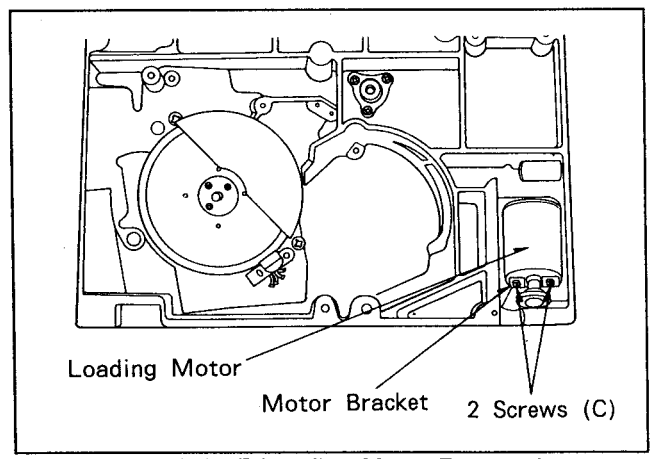

Fig. 6-16-5 Loading Motor Removal

(Installation)

1. Follow the previous steps in reverse order.
2. Check the loading and unloading.

6-17. FRONT LOADING MOTOR REPLACEMENT

(Replacement)

1. Remove the top panel (Refer to item 2-1).
2. Remove the front loading unit (Refer to item 2-3).
3. Unscrew 6 screws (A) and unsolder the 2 soldering portions, then remove the Front Loading Motor Unit and Left Side Plate as shown in Figure 6-17-1.
4. Unscrew the 2 screws (B) and remove the Front Loading Motor Unit as shown in Figure 6-17-1.

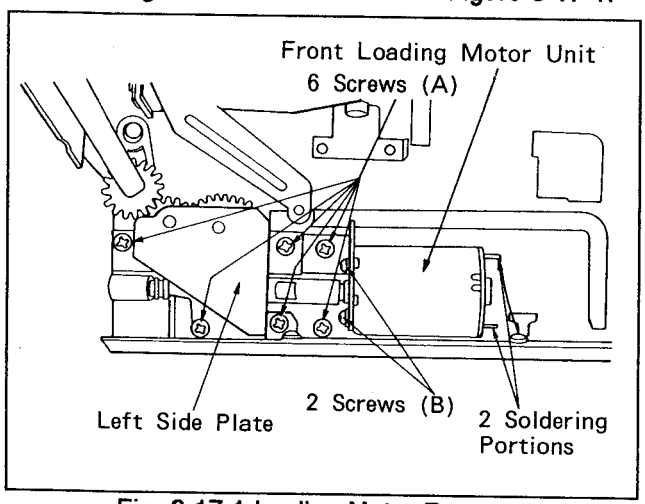

Fig. 6-17-1 loading Motor Removal

(Installation)

1. Follow the previous steps in reverse order.
2. Check the front loading and unloading by using a cassette.

6-18. FAN MOTOR REPLACEMENT (FIELD REPLACEMENT)

(Removal)

1. Unscrew 4 screws (A) and turn open the Rear Panel as shown in Figure 6-18-1.
2. Disconnect the Connector P449 and unscrew 4 screws and Nuts (B) and remove the Fan Motor (small) as shown in Figure 6-18-1.

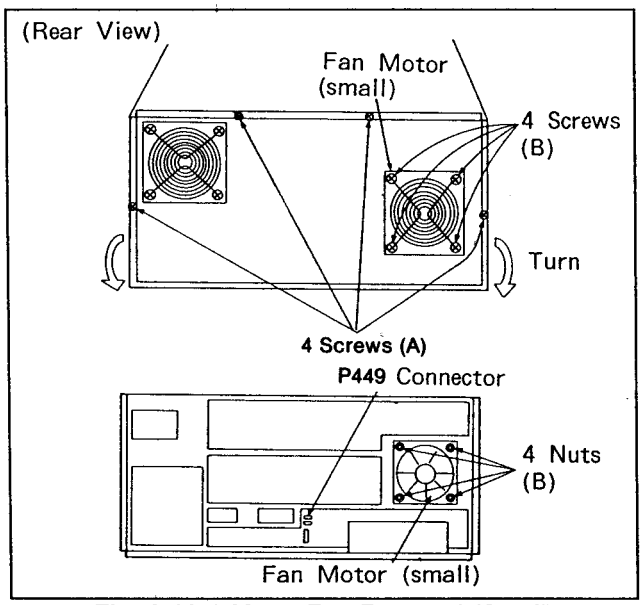

Fig. 6-18-1 Motor Fan Removal (Small)

3. Unscrew the 4 screws (C) and pull out the fan motor from rear jack as shown figure 6-18-2.

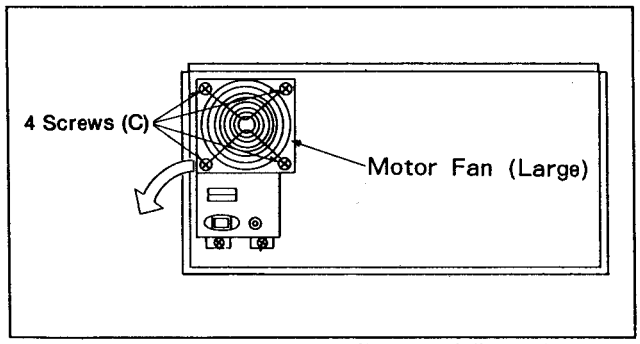

Fig. 6-18-3 Fan Motor Removal (Large)

4. Cut the 2 uwires (D) and remove the fan motor as shown in figure 6-8-14.

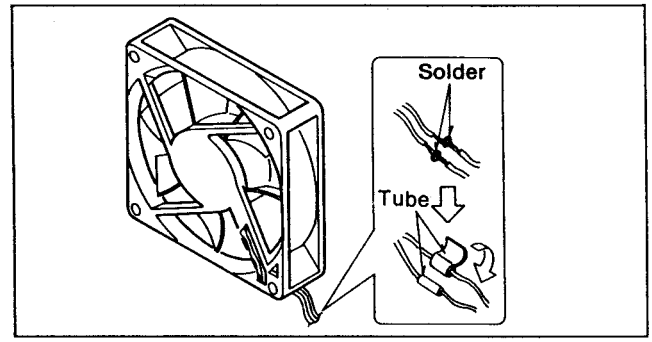

(Installation)

1. Solder the 2 wires of new fan motor with insulation tape as shown in figure 6-18-4.
2. Follow the previous steps in reverse order.

6-19. EJECT SWITCH REPLACEMENT

(Removal)

1. Unscrew the 4 screws (A) and pull the Front Panel Forward as shown in Figure 6-19-1.

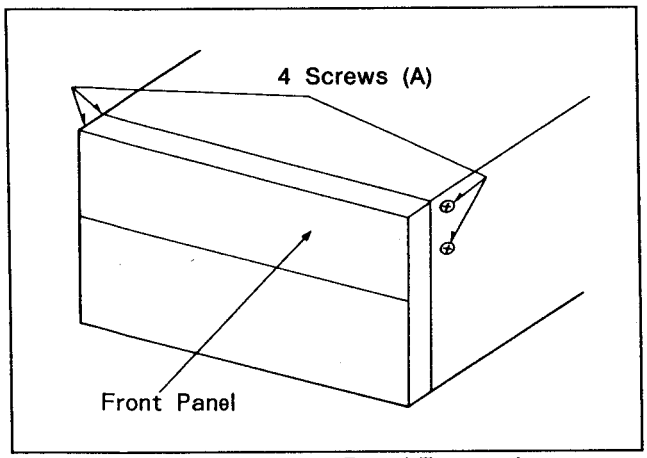

Fig. 6-19-1 Front Panel Removal

2. Unscrew 2 screws (B), then remove the Eject Switch P.C.Board shown in Figure 6-19-2.

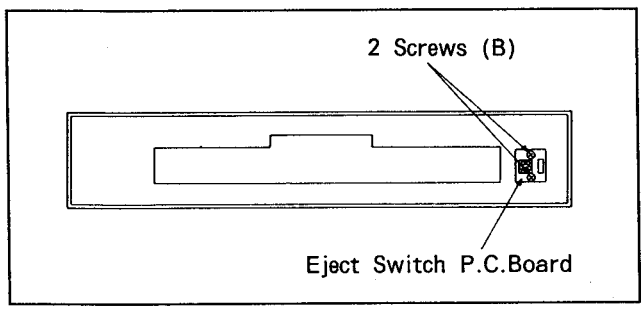

Fig. 6-19-2 Eject Switch P.C.Board Removal

3. Unsolder the 6 soldering portions as shown in Figure 6-19-3.

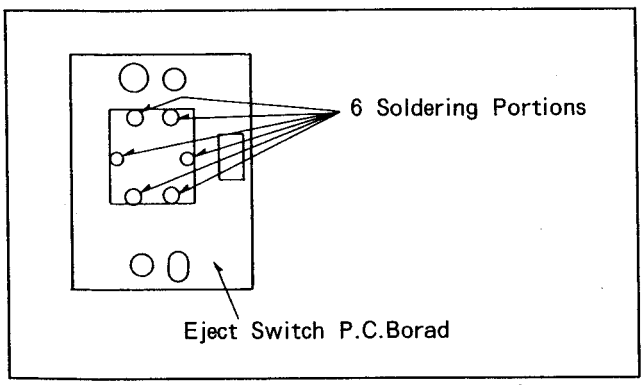

Fig. 6-19-3 Eject Switch Removal

(Installation)

1. Fillow the previous steps in reverse order.

6-20. POWER SWITCH REPLACEMENT

(Removal)

1. Unscrew the 4 screws (A) and pull the Front Panel Forward as shown in Figure 6-20-1.

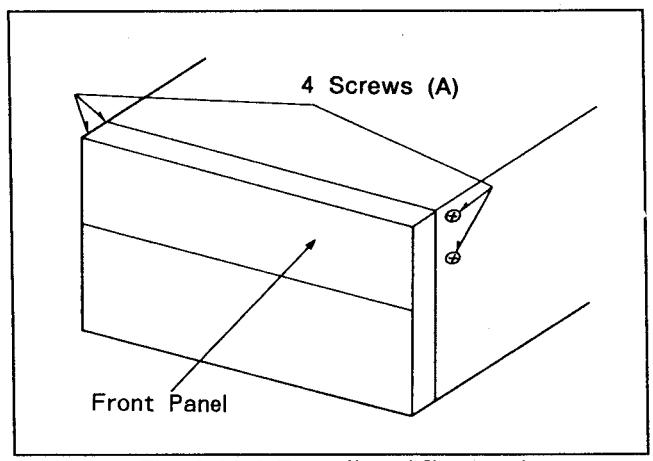

Fig. 6-20-1 Front Panel Removal

2. Unscrew the 3 screws (B) and remove the Power Switch Angle as shown in Figure 6-20-2.

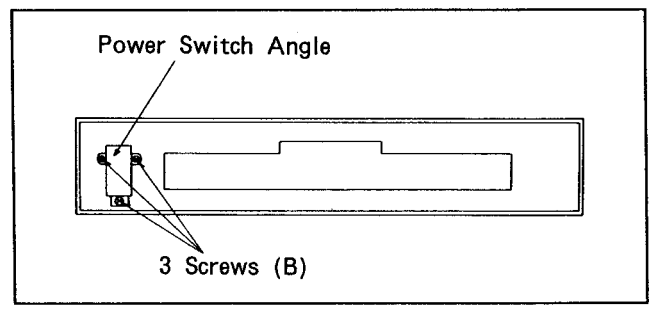

Fig. 6-20-2 Power Switch Angle Removal

3. Unscrew the 2 screws (C) and unsolder the wires as shown in Figure 6-20-3.

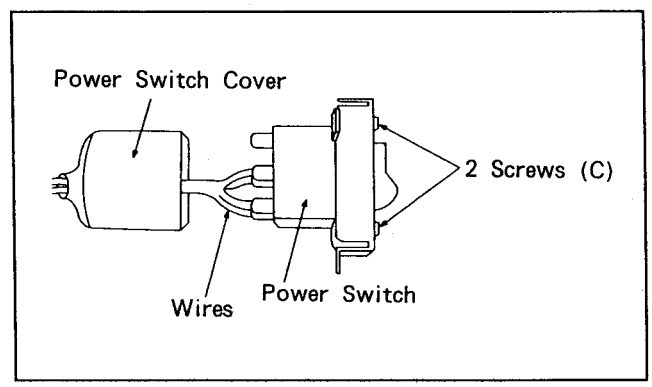

Fig. 6-20-3 Power Switch Removal

(Installation)

1. Follow the previous steps in reverse order.

6-21. IP BASE UNIT REPLACEMENT

6-21-1. Replacement

(Removal)

1. Remove the top panel (Refer to item 2-1).
2. Loosen the Hex. screw (C) and remove the E-Ring (A), 2 washers (B), IP Base Spring and the IP Base Unit as shown in Figure 6-21-1.

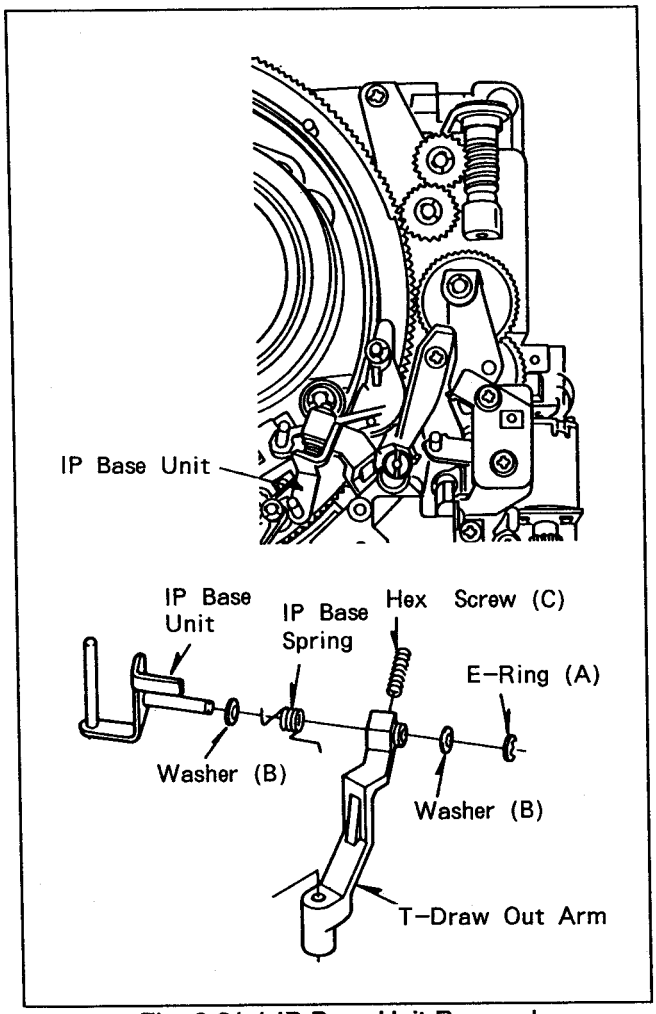

Fig. 6-21-1 IP Base Unit Removal

(Installation)

1. Follow the previous steps in reverse order.
2. Adjust the tilt adjustment of the IP Base Unit (Refer to items 5-14, 5-15).

6-22. CAM GEAR REPLACEMENT AND ADJUSTMENT

6-22-1. Replacement

(Removal)

1. Turn the Loading Ring to loading completion.
2. Remove the 3 screws (A) and P12 Post Base as shown in figure 6-22-1.

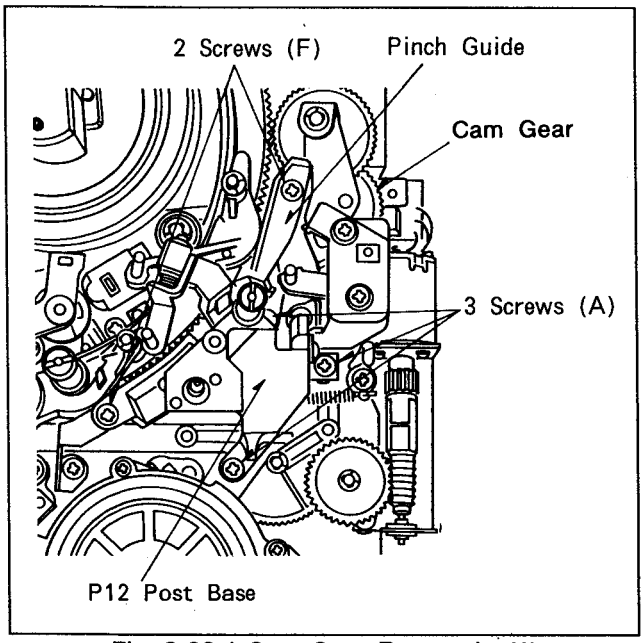

Fig. 6-22-1 Cam Gear Removal - (1)

3. Remove the E-Ring (B) and Washer (C), then remove the Slant Drive Angle and Drive Angle, Slant Charge Spring as shown in figure 6-22-2.
4. Remove the E-Ring (D), Washer (E) and the Drive Plate Unit as shown in figure 6-22-2.

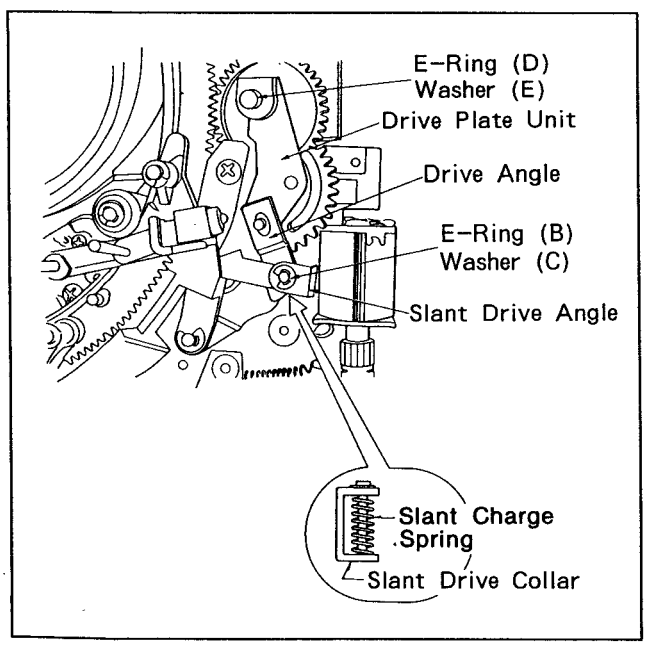

Fig. 6-22-2 Cam Gear Removal - (2)

5. Unscrew the 2 screws (F) and remove the Pinch Guide (Plastic) as shown in figure 6-22-1.
6. Remove the screw (G) and remove the Pinch Guide Bracket as shown in figure 6-22-3.
7. Remove the Intermediate Gear, E-Ring (H), Washer (I) and the Cam Gear as shown in figure 6-22-3.

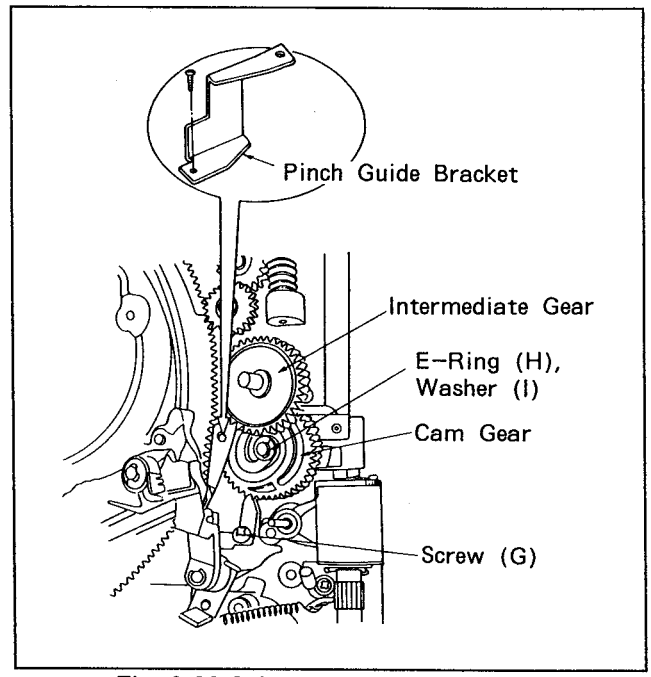

Fig. 6-22-3 Cam Gear Removal - (3)

(Installation)

1. Follow the previous steps in reverse order, then Cam Gear Phase Adjustment should be performed, refer to follows.

6-22-2. Cam Gear Phase Adjustment

1. Install the Intermediate Gear and the Cam Gear, then the holes a, b should be matched with the holes a' of the Intermediate Gear and b' of the Cam Gear as shown in figure 6-22-4.
2. Install the Drive Plate then the pin of the Drive Plate should be matched with the groove position C of the Cam Gear as shown in figure 6-22-4.

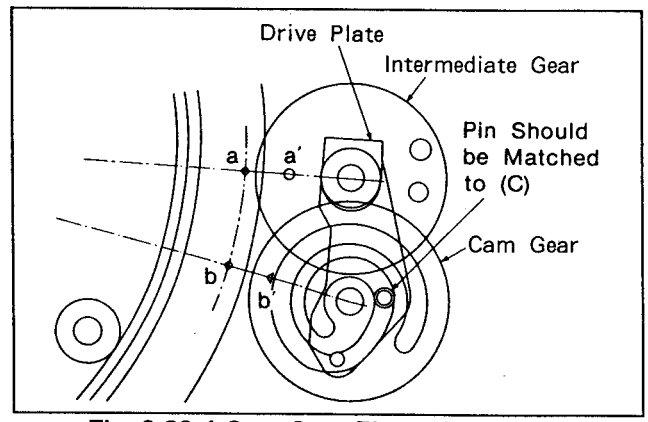

Fig. 6-22-4 Cam Gear Phase Adjustment

6-23. RING ROLLER UNIT REPLACEMENT

(Removal)

1. Unscrew the 2 screws (A) and remove the Ring Loller Unit as shown in figure 6-23-1.

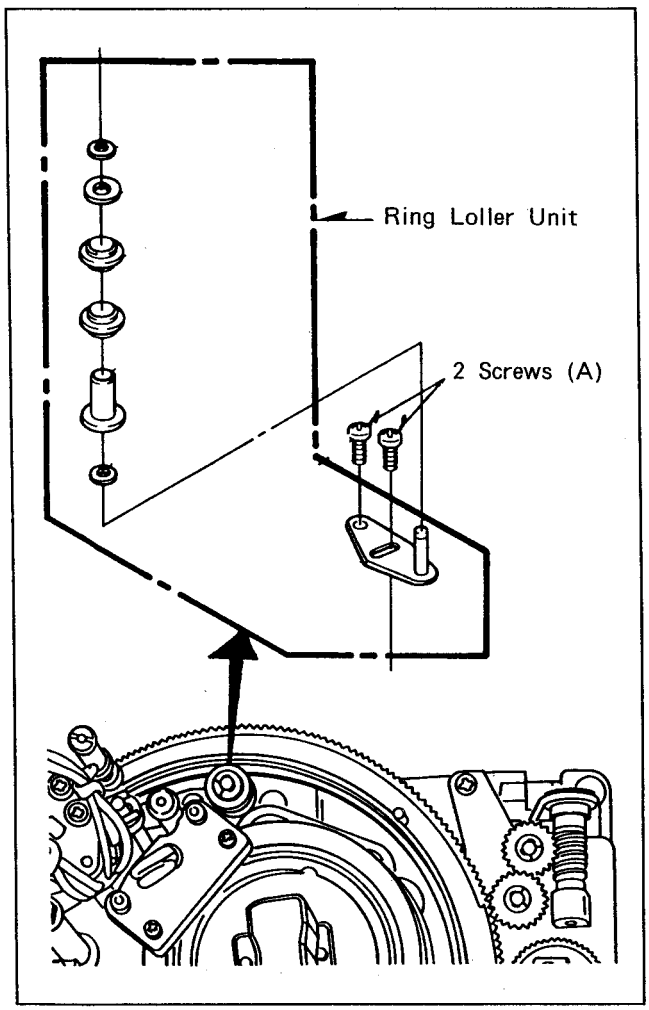

Fig. 6-23-1 Ring Loller Unit Removal

(Installation)

1. Install the Ring Loller Unit and tighten the 2 screws (A) as shown in figure 6-23-1.

6-24. SUB LOADING MOTOR REPLACEMENT

(Removal)

1. Remove the top panel (Refer to item 2-1).
2. Remove the front loading unit (Refer to item 2-3).
3. Remove the E-Ring (A), Washer (B), Decrease Gear, 2 screws (C) and the T-Arm Reset Spring, then remove the Sub Loading Motor Unit as shown in figure 6-24-1.
4. Unsolder the wires (D) and unscrew the 2 screws (E), then remove the Sub Loading Motor as shown in figure 6-24-1.

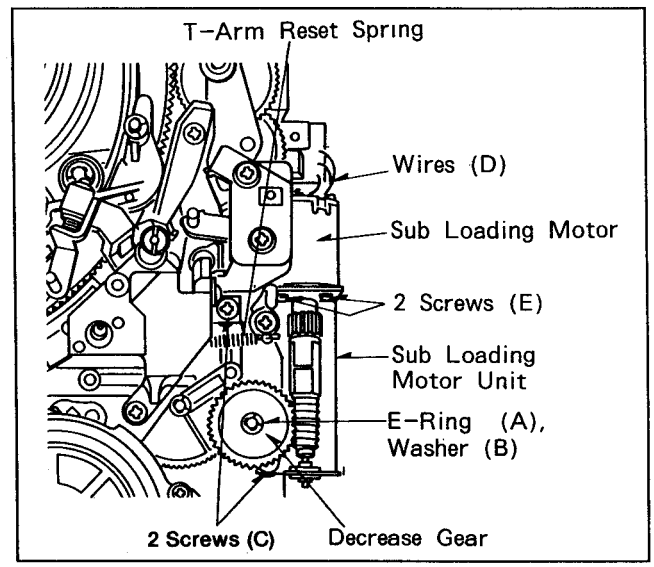

Fig. 6-24-1 Sub Loading motor Removal

(Installation)

1. Follow the previous steps in reverse order.

6-25. STOPPER SOLENOID REPLACEMENT AND ADJUSTMENT

6-25-1. Replacement

(Removal)

1. Remove the bottom plate (Refer to item 2-2).
2. Remove the L boards from L1 to L4.
3. Unscrew the 2 screws (A) and remove the Solenoid Holder as shown in figure 6-25-1.
4. Unsolder the lead wires on the stopper solenoid.
5. Unscrew the 2 screws (B) and remove the Stopper Solenoid as shown in figure 6-25-1.

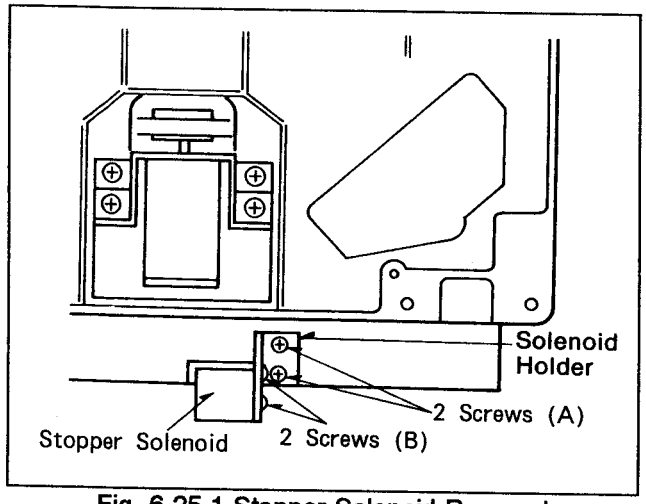

Fig. 6-25-1 Stopper Solenoid Removal

(Installation)

1. Follow the previous steps in reverse order, then the Stopper Solenoid position should be adjusted as follows.

6-25-2. Stopper Solenoid Position Adjustment

1. The Reel Base Unit should be on the small cassette position.
2. Loosen the 2 screws (B), move the Stopper Solenoid to direction (C) so that the clearance (D) is 0.2 +/-0.1mm.

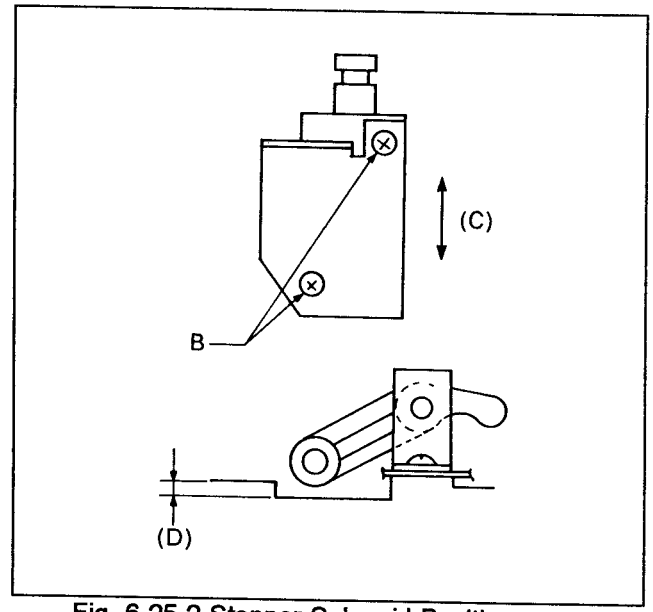

Fig. 6-25-2 Stopper Solenoid Position Adjustment

6-26. WORM MOTOR UNIT REPLACEMENT (Reel Position Change Motor)

(Removal)

1. Remove thte bottom panel (Refer to item 2-2).
2. Remove the L P.C.Boards from L1 to L4.
3. Unsolder the read wires of the Worm Motor Unit.
4. Unscrew the 2 screws (A) and remove the Timing Belt and the Worm Motor Unit as shown in figure 6-26-1.

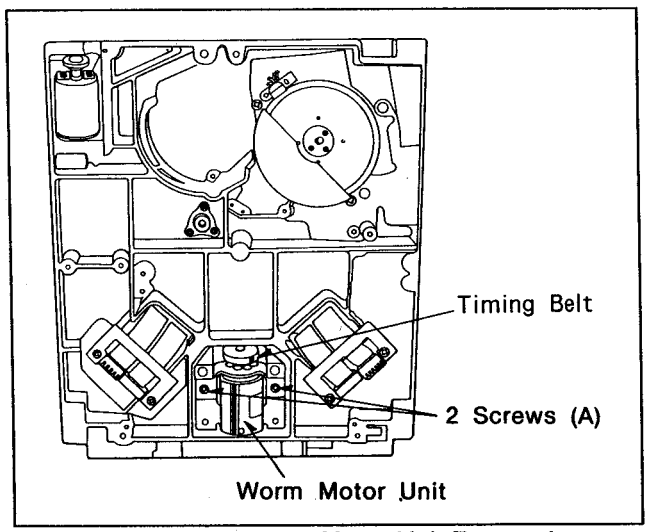

Fig. 6-26-1 Worm Motor Unit Removal

(Installation)

1. Follow the previous steps in reverse order.

6-27. LOADING/UNLOADING, SUB LOADING/SUB UNLOADING COMPLETION SWITCHES POSITION ADJUSTMENT

*Tools Required :
Fine Adj. Driver

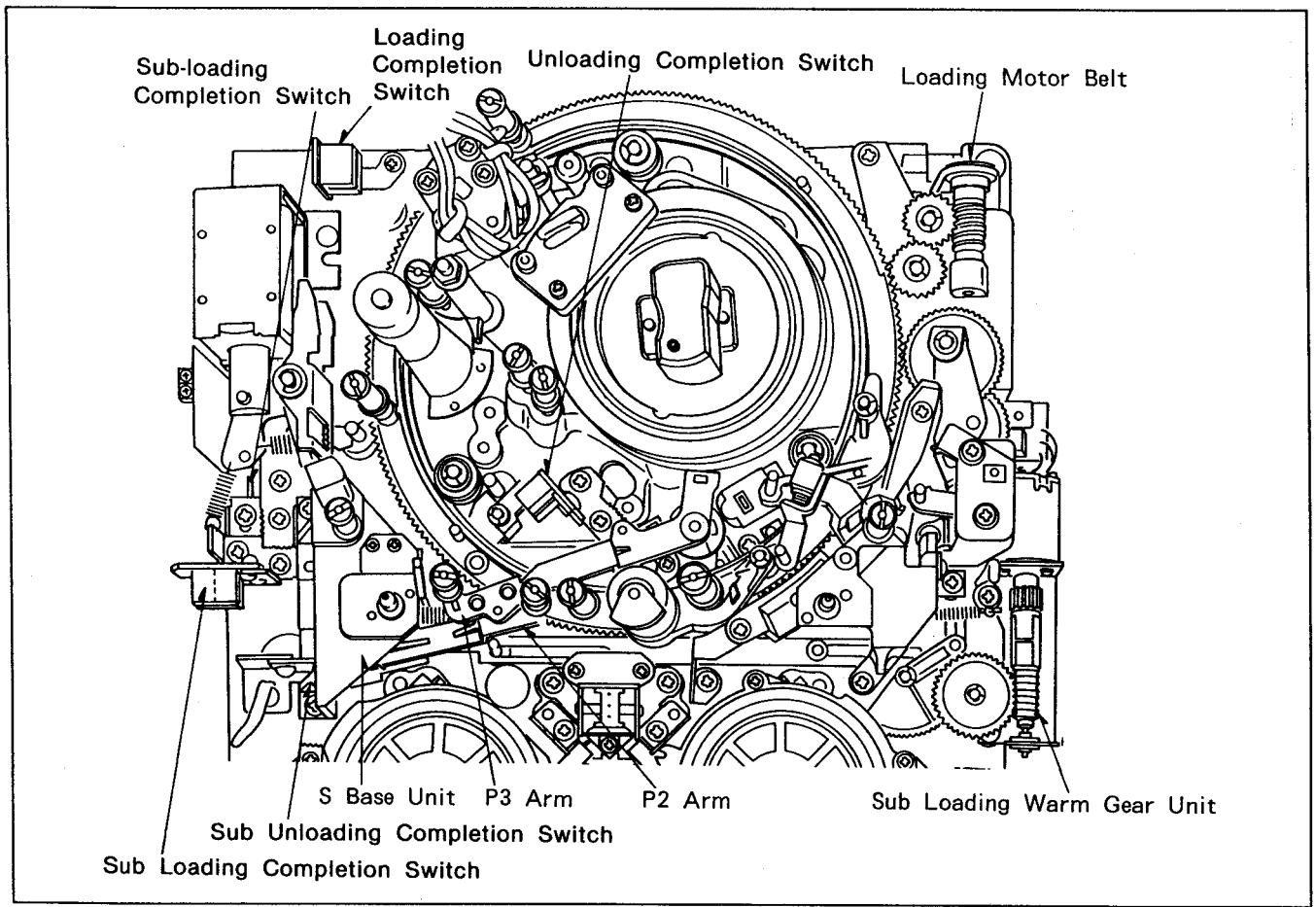

Fig. 6-27-1 Loading/Unloading, Sub Loading/Sub Unloading Completion Switch

1. Remove the top panel (Refer to item 2-1).
2. Turn the Loading Motor Belt to loading completion.
3. Loosen the 2 screws (A).
4. Insert the Fine Adj. Driver to the hole (B).
5. Turn the Fine Adj. Driver so that the clearance (C) is 1.8+/-0.2mm.
6. Tighten the 2 screws (A).
7. Turn the Loading Motor Belt to unloading completion.
8. Loosen the 2 screws (D).
9. Insert the Fine Adj. Driver to the hole (E).
10. Turn the Fine Adj. Driver so that the clearance (F) is 1.8+/-0.2mm.
11. Tighten the 2 screws (D) and remove the front loading unit (Refer to item 2-3).

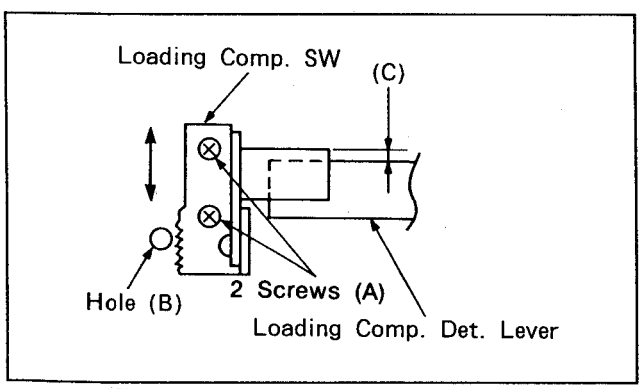

Fig. 6-27-2 Loading Completion SW

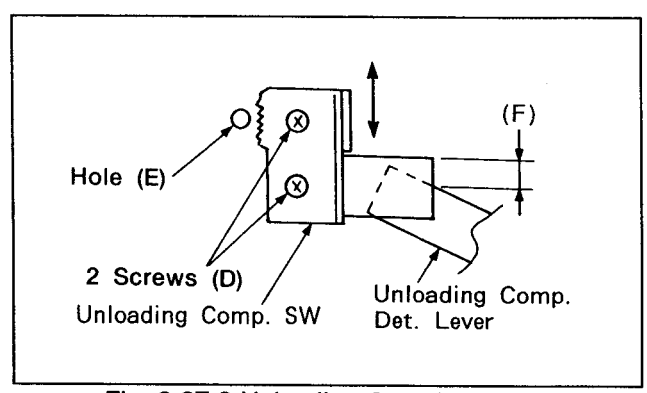

Fig. 6-27-3 Unloading Completion SW

12. Turn the Sub Loading Warm Gear Unit so that the P2 Arm just contacts with the S Base Unit as shown in figure 6-27-1.
13. Loosen the 2 screws (G).
14. Insert the Fine Adj. Driver to the hole (H).
15. Turn the Fine Adj. Driver so that (I) is 1+/- 0.2mm.
16. Tighten the 2 screws (G).

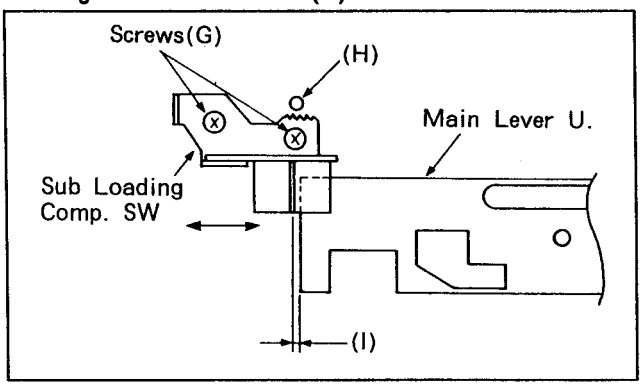

Fig. 6-27-4 Sub Loading Completion SW

17. Turn the Sub Loading Warm Gear Unit by 1-1.5 rotation from the position that the P2 Arm contacts with the P3 Arm.
18. Loosen the 2 screws (J).
19. Insert the Fine Adj. Driver to the hole (K).
20. Turn the Fine Adj. Driver so that (L) is 2+/- 0.2mm.
21. Tighten the 2 screws (J).
22. Reinstall the front loading unit.

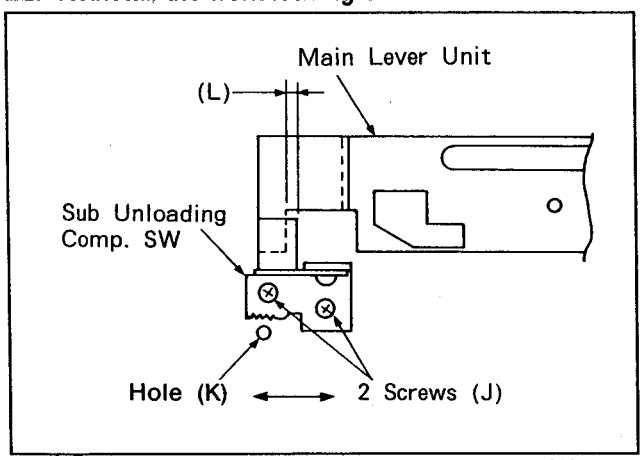

Fig. 6-27-5 Sub Unloading Completion SW

6-27-1. Sub Loading Conpletion SW Adjustment

SPEC	FG COUNTER 70~73(on the FRONT PANEL)
TEST	FRONT DISPLAY
MODE	EJECT → LOADING COMPLETION
TAPE	THE END OF L CASSETTE (180mm)
M.EQ	
INPUT	
ADJ.	HOLE D

<STEP 1>
1. Open the TEST MECHA menu.
2. Insert the L cassette wound to the end.
3. Check the FG counter whether it is within spec. or not.
4. If not, adjust the Sub loading completion SW position following <STEP 2>.
5. If within spec. confirm twice more.

<STEP 2>
1. Loosen the screws B.
2. Insert the Gear driver to the hole D and adjust the position.
3. After adjustment tighten the screws B.
4. Check the <STEP 1> again.

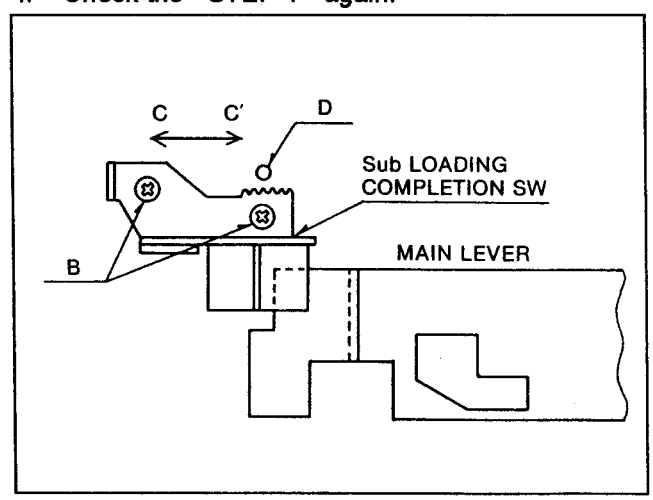

6-28. CLEANER ROLLER REPLACEMENT

(Removal)

1. Remove the top panel (Refer to item 2-1).
2. Unscrew the 2 screws (A) and remove the cleaner unit as shown below.

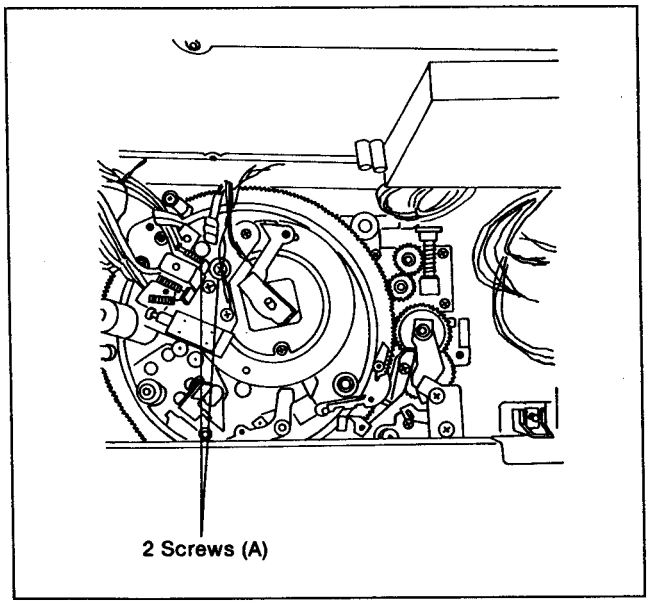

3. Push the cleaner roller by hand and remove the roller stopper as shown below.

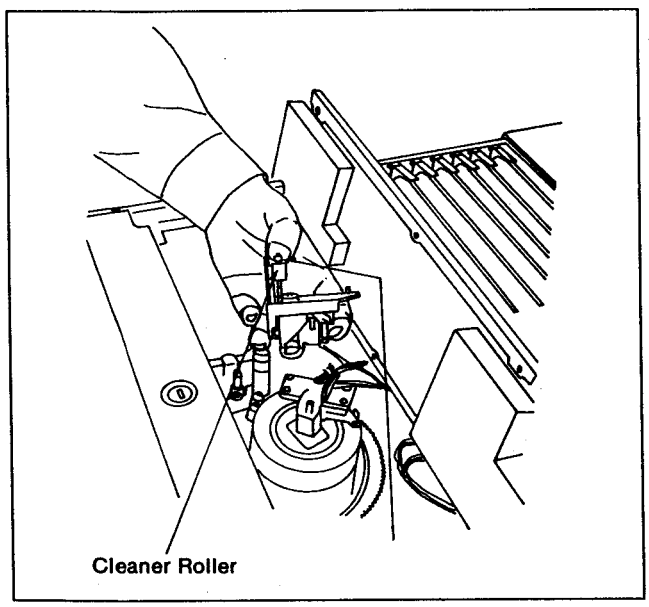

(Installation)

1. Follow the previous steps in remove order.

6-29. CLEANER SOLENOID REPLACEMENT AND ADJUSTMENT

6-29-1. CLEANER SOLENOID REPLACEMENT

(Removal)

1. Remove the top panel (Refer to item 2-1).
2. Unscrew the 2 screws (A) and remove the cleaner unit (Refer to item 6-28).
3. Unscrew the 2 screws (B) and remove the cleaner solenoid unit as shown below.

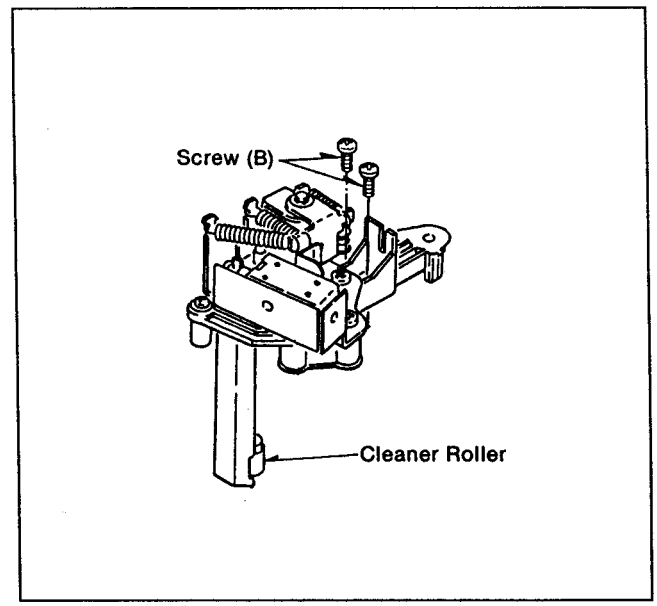

4. Unsolder the 2 wires and remove the cleaner solenoid.

(Installation)

1. Follow the previous steps in reverse order.
2. Position adjustment should be performed as follows.

6-29-2. CLEANER SOLENOID ADJUSTMENT

Toll Required :
Eccentric Screwdriver (VFK0358)

1. Push the solenoid to the arrow direction by hand.
2. Confirm that the clearance (A) is center position as shown in figure 6-29-2.
3. If it is not, loosen the 2 screws (B) and insert an eccentric screwdriver into hole (C).
4. Adjust the cleaner solenoid position with the eccentric screwdriver so that the clearance (A) is 0.3mm ~ 0.4mm.
5. Tighten the 2 screws (B).

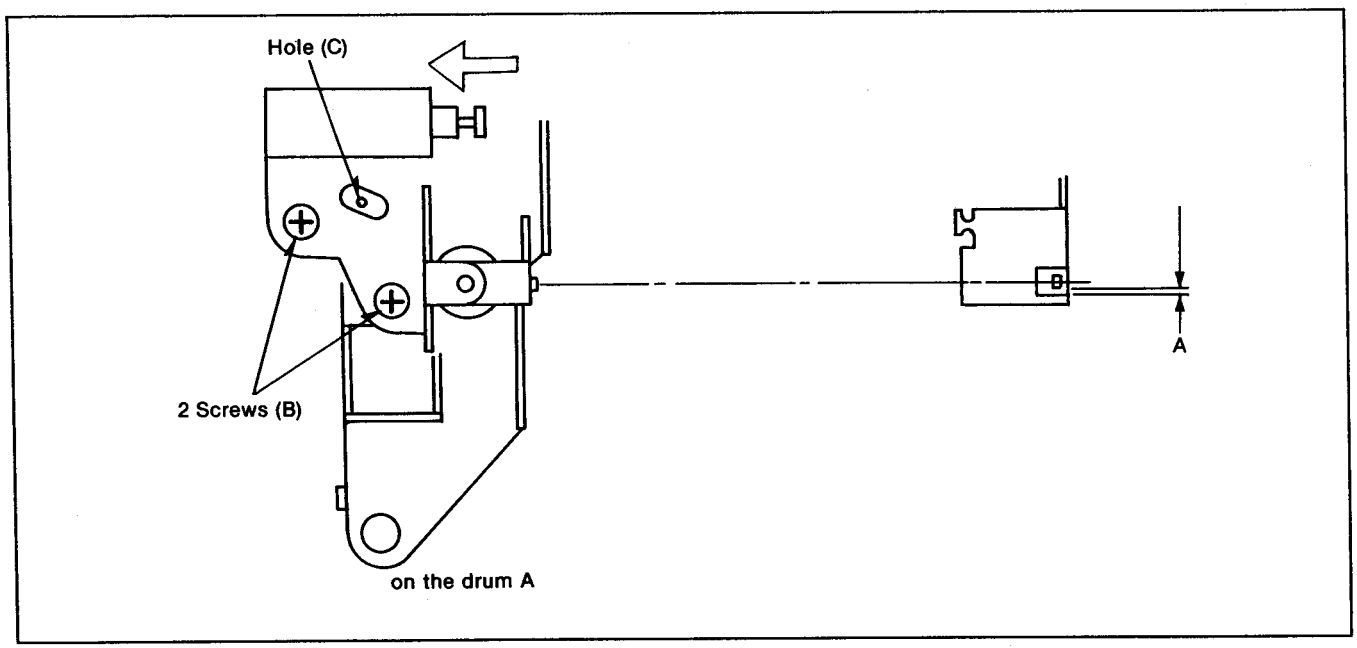

Fig. 6-29-2 Cleaner Solenoid Position Adjustment

6-30. SUPPLY REEL TABLE AND TAKE UP REEL REPLACEMENT AND ADJUSTMENT

6-30-1. REPLACEMENT

Note : Be careful drop the reel table down. Because some damage are appeared to bearing in the reel table by it.

1. Remove the top panel (Refer to item 2-1).
2. Remove the front loading unit (Refer to item 2-3).
3. Remove the E-rings (A) and washers (B) and pull out the supply reel table and take up reel table.

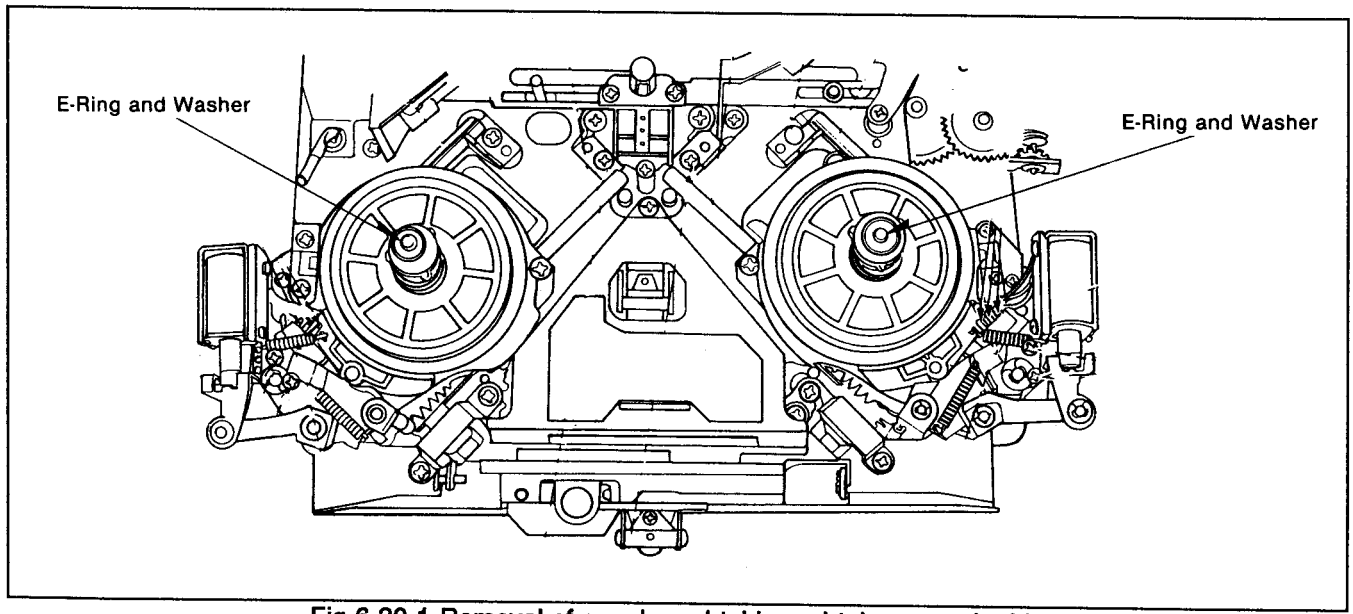

Fig 6-30-1 Removal of supply reel table and take up reel table

(Installation)

1. Install the reel tqables following the previous steps in reverse order.
2. Reel height adjustment should be performed as follows.

6-30-2. ADJUSTMENT (FACTORY ADJUSTMENT)

Tool Required :
Reel Height Adjustment Tool (VFK0772)

1. Remove the top panel (Refer to item 2-1).
2. Remove the front loading unit (Refer to item 2-3).
3. Install the Mech. neutral adjustment plate on the reel table correctly.
4. Set the reel height adjustment tool on the reel table as shown in figure 6-30-2.

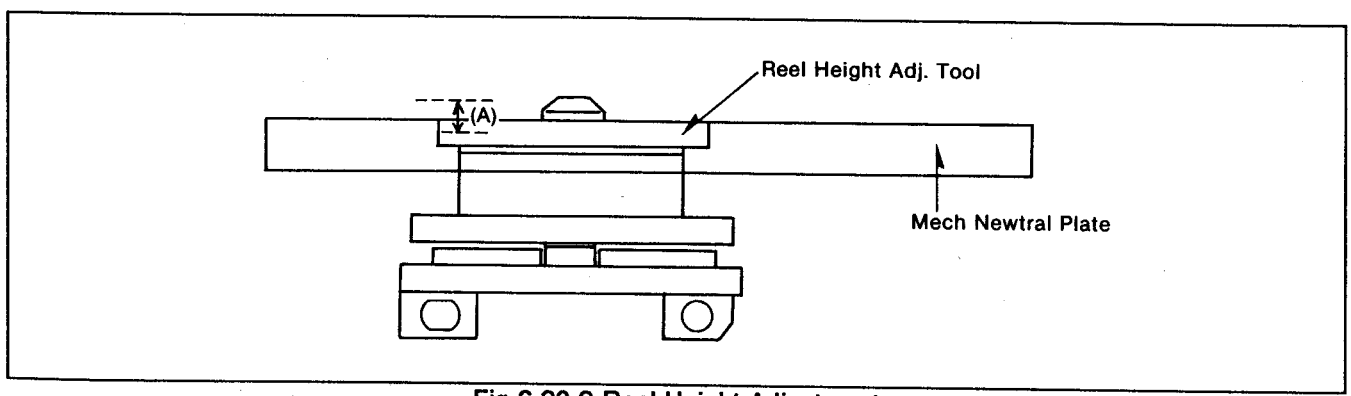

Fig 6-30-2 Reel Height Adjustment

5. Confirm that the A position is flat as shown in figure 6-30-2.
6. If it is low position, install the washer (XWGV4Z7G or XWGV4Y7G) between the reel base and reel table.
7. If it is high position, remove the washer between the reel base and reel table.

6-31. CASSETTE IN SW ADJUSTMENT

1. Remove the Front Loading unit (Refer to item 2-3)
2. Insert a L cassette untill touching to the kick lever as shown in Figure 6-31-1.
3. Loosen two screws (A) and insert the eccentric screwdriver into hole (b).
4. Adjust SW position so that the gap "T" is 0mm ~ 0.5mm.
5. Tighten two screws (A).

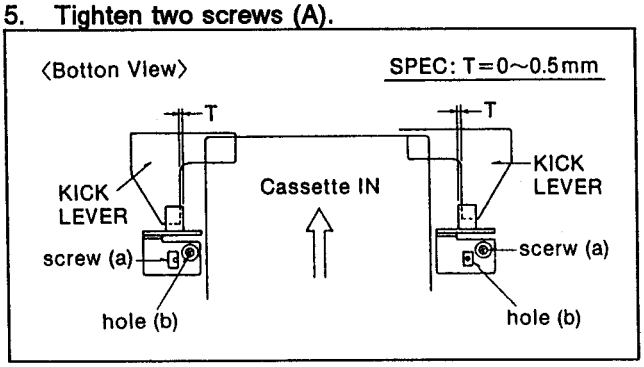

Fig. 6-31-1

6-32. V PHOTO SW ADJUSTMENT

1. Remove the Front Loading unit (Refer to item 2-3)
2. Insert a screwdriver (negative) into hole (A)(worm gear) and rotate clockwise until cassette holder is down condition as shown in Figure 6-32-1.
3. Loosen a screw (A) and insert a eccentric screwdriver into hole (b).
4. Adjust SW position so that the GAP "T" is 0mm ~ 0.5mm as shown in Figure 6-32-2.
5. Tighten a screw (A).

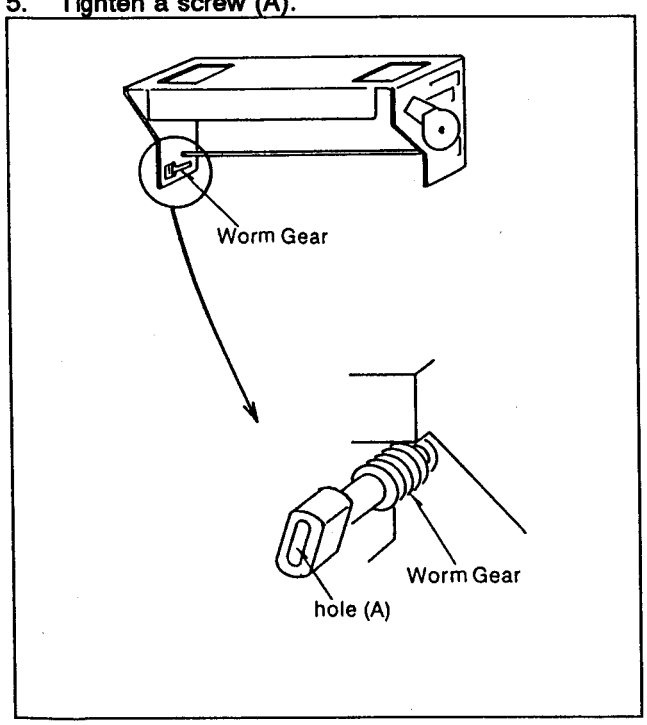

Fig. 6-32-1

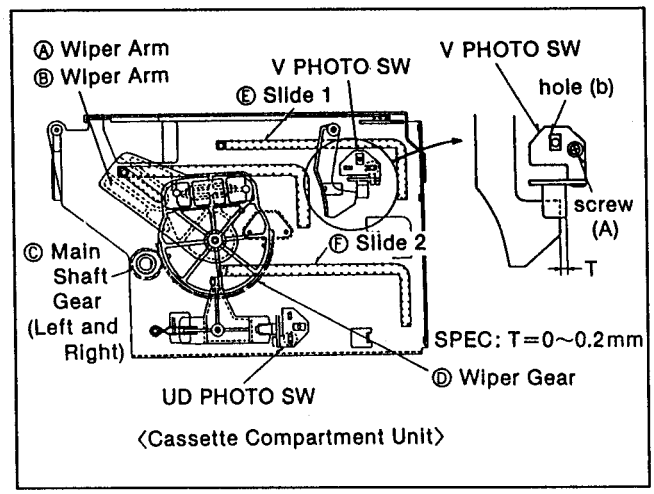

Fig. 6-32-2

6-33. UD PHOTO SW ADJUSTMENT

1. Remove theFront Loading unit (Refer to item 2-3)
2. Rotate the worm gear clockwise until gap "T" is 1.5mm ± 0.2mm as shown in Figure 6-33-1.
3. Loosen a screw (A) and insert a eccentric screwdriver into hole (b).
4. Adjust SW position so that the "T_1" is 1.5mm ± 0.1mm as shown in Figure 6-33-2.
5. Tighten a screw (A).

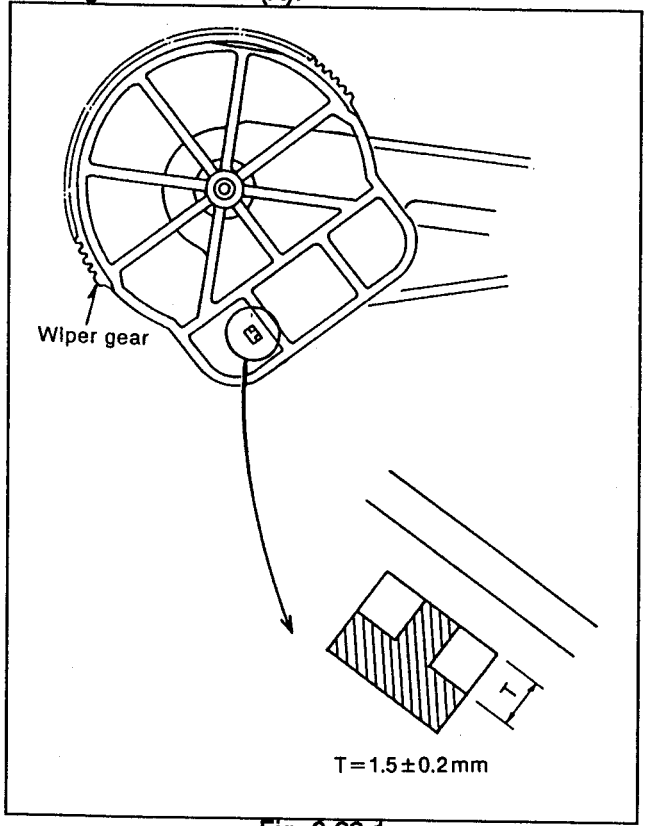

Fig. 6-33-1

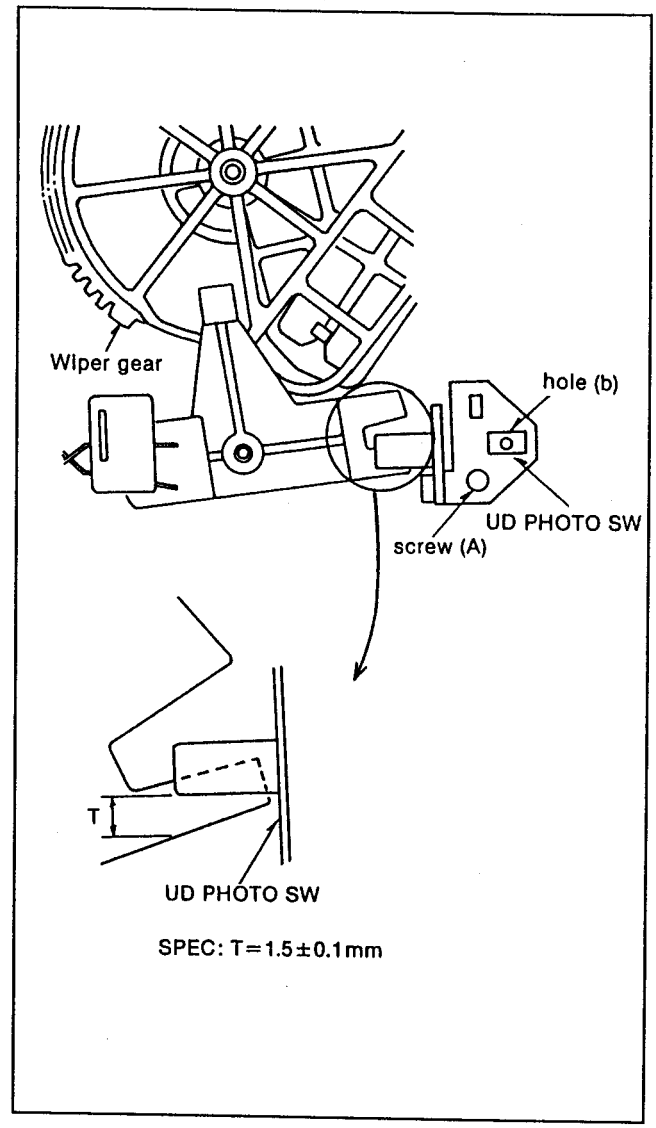

Fig. 6-33-2

6-34. AC HEAD CLEANER UNIT REPLACEMENT

(Removal)

1. Turn the sub loading motor to sub loading completion mode.
2. Pushing hold the ring driver gear and turn the loading ring to counterclockwise until screw (A) appear on the AC HEAD CLEANER unit as shown in Figure 6-34-1.
3. Unscrew a screw (A) and remove the AC HEAD CLEANER unit.

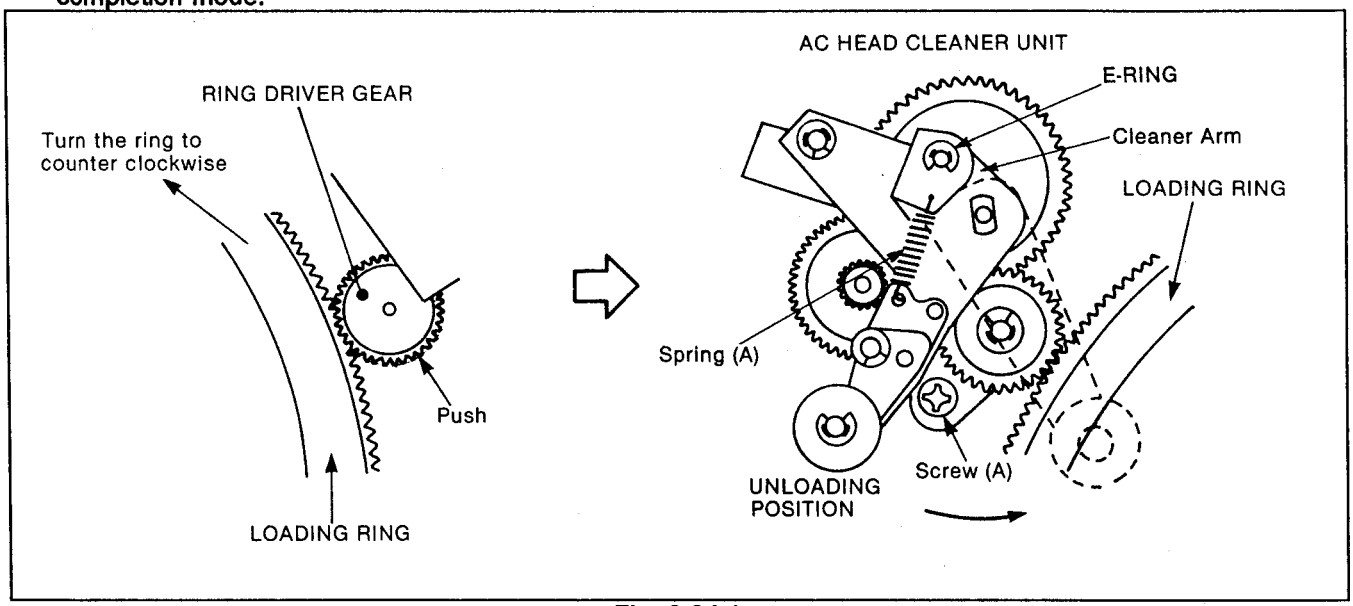

Fig. 6-34-1

4. Remove the loading sensor unit from the Cleaner Unit.

(Installation & Adjustment)

MACHINE CONDITION : UNLOADING MODE.

1. Insert the AC HEAD CLANER unit in the Mechanical chassis as shown in Figure 6-34-2.
2. Do not bite intermediate gear and ring gear then adjust drive cam gear so that the drive cam gear hole and CLEANER BASE hole become same position as shown in Figure 6-34-3.
3. Engage the cam gear and the ring gear then tight a screw (A) loosely.
4. Turn the loading ring so that the Machine Condition becomes item (removal) No.2 tight a screw (A) as shown Figure 6-34-1.

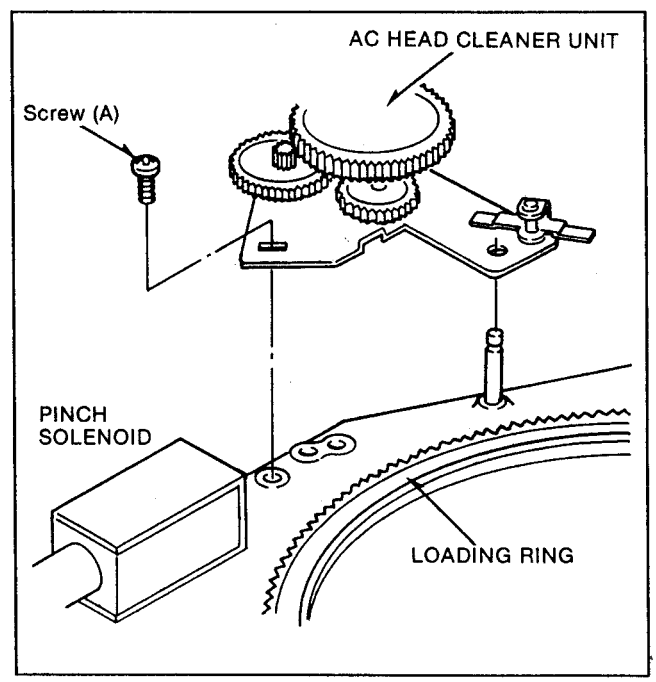

Fig. 6-34-2

5. Install the loading sensor unit.

Note: When install it, position adjustment necessary (Refer to item 6-27).

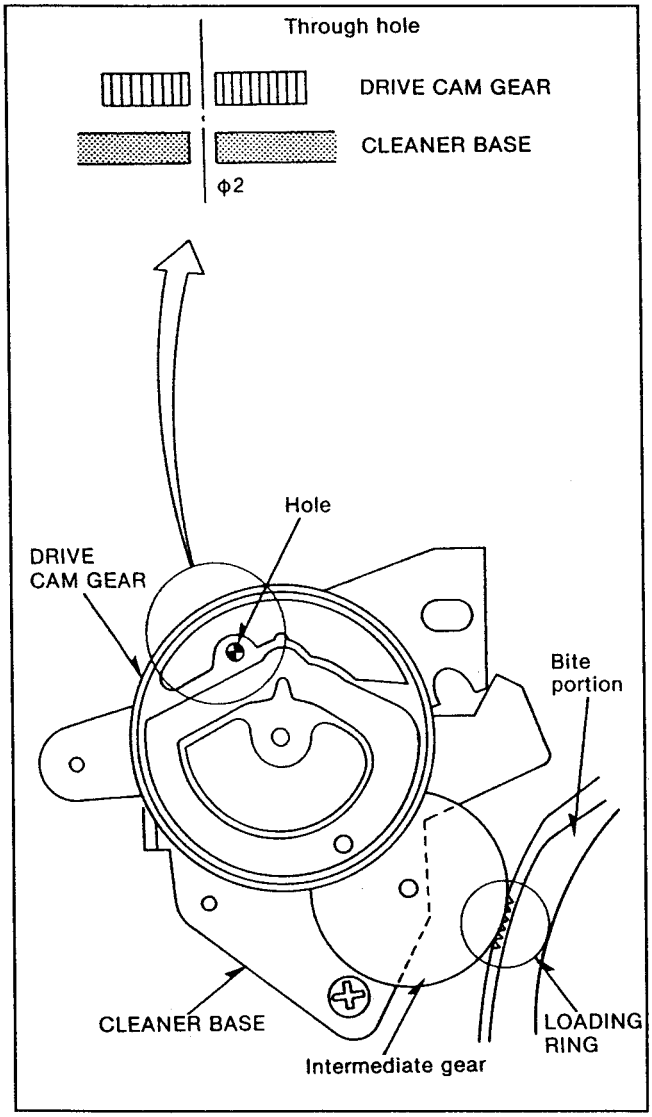

Fig. 6-34-3

6-35. AC HEAD CLEANER PAD REPLACEMENT

(Removal)

1. Remove the E-ring and pull out the cleaner arm as shown in Figure 6-35-1.
2. Remove the two cleaner caps and pull out the two cleaner pads as shown in Figure 6-35-1.

(Installation)

1. Install the cleaner pad following the previous steps in reverse order.

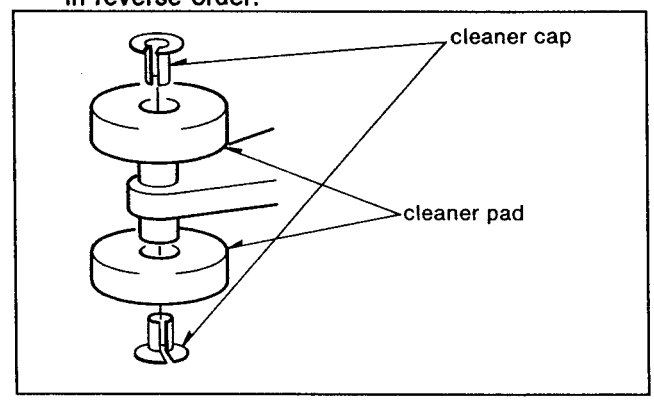

Fig. 6-35-1

ORDER NO. VQS0281-4
D5

Panasonic

D-3 1/2" DIGITAL

STUDIO VTR

AJ-D350-P/E

NTSC/PAL

Operating Instructions & Service Manual

V. 5-0

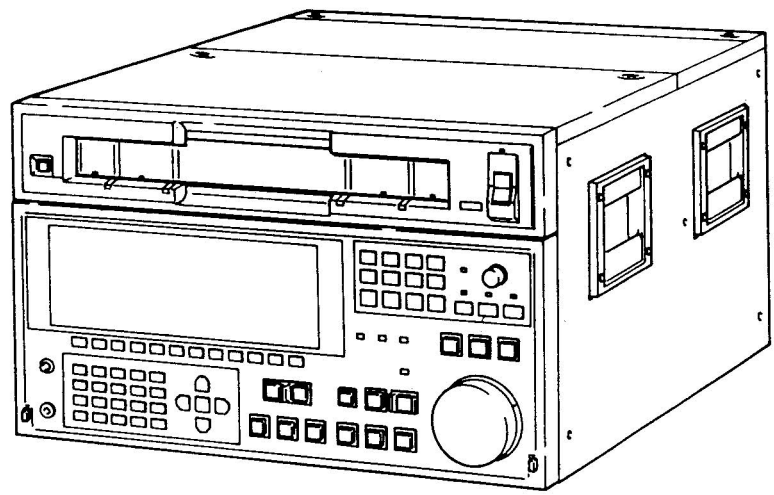

© 1995 Matsushita Electric Corporation of America.
All rights reserved. Unauthorized copying and distribution is a violation of law.

Broadcast Systems

FILE NO. VSD9106M001-5

Service Manual

Electrical
Adjustments

Panasonic
Broadcast Systems

Electrical Adjustment

NTSC

Panasonic
Broadcast Systems

RECOMMEND TEST AND SERVICE EQUIPMENT

PART No	NAME	REMARK
1910 or TSG170D	DIGITAL COMPOSITE SIGNAL GENERATOR	TEKTRONIX
1410	COMPOSITE SIGNAL GENERATOR	TEKTRONIX
2467B	400MHz OSCILLOSCOPE	TEKTRONIX
1750	SCH METER	TEKTRONIX
520A	VECTOR SCOPE	TEKTRONIX
	DIGITAL VOLT METER	
	FREQUENCY COUNTER	
	VTVM	FREQUENCY BAND WIDE 4Hz ~ 500KHz
	DIGITAL MULTI METER	
	DISTORTION METER	
HP8591A	SPECTRUM ANALYZER	HEWLETT PACKARD
	AUDIO ANALYZER (or RC OSCILLATOR)	
TYPE 5012	DIGITAL AUDIO SIGNAL GENERATOR	PRO-BEL

Note: (1) CF OUT modification is necessary for 1910.
Please contact with TEKTRONIX for this modification.
(2) 1910 digital video out is necessary to use cross cable tool.

How to read a table for adjustment

TEST	Test Points for scope and [Location on the Board]
MODE	Set VTR this mode
TAPE	Alignment Tape portion or work tape
M.EQ	Measurement Equipment
INPUT	Input the signal to VTR specified here
ADJ.	Adjustment portion and [Location on the Board]

NTSC

1. AUDIO A/D D/A, VIDEO D/A (L1) BOARD [AUDIO SECTION]

1-1. A/D REFERENCE LEVEL ADJUSTMENT

TEST	TP302(CH1)[C2], TP305(CH2)][C3], TP312(CH3)[C5], TP315(CH4)[C7]
MODE	STOP
TAPE	
M.EQ	VTVM
INPUT	1kHz +4dBm Sinewave Signal to AUDIO IN (CH1 to CH4)
ADJ.	VR301(CH1)[B2], VR302(CH2)[B3], VR304(CH4)[B7]

4000 SERIES

<STEP 1>
MACHINE CONDITION

1. INPUT ATT SELECT SW .....+4dBm
   (on the AUDIO IN/OUT Board)
2. OUTPUT ATT SELECT SW .....+4dBm
   (on the AUDIO IN/OUT Board)
3. INPUT IMPEDANCE SW 600Ω
   (on the AUDIO IN/OUT Board)

<STEP 2>
MENU CONDITION
AUDIO IN MENU
Eelect the AUDIO INPUT LEVEL to "UNITY"
(CH1 ~ CH4 : F1 ~ F4)

<STEP 3>
1. VTVM : LINE OUT (CH1)
   LINE OUT (CH2)
   LINE OUT (CH3)
   LINE OUT (CH4)
2. Adjustment VR : VR301 (CH1)
   VR302 (CH2)
   VR303 (CH3)
   VR304 (CH4)

SPECIFICATION:
VR301, VR302 : +4dBm ± 0.05dB
VR304, VR303

<STEP 4>
1. VTVM : TP301 (CH1)
   TP302 (CH2)
   TP303 (CH3)
   TP304 (CH4)
2. Confirm that the Audio level is within the specification as shown.

SPECIFICATION : +9.30dBm ± 0.5dB

<STEP 5>
1. VTVM : TP303 (CH1)
   TP306 (CH2)
   TP313 (CH3)
   TP316 (CH4)
2. Confirm that the Audio level is within the specification as shown.

SPECIFICATION : -9.7dBm ± 0.2dB

1-2. AUDIO OUTPUT LEVEL ADJUSTMENT

TEST	LINE OUB: (CH1),(CH2),(CH3),(CH4), (MONI LCH),(MONI RCH)
MODE	STOP
TAPE	
M.EQ	VTVM
INPUT	1kHz +4dBm Sinewave Signal to AUDIO IN
ADJ.	VR601(CH1)[F2], VR602(CH2)[G2], VR603(CH3)[I2], VR604(CH4)[J2], VR605(MONI LCH)[K2], VR606(MONI RCH)[M2]

<STEP 1>
MENU CONDITION
AUDIO IN MENU
Select the AUDIO INPUT
LEVEL to "OFF" : F7

<STEP 2>
1. VTVM : CH1 LINE OUT
   CH2 LINE OUT
   CH3 LINE OUT
   CH4 LINE OUT
   MONI LCH OUT
   MONI RCH OUT
2. Adjustment VR : VR601 (CH1)
   VR602 (CH2)
   VR603 (CH3)
   VR604 (CH4)
   VR605 (MONI LCH)
   VR606 (MONI RCH)

(SPECIFICATION)
Each CH Output Level : +4dBm ± 0.5dB

Note: If there is some noise at monitor out, please adjust L601 ~ L602, L201.

1. AUDIO A/D D/A, VIDEO D/A (L1) BOARD [VIDEO SECTION]

MENU CONDITION
VIDEO IN MENU
Select the VIDEO INPUT F3 to "DIGITAL"
VIDEO OUT SET UP MENU
Select the VIDEO STANBY OFF to "EE2"
STANBY OFF
VIDEO : EE2

1-1. VIDEO OUTPUT LEVEL ADJUSTMENT (L1 : VIDEO D/A)

TEST	VIDEO 1 OUT, VIDEO 2 OUT, VIDEO 3 OUT
MODE	EE2 (EJECT)
TAPE	
M.EQ	SCH METER (WFM MODE)
INPUT	PULSE & BAR to DIGITAL IN
ADJ.	VR1 (D/A LEVEL)[A8]

<STEP 1>

1. SCH METER : VIDEO 1 OUT
2. Adjust VR1 so that the Video level "A" is 1V ± 0.002Vp-p as shown in Figure.

<STEP 2>

1. SCH METER : VIDEO 2 OUT
   VIDEO 3 OUT
2. Confirm that the Video level "A" is 1V ± 0.002Vp-p.

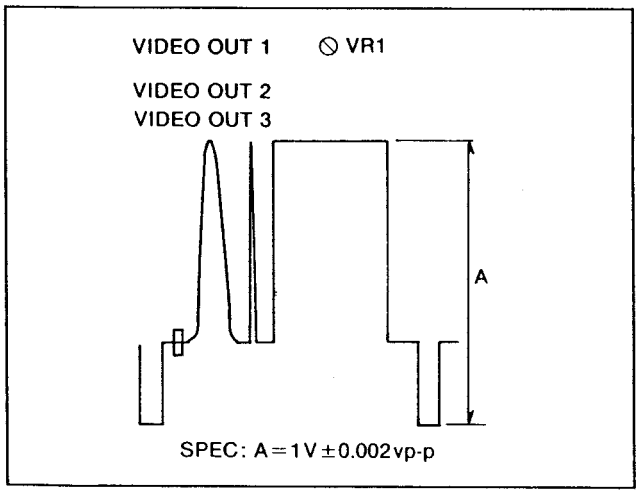

1-2. VIDEO OUTPUT FREQUENCY ADJUSTMENT (1) (L1 : VIDEO D/A)

TEST	VIDEO 1 OUT, VIDEO 2 OUT, VIDEO 3 OUT
MODE	EE2 (EJECT)
TAPE	
M.EQ	SCH METER (WFM MODE)
INPUT	DIGITAL H SWEEP to DIGITAL IN
ADJ.	VR2 [L8]

<STEP 1>

1. SCH METER : VIDEO 1 OUT
2. Adjust VR2 so that the Frequency Response is flat as shown in Figure.

<STEP 2>

1. SCH METER : VIDEO 2 OUT
   VIDEO 3 OUT
2. Confirm that the Frequency Response is flat as shown in Figure.

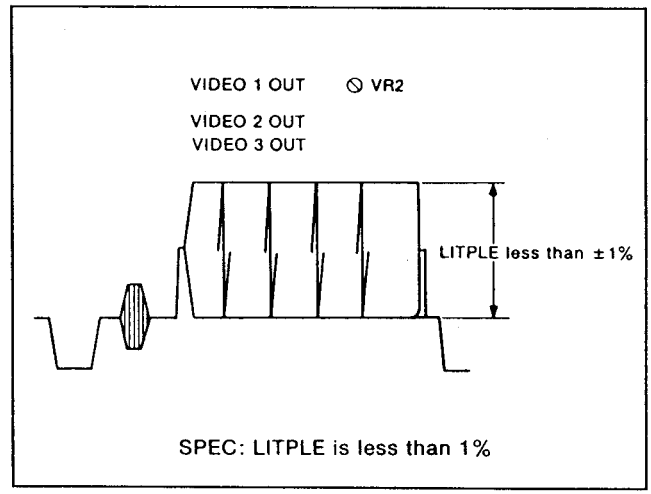

1-3. VIDEO OUTPUT FREQUENCY ADJUSTMENT (2) (L1 : VIDEO D/A)

TEST	VIDEO 1 OUT
MODE	EE2 (EJECT)
TAPE	
M.EQ	VECTOR SCOPE
INPUT	DIGITAL COLOR BAR to DIGITAL IN
ADJ.	VR2[L8]

<STEP 1>

1. VECTOR SCOPE : VIDEO 1 OUT
2. Adjust VR2 so that the each vector is in center the scale of Vector Scope.

<STEP 2>

1. Confirm that the each vector position is in the box of vector scope when put back the L1 board into the VTR.

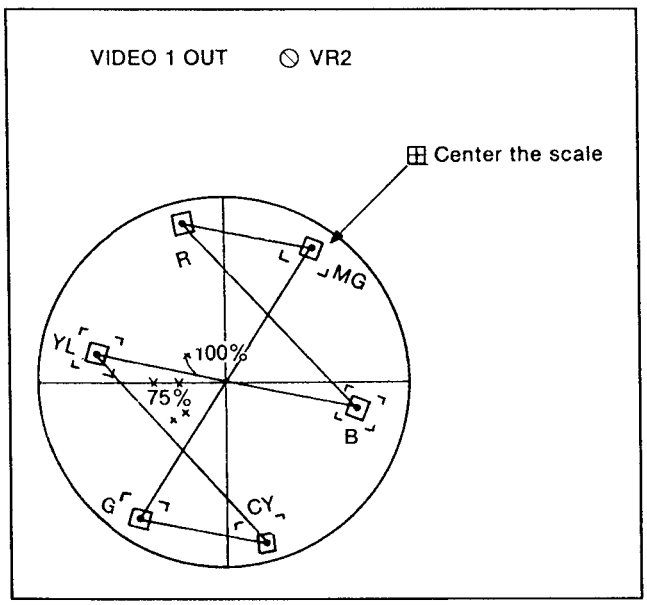

1-4. VIDEO OUTPUT DC LEVEL ADJUSTMENT (L1 : VIDEO D/A)

TEST	TP4[J8]
MODE	EE2 (EJECT)
TAPE	
M.EQ	OSCILLOSCOPE
INPUT	DIGITAL COLOR BAR to DIGITAL IN
ADJ.	VR4(CLAMP DC LEV)[L7]

<STEP 1>

MACHINE CONDITION

Connect the 75Ω termination to VIDEO 1 OUT.

<STEP 2>

1. SCOPE : TP4
2. Adjust VR4 so that the Pedestal DC level is 0V ± 20mV as shown in Figure.

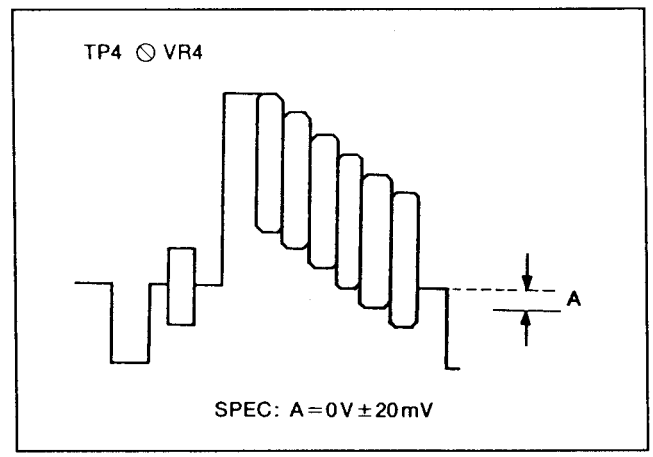

1-5. CHARACTER LEVEL ADJUSTMENT (L1 : VIDEO D/A)

TEST	VIDEO 3 OUT (SUPER)
MODE	EE2 (EJECT)
TAPE	
M.EQ	SCH METER (WFM MODE)
INPUT	DIGITAL COLOR BAR to DIGIRAL IN
ADJ.	VR6 (CHAR LEVEL)[J8]

<STEP 1>

1. SCH METER : VIDEO 3 OUT
2. Adjust VR6 so that the Character level "A" is 80IRE ± 5IRE as shown in Figure. NTSC=571mV ± 35mV.

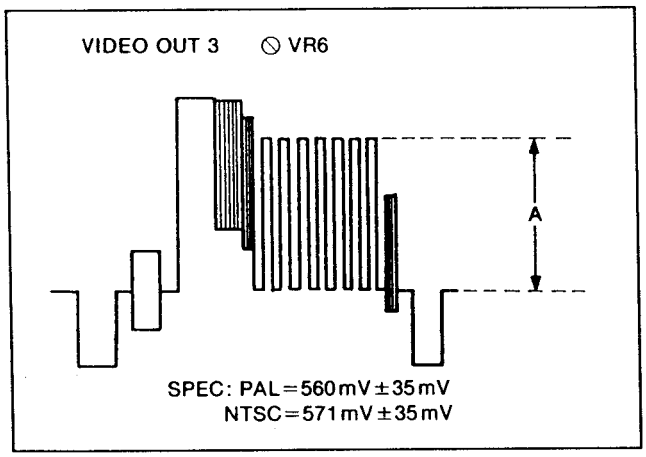

1-6. WFM OUTPUT LEVEL ADJUSTMENT (L1 : VIDEO D/A)

TEST	WFM OUTPUT
MODE	EE2 (EJECT)
TAPE	
M.EQ	SCH METER (WFM MODE)
INPUT	DIGITAL COLOR BAR to DIGITAL IN
ADJ.	VR5 (RET V LEVEL)[L6]

<STEP 1>

MENU CONDITION
VIDEO OUT MENU : F9
Select the WFM to A INPUT

<STEP 2>

1. SCH METER : WFM OUTPUT
2. Adjust VR5 so that Input level "A" is 1V ± 0.002Vp-p as shown in Figure.

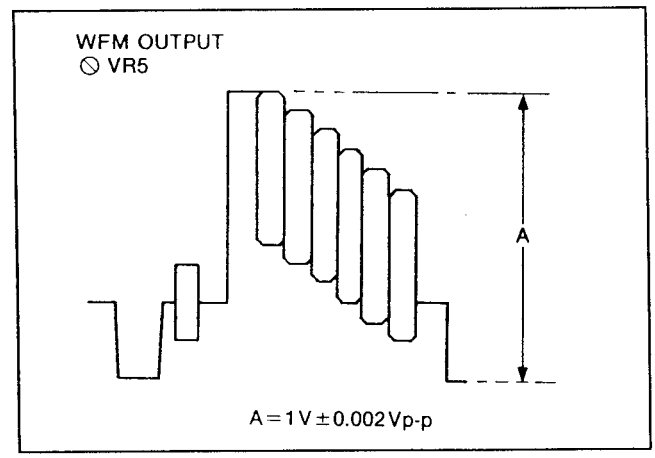

<STEP 3>

MENU CONDITION
VIDEO OUT MENU : F9
Select the WFM to "OUTPUT"

<STEP 4>

1. SCH METER : WFM OUTPUT
2. Confirm that the Output level "A" is 1V ± 0.002Vp-p as shown in Figure.

Refer to above Figure in <STEP 2>

4. VIDEO PROCESS (L4) BOARD

Adjustment with this section, perform after completed adjustment with L1 section.

MENU CONDITION 1

AUDIO IN MENU
Select the VIDEO INPUT F3 to "ANALOG"
VIDEO OUT SET UP MENU
Select the VIDEO STANBY OFF to "EE2"
STANBY OFF
VIDEO : EE2

MENU CONDITION 2
TEST MENU
VIDEO FUNCTION
Press the SCH F10 Key on the Front Panel and display the OUT REF SCH METER.

MACHINE CONDITION (SET UP CONDITION 1)

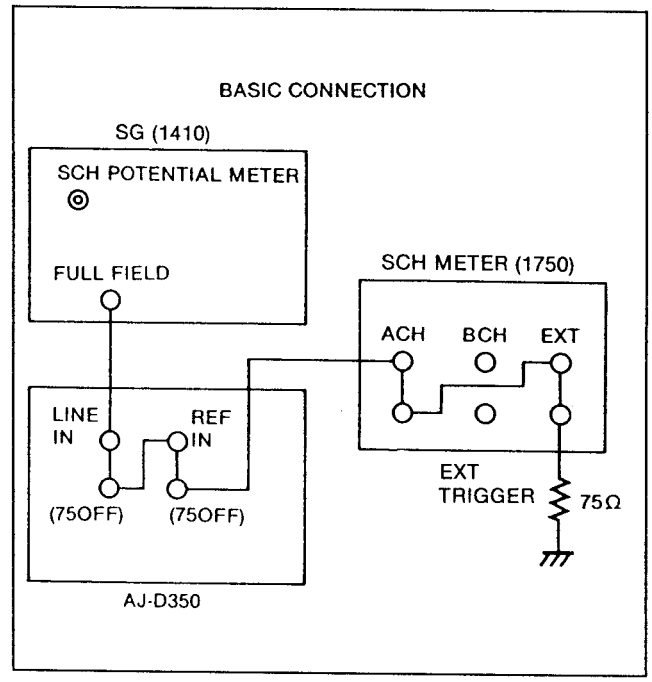

ADJUSTMENT SECTION

4-7. SCH METER ADJUSTMENT
4-9. REF CF DETECTION (3) ADJUSTMENT
4-6. REF SCH ADJUSTMENT

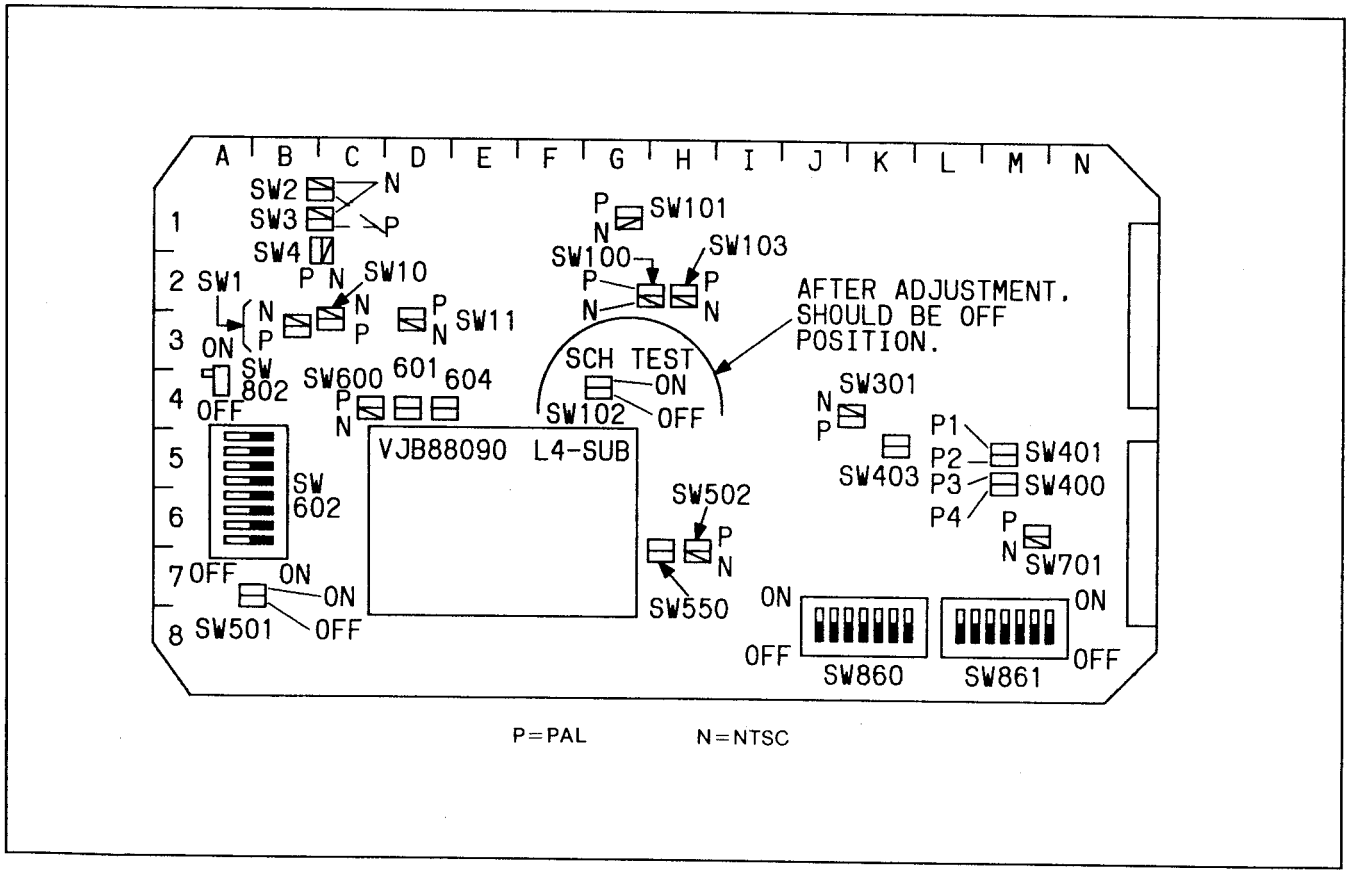

MACHINE CONDITION (SET UP CONDITION 2)

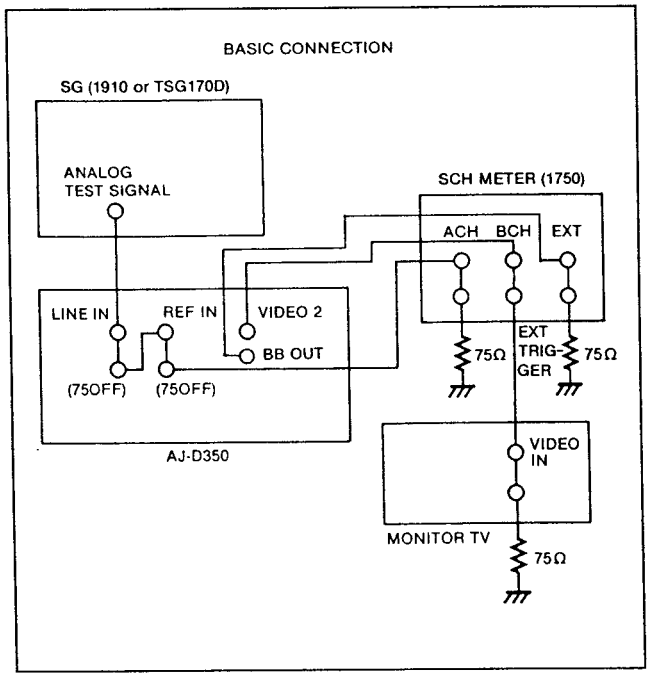

ADJUSTMENT SECTION

4-11. SYS SC PHASE ADJUSTMENT
4-12. SYS SC PHASE (2) ADJUSTMENT

MACHINE CONDITION (SET UP CONDITION 3)

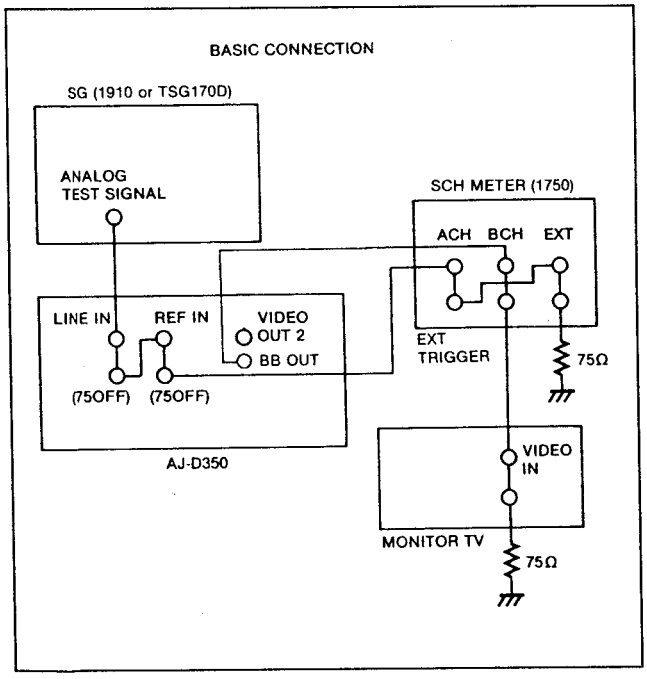

ADJUSTMENT SECTION

4-13. BB OUT SYNC LEVEL ADJUSTMENT
4-14. BB OUT SC PHASE ADJUSTMENT
4-15. BB OUT SCH ADJUSTMENT
4-16. BB OUT H PHASE (1) ADJUSTMENT
4-17. BB PIT H PHASE (2) ADJUSTMENT
4-18. BB OUT BURST LEVEL ADJUSTMENT
4-19. BB OUT BURST POSITION & WIDTH ADJUSTMENT

4-1. BF PULSE POSITION ADJUSTMENT (L4 : VIDEO PROCESS)

TEST	TP9[I1], TP1[I3], TP3[G3]
MODE	EE2 (EJECT)
TAPE	
M.EQ	OSCILLOSCOPE
INPUT	75% COLOR BAR to VIDEO IN and REF VIDEO IN
ADJ.	VR1 (VF POS)[F3]

8000 SERIES

<STEP 1>

1. SCOPE : TP9
2. Confirm that the DC voltage is 2.25 ± 0.1V DC.

<STEP 2>

1. SCOPE CH1 : TP1
   CH2 : TP3
2. Adjust VR1 so that the BF pulse is centered on the burst signal as shown in Figure.

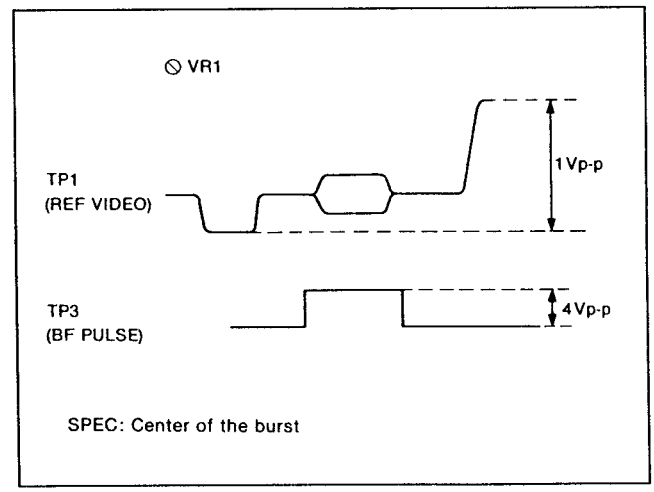

4-2. SH PULSE POSITION ADJUSTMENT (L4 : VIDEO PROCESS)

TEST	TP1[I3], TP4[G3]
MODE	EE2 (EJECT)
TAPE	
M.EQ	OSCILLOSCOPE
INPUT	ANALOG 75% COLOR BAR to VIDEO IN and REF VIDEO IN
ADJ.	VR2 (SH POS)[F3]

8000 SERIES

<STEP 1>

1. SCOPE CH1 : TP1
   CH2 : TP4
2. Adjust VR2 so that the SH pulse is located at center of the burst signal as shown in Figure.

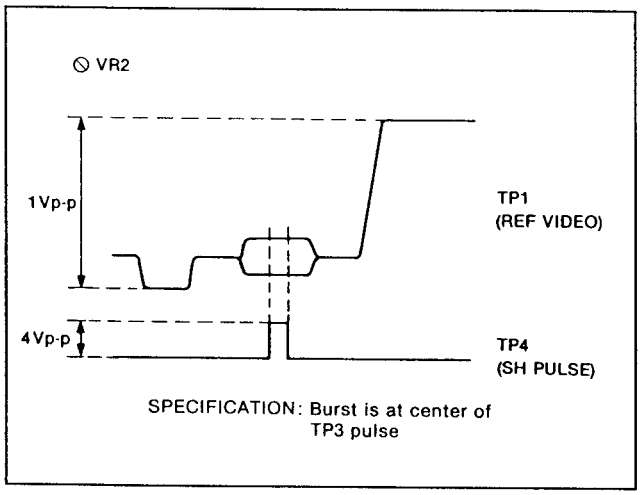

SPECIFICATION: Burst is at center of TP3 pulse

4-3. REF PLL ADJUSTMENT (L4 : VIDEO PROCESS)

TEST	TP6[I2]
MODE	EE2 (EJECT)
TAPE	
M.EQ	OSCILLOSCOPE
INPUT	ANALOG 75% COLOR BAR to VIDEO IN and REF VIDEO IN
ADJ.	C95 (REF CLK FREQ)[I1]

8000 SERIES

<STEP 1>

1. SCOPE CH1 : TP6
2. Adjust C95 so that the DC voltage is 0 ± 0.1V DC.

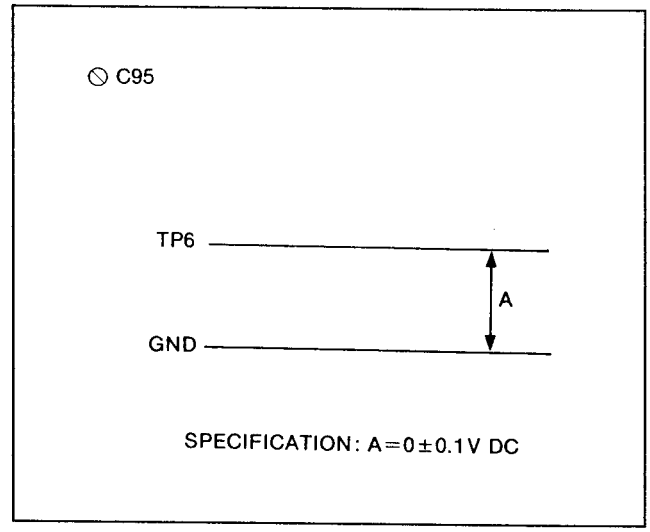

SPECIFICATION: A=0±0.1V DC

4-4. REF CF DETECTION ADJUSTMENT (1) (COARSE ADJ.) (L4 : VIDEO PROCESS)

TEST	TP5[H2]
MODE	EE2 (EJECT), SW102 (SW TEST)[D6] is ON
TAPE	
M.EQ	OSCILLOSCOPE
INPUT	ANALOG COLOR BAR to VIDEO IN and REF VIDEO IN
ADJ.	VR102 (LEVEL DET)[L2]

8000 SERIES

<STEP 1>

1. Confirm that the jumper SW102 is set to ON side.
2. SCOPE CH1 : 1410 or 1910 CF OUT
   CH2 : TP5
3. Adjust VR102 so that the CF Pulse rise on head portion of color frame 4. This adjustment is coarse adjustment. The next "REF CF DETECTION ADJUSTMENT (2)" should be adjusted.
   SW102 is set to OFF position after next adjustment is completed.

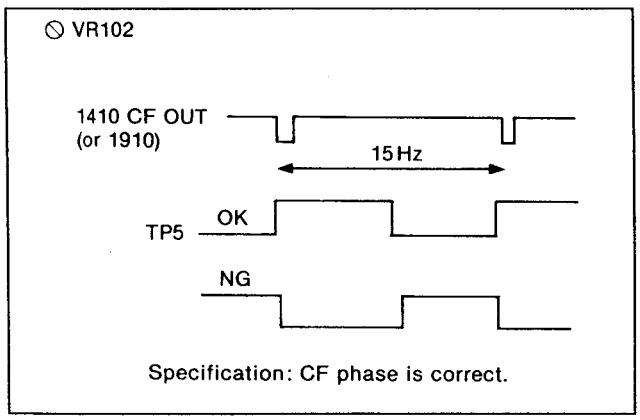

Note: 1910 needs CF out modification.
Please contact with TEKTRONIX for this modification.

4-5. REF CF DETECTION ADJUSTMENT(2) (FINE ADJ.)(L4 : VIDEO PROCESS)

TEST	TP101[L3], SW100[L3]
MODE	EE2(EJECT), SW102(SCHETEST)[D6] is ON
TAPE	
M.EQ	OSCILLOSCOPE
INPUT	75% COLOR BAR to VIDEO IN and REF VIDEO IN
ADJ.	VR102 (LEVEL DET)[L2]

8000 SERIES

<STEP 1>

1. SCOPE CH1 : TP101
   CH2 : SW100 Jumper side
2. Adjust VR102 so that the rising edge of the TP101 is at center of the High or Low period of 3.58MHz pulse at SW100 jumper side.
3. The upper of the drawing shows the trigger is stable and lower of it shows the trigger is unstable.
4. Set SW102 to OFF side.

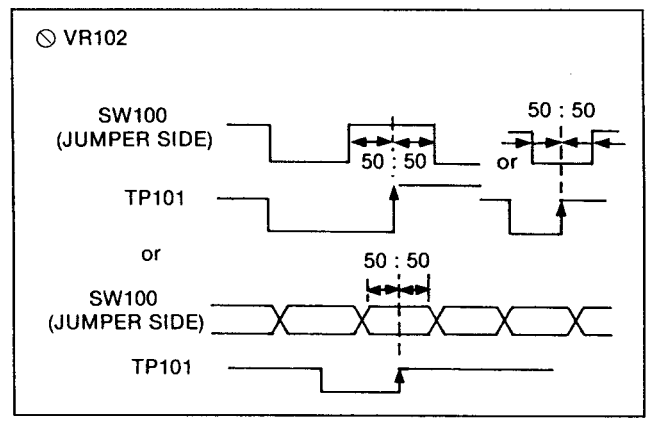

4-6. REF SCH DETECTION ADJUSTMENT (1)(L4 : VIDEO PROCESS)

TEST	TP5[H2], TP103[M3]
MODE	EE2 (EJECT), SW102 (SCH TEST)[D6] ON
TAPE	
M.EQ	OSCILLOSCOPE
INPUT	TSG170 or 1410 75% COLOR BAR to VIDEO IN and REF VIDEO IN
ADJ.	VR101 (SCH DET 2)[M2], VR100 (SCH DET 1)[L1]

8000 SERIES

<STEP 1>

1. Set SW102 (SCH TEST) to ON position.
2. Set VR100 (SCH DET 1) at center position.
3. SCOPE CH1 : TP103
   CH2 : TP5
4. Confirm that pulse signal of TP103 level is changed, when turn VR101 to clockwise or counter-clockwise.
5. Adjust VR101 so that the pulse at TP103 is centered level between minimum (0V) and maximum (2 ~ 3V).
6. If the VR100 position is incorrect. The unstable pulse appear as shown in the bottom of the figure. In this case adjust VR100 so that puse position is stable and adjust item 5 again.

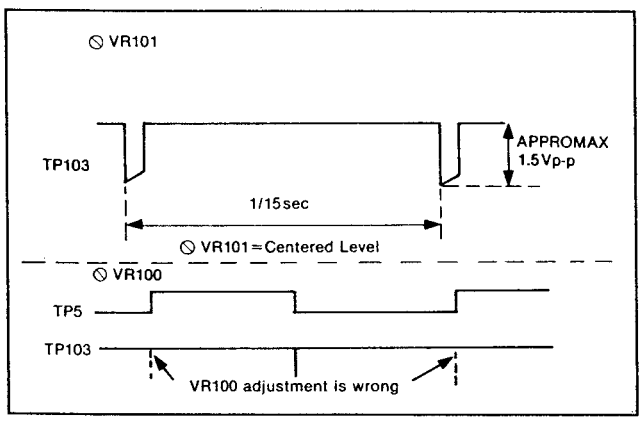

4-7. SCH METER ADJUSTMENT (L4 : VIDEO PROCESS)

TEST	OUT REF SCH METER on TEST VIDEO MENU
MODE	EE2 (EJECT
TAPE	
M.EQ	SCH METER
INPUT	1410 75% COLOR BAR to VIDEO IN and REF IN
ADJ.	VR105 (SCH GAIN [K4], VR106 (SCH OFFSET)[K4]

8000 SERIES

<STEP 1>

MACHINE CONDITION

Refer to SET UP Condition 1 at the beginning of this SECTION.(Page 6)

<STEP 2>

1. SCH METER : SCH MODE
2. Adjust the Potention Meter VR on 1410 so that the SCH phase becomes +45° at SCH METER.(Page 6)
3. Display the OUT REF SCH METER as follows TEST → F1 VIDEO → F10 SCH.
4. Adjust VR106 so that the OUT REF SCH METER displayed +45°.

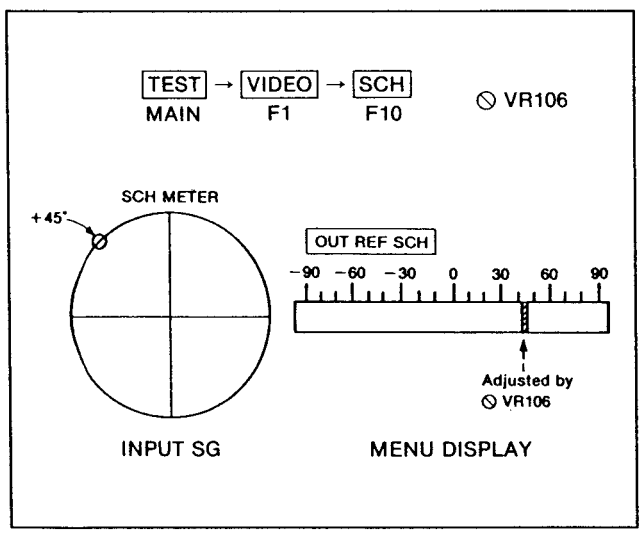

<STEP 3>

1. Adjust the Potention Meter VR on 1410 so that the SCH phase becomes -45° at SCH METER.
2. Display the OUT REF SCH METER VR as follows TEST → F1 VIDEO → F10 SCH.
3. Adjust VR105 so that the OUT REF SCH METER displayed -45°.

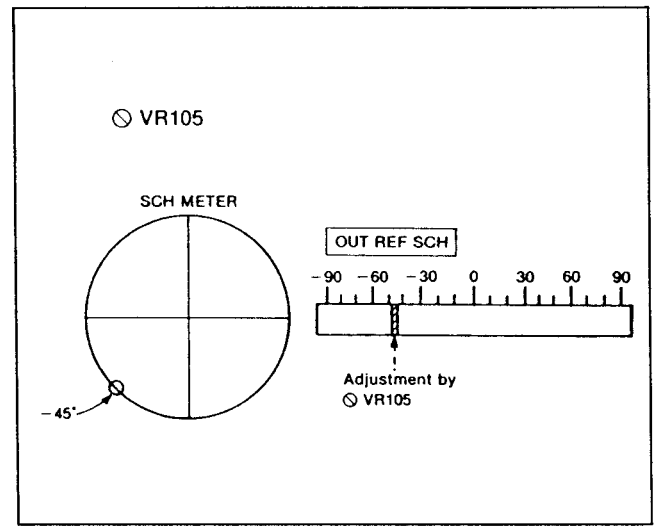

<STEP 4>

1. Re-adjust above <STEP 2> and <STEP 3> until stabilize the position of VR105 and VR106.

4-8. REF SCH DETECTION ADJUSTMENT (2)(L4 : VIDEO PROCESS)

TEST	TP104[L3], TP105[J3], TP106[J3]
MODE	EE2 (EJECT)
TAPE	
M.EQ	SCH METER (OSCILLOSCOPE)
INPUT	1410 75% COLOR BAR to VIDEO IN and REF IN
ADJ.	VR103 (SCH -L)[J2], VR104 (SCH -H)[J2]

8000 SERIES

<STEP 1>

MACHINE CONDITION

Refer to SET UP Condition 1 at the beginning of this SECTION.(Page 6)

<STEP 2>

1. SCH METER : SCH MODE
2. Adjust the Potention Meter VR on 1410 so that the SCH phase becomes +70° at SCH METER.
3. SCOPE CH1 : TP106
   CH2 : TP104
4. Measure the voltage at TP104.
5. Adjust VR104 so that the DC voltage at TP106 is TP104 ± 20mV.

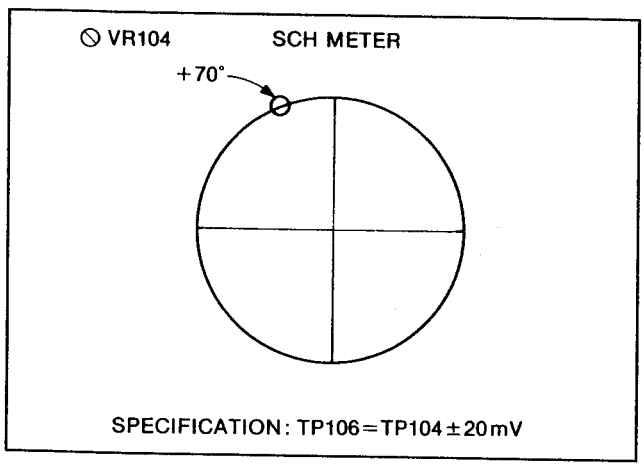

<STEP 3>

1. Adjustment the Potention Meter VR on 1410 so that the SCH phase becomes -70° at SCH METER.
2. SCOPE CH1 : TP105
   CH2 : TP104
3. Measure the voltage at TP104.
4. Adjust VR103 so that the DC voltage at TP105 is TP104 ± 20mV.

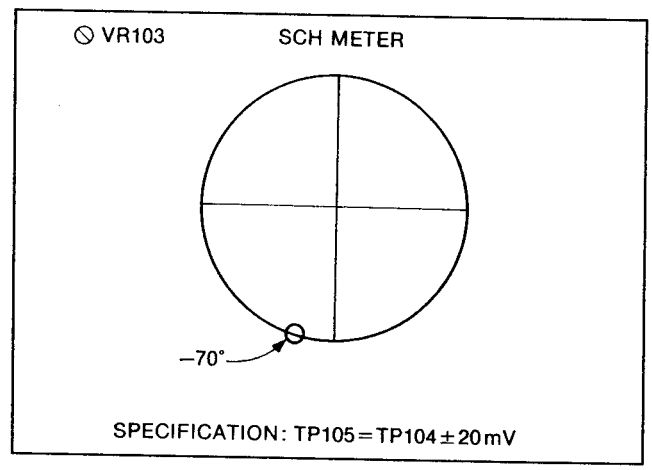

4-9. REF SCH DETECTION ADJUSTMENT (3)(L4 : VIDEO PROCESS)

TEST	OUT REF SCH METER on TEST VIDEO MENU
MODE	EE2 (EJECT)
TAPE	
M.EQ	
INPUT	ANALOG 75% COLOR BAR to VIDEO IN and REF IN, SCH = 0°
ADJ.	VR101 (SCH DET 2)[M2]

8000 SERIES

<STEP 1>

MACHINE CONDITION

Refer to SET UP Condition 1 at the beginning of this SECTION.

<STEP 2>

1. Confirm the test signal generator output SCH is 0°.
2. Turn the power OFF and ON.
3. Display the OUT REF SCH METER on TEST VIDEO MENU.
4. Adjust VR101 so that the OUT REF SCH METER displayed 0°.

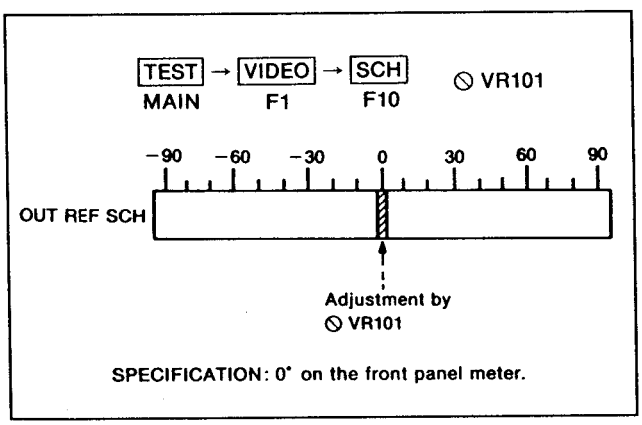

SPECIFICATION: 0° on the front panel meter.

4-10. SYS PLL ADJUSTMENT (L4 : VIDEO PROCESS)

TEST	TP108[K2]
MODE	EE2 (EJECT)
TAPE	
M.EQ	OSCILLOSCOPE
INPUT	ANALOG 75% COLOR BAR to VIDEO IN and REF IN
ADJ.	VR108[K2]

8000 SERIES

<STEP 1>

MACHINE CONDITION

Refer to SET UP Condition 1 at the beginning of this SECTION.

<STEP 2>

1. SCOPE : TP108
2. Adjust VR108 so that the DC voltage is 2.5V ± 0.005V DC.

SPECIFICATION : 2.5V ± 0.005V DC

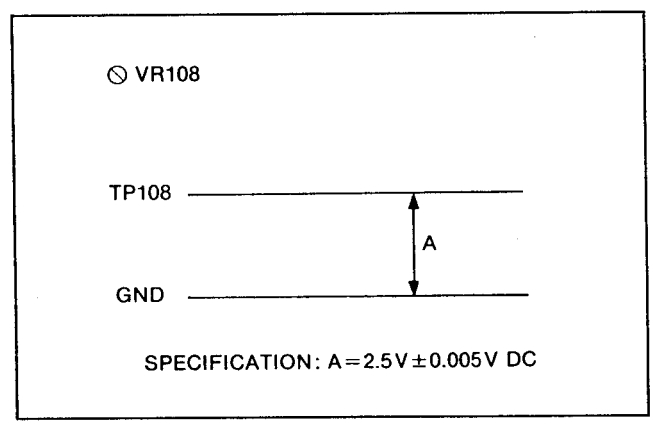

SPECIFICATION: A=2.5V±0.005V DC

4-11. BB OUT SYNC LEVEL ADJUSTMENT (L4 : VIDEO PROCESS)

TEST	BB OUT
MODE	EE2 (EJECT)
TAPE	
M.EQ	SCH METER (WFM MODE
INPUT	ANALOG 75% COLOR BAR to VIDEO IN and REF IN
ADJ.	VR202 (BB SYNC GAIN)[O3], VR203 (BB C LEVEL)[N1]

8000 SERIES

<STEP 1>

MACHINE CONDITION

Refer to SET UP Condition 3 at the beginning of this SECTION.(Page 7)

<STEP 2>

1. SCH METER : WFM mode
2. SCH METER INPUT : CHA : SG VIDEO
   CHB : BB OUT
3. Adjust VR202 so that the Sync level of BB is 286mV as shown in Figure. Confirm the sync level is same with CHA (SG Video sync level).
4. Adjust VR203 so that the carrier leak is become minimum.

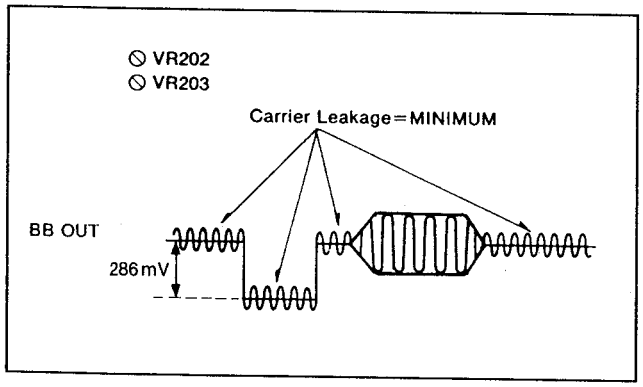

4-12. BB OUT SC PHASE ADJUSTMENT (L4 : VIDEO PROCESS)

TEST	REF VIDEO BB OUT
MODE	EE2 (EJECT)
TAPE	
M.EQ	SCH METER (WFM, SCH MODE)
INPUT	ANALOG 75% COLOR BAR to VIDEO IN
ADJ.	VR204 (BB C PHASE)[O3], VR3 (H POS 1) [G3], VR5 (H POS 2)[F1]

8000 SERIES

<STEP 1>

MACHINE CONDITION

Refer to SET UP Condition 3 at the beginning of this SECTION.(Page 7)

<STEP 2>

1. SCH METER : WFM mode, EXT trigger
2. SCH METER INPUT : CHA : SG VIDEO
   CHB : BB OUT
3. Adjust VR3 so that the H phase of BB out is same H sync phase with CHA (SG VIDEO) at center position. This is a coarse adjustment of VR3.

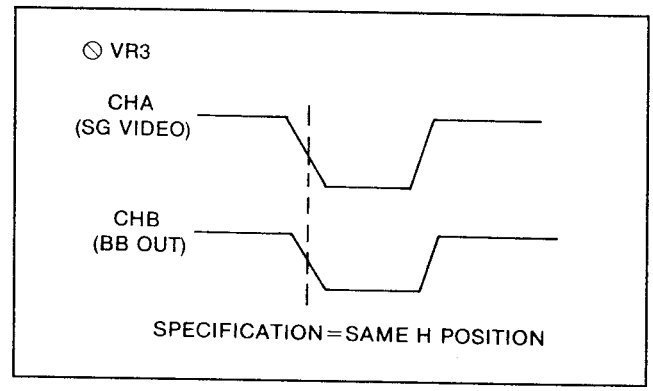

<STEP 3>

1. SCH METER : SCH mode, EXT trigger
   CHA : SG VIDEO
   CHB : BB OUT
2. Set the SCH meter CHA position at correct position. Select SCH meter to CHB.
3. Adjust VR5 so that the SCH of B.B out delayed +8° against REF IN.
4. Adjust VR204 so that the burst phase delayed +8° against burst on CHA.
5. +8° delay is caused by extention board. The SCH becomes 0°when L4 board is returned to VTR.

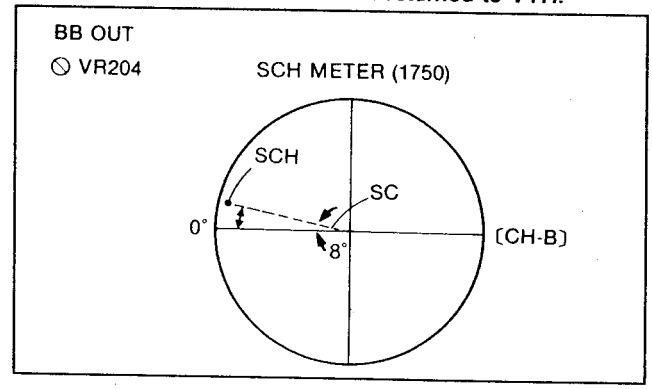

4-13. BB OUT BURST LEVEL ADJUSTMENT (L4 : VIDEO PROCESS)

TEST	BB OUT [REAR PANEL]
MODE	EE2 (EJECT)
TAPE	
M.EQ	SCH METER (WFM MODE)
INPUT	75% COLOR BAR to VIDEO IN
ADJ.	VR205 (BB BS GAIN)[O2]

8000 SERIES

<STEP 1>

MACHINE CONDITION

Refer to SET UP Condition 3 at the beginning of this SECTION.(Page 7)

<STEP 2>

1. SCH METER : WFM mode, EXT trigger
2. SCH METER INPUT : CHA : SG VIDEO
   CHB : BB OUT
3. Adjust VR205 so that the burst level is 286m Vp-p.
4. Confirm that the CHB (BB OUT) H phase and burst level on CHA (REF VIDEO).

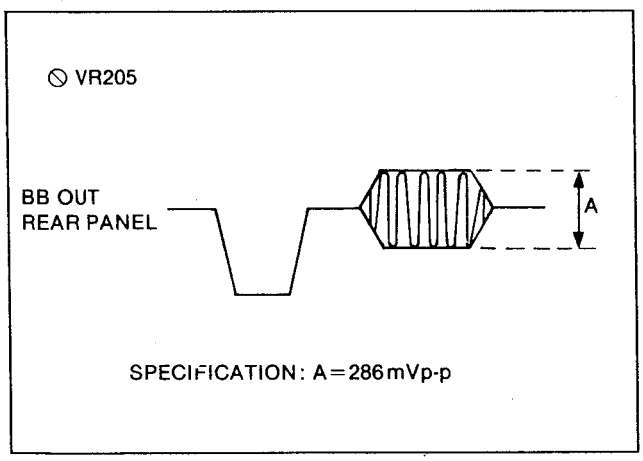

4-14. BB OUT PHASE ADJUSTMENT (2) (L4 : VIDEO PROCESS)

TEST	BB OUT (REAR PANEL)
MODE	EE2 (EJECT)
TAPE	
M.EQ	OSCILLOSCOPE
INPUT	75% COLOR BAR to VIDEO IN
ADJ.	VR200 [N1], VR201 [N1]

8000 SERIES

<STEP 1>

MACHINE CONDITION

Refer to SET UP Condition 3 at the beginning of this SECTION.(Page 7)

<STEP 2>

1. SCOPE : BB OUT
2. Adjust VR200 so that the burst start position is 5.3μsec ± 0.1μsec.

<STEP 3>

1. SCOPE : BB OUT
2. Adjust VR201 so that the burst width is 9 cycle (about 2.51μsec.

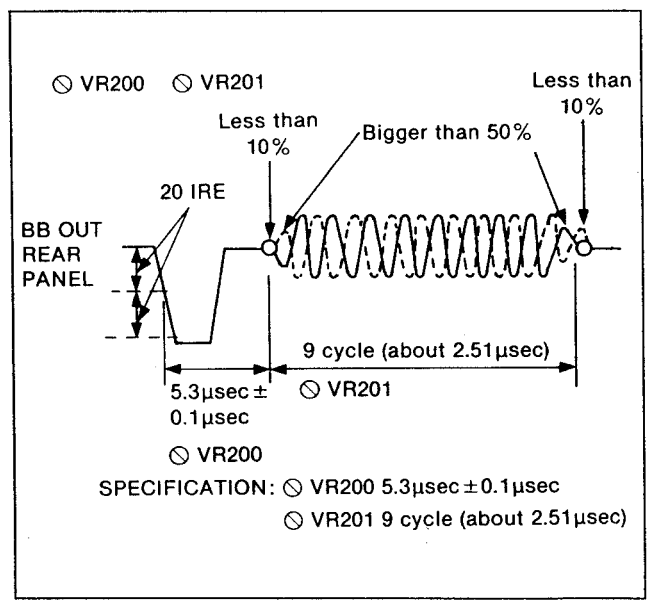

4-15. BB OUT H PHASE ADJUSTMENT (1)(L4 : VIDEO PROCESS)

TEST	BB OUT TP303[A3], TP304[B2]
MODE	EE2 (EJECT)
TAPE	
M.EQ	SCH METER (WFM MODE) OSCILLOSCOPE
INPUT	75% COLOR BAR to VIDEO IN
ADJ.	VR3 (H POS 1)[G3]

8000 SERIES

<STEP 1>

MACHINE CONDITION

Refer to SET UP Condition 3 at the beginning of this SECTION.

<STEP 2>

1. WFM : BB OUT
   EXT REF TRIGGER
2. Confirm the BB out H phase is stable.

<STEP 3>

1. SCOPE CH1 : TP303 (TRIGGER)
   SCOPE CH2 : TP304
2. Adjust VR3 so that H phase is the same phase against the H phase on CHA.

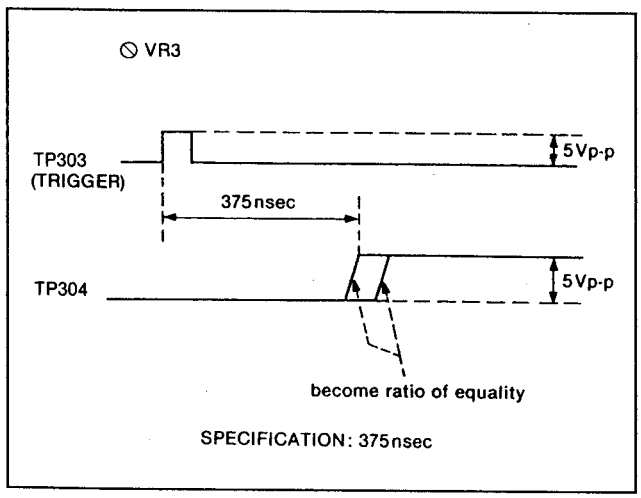

4-16. SYS SC PHASE ADJUSTMENT (L4 : VIDEO PROCESS)

TEST	VIDEO OUT 2
MODE	EE2 (EJECT)
TAPE	
M.EQ	SCH METER
INPUT	TSG273 75% COLOR BAR to VIDEO IN
ADJ.	VR107 (SYS SC OFFSET)[E2]

8000 SERIES

<STEP 1>

MACHINE CONDITION

Refer to SET UP Condition 2 at the beginning of this SECTION.

<STEP 2>

MENU CONDITION

VIDEO OUT MENU : F7
Select the SC to "UNITY" mode.

<STEP 3>

1. SCH METER : SCH : MODE
2. SCH INPUT : CHA
3. Adjust the phase VR on SCH METER so that the burst phase becomes standard position at SCH METER.

<STEP 4>

1. SCH INPUT : CHB
2. Adjust VR107 so that the burst phase becomes the same phase as REF VIDEO (CHA).

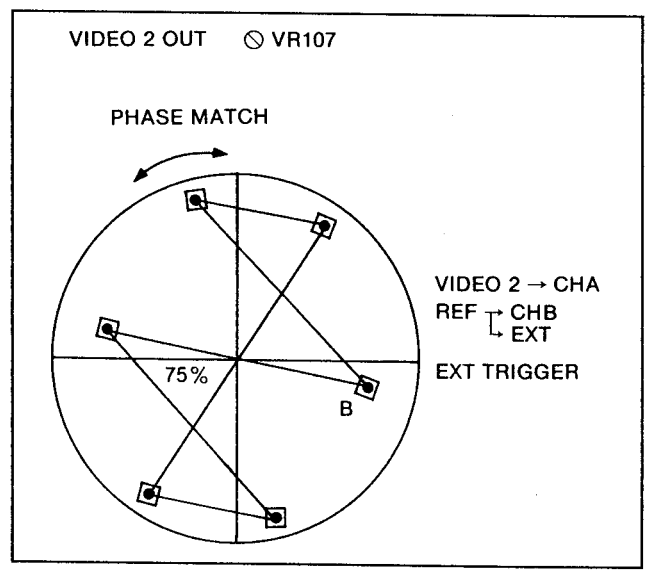

4-17. SYSTEM H PHASE (OUT REF = INCOM) ADJUSTMENT (1) (L4 : VIDEO PROCESS)

TEST	TP5[H2], TP1[I3], VIDEO OUT
MODE	EE2 (EJECT)
TAPE	
M.EQ	OSCILLOSCOPE
INPUT	75% COLOR BAR TO VIDEO IN and REF VIDEO IN
ADJ.	Confirmation only

8000 SERIES

<STEP 1>

1. Confirm that the adjustment of L2 and S9 sections are completed.

<STEP 2>

MENU CONDITION

HOME MENU SET UP
Select the OUT REFERENCE to "INCOM".

<STEP 3>

1. SCOPE CH1 : TP1
   CH2 : TP5
2. Confirm that the relation between REF VIDEO and CF pulse is as shown in Figure.

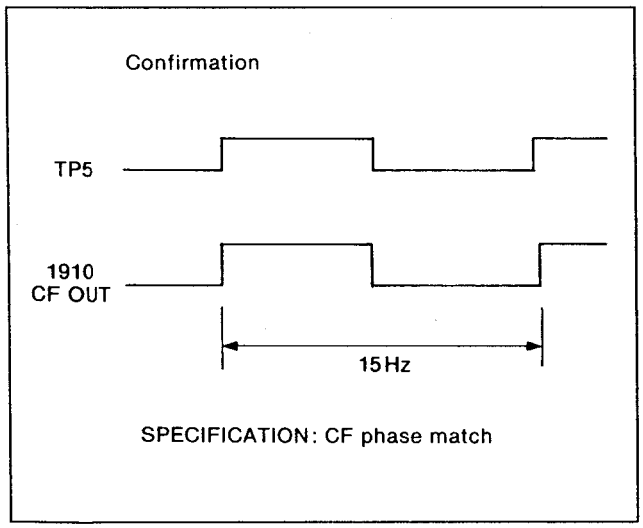

SPECIFICATION: CF phase match

4-18. SYSTEM H PHASE (OUT REF = INCOM) ADJUSTMENT (2) (L4 : VIDEO PROCESS)

TEST	VIDEO OUT
MODE	EE2 (EJECT)
TAPE	
M.EQ	SCH METER (WFM MODE)
INPUT	75%COLOR BAR to VIDEO IN and VIDEO IN
ADJ.	VR4 (1H POS)[I4] (COARSE)

8000 SERIES

<STEP 1>

1. Confirm that the adjustment with L2 and S9 sections completed.

<STEP 2>

MENU CONDITION

HOME MENU SET UP
Select the OUT REFERENCE to "INCOM".

<STEP 3>

MACHINE CONDITION

Refer to SET UP CONDITION 2 at the beginning of this SECTION.

<STEP 4>

1. SCH METER : WFM Mode
2. Adjust VR4 so that the H phase on CHB is matched REF signal (CHA).

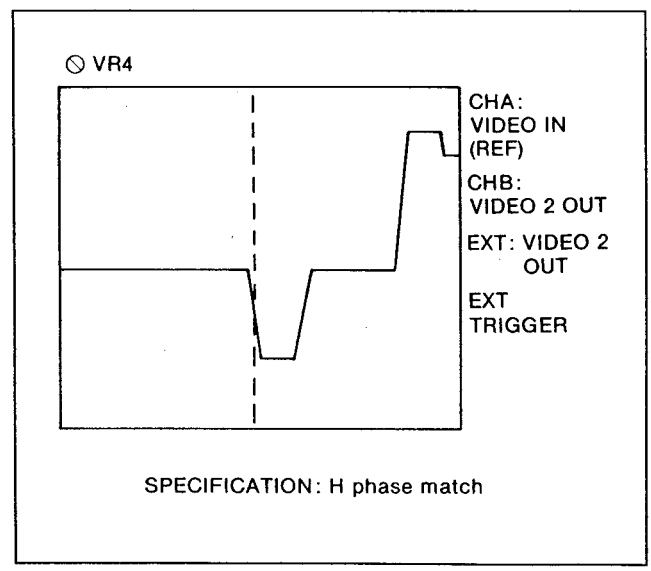

SPECIFICATION: H phase match

4-19. SYSTEM H PHASE (OUT REF = INCOM) ADJUSTMENT (3) (L4 :VIDEO PROCESS)

TEST	TP303[A3], TP304[B2]
MODE	EE2 (EJECT)
TAPE	
M.EQ	OSCILLOSCOPE
INPUT	75% COLOR BAR to VIDEO IN
ADJ.	VR4 (IH POS)[I4] (FINE)

8000 SERIES

<STEP 1>

1. Confirm that the adjustment with L2 and S9 sections completed.

<STEP 2>

MENU CONDITION

HOME MENU SET UP
Select the OUT REFERENCE to "INCOM".

<STEP 3>

MENU CONDITION

Refer to SET UP CONDITION 2 at the beginning of this SECTION.

<STEP 4>

1. SCOPE CH1 : TP303
   CH2 : TP304
2. SCOPE TRIGGER : CH1
3. Adjust VR4 so that the relation between HC signal as shown in Figure.

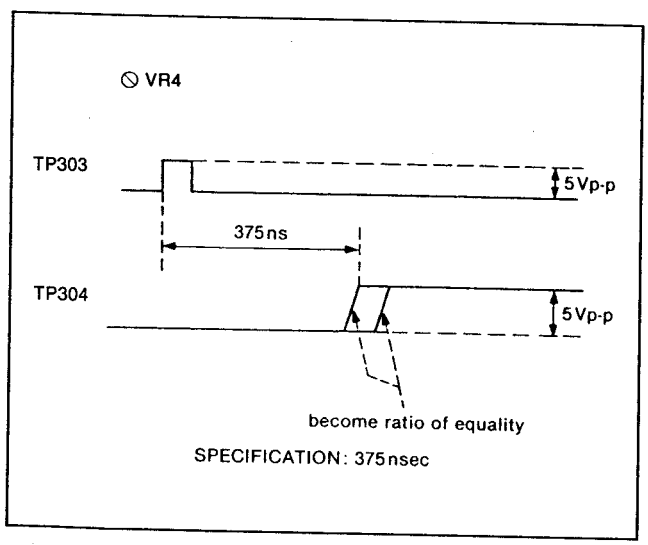

SPECIFICATION: 375nsec

4-20. DIGITAL VIDEO OUT CLOCK PHASE ADJUSTMENT (L4 : VIDEO PROCESS)

TEST	DIGITAL VIDEO OUT 25pin D-SUB
MODE	EE1
TAPE	
M.EQ	OSCILLOSCOPE
INPUT	75% COLOR BAR to VIDEO IN
ADJ.	SW860 [M8], SW861 [M8]

8000 SERIES

<STEP 1>

SCOPE CH1 : DIGITAL VIDEO OUT D-SUB 1Pin
CH2 : DIGITAL VIDEO OUT D-SUB 7Pin

<STEP 2>

Adjust SW860 and SW861 so that the clock and data phase is shown in figure.

(1) Set SW861-7bit to ON and SW860 -2bit to ON or set SW861-8bit to ON and set one of the bit of SW861 bit1 - bit5 to ON.

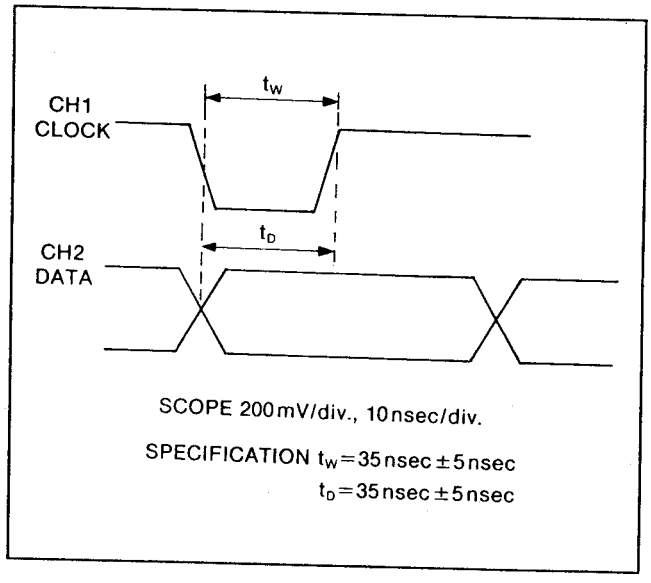

SCOPE 200mV/div., 10nsec/div.

SPECIFICATION t_W=35nsec±5nsec
t_D=35nsec±5nsec

5. REC/PLAY CH0 (S1) BOARD
REC/PLAY CH1 (S2) BOARD

Adjust procedure with S1 and S2 board the same.

MACHINE CONDITION

Set the SW51 on the L2 board to OFF as shown in Figure 1.
Turns Line and Field shuffle off.

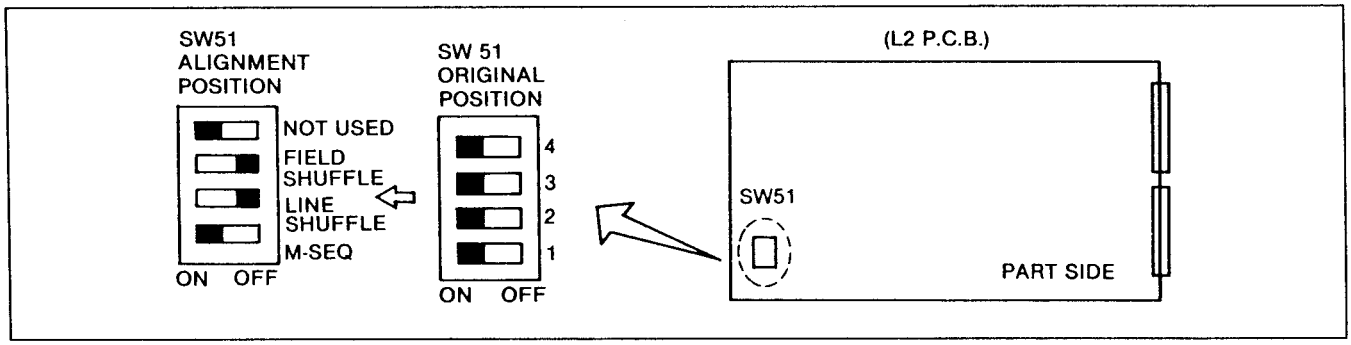

Figure 1.

1. Set the SW1, 2, 3 and 4 on the L3 P.C.B. follow the Figure 2.
2. Set the SW802 on the L4 P.C.B. follow the Figure 2.
3. Confirm that the 5 LED's are turned ON.

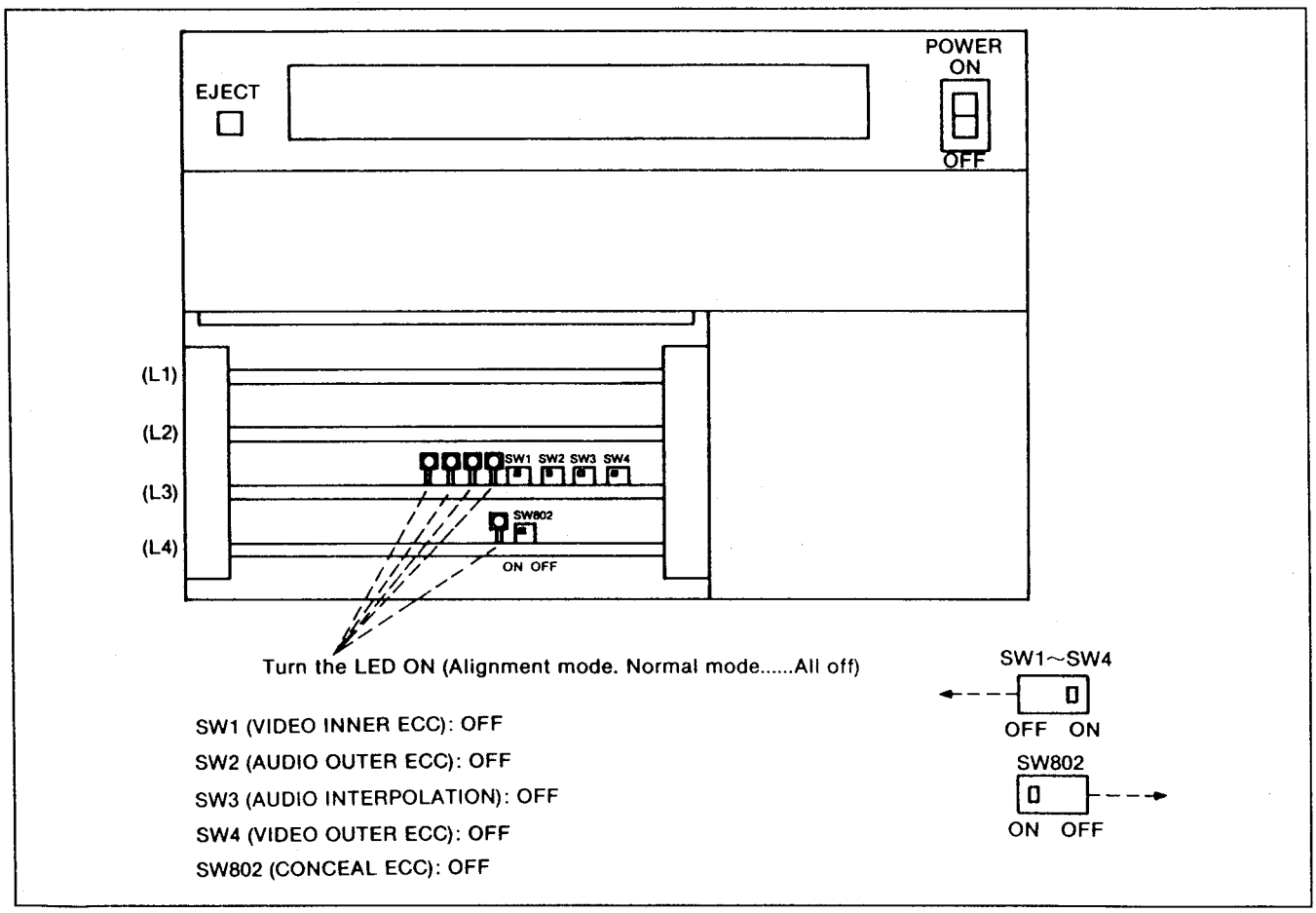

Figure 2.

Set the Dip SW's on the S1 and S2 P.C.B. follow the as shown in Figure 3.

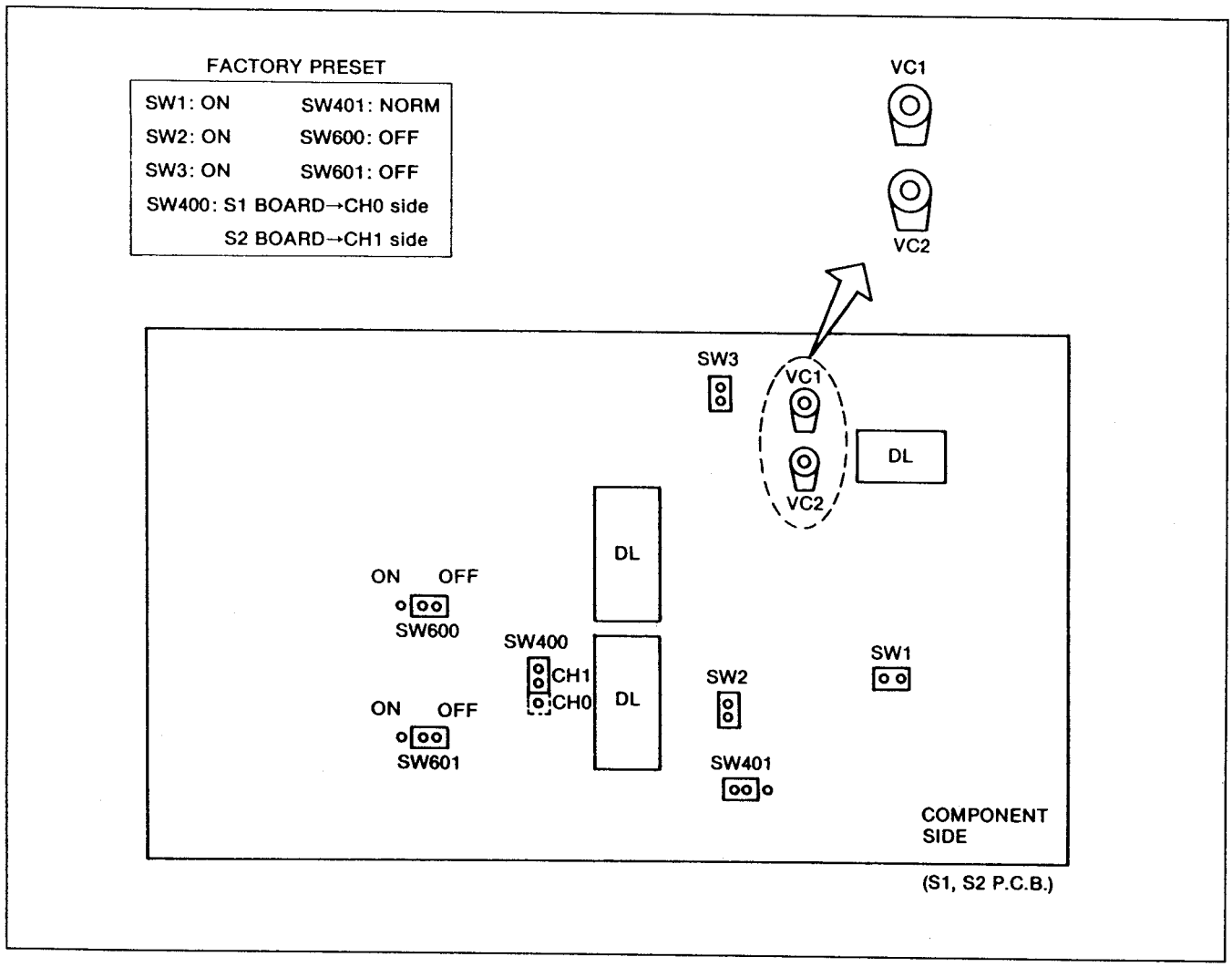

Figure 3.

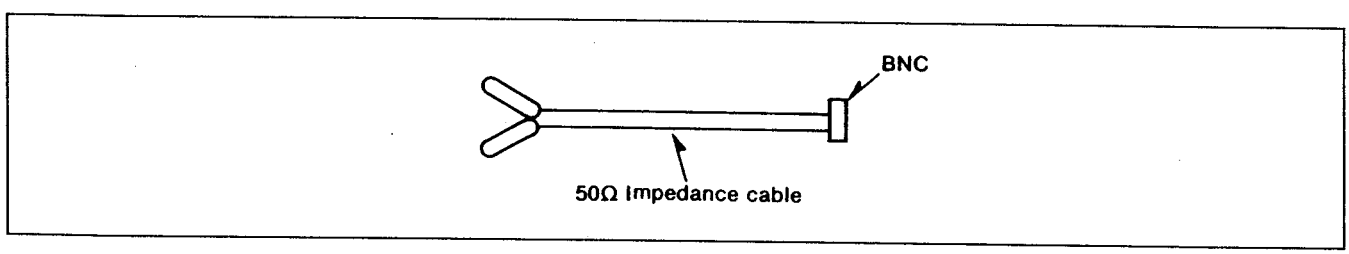

Note: 1. These VRs are not used as follows.
VR600,VR601,VR602,VR603,VR604,
VR605,VR606,VR607,VR614,VR615
2. Set the VR506, VR508 and VR509 as follows.

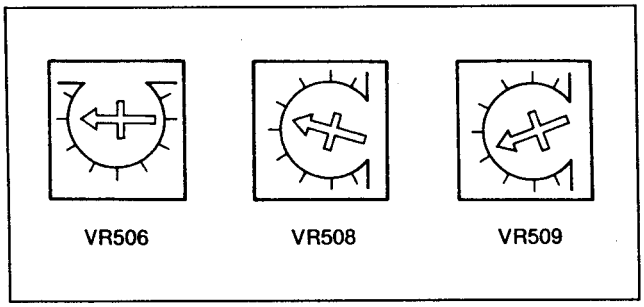

5-1. PLL ADJUSTMENT (S1 : REC/PLAY CH0) (S2 : REC/PLAY CH1)

<STEP 1>

SPEC	TP304 = 2.5V DC ± 0.05V DC
TEST	TP304[A1]
MODE	VIDEO OUT SET UP STATE EE2,STBY OFF
TAPE	
M.EQ	OSCILLOSCOPE
INPUT	75% COLOR BAR to VIDEO IN
ADJ.	

5000 SERIES

1. SCOPE : TP304
2. Set VTR into STAND BY OFF mode.
3. Confirm that the DC voltage is 2.5 ± 0.05V DC. If it is not confirm the Servo HT (Head Tape relative speed) signal on S5 board.

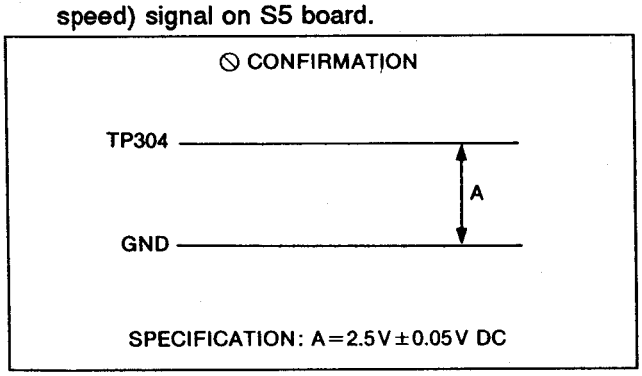

PLL ADJUSTMENT

<STEP 2>

SPEC	1.4V DC ± 0.02V
TEST	L301 Lower Side
MODE	EE2 (EJECT)
TAPE	
M.EQ	OSCILLOSCOPE
INPUT	75% COLOR BAR to VIDEO IN
ADJ.	VL300 (OSC OFFSET)[B1]

5000 SERIES

1. SCOPE : L301 Lower Side
2. Adjust VL300 (OSC OFFSET) so that the voltage is 1.4 ± 0.02V DC.

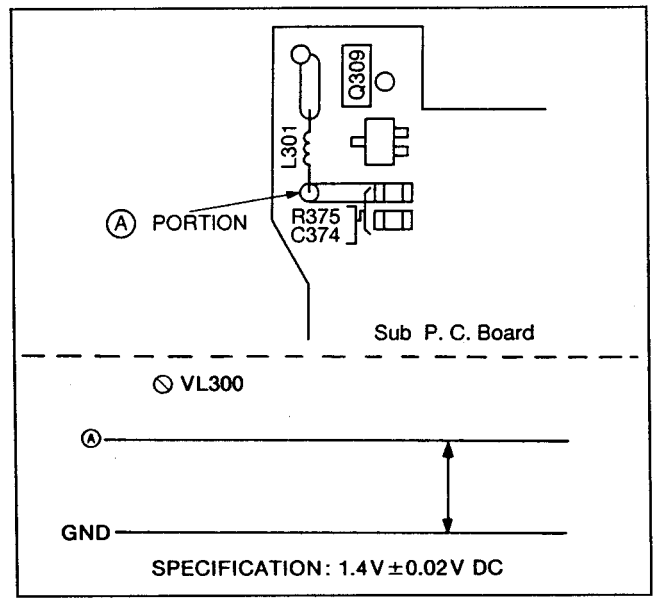

PLL ADJUSTMENT

<STEP 3>

SPEC	TP303 DC VOLT = TP302 DC VOLT
TEST	TP302 [C1], TP303 [B1]
MODE	EE2 (EJECT)
TAPE	
M.EQ	OSCILLOSCOPE
INPUT	75% COLOR BAR to VIDEO IN
ADJ.	VR300 (PLL OFFSET)[A1]

5000 SERIES

1. SCOPE CH1 : TP302
   CH2 : TP303
2. Adjust VR300 (PLL OFFSET) so that the voltage of TP302 and TP303 are same.

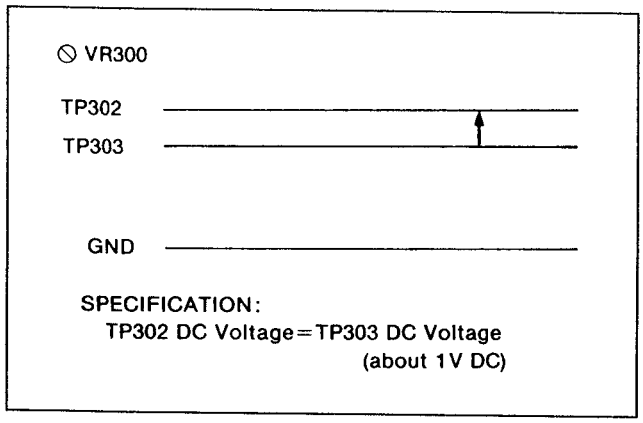

PLL ADJUSTMENT

<STEP 4>

SPEC	TP300 IS MAXIMUM PEAK TO PEAK
TEST	TP300 [B2]
MODE	TAPE mode STBY OFF
TAPE	COLOR BAR
M.EQ	OSCILLOSCOPE
INPUT	75% COLOR BAR to VIDEO IN
ADJ.	VR10 (COMP BIASE)[F1]

5000 SERIES

1. Insert an adjustment tape color bar portion.
2. Set the STBY OFF status to "TAPE" mode.

   VIDEO OUT SET UP TAPE

3. Set the VTR into STBY OFF mode.
4. SCOPE : TP300
5. Adjust VR10 (COMP BIASE) so that the data signal level is maximum.

Note: Set the 20MHz Filter of oscilloscope to OFF mode.

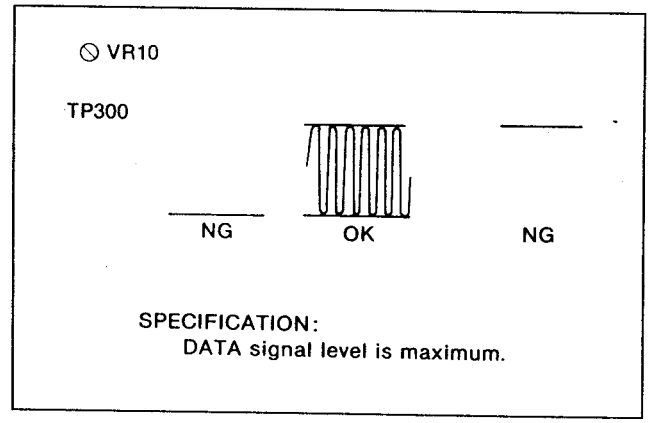

PLL ADJUSTMENT

<STEP 5>

SPEC	TP302 DC VOLTAGE = TP303 DC VOLTAGE
TEST	TP302 [B1], TP303 [B1]
MODE	TAPE mode STBY OFF
TAPE	COLOR BAR
M.EQ	OSCILLOSCOPE
INPUT	75% COLOR BAR to VIDEO IN
ADJ.	VR301 (DC BALANCE)[C1]

5000 SERIES

1. SCOPE CH1 : TP302
   CH2 : TP303
2. Adjust VR301 (DC BALANCE) so that the voltage of TP302 and TP303 are same.

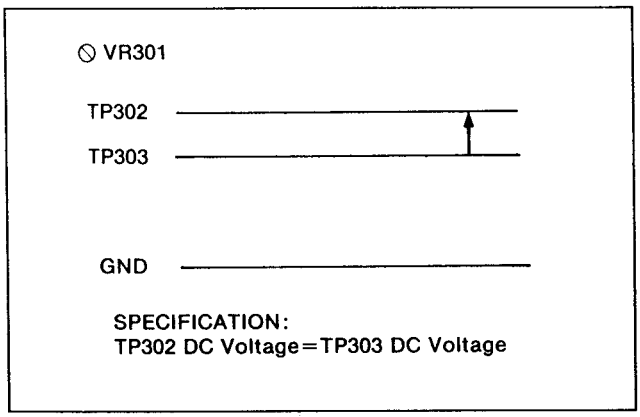

PLL ADJUSTMENT

<STEP 6>

SPEC	TP301 CLOCK IS LOCKED WITH TP300
TEST	TP301 [B2], TP300 [B2]
MODE	EE2 (EJECT)
TAPE	
M.EQ	400MHz OSCILLOSCOPE
INPUT	75% COLOR BAR to VIDEO IN
ADJ.	CONFIRMATION ONLY

5000 SERIES

1. Set the STBY OFF status to "EE2" mode.

   VIDEO OUT SET UP

2. SCOPE CH1 : TP301/TPG300
   CH2 : TP300 --- TRIGGER
3. SCOPE : 500mV/AC
   SETTING : SWEEP = 10nsec/div
4. Confirm that the DATA signal and CLOCK signal are frequency locked.

Note: Set the 20MHZ Filter of oscilloscope to OFF mode.

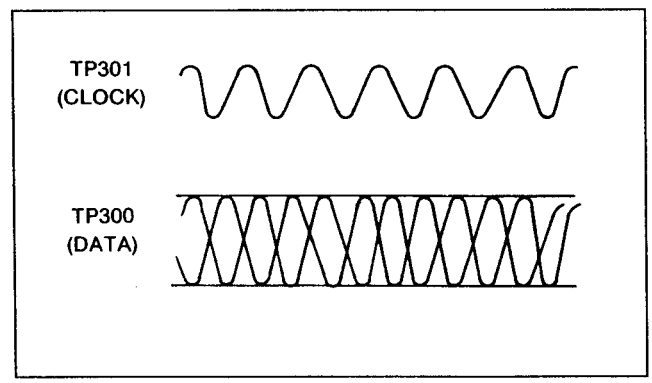

5-2. ENVELOPE MAX ADJUSTMENT (S1 : REC/PLAY CH0) (S2 : REC/PLAY CH1)

SPEC	RF ENVELOPE IS MAXIMUM
TEST	TP8[E2],P3-B22(RIGHT SIDE) of Extension Board
MODE	VAR (X1)
TAPE	SHUFFLING OFF 75% COLOR BAR
M.EQ	OSCILLOSCOPE
INPUT	
ADJ.	Adj. KNOB (on the Front Panel), AT HEIGHT

5000 SERIES

<STEP 1>

MENU CONDITION
TEST SERVO AT HEIGHT

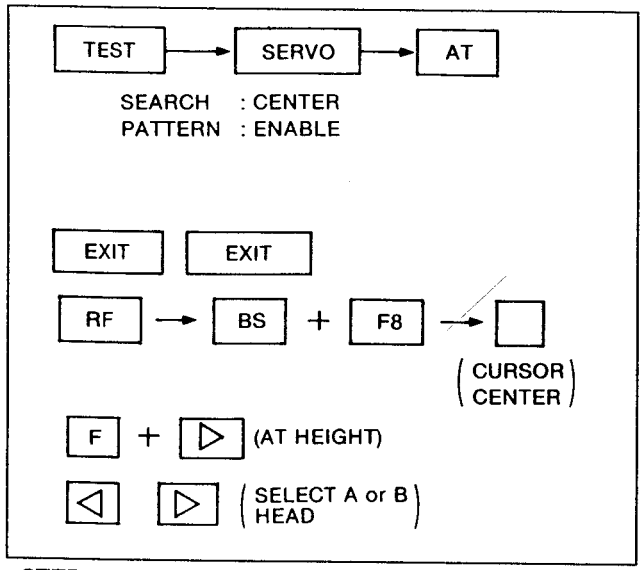

<STEP 2>

1. Playback a shuffling off 75% Color bar Alignment Tape on VAR X1 mode.
2. Adjust the Adj. KNOB VR on the Front Panel so that the Envelope is maximum.

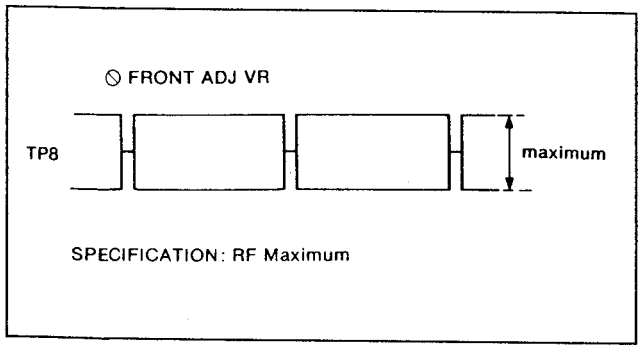

5-3. AB DC BAL ADJUSTMENT (S1 : REC/PLAY CH0) (S2 : REC/PLAY CH1)

SPEC	CHA DC = DC
TEST	TP1[H3], TP400[F4]
MODE	VAR (X1)
TAPE	SHUFFLING OFF 75% COLOR BAR ALIGNMENT TAPE
M.EQ	OSCILLOSCOPE
INPUT	
ADJ.	VR1 (A/B DC BAL)[H1]

5000 SERIES

<STEP 1>

1. SCOPE CH1 : TP1 : TPG1
   CH2 : TP400
2. SCOPE CH1 : 50mV/DC 50Ω
   CH2 : 5V/DC
3. SCOPE MODE : CH0P
4. SCOPE TRIG : CH4
5. SCOPE SWEEP : A = 2ms/div
   B = 50μS/div
6. Adjust VR1 so that the Envelope is as shown in Figure.

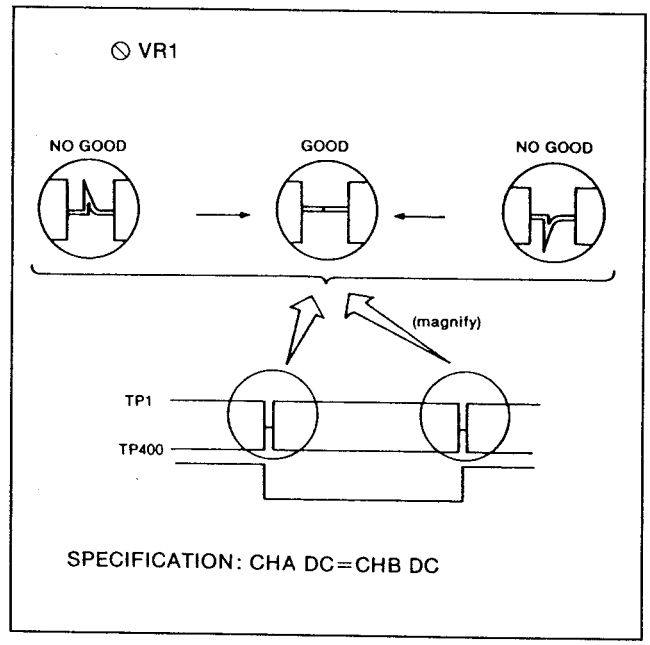

5-4. ENVELOPE DETECTION ADJUSTMENT (S1 : REC/PLAY CH0) (S2 : REC/PLAY CH1)

SPEC	ENVELOPE MINIMUM DC LEVEL = 0V ± 0.2VDC ENVELOPE MAX. = 2Vp-p ± 0.2V
TEST	TP502 [H4], TP400 [F4], TP8 [E2]
MODE	STILL
TAPE	SHUFFLING OFF 75% COLOR BAR ALIGNMENT TAPE
M.EQ	OSCILLOSCOPE
INPUT	
ADJ.	VR2(A/B GAIN BAL)[H1], VR500(ENV GAIN)[I4], VR501 (ENV OFFSET) [I4]

5000 SERIES

<STEP 1>
MENU CONDITION

TEST SERVO AT

Set the [PATTERN] to "FIX".

SEARCH = CENTER
PATTERN = FIX

<STEP 2>
1. SCOPE CH1 : TP502
   SCOPE CH2 : TP400
2. SCOPE SETTING : 1V/DC
   SCOPE CH2 : 5V
3. SCOPE MODE : CH0P
   BW
4. SCOPE TRIG : CH2
5. SCOPE SWEEP : 2ms
6. Place the unit in the STILL mode.
7. Adjust VR501 so that the minimum signal level is 0V ± 0.2V as shown in Figure.

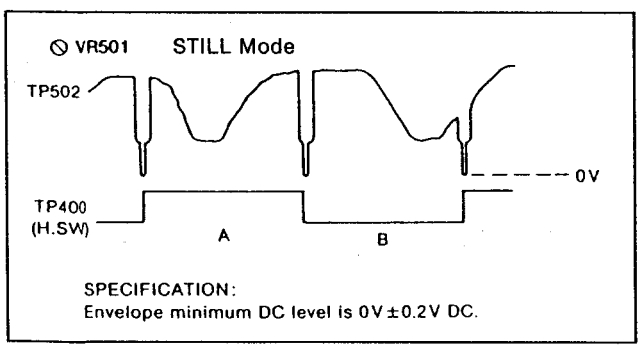

<STEP 3>
1. SCOPE CH1 : TP502
   SCOPE CH2 : TP400
2. Rotate capstan shaft by hand (CCW) and set the Envelope becomes maximum during Head Switch A portion.
3. Adjust VR500 (ENV GAIN) so that the maximum envelope level is 2V ± 0.2V.

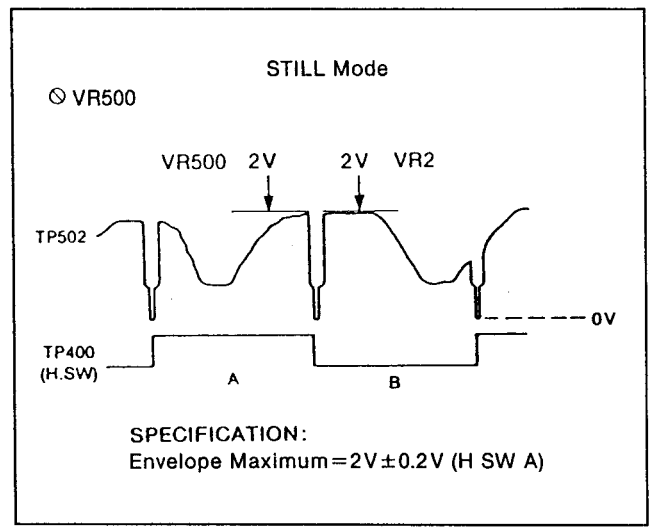

4. Rotate capstan shaft by hand (CCW) and set the Envelope becomes maximum during Head switch B portion.
5. Adjust VR2 (A/B GAIN BAL) so that the maximum envelope is 2V ± 0.2V.
6. After adjustment set the AT HEIGHT is 0.
7. After this adjustment, item 8-1 ENVELOPE DETECTION ADJUSTMENT is required.

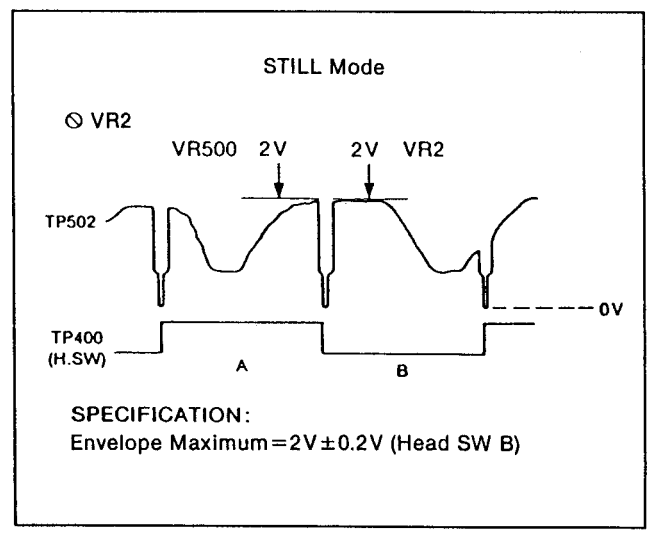

5-5. EQUALIZATION ADJUSTMENT (1)
(S1 : REC/PLAY CH0)
(S2 : REC/PLAY CH1)

Factory Preset only, skip this item after Head Replacement.

SPEC	
TEST	TP8[E2], VIDEO OUT, TP400[F4]
MODE	VAR (× 1)
TAPE	SHUFFLING OFF 75% COLOR BAR ALIGNMENT TAPE
M.EQ	SPECTRUM ANALYZER
INPUT	
ADJ.	See Below

5000 SERIES

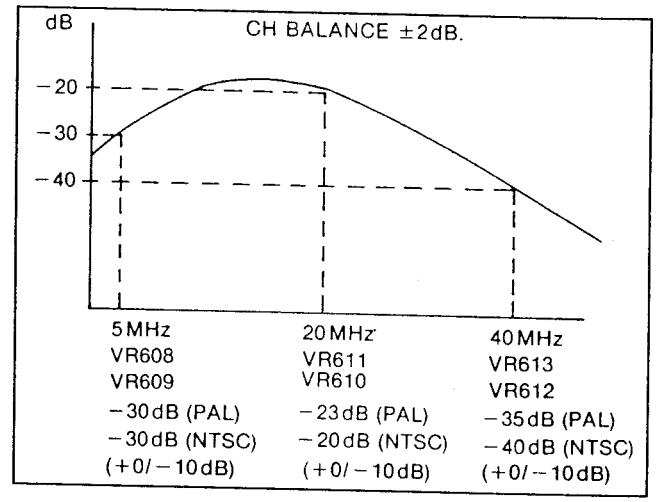

<STEP 1>

Adjustment VR.

(1) VR3 (PHASE SHIFT) -------6 division
(2) VR609 (MAG A) ----------7 division
VR608 (MAG B) ----------7 division
(3) VR613 (AFC HA) ----------5 division
VR612 (AFC HB) ----------5 division
(4) VR611 (AFC MA) ----------2 division
VR610 (AFC MB) ----------2 division

<STEP 2>

1. Set the spectrum analyzer to REG 4 mode.

REG 4 mode

ITEM PARAMETER

(1)	REF LEVEL	-10.0dBm
(2)	ATTEN	10dB
(3)	DIV (dB/DIV)	5dB/div
(4)	START FREQUENCY	0MHz
(5)	STOP FREQUENCY	50MHz
(6)	RES BW	1MHz
(7)	VIDEO BW	3kHz
(8)	SWEEP TIME	300msec
(9)	TRIGGER	EXT (HEAD SW)
(10)	VID AVG	10

<STEP 3>

EQUALIZER COARSE ADJUSTMENT

1. Connect the spectrum analyzer to TP8.
2. Connect the EXT trigger input of the spectrum analyzer to TP400 (HEAD SW).
3. Adjust VR609 (MAG A) and VR608 (MAG B) so that the gain is -30dB +0/-10dB at 5MHz portion.
4. Adjust VR613 (AFC HA) and VR612 (AFC HB) so that the gain is -35dB +0/-10dB at 40MHz portion.
5. Adjust VR611 (AFC MA) and VR610 (AFC MB) so that the gain is -23dB +0/-10dB at 20MHz portion.

Note: If still out of specification.
Just adjust as A curve as shown in Figure.
And then carry on next the adjustment.

5-6. EQUALIZATION ADJUSTMENT (2)
(S1 : REC/PLAY CH0)
(S2 : REC/PLAY CH1)

SPEC	MINIMUM ERROR RATE
TEST	TV MONITOR, FRONT ERROR DISPLAY
MODE	VAR (× 1)
TAPE	SHUFFLING OFF 75% COLOR BAR ALIGNMENT
M.EQ	SPECTRUM ANALYZER
INPUT	
ADJ.	VR611 (AFC MA)[F1], VR610 (AFC MB)[F1], VR613 (AFC HA)[E1], VR612 (AFC HB)[E1], VR10 (COMP BIAS LEVEL)[F1], VC301 (PHASE ADJ)[A2], VC1 (RESON A)[G2], VC2 (RESON B)[G2], VR3 (PHASE SHIFT)[I2] VR608(MAG B), VR609(MAG A)[D1], VR11 (AUTO EQ IN LEVEL)[E1] VR12 (AFC MATCH)[F4]

5000 SERIES

[RF SECTION]

<STEP 1>

1. Use the "75% Color Bars Shuffle OFF" tape.
2. Search = "CENTER"
   Maximize the envelope bar graphs on the front panel by adjusting the AT heights in the SUPER USER Menu.
3. Choose "PB mode : ch0" on the SUPER USER MENU when adjusting the Equalizer CH0 board, and "PB mode : ch1" for the CH1 board at the same time video output picture must be stable.
4. Center VC1/VC2.
5. Use VR3/VR10/VC301 to minimize errors (speckling) on the picture monitor. Continue adjusting these three pots until no further improvement is possible.
6. Use VC1, VC2 & VR3 to further reduce the errors.
7. Use VC1, VC2 & VR10 in the same manner.
8. Adjust VC301 to minimize screen errors and adjust VR12 to minimize screen errors.
9. Change the ECC Sample on the TEST/RF Menu to fast
10. Memorize the spectrum waveform on TP8 into the "B" memory of the HP8591A Spectrum Analyzer.
11. Next adjust VR613 & 611 to reduce the error rate further. Turn VR613 very slightly in the direction which reduces the INNER ERROR RATE in the "CH0 A" bar graph. Then adjust VR611 very slightly in the opposite direction CCW to reduce the error further. Continue this alternate adjustment of the pots until no more improvement is possible.
12. Repeat this same adjustment technique starting with VR612 and following with VR610, in order to minimize the INNER ERROR RATE on the "CH0 B" bar graph.
13. Recall the previously memorized waveform in the Spectrum Analyzer "B" memory, and compare it to the waveform now present on TP8. If the two waveforms aren't similar in appearance, adjust the two pairs of pots 613/611 (CHA) & 612/610 (CHB) in the manner described above, for minimum error rate for both heads, and similar spectrum waveshapes.
14. Adjust VR608 & 609 to minimize the "sawtooth" appearance of the spectrum waveform at the 5Mhz end.
15. Adjust VR10 & VC301 to further reduce the Inner Error Rate.

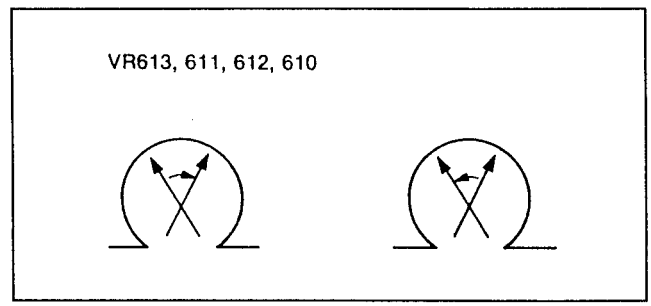

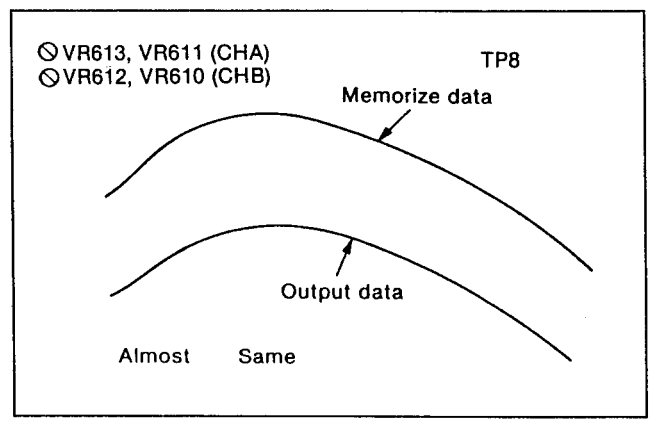

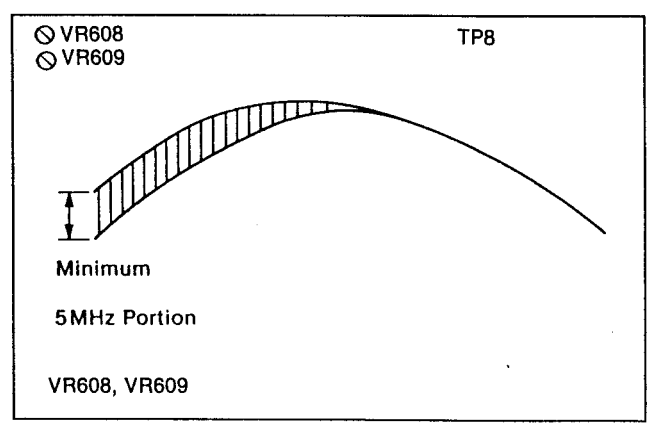

16. Confirm the error rate is less than 10-4 (scale 3).

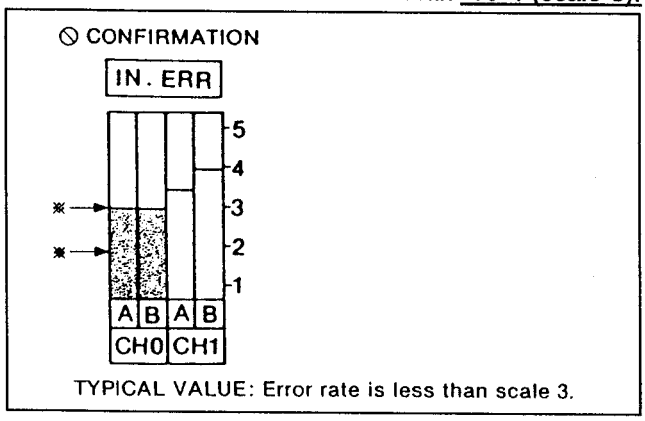

Note: After equalization adjustment, RF envelope output level adjustment is required as follows.

1. Connect the scope to TP8 and place the unit in PLAY mode.
2. Adjust VR608 and VR609 so that the output envelope is 400mVp-p. (50Ω terminated).
3. Connect the scope to WFM out and adjust VR11 so that the output envelope is 200mVp-p (75Ω terminated).

5-7. WFM OUT CONFIRMATION (S1 : REC/PLAY CH0) (S2 : REC/PLAY CH1)

SPEC	EYE : 200mV ± 50mV
TEST	WFM OUT
MODE	VAR × 1
TAPE	SHUFFLING OFF 75% COLOR BAR ALIGNMENT TAPE
M.EQ	OSCILLOSCOPE
INPUT	
ADJ.	VR11 (AUTO EQ IN LEVEL)[E1]

<STEP 1>

1. Connect the scope to VFM OUT on the rear panel through 75Ω termination.
2. Set the Front Menu to WFM ENV mode.
3. Confirm the ENVELOPE level is 900mV ± 200mV.
4. Set the Front Menu to WFM EYE mode.
5. Adjust VR11 (AUTO EQ IN LEVEL) so that the level is 200mV ± 500mV.

FINAL CONFIRMATION

SPEC	Refer to figure
TEST	TP8 [E2], TP400 [f4]
MODE	VAR × 1
TAPE	SHUFFLING OFF 75% COLOR BAR
M.EQ	SPECTRUM ANALYZER
INPUT	
ADJ.	VR3, VR610, VR611, VR612, VR613, VC1,

1. Set the spectrum analyzer as shown in item 5-5.
2. Connect the spectrum analyzer to TP8.
3. Connect the EXT input of spectrum analyzer to TP400.
4. Confirm that the output spectrum is as shown in figure.
5. If it is not, readjust VR3, VC1, VC2 (PHASE), VR610, VR612, VR611 and VR613 (LEVEL).

5MHz = 30MHz ± 2MHz (NTSC)
35MHz ± 2MHz (PAL)

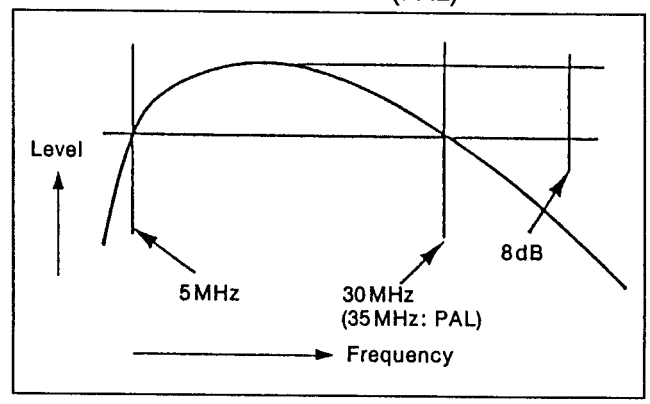

7. CUE AUDIO (S3) BOARD MODE CONDITION

Set the Switches on the AUDIO IN.OUT P.C.B. and set the MENU condition.

INPUT ATT SELECT SW ..... 4dBm (on the AUDIO IN/OUT Board)
OUTPUT ATT SELECT SW ... 0dBu (on the AUDIO IN/OUT Board)
INPUT IMPEDANCE SW ..... HIGH (on the AUDIO IN/OUT Board)

MENU CONDITION

AUDIO IN MENU

Select the CUE AUDIO LEVEL
to "UNITY" : F5

AUDIO OUT MENU

Select the CUE AUDIO LEVEL
to "UNITY" : F5

7-1. MASTER OSC DRIVE VOLTAGE ADJUSTMENT (S3 : CUE AUDIO)

SPEC	21V ± 0.1V DC
TEST	TP1[I5]
MODE	REC PLAY
TAPE	BLANK TAPE
M.EQ	OSCILLOSCOPE
INPUT	
ADJ.	VR1 (21V ADJ.)[I4]

<STEP 1>
1. SCOPE : TP1
2. Place the unit in the RECPLAY mode.
3. Adjust VR1 so that the DC voltage is 21V ± 0.1V DC.

7-2. MASTER OSC ADJUSTMENT (S3 : CUE AUDIO)

SPEC	TP2 = 70kHz ± 0.2kHz, 5.5Vpp ± 1.0V TP3 = 5.5Vpp ± 1.0V
TEST	TP2[H2], TP3[G2]
MODE	REC PLAY
TAPE	BLANK TAPE
M.EQ	FREQUENCY COUNTER, OSCILLOSCOPE
INPUT	
ADJ.	T1[H2], T1 on S3 SUB2

<STEP 1>
1. FREQUENCY COUNTER : TP2
2. Place the unit in the RECPLAY mode.
3. Adjust T1 so that the OSC frequency is 70kHz ± 0.2kHz.

<STEP 2>
1. SCOPE CH1 : TP2
   CH2 : TP3
2. Place the unit in the RECPLAY mode.
3. Confirm that the OSC frequency level A is 5.5 ± 1.0V p-p as shown in Figure.

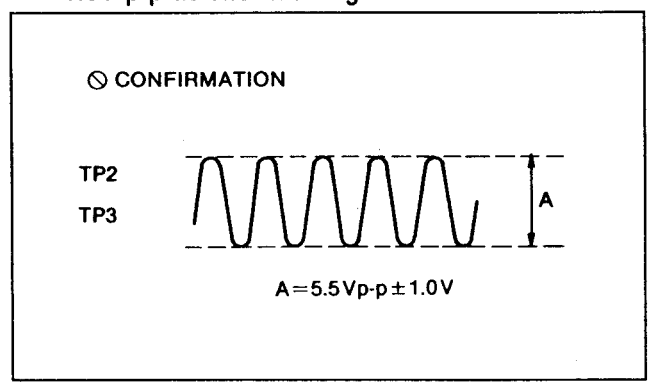

<STEP 3>
1. Scope CH1 : PIN 6 of S3 SUB2
2. Adjust T1 on S3 SUB2 so that the OSC level becomes maximum.

<STEP 4>
1. SCOPE CH1 : PIN 6 of S3 SUB2
   CH2 : PIN 7 of S3 SUB2
2. Confirm the OSC level is 5.5Vpp ± 1V.
3. Confirm the frequency is 140 kHz ± 5kHz.

7-3. FULL ERASE CURRENT ADJUSTMENT (S3 : CUE AUDIO)

SPEC	TP4:more than 508mVp-p,T=30msec±10msec
TEST	TP4[H1], P205 21A --- Trigger
MODE	RECPLAY, RECPLAY ↔ STOP
TAPE	BLANK TAPE
M.EQ	OSCILLOSCOPE (STORAGE)
INPUT	
ADJ.	T2[I1]

<STEP 1>

1. SCOPE : CH1 : TP4
   CH2 : 21A of P205 --- Trigger
2. Place the unit in RECPLAY mode.
3. Adjust T2 so that the signal level A is maximum.
4. Confirm that level A is more than 508mVp-p.

<STEP 2>

1. Place the unit moving to RECPLAY from STOP mode and moving to STOP from RECPLAY mode.
2. Confirm that the rising and falling period of the waveform is 30ms ± 10ms as shown in Figure.

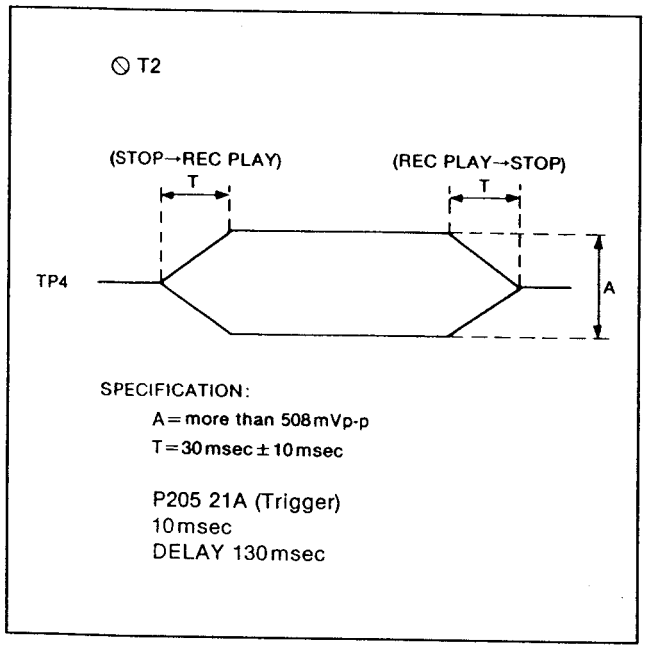

7-4. CUE ERASE CURRENT ADJUSTMENT (S3 : CUE AUDIO)

SPEC	TP5:more than 508mVpp, T=30msec±10msec
TEST	TP5[G2], P205 22A --- Trigger
MODE	INSERT REC ↔ PLAY (CUE ON)
TAPE	PRE-RECORDED TAPE
M.EQ	OSCILLOSCOPE
INPUT	
ADJ.	T3[G1]

<STEP 1>

1. SCOPE : CH1 : TP5
   CH2 : 22A of P205 --- Trigger
2. Place the unit in INSERT CUE REC mode.
3. Adjust T3 so that the signal level A is maximum.
4. Confirm that it level A is more than 508mVp-p as shown in Figure.

<STEP 2>

1. Place the unit moving to INSERT REC from play and moving to play from INSERT REC mode.
2. Confirm that the rising and falling period of the waveform is 30ms ± 10ms as shown in Figure.

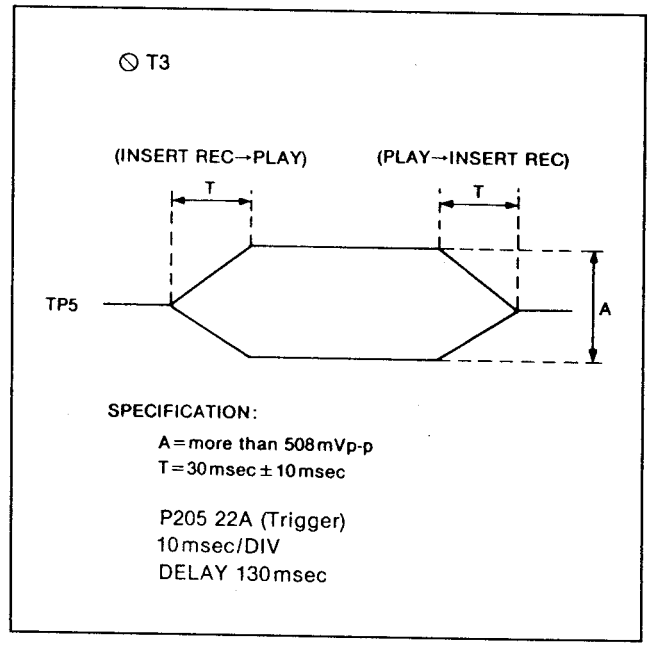

7-5. T/C ERASE CURRENT ADJUSTMENT (S3 : CUE AUDIO)

SPEC	TP6:more than 508mVpp, T=30msec±10msec
TEST	TP6 (T/C ERASE)[F2], P205 22B --- Trigger
MODE	INSERT REC, ASSEMBLE REC ASSEMBLE REC ↔ PLAY
TAPE	PRE-RECORDED TAPE
M.EQ	OSCILLOSCOPE
INPUT	
ADJ.	T4 (T/C ERASE)[F1]

<STEP 1>

MENU CONDITION

MAN - EDIT MENU INSERT "ON"
Select the TC F10 to "ON".

<STEP 2>

1. SCOPE : CH1 : TP6
   CH2 : P205 of 22B --- Trigger
2. Place the unit in INSERT REC mode.
3. Adjust T4 so that the signal level A is maximum.
4. Confirm that it level A is more than 508mVp-p as shown in Figure.

<STEP 3>

1. Place the unit in ASSEMBLE RECORDING mode.
2. Confirm that the signal level A is more than 508mVp-p.
3. If it is not, Adjust T4 so that the level A is more than 508mVp-p as shown in Figure.

<STEP 4>

1. Place the unit moving in ASSEMBLE RECORDING mode from PLAYBACK mode and moving in PLAYBACK from ASSEMBLE RECORDING mode.
2. Confirm that the rising and falling period of the waveform is 30msec ± 10msec as shown in Figure.

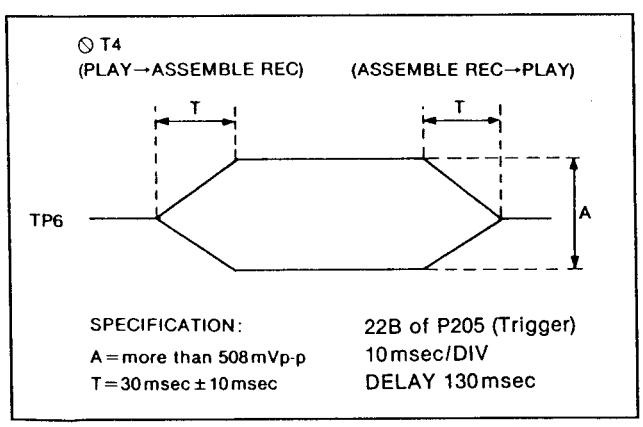

7-6. CTL ERASE CURRENT ADJUSTMENT (S3 : CUE AUDIO)

SPEC	TP7=more than 508mVpp,T=30msec±10msec
TEST	TP7[D2], P205 22C --- Trigger
MODE	ASSEMBLE REC to PLAY, PLAY to ASSEMBLE REC
TAPE	PRE-RECORDED TAPE
M.EQ	OSCILLOSCOPE
INPUT	
ADJ.	T5[D1]

<STEP 1>

MENU CONDITION

MAN - EDIT MENU ASSEMBLE

<STEP 2>

1. SCOPE : CH1 : TP7
   CH2 : P205 of 22C --- Trigger
2. Place the unit in ASSEMBLE REC mode.
3. Adjust T5 so that the signal level A is maximum.
4. Confirm that level A is more than 508mVp-p as shown in Figure.

<STEP 3>

1. Place the unit in ASSEMBLE RECORDING mode from PLAYBACK mode and moving in PLAYBACK from ASSEMBLE RECORDING mode.
2. Confirm that the rising and falling period of the waveform is 30 ± 10msec as shown in Figure.

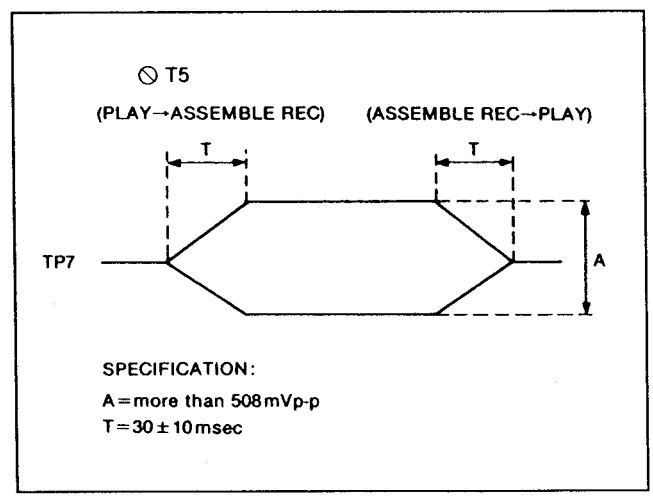

7-7. T/C BIAS & SIGNAL ADJUSTMENT (S3 : CUE AUDIO)

SPEC	TP8 BIAS CURRENT A = 62mVpp ± 3mV SIGNAL CURRENT B = 5mVpp±0.2mV
TEST	TP8[I3], TP10[H4], TP11[I4]
MODE	ASSEMBLE REC
TAPE	BLANK TAPE
M.EQ	OSCILLOSCOPE, PROBE 1:1
INPUT	
ADJ.	T6[I2], VR2 (T/C BIAS CURRENT)[I3] VR4 (T/C SIGNAL CURRENT)[G4]

<STEP 1>

MENU CONDITION

MAN - EDIT MENU ASSEMBLE

<STEP 2>

1. SCOPE : TP8
2. Place the unit in ASSEMBLE REC mode.
3. Adjust T6 so that the signal level A is maximum.

<STEP 3>

1. SCOPE : TP10, TP11 (probe GND)
2. Place the unit in ASSEMBLE REC mode.
3. Adjust VR2 so that the BIAS CURRENT LEVEL A is 62mVpp ± 3mV as shown in Figure.
4. Adjust VR4 so that the SIGNAL CURRENT LEVEL B is 5mVpp ± 0.2mV as shown in Figure.

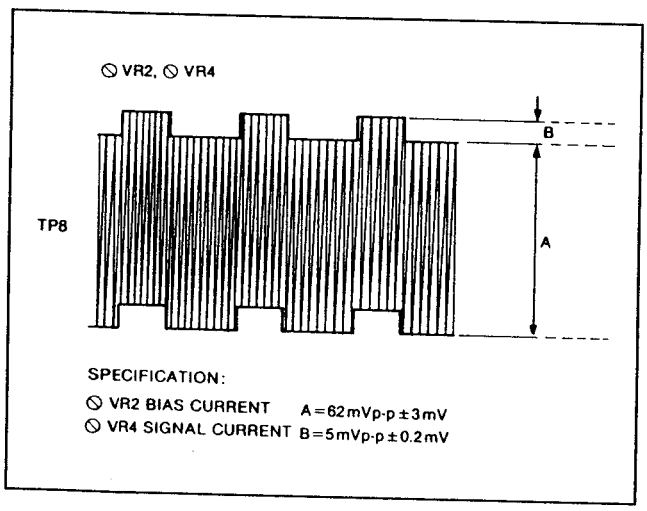

7-8. CUE BIAS CURRENT ADJUSTMENT (1)(S3 : CUE AUDIO)

SPEC	TP9 : MAXIMUM, CUE OUT : MAXIMUM
TEST	TP9[F3], CUE OUT
MODE	REC PLAY, REC PLAY ↔ PLAY
TAPE	BLANK TAPE
M.EQ	OSCILLOSCOPE
INPUT	1kHz +4dBm Sinewave signal to CUE IN
ADJ.	T7[F3], VR3 (CUE BIAS CURR.)[G3]

<STEP 1>

1. SCOPE : TP9
2. Place the unit in REC PLAY mode.
3. Adjust T7 so that the signal level is maximum.

T7 Signal Level = maximum

<STEP 2>

1. SCOPE : CUE OUT
2. Place the unit repeat moving in REC PLAY from PLAYBACK and in PLAYBACK from REC PLAY mode.
3. Adjust VR3 so that the signal level is maximum.

7-9. EE LEVEL ADJUSTMENT (S3 : CUE AUDIO)

SPEC	TP13:-12dBm±0.2dB, CUE OUT:4dBm±0.2dB
TEST	TP13[B3], CUE OUT
MODE	EE (EJECT)
TAPE	
M.EQ	VTVM
INPUT	1kHz 4dBm Analog Sinewave signal to CUE IN
ADJ.	VR6 (EE LEVEL)[B3], VR7 (EE OUT LEVEL)[A3]

4000 SERIES

<STEP 1>
MACHINE CONDITION
IN/OUT ATT SW (on Audio IN/OUT P.C.B) : +4dBm
INPUT IMPEDANCE : 600Ω
AUDIO IN MENU : UNITY

<STEP 2>
VTVM : TP13
Adjustment VR : VR6

SPECIFICATION : -12dBm ± 0.2dB

<STEP 3>
VTVM : CUE OUT
Adjustment : VR7

SPECIFICATION : 0dBu ± 0.2dB

7-10. PLAYBACK EQUALIZER ADJUSTMENT (S3 : CUE AUDIO)

SPEC	50Hz~1kHz = -3dB~+1.5dB 1kHz~15kHz = 1.0dB, 1kHz 0dB Reference
TEST	TP16 [C3]
MODE	PLAY
TAPE	AUDIO FREQUENCY RESPONSE ALIGNMENT TAPE
M.EQ	VTVM
INPUT	
ADJ.	VR10 (PB EQ)[C1]

<STEP 1>
1. VTVM : TP16
2. Play back the Alignment Tape.
3. Adjust VR10 so that the Playback level is within the specification as shown.

SPECIFICATION:
50Hz ~ 1kHz = -3dB ~ +1.5dB
1kHz ~ 15kHz = ± 1.0dB
(1kHz 0dB Reference)

7-11. PLAYBACK LEVEL ADJUSTMENT (S3 : CUE AUDIO)

SPEC	TP16 = -12dB±0.2dB, CUE OUT:0dBu± 0.2dB
TEST	TP16[C3], CUE OUT
MODE	PLAY
TAPE	ALIGNMENT TAPE 1KHz 0VU PORTION
M.EQ	VTVM
INPUT	
ADJ.	VR11 (PB LEVEL)[B2], VR12 (PB OUT LEVEL[C3]

<MACHINE CONDITION>

1. Output ATT : 4dBm
2. Audio out Cue : UNITY (MENU)

<STEP 1>
1. VTVM : TP16
2. Playback the Audio Level Alignment Tape.
3. Adjustment VR : VR11

SPECIFICATION : -12dBm ± 0.2dB

<STEP 2>
1. VTVM : CUE OUT
2. Playback the Audio Level Alignment Tape.
3. Adjustment VR : VR12

SPECIFICATION : 4dBm ± 0.2dB

7-12. CUE BIAS CURRENT ADJUSTMENT (2)(S3 : CUE AUDIO)

SPEC	TP16:-12dBm ± 0.2dB, CUE OUT AUDIO DISTORTION IS LESS THAN 3%
TEST	TP16[C3], CUE OUT
MODE	REC PLAY ↔ PLAY
TAPE	BLANK TAPE
M.EQ	VTVM DISTORTION METER
INPUT	1kHz +4dBm, 1kHz +12dBm
ADJ.	VR8[A2]

<STEP 1>
1. VTVM : TP16
2. Supply a 1kHz +4dBm sine wave signal to CUE IN and Record.
3. Playback a just recorded portion.
4. Adjust VR8 so that the CUE BIAS CURRENT LEVEL is -12dBm ± 0.2dB.

TP16

SPECIFICATION: VR8 : -12dBm ± 0.2dB

<STEP 2>

1. DISTORTION METER : CUE OUT
2. Supply a 1kHz +12dBm sinewave signal to CUE IN and Recorded.
3. Playback a just recorded portion.
4. Confirm that the distortion is less than 3%.
5. If it is not adjust VR3 as follow as item 7-11. CUE BIAS CURRENT ADJUSTMENT (1) <STEP 2>.

CUE OUT

SPECIFICATION: AUDIO DISTORTION : less than 3%

7-13. REC EQUALIZER ADJUSTMENT (S3 : CUE AUDIO)

SPEC	50Hz~1kHz = -3dB~+1.5dB 1kHz~15kHz = 1.0dB (1kHz 0dB Reference)
TEST	CUE OUT
MODE	REC PLAY → PLAY
TAPE	BLANK TAPE
M.EQ	VTVM
INPUT	-6dBm, SWEEP
ADJ.	VR14 (REC EQ 2)[B2], FL4[A2], VR9[A2]

<STEP 1>

1. VTVM : CUE OUT
2. Supply a difference frequency sinewave as shown below and record.
3. Playback a just recorded portion.
4. Adjust VR14, FL4 and VR9 so that the Playback level is within the specification.

INPUT LEVEL: -6dBm 1kHz (Reference)
-6dBm SWEEP as shown below

SPECIFICATION: 50Hz ~ 1kHz = -3dB ~ +1.5dB
1kHz ~ 15kHz = ± 1.0dB
(1kHz -6dBm Reference)

Adjustable frequency
VR14 and FL4 : 5kHz ~ 12.5kHz
VR9 : 12.5kHz ~ 15kHz

7-14. RECORDING LEVEL ADJUSTMENT (S3 : CUE AUDIO)

SPEC	TP16 : -12dBm ± 0.2dB
TEST	TP16[C3]
MODE	REC PLAY → PLAY
TAPE	BLANK TAPE
M.EQ	VTVM
INPUT	1kHz 4dBm Sinewave Signal to CUE IN
ADJ.	VR8[A2]

<STEP 1>

1. VTVM : TP16
2. Supply a 1kHz 4dBm sinewave signal to CUE IN and Record it.
3. Playback a just recorded portion.
4. Adjust VR8 so that the level is -12dBm ± 0.2dB.

SPECIFICATION: -12dBm ± 0.2dB

7-15. CUE METER ADJUSTMENT (S3 : CUE AUDIO)

SPEC	CUE METER -20dB
TEST	CUE METER
MODE	EJECT
TAPE	
M.EQ	
INPUT	1kHz 4dBm Sinewave Signal to CUE IN
ADJ.	VR13[C4]

<STEP 1>

Note: Before this adjustment, CUE METER OFFSET (item 12-3) is required.

1. Supply a 1kHz 4dBm sinewave signal to CUE IN.
2. Adjust VR13 so that the meter level is -20dB.

7-16. CUE MIX ADJUSTMENT (S3 : CUE AUDIO)

SPEC	+4dBm±0.5dBm(NTSC)
TEST	CUE OUT
MODE	EJECT
TAPE	
M.EQ	
INPUT	1kHz 4dBm Sinewave Signal to CUE IN
ADJ.	VR5[B4]

<STEP 1>

1. Supply a 1kHz 0dBu sinewave signal to CUE IN.
2. Set the VTR in to the CUE DMIX mode as shown below.

   AUDIO IN → SET UP → CH MIX ON → (CURSOR CENTER) → set the CH-1 S

3. Adjust VR5 so that the cue output level is 4dBm ± 0.5dBm.

8. AT (S4) BOARD

MACHINE CONDITION

1. Disconnect the P523 on the H.A. REGULATOR (S) P.C.B. which is located at right side of the Mechanism. while adjustment 8-1 through 8-6.
   Connect P523 from adjustment 8-7.

MENU CONDITION
TEST MENU
↓
AT SERVO TEST MENU

Set the each functions as follow.
1. F4: SEARCH = "CENTER"
2. F5: PATTERN = "ENABLE"
3. F8: AT HEIGHT = Ach "0"
   Bch "0"
4. SW2601 [D2] on S4 board is OPEN.
5. Error correction switches on L3 board are all OFF.
6. Error concealment switch on L4 board is OFF.

8-1. ENVELOPE DETECTION ADJUSTMENT (S4 : AT)

SPEC	0.7V ± 0.1VDC, PEAK = +3V ±0.1VDC
TEST	TP2611 (ENV CH1)[D1], TP2612 (ENV
MODE	STOP, EJECT, SW2601=OPEN, P523=OFF SEARCH = CENTER, PATTERN = ENEBLE
TAPE	75% COLOR BAR PORTION ALIGNMENT TAPE
M.EQ	OSCILLOSCOPE
INPUT	
ADJ.	VR2601[F2], VR2603[D4], VR2602[F2], VR2604[E4]

<STEP 1>

MENU CONDITION

Refer to the Machine Condition and Menu Condition at the beginning of this SECTION. P523 = OFF

<STEP 2>
1. SCOPE : CH1 TP2611
   SCOPE : CH2 TP2612
2. Set the VTR in EJECT mode.
3. Adjust VR2601 and VR2602 so that the level of waveform is 0.7V ± 0.1 V DC.

<STEP 3>
1. SCOPE : CH1 TP2611
   SCOPE : CH2 TP2612
2. Set the VTR in STOP mode.
3. Rotate the capstan shaft by hand, and set the waveform peak becomes maximum.
4. Adjust VR2603 and VR2604 so that the level of waveform is 3V ± 0.1V DC.
5. Note that VR2601/VR2602/VR2603/VR2604 effect each other.
   Repeat step 2 and 3 and confirm that each adjustment is in specification.

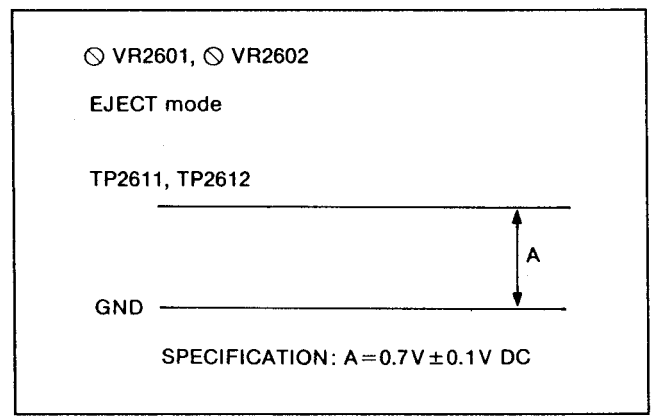

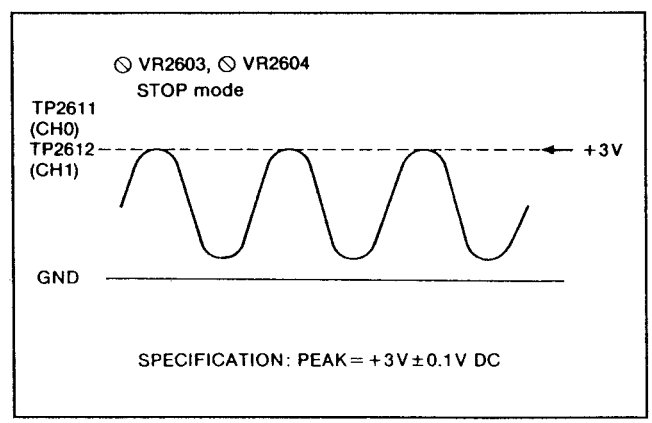

8-2. CONFIRMATION OF GROUP DELAY COMPENSATION CIRCUIT (S4: AT)

SPEC	REFER TO FIGURE
TEST	TP2621[H3]
MODE	VAR (X-1, STILL, X1, X2, X3), SW2601 = OPEN, P523 = OFF SEARCH = CENTER, PATTERN = ENABLE
TAPE	75% COLOR BAR PORTION ALIGNMENT TAPE
M.EQ	OSCILLOSCOPE
INPUT	
ADJ.	CONFIRMATION ONLY

<STEP 1>
MACHINE CONDITION
Refer to the Machine condition and Menu condition at the beginning of this section.

<STEP 2>
Connect the scope to TP2621

<STEP 3>
Set the VTR VAR X-1, STILL, X1, X2 and X3 and confirm the each DC voltage is shown below.

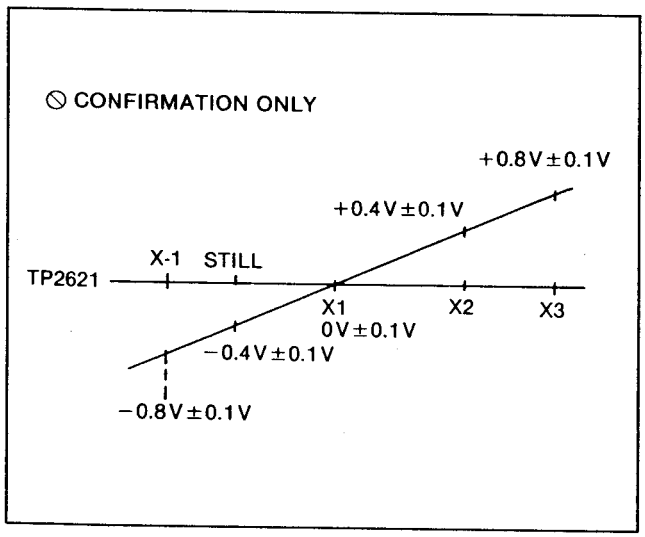

<STEP 4>
The DC level of VAR X3 mode should be stable more than 20 sec.

8-3. D/A CONVERTER FULL SCALE ADJUSTMENT (S4 : AT)

SPEC	5.0V ± 0.1VDC
TEST	TP2606 [B1], TP2607 [B2]
MODE	EJECT SW2601-OPEN, P523-OFF, SEARCH-CENTER, PATTERN-FIX
TAPE	
M.EQ	OSCILLOSCOPE
INPUT	
ADJ.	VR2613 (DA1FS)[B2], VR2614 (DA2FS)[B2]

<STEP 1>
MACHINE CONDITION
1. Set the VTR in EJECT mode.
2. Set the AT mode to SEARCH = CENTER and PATTERN = FIX in the AT TEST Menu.

<STEP 2>
1. SCOPE CH1 : TP2606
   SCOPE CH2 : TP2607
2. Adjust VR2613 and VR2614 so that the voltage at TP2606 and TP2607 are +5V ± 0.1V DC.
3. Adjust VR2613 and VR2614 so that the difference voltage between TP2606 and TP2607 are within 0.05V. If the both voltage at TP2606 and TP2607 are 5.0V DC, then it is OK. If the one of the voltage is 4.9V adjust the other level is same level.
4. Note that the VR2613 and VR2614 effect each other.

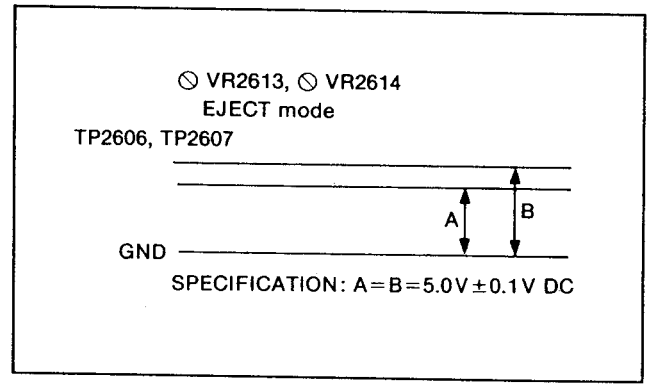

8-4. D/A CONVERTER OFFSET ADJUSTMENT (S4 : AT)

SPEC	TP2606 = TP2607 = 0V ± 0.05V DC
TEST	TP2606[B1], TP2607[B2], TP2623[D1], TP2624[E1], TP2619[E1] ... TRIGGER
MODE	VAR X1, SW2601 = OPEN, P523 = OFF SEARCH = CENTER, PATTERN = FIX
TAPE	75% COLOR BAR PORTION ALIGNMENT TAPE
M.EQ	OSCILLOSCOPE
INPUT	
ADJ.	VR2615 (DA10S)[B2], VR2616 (DA20S)[B2]

<STEP 1>
MACHINE CONDITION
1. Set the AT mode to SEARCH = CENTER and PATTERN = FIX in the AT TEST Menu.
2. Set the VTR in VAR X1 mode.

<STEP 2>
1. SCOPE CH1 : TP2606
   CH2 : TP2607
2. Adjust VR2615 and VR2616 so that their voltage are 0V ± 0.05V DC.

<STEP 3>
1. SCOPE CH1 : TP2623
   CH2 : TP2624
2. Confirm the waveform center is flat.

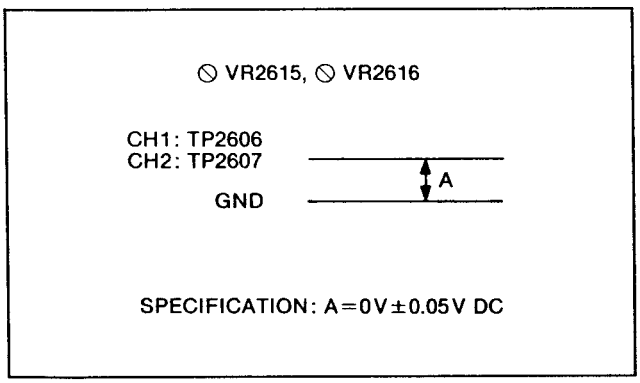

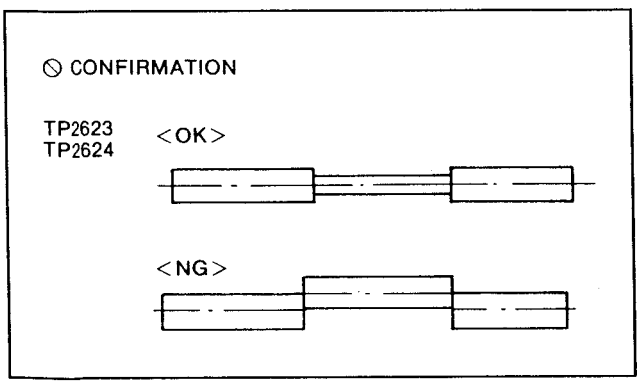

8-5. OPEN GAIN ADJUSTMENT (S4 : AT)

SPEC	TP2627= TP2628 = 3.3Vpp ± 0.2Vp-p
TEST	TP2627[I1], TP2628[I1]
MODE	VAR, SPEED : FRAME STILL, SW2601 = OPEN, P523 = OFF SEARCH = CENTER, PATTERN = ENABLE
TAPE	75% COLOR BAR PORTION ALIGNMENT TAPE
M.EQ	OSCILLOSCOPE
INPUT	
ADJ.	VR2607[F1], VR2608[G1]

<STEP 1>
MACHINE CONDITION

<STEP 2>
MENU CONDITION
Refer to the Machine Condition and Menu Condition at the beginning of this SECTION.

<STEP 3>
1. SCOPE : TP2627
2. Playback a 75% color bar portion of the Alignment Tape on FRAME STILL mode.
3. Adjust VR2607 so that the waveform level A is 3.3Vp-p ± 0.2Vp-p as shown in Figure.

<STEP 4>
1. SCOPE : TP2628
2. Playback a 75% color bar portion of the Alignment Tape on FRAME STILL mode.
3. Adjust VR2608 so that the waveform level A is 3.3Vp-p ± 0.2Vp-p as shown in Figure.

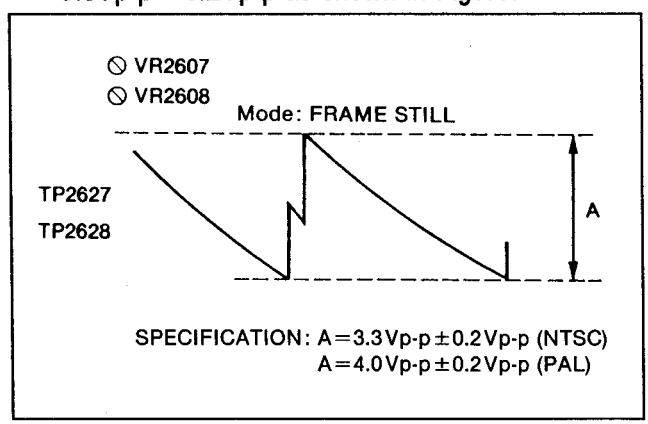

8-6. DRIVE WAVEFORM CONFIRMATION (S4 : AT)

SPEC	REFER TO FIGURE
TEST	TP5006, TP5007 (HEAD AMP REGURATOR BOARD)
MODE	VAR X3, VAR X-1, SW2601 = OPEN, P523 = OFF SEARCH = CENTER, PATTERN = ENABLE
TAPE	75% COLOR BAR PORTION ALIGNMENT TAPE
M.EQ	OSCILLOSCOPE
INPUT	
ADJ.	CONFIRMATION ONLY

<STEP 1>
MACHINE CONDITION
Set the Machine condition as shown in the first page of this section.

<STEP 2>
1. SCOPE CH1 : TP5006
   CH2 : TP5007 on H.A.REGURATOR BOARD
   The H.A.REGURATOR BOARD is located at right side of mechanism.
2. Set the VTR in VAR X3 mode and confirm the drive voltage is as shown below.

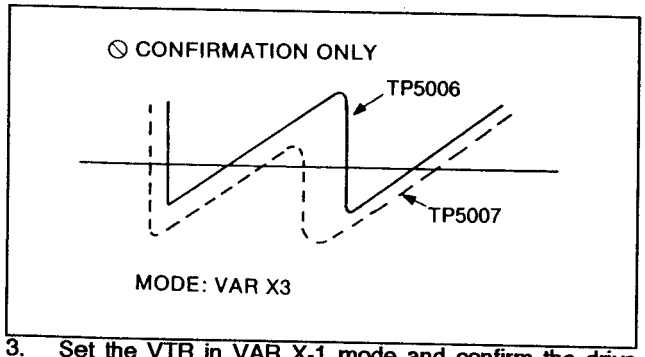

3. Set the VTR in VAR X-1 mode and confirm the drive voltage is as shown below.

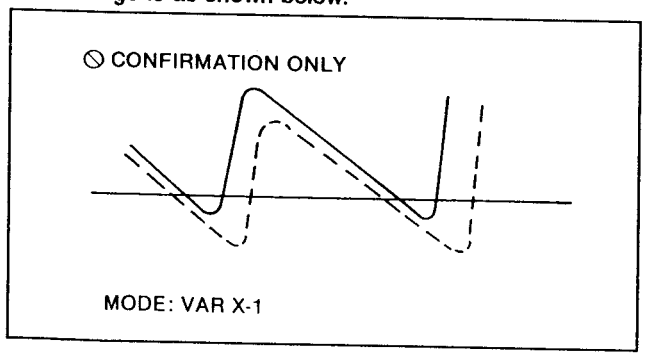

4. Turns power off and connect P523.

8-7. STRAIN SENSOR OUTPUT ADJUSTMENT (A CH)(S4 : AT)

SPEC	REFER TO FIGURE
TEST	TP2627[I1], TP2629[G1] TP2619[E1] ... TRIGGER
MODE	VAR FIELD STILL, SW2601=OPEN,P523=ON SEARCH = CENTER, PATTERN = ENABLE
TAPE	75% COLOR BAR PORTION ALIGNMENT TAPE
M.EQ	OSCILLOSCOPE (DC mode)
INPUT	
ADJ.	VR2609 (STR OS A)[G1]

<STEP 1>
1. Confirm the P523 is connected.
2. Set the AT mode SEARCH = CENTER and PATTERN = ENEBLE by AT TEST Menu.

<STEP 2>
1. Press VAR button and set the speed to STILL (FIELD STILL).
2. SCOPE CH1 : TP2627
   CH2 : TP2629
   TRIGGER : TP2619

<STEP 3>
1. Rotate the capstan shaft by hand and set the waveform of TP2627 crosses to GND at center of the slope.
2. Adjust VR2609 so that the TP2629 and TP2627 waveform crosses to GND at their center of the waveform.

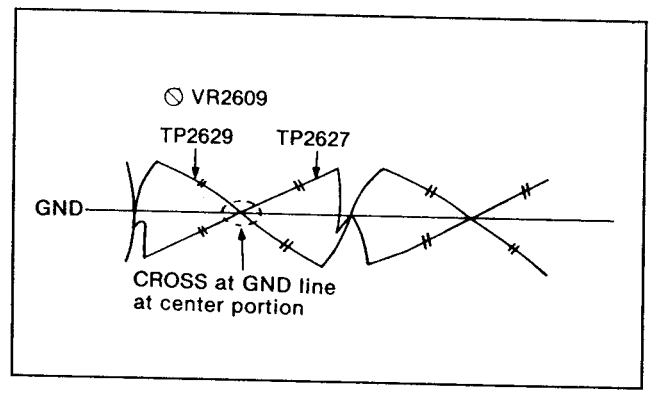

8-8. STRAIN SENSOR OUTPUT ADJUSTMENT (B CH)(S4 : AT)

SPEC	REFER TO FIGURE
TEST	TP2628[I1], TP2630[H1] TP2619[E1] ... TRIGGER
MODE	VAR FIELD STILL, SW2601=OPEN,P523=ON SEARCH = CENTER, PATTERN = ENABLE
TAPE	75% COLOR BAR PORTION ALIGNMENT TAPE
M.EQ	OSCILLOSCOPE (DC mode)
INPUT	
ADJ.	VR2610 (STR OS B)[H1]

<STEP 1>
1. Confirm the P523 is connected.
2. Set the AT mode SEARCH = CENTER and PATTERN = ENEBLE by AT TEST Menu.

<STEP 2>
1. Press VAR button and set the speed to STILL (FIELD STILL).
2. SCOPE CH1 : TP2628
   CH2 : TP2630
   TRIGGER : TP2619

<STEP 3>
1. Rotate the capstan shaft by hand and set the waveform of TP2628 crosses to GND at center of the slope.
2. Adjust VR2610 so that the TP2630 and TP2628 waveform crosses to GND at their center of the waveform.

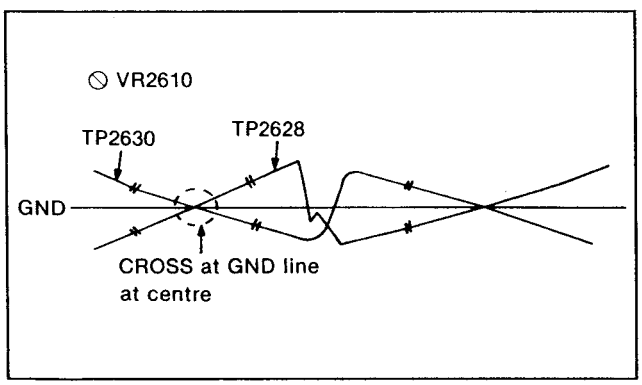

8-9. STRAIN SENSOR GAIN ADJUSTMENT (S4 : AT)

SPEC	TP2630 = TP2629 = 3.3VPP ± 0.5V
TEST	TP2629[G1], TP2630[H1]
MODE	JOG, SPEED : FRAME STILL, SW2601 = OPEN, P523 = ON SEARCH = CENTER, PATTERN = ENABLE
TAPE	75% COLOR BAR PORTION ALIGNMENT TAPE
M.EQ	OSCILLOSCOPE
INPUT	
ADJ.	VR2611[G1], VR2612[G1]

Connect P523

<STEP 1>
MENU CONDITION
Refer to the Machine Condition and Menu Condition at the beginning of this SECTION. Do not remove P523.

<STEP 2>
1. SCOPE : TP2629
2. Playback a 75% color bar portion of the Alignment Tape in FRAME STILL mode.
3. Adjust VR2611 so that the waveform level A is 3.3Vpp ± 0.5V as shown in Figure.

<STEP 3>
1. SCOPE : TP2630
2. Playback a 75% color bar portion of the Alignment Tape on FRAME STILL mode.
3. Adjust VR2612 so that the waveform level A is 3.3Vpp ± 0.5V as shown in Figure.

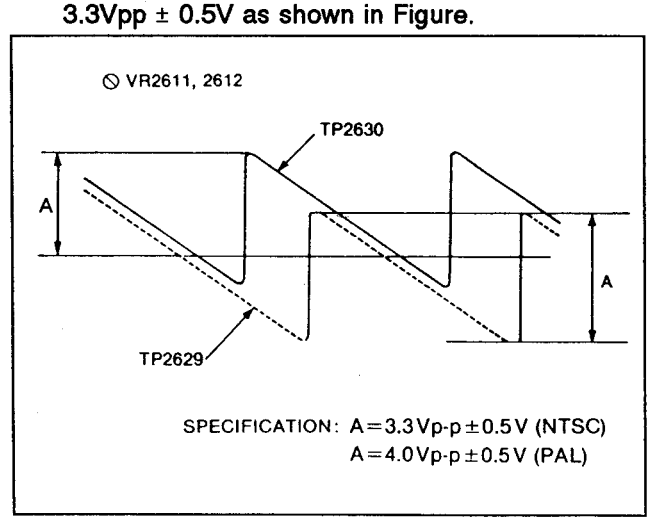

8-10. AT HEIGHT (1) ADJUSTMENT (S4 : AT)

SPEC	TP2619 PULSE IS LOCATED As shown in figure.
TEST	TP2610[F1], TP2619[F1], TP5006[C2], TP5007 (H.A REGULATOR S)[C1] TP2606, TP2607
MODE	VAR×1, SW2601=OPEN, P523-ON, SEARCH=CENTER, PATTERN=ENABLE
TAPE	75% COLOR BAR PORTION ALIGNMENT TAPE
M.EQ	OSCILLOSCOPE
INPUT	
ADJ.	VR2605[F1], VR2606[F1]

<STEP 1>
SCOPE CH1 : TP2610 Segment Pattern
SCOPE CH2 : TP2619 Pulse
SCOPE CH3 : TP5006 Drive Voltage
SCOPE CH4 : TP5007 Drive Voltage

<STEP 2>
1. Field or Frame Still Option (Setup/Home/AT Play)
2. Center/Enable (Test/Servo/AT)
3. SW2601 open
4. Variable X1 Playback
5. 75% Color Bar Alignment tape, shuffling ON
6. Zero the AT Head Heights from the front panel. (Height ON/ BS with F9/left & right cursors, with the front panel knob).

<STEP 3>
1. Initially, adjust the deflection pattern voltages at TP5006 & 5007 are 0 volts DC by VR2605 & VR2606 during VAR X1 playback. This centers the AT heads.
2. Next, fine adjust these pots to achieve three conditions
   A). Proper rising stairstep and pulse timing at TP2610 & 2619. (The stairs are rising from left to right, there are 6 or 8 steps (for NTSC or PAL), and the pulse is aligned with the highest step.
   B). Maximum RF on the 4 "Envelope" bar graphs on the Test/Servo/AT screen.
   C). The segment LED D609 on the AT board should be off.
3. The drive voltage at TP5006 & 5007 will have changed, but they should still be within the range of zero volts, plus or minus fifty volts.
4. Note the voltages at TP5006 & 5007 for use in subsequent adjustments.

Note:
1. In this adjustment if output drive voltage waveforms(TP5006 and TP5007) are not flat like a pulse. VR2613 and VR2614 adjustments are required as shown in Figure.

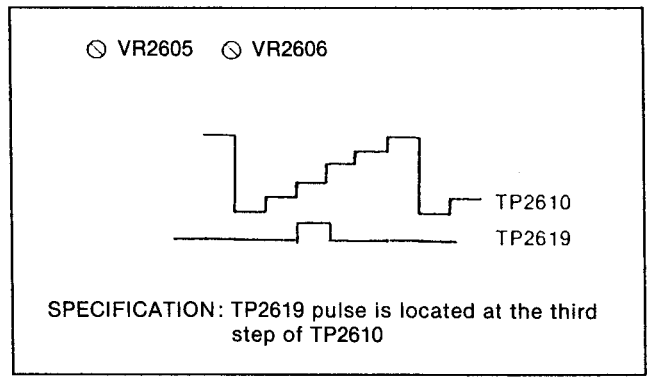

SPECIFICATION: TP2619 pulse is located at the third step of TP2610

2. Place the unit in VAR × 1 mode.
3. Adjust VR2613 and VR2614 so that the output waveform are flat as shown in Figure.
4. Confirm that the voltage at TP2606 and TP2607 are +5V ± 0.1VDC. (8-3. D/A CONVERTER FULL SCALE ADJUSTMENT)

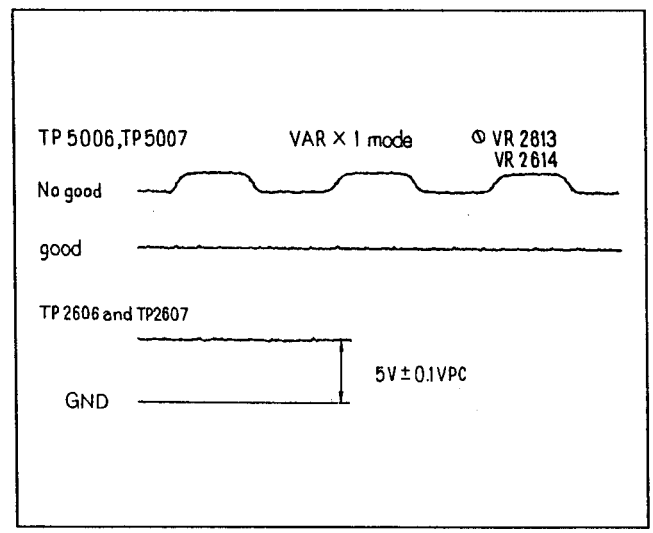

8-11. AT HEIGHT (2) ADJUSTMENT (S4 : AT)

SPEC	TP2619 PULSE IS LOCATED AT PEAK OF TP2610
TEST	TP2610[F1], TP2619(TRIGGER)[E1], TP5006[C2], TP5007(H.A REGULATOR S)[C1] TP2629, TP2630
MODE	VAR, SW2601-CLOSE, P523-ON, SEARCH = CENTER, PATTERN= ENABLE
TAPE	75% COLOR BAR PORTION ALIGNMENT TAPE
M.EQ	OSCILLOSCOPE
INPUT	
ADJ.	VR2609 (STR OS A)[G1], VR2610 (STR OS B)[H1]

This adjustment will be done in the open loop and closed loop modes.

<STEP 1>

OPEN LOOP MODE

1. 75% color bar alignment tape
2. SW2601 OPEN
3. AT menu Screen Options; CENTER/ENABLE
4. Variable X1 playback

<STEP 2>

1. SCOPE CH1 : TP2629
   SCOPE CH2 : TP2630
   (Strain Offset pots)
   VR2609
   VR2610
   (Strain Offset pots)

<STEP 3>

1. Adjust VR2609 &2610 ("STROSA" & "STROSB") for 0 volts at TP2629 & 2630.

CLOSED LOOP MODE

<STEP 4>

1. Close the strain loop with SW2601.
2. Continue in Variable X1 playback.
3. While monitoring TP5006 & 5007, adjust the Strain Offsets VR2609 & 2610 for the voltages noted at in step (8-10).

<STEP 5>

1. Now, fine adjust VR2609 & 2610 for three conditions;
   A). Proper rising stairstep and pulse timing at TP2610 & 2619. (The stairs are rising from left to right, there are 6 or 8 steps (for NTSC or PAL), and the pulse is aligned with the highest step.
   B). Maximum RF on the 4 "envelope" bar graphs on the Test/Servo/AT screen.
   C). Zero volts plus or minus 50 volts at test points 5006 & 5007.

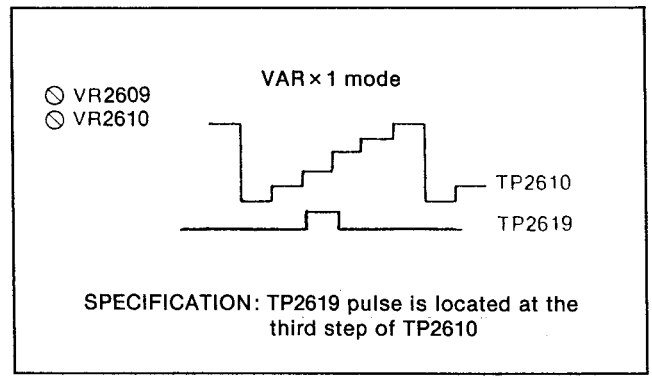

SPECIFICATION: TP2619 pulse is located at the third step of TP2610

<STEP 6>

Repeat section 8-10, 8-11 until front panel envelope does not change when SW2601 is opened and closed.

8-12. GAIN ADJUSTMENT (S4 : AT)

SPEC	REFER TO FIGURE
TEST	TP2611[D1], TP2612[D1], TP2610[F1], TP2619 (TRIGGER[E1] TP5006[C2],TP5007[C1] TP8 (S1) TP8 (S2) TP207 on REC Amp
MODE	VAR×1, FRAME STILL, SW2601 = CLOSE, H.A REGULATOR, P523 = ON, SEARCH = CENTER, PATTERN = ENABLE
TAPE	75% COLOR BAR PORTION ALIGNMENT TAPE
M.EQ	OSCILLOSCOPE
INPUT	
ADJ.	VR2611[G1], VR2612[H1]

<STEP 1>

1. AT Play "Frame" option on the SET UP/HOME screen or TEST/SERVO/AT screen.
2. CENTER/ENABLE on the Test/Servo/AT screen.
3. 75% color bar tape
4. Place the unit to STILL mode.
5. Set the AT head heights to zero from the front panel.

<STEP 2>

1. SCOPE CH1 : TP2610 Segment Pattern
   SCOPE CH2 : TP2619 Pulse
   VR2611 "STRGNA"
   VR2612 "STRGNB"

<STEP 3>

1. Adjust VR2611 & 2612 for Maximum RF level on the "envelope" bar graphs on the front panel while maintaining the proper timing relationship between the pulse and Segment waveforms, at the fourth step.
2. As a rough check, the voltage in the play mode should be approximately 0 volts at TP5006 & 5007, and the segment LED should be off.

<STEP 4>

1. Next, fine adjust the circuit as follows;
2. AT Play "Frame" on the SETUP/HOME screen or TEST/SERVO/AT screen.
3. CENTER/ENABLE
4. SW2601 CLOSED
5. Variable STILL mode (not play Still).

<STEP 5>

1. SCOPE CH1 : TP8 on the S1 board
   SCOPE CH2 : TP8 on the S2 board
   TP207 for triggering
   (on the REC Amp Board).
2. Fine adjust VR2611 & 2612 for flatness in the detected envelope, and maximum envelope level on the front panel meter.

Note:

1. If output waveform of TP8 is not clear, connect the scope to CH1 to TP2611 and CH2 to TP2612 on the AT board.
2. Confirm that output DC level is flat.

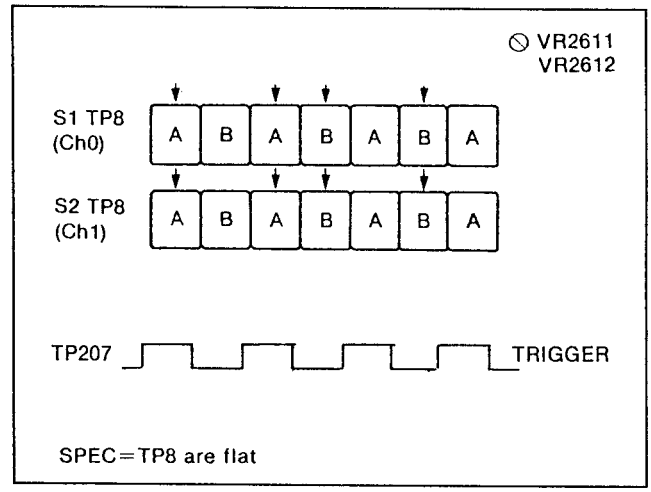

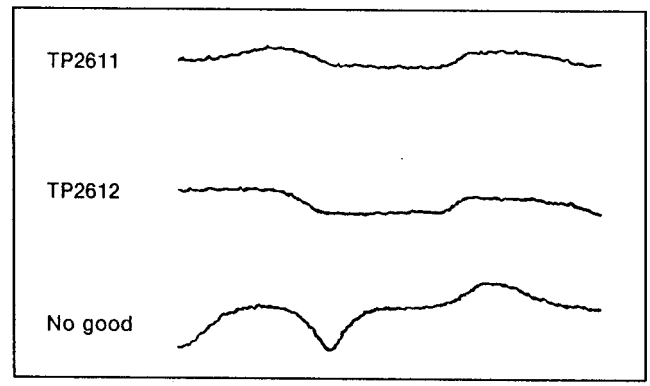

8-13. STRAIN LOOP FREQUENCY RESPONSE ADJUSTMENT (S4 : AT)

SPEC	REFER TO FIGURE
TEST	TP2629[G1] --- A CH WFM OUT TP2630[H1] --- B CH (ENVELOPE) TP2619[E1] --- (H SW) TRIGGER,
MODE	VAR X1, -X1, SW2601 = CLOSE, SEARCH=CENTER=PATTERN=ENABLE
TAPE	75% COLOR BAR PORTION ALIGNMENT TAPE
M.EQ	OSCILLOSCOPE
INPUT	Composite color bar to VIDEO IN
ADJ.	VR2619(TWN A)[H2], VR2621(LGN A)[H2] - A CH VR2620(TWN B)[H2], VR2622(LGN B)[H2] - B CH

<STEP 1>
1. SCOPE CH1 : WFM OUT (ENV)
   CH2 : TP2619 (TRIG)
2. Set the each VRS as follows.
   VR2619, VR2620 : center position.
   VR2621, VR2622 : fully counterclockwise

<STEP 2>
1. Place the unit to VAR ×1 mode.
2. Set the AT height on the test menu to 1/3 level decrease (off track) from maximum envelope.
3. Turn VR2619 and VR2620 to clockwise until output envelope waving is increase.
4. Adjust VR2619 and VR2620 to counterclockwise so that the output envelope waving is minimum.
5. Confirm that the SEGM lamp is OFF.
6. After confirmation, set the AT HEIGHT to 0.
7. Set the VR2621 and VR2622 to fully clockwise.

Note: Adjust each head (A,B) independently.

<STEP 3>
1. Scope CH1 : WFM OUT (ENV pattern)
   CH2 : TP2629, TP2630
   CH3 : TP2619 (TRIG)
2. Place the unit to VAR-X1 and VAR-X3.

<STEP 4>
1. Set the AT height on the test menu to 1/3 level decrease (off track) from maximum envelope.
2. Adjust VR2621 and VR2622 so that the droop of entrance side of output envelope is same level between a and b.

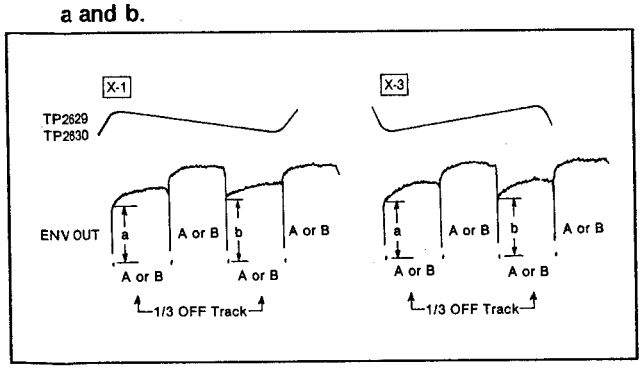

<STEP 5>
1. Confirm that the SEGM lamp is OFF.
2. After confirmation, set the AT HEIGHT to 0.

Note: Adjust each head (A,B) independently.

8-14. GROUP DELAY COMPENSATION ADJUSTMENT (S4 : AT)

SPEC	REFER TO FIGURE
TEST	TP8[E2] → S1, TP8[E2] → S2, TP631[H2] → S4, TP632[I3] → S4
MODE	VAR × -1, × 3 → VAR ×1 ~ ×-3
TAPE	75% COLOR BAR PORTION ALIGNMENT TAPE
M.EQ	OSCILLOSCOPE
INPUT	
ADJ.	VR2617[D1], VR2618[E1]

<STEP 1>
1. AT Play Frame or Field.
2. SCOPE CH1 : TP8 on the S1 board.
   SCOPE CH2 : TP8 on the S2 board.
   SCOPE CH3 : TP2631
   SCOPE CH4 : TP2632
3. Use the knob to activate the variable times 3 and variable times -1 modes, alternately.

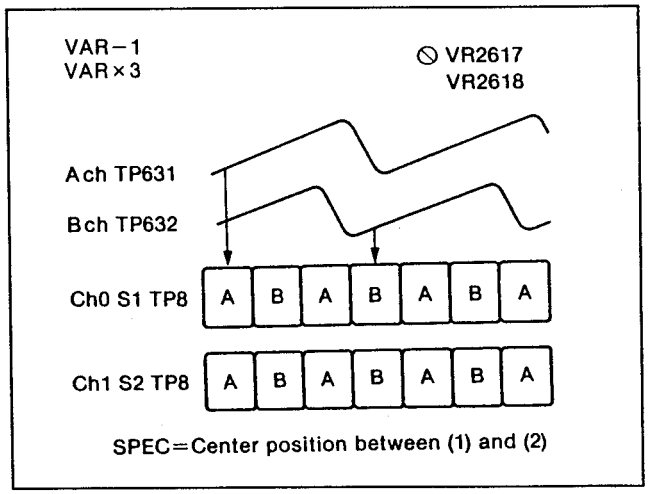

4. Confirm that the output waveform is flat as shown in figure.
5. If it is not, adjust VR2617 and VR2618.

8-15. PRE READ CONFIRMATION (S4 : AT)

SPEC	REFER TO FIGURE
TEST	TP2610[F1], TP2619[E1]
MODE	EDIT PLAY, SW2601-CLOSE, P523-ON AT TEST = NORMAL, PRE READ MODE
TAPE	75% COLOR BAR PORTION ALIGNMENT TAPE
M.EQ	OSCILLOSCOPE
INPUT	
ADJ.	CONFIRMATION ONLY

<STEP 1>
SCOPE CH1 : TP2610
SCOPE CH2 : TP2619

<STEP 2>
1. Set PRE READ mode as follows.
   HOME MENU → F+F8(PRE READ ON) →
   MANUAL EDIT MENU → F2 INSERT
2. PLAYBACK the Alignment Tape.

<STEP 3>
Confirm the pulse at TP2619 is located at 4TH (PAL), 3RD (NTSC) steps of TP2610 as shown below.

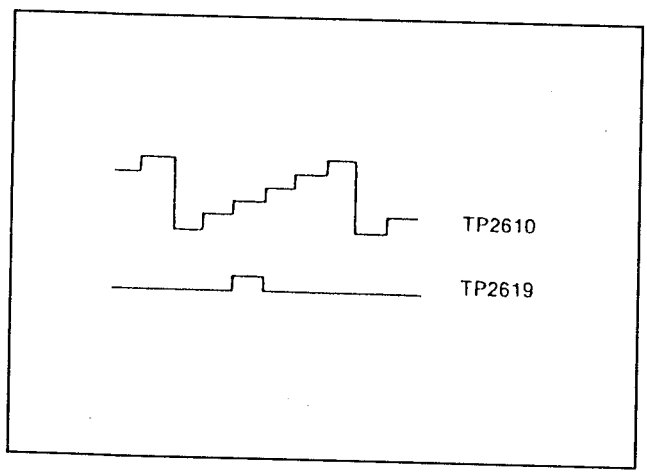

8-16. CONFIDENCE PB CONFIRMATION (S4 : AT)

SPEC	REFER TO FIGURE
TEST	TP2610[F1], TP2619[E1]
MODE	CONFIDENCE PB HOME MODE, SW2601=CLOSE
TAPE	BLANK TAPE
M.EQ	OSCILLOSCOPE
INPUT	
ADJ.	CONFIRMATION ONLY

<STEP 1>
SCOPE CH1 : TP2610
SCOPE CH2 : TP2619

<STEP 2>
Confirm the pulse at TP2619 is located at Second steps of TP2610 as shown below.

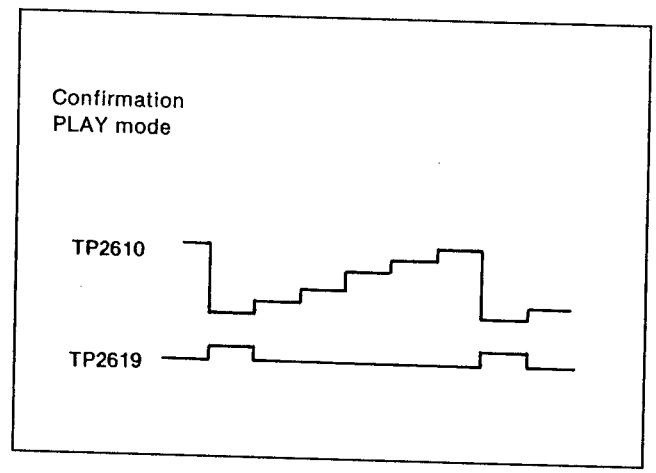

FINAL CONFIRMATION OF AT ADJUSTMNET

SPEC	TP2619 PULSE IS LOCATED as shown in figure
TEST	TP2611[D1], TP2612[D1], TP2610[F1], TP2619(TRIGGER)[E1], TP5006, TP5007 (H.A REGULATOR)
MODE	VAR, FRAME STILL, SW2601 = CLOSE, P523 = ON SEARCH = CENTER, PATTERN = ENABLE
TAPE	75% COLOR BAR POSITION ALIGNMENT TAPE
M.EQ	OSCILLOSCOPE
INPUT	
ADJ.	VR2609 (STR OS A),VR2610 (STR OS B)[H1] VR2611[G1], VR2612[H1]

<STEP 1>

MACHINE CONDITION

1. VAR X1, P523 = ON, SW2601 = CLOSE
2. Set the AT mode, SEARCH = CENTER, PATTERN = ENABLE
3. Set the AT HEIGHT on the front panel, both A CH and B CH are 0.

<STEP 2>

1. SCOPE CH1 : TP2610
   CH2 : TP2619
   CH3 : TP5006
   (H.A REGULATOR Board)
   CH4 : TP5007
   (H.A REGULRATOR Board)
2. Confirm the waveform is as shown in Figure. If it is not, adjust VR2609 and VR2610.
3. Confirm that the DC voltage is 0 ± 50V DC.
4. Confirm that the envelope output is maximum on the front display.
5. If it is not Readjust VR2609 and VR2610. (Refer to item 8-11 AT HEIGHT (2) ADJUSTMENT)

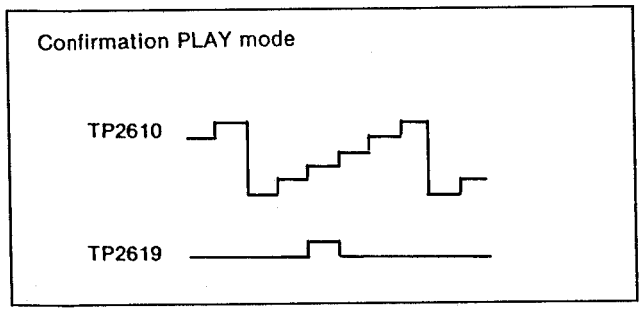

<STEP 3>

1. Set the AT mode to NORMAL (F1).
2. Place the unit in the PLAY mode.
3. Confirm the waveform is as shown in figure.

<STEP 4>

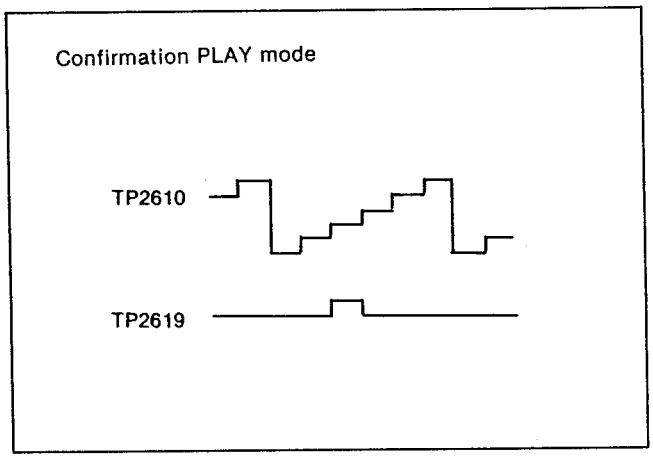

1. Place the unit in the Recording mode.
2. Confirm the waveform is as shown in figure.

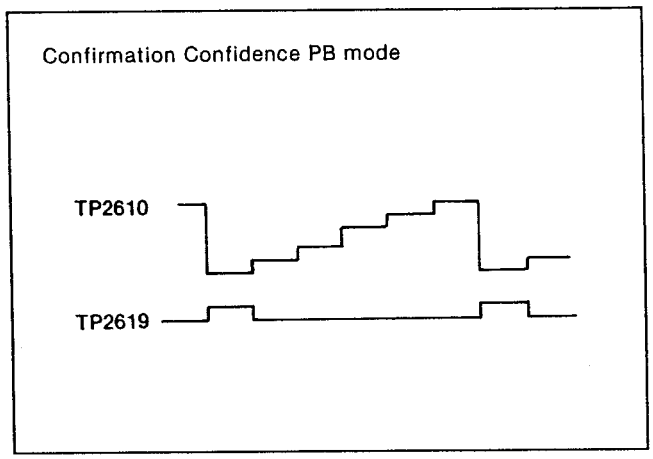

3. If it is not, readjust VR2609 and VR2610. (Refer to item 8-11 AT HEIGHT (2) adjustment)

NOTE: If the segment steps is mached the pulse and segment, Segment LED is OFF.

<STEP 5>

1. SCOPE CH1 : TP8 (S1) on the Equalizer Board.
   CH2 : TP8 (S2) on the Equaliger Board.
   CH3 : TP37 (S5) on the SERVO Board. (for trigger)
2. Confirm that the envelope is flat from VAR X-1 to VAR X3. And check the CH A and CH B envelope output balance.

Note: If the envelope drop off at entrance side and exit side, in this case re-check the tape pass linearity. (Refer to P3 or P6 Height adjustment)

3. If it is not, readjust VR2611 and VR2612. (Refer to item 8-15 GAIN adjustment)

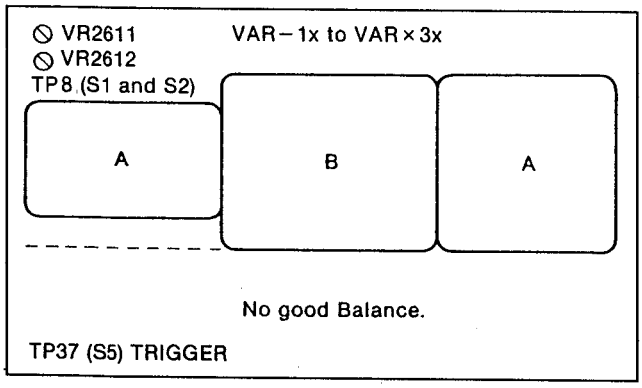

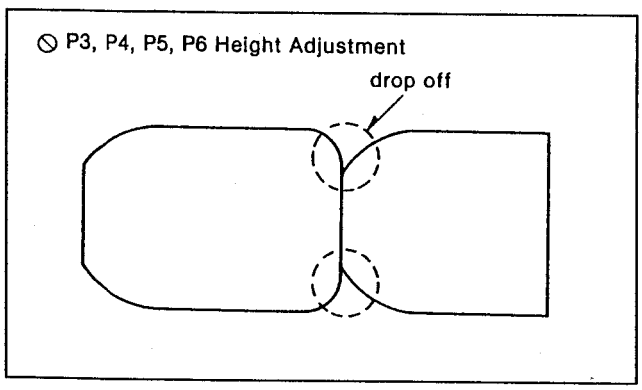

9. SERVO (S5) BOARD

9-1. CAPSTAN FG AMP ADJUSTMENT (S5 : SERVO)

SPEC	FG DC BIAS = 6.0V ± 0.2V DC
TEST	P2210-14C[D5], P2210-16C[D5], TP14[F4], TP17[C4]
MODE	EE1 (EJECT)
TAPE	
M.EQ	OSCILLOSCOPE DC mode
INPUT	
ADJ.	VR1[I4], VR2[I4]

<STEP 1>

1. SCOPE : P2210-14C
2. Turn the capstan Motor by hand.
3. Adjust VR1 so that the center of CAP FG level A is 6.0V ± 0.2V DC as shown in Figure.

<STEP 2>

1. SCOPE : P2210-16C
2. Turn the capstan Motor by hand.
3. Adjust VR2 so that the center of CAP FG level A is 6.0V ± 0.2V DC as shown in Figure.

<STEP 3>

1. SCOPE CH1 : TP14
   CH2 : TP17
2. Turn the capstan Motor by hand.
3. Confirm that the pulse is appeard on the scope.

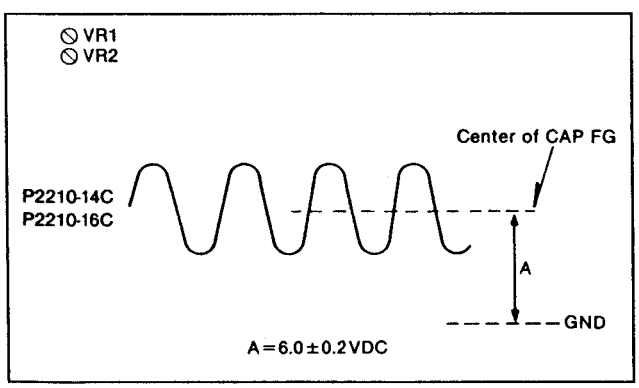

9-2. TAKE UP REEL TORQUE ADJUSTMENT (S5 : SERVO)

SPEC	T REEL TORQUE = 53gr.cm ± 5gr.cm
TEST	TAKE UP REEL
MODE	TAPE LOADING COMPLETION WITHOUT CASSETTE TEST MECH, NO FRLD
TAPE	SELF-RECORDING TAPE
M.EQ	DIAL TORQUE GAUGE(150g max.) --- VFK71 DIAL TORQUE GAUGE ADAPTOR--VFK0134 TENTELO METER --- VFK0132
INPUT	
ADJ.	FRONT PANEL ADJUSTMENT VR

<STEP 1>

1. Remove the cassette compartment.
2. Set the service switch SW1-4 ON and turn the power ON.
3. Attach the Dial Torque Gauge Adaptor with the Dial Torquen Gauge and set the Dial Torque Gauge on the Gake Up Reel Motor.
4. Set the VTR into test mode.

   TEST → SERVO → REEL → MEASURE → S.T

5. Place the unit in the STOP mode.
6. Place the unit into the Take Up Reel Torque Adjustment mode as shown below.

   TEST → SERVO → REEL → F+F3

7. Adjust Front Panel adjustment VR so that the Take Up Reel Torque is within specification.

   SPECIFICATION = 5.gr.cm ± 5gr.cm

<STEP 2>

1. Insert a self recording tape.
2. Set the VTR into recording mode.
3. Adjust Take up Reel Torque so that the tension is within specification.

   SPECIFICATION : 30gr.cm ± 5gr.cm

SPEC	1	2	3	4	5	6
Factory Set	ON	ON	OFF	OFF	OFF	ON
Service Mode	ON	ON	OFF	ON	OFF	ON

Service Switch

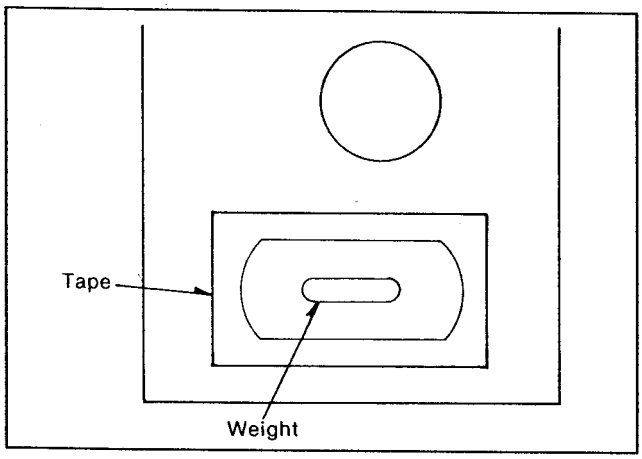

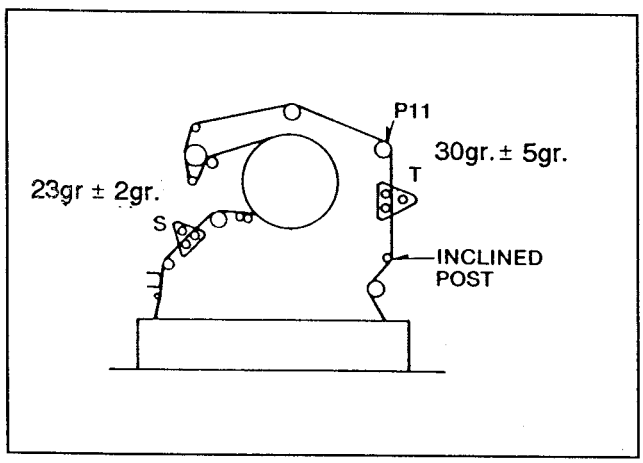

9-3. SUPPLY REEL TORQUE ADJUSTMENT (S5 : SERVO)

SPEC	S REEL TORQUE = 45gr.cm ± 5gr.cm
TEST	SUPPLY REEL
MODE	TAPE LOADING COMPLETION WITHOUT CASSETTE TEST MECH, NO FRLD
TAPE	SELF-RECORDING TAPE
M.EQ	DIAL TORQUE GAUGE(150g max.) --- VFK71 DIAL TORQUE GAUGE ADAPTOR--VFK0134 TENTELO METER --- VFK0132
INPUT	
ADJ.	FRONT PANEL ADJUSTMENT VR

<STEP 1>

1. Remove the cassette compartment.
2. Set the service switch SW1-4 ON and turn the power ON.
3. Attach the Dial Torque Gauge Adaptor with the Dial Torque Gauge and set the Dial Torque gauge, on the supply Reel Motor.
4. Set the VTR into Test mode.

   TEST → SERVO → REEL → MEASURE → S.T

5. Place the unit in the STOP mode.
6. Place the unit into the Supply Reel Torque adjustment mode as shown below.

   TEST → F8(SERVO) → F2(REEL) → F+F2(SREEL)

7. Adjust Front Panel adjustment VR so that the Supply Reel Torque is within specification.

   SPECIFICATION = 45gr.cm ± 5gr.cm

<STEP 2>

1. Insert a self recording tape.
2. Set the VTR into recording mode.
3. Adjust Supply Reel Torque so that the tension is within specification.

   SPECIFICATION : 23gr.cm ± 2gr.cm (P2~P3)

4. If it is not within specification, loowen the screw (A).
5. Insert the Eccentric Screwdriver into Hole (B).
6. Adjust the position of S. Stopper Pin Base Unit so that the supply tension is 18gr.cm ~ 28gr.cm.
7. Insert the Hex Wrench to Hex Screw (C).
8. Adjust the position of S.Stopper Pin Base Unit so that the tension is 23 ± 2gr.
9. Tighten the screw (A), then reconfirm the tension after the screw (A) is tightened.

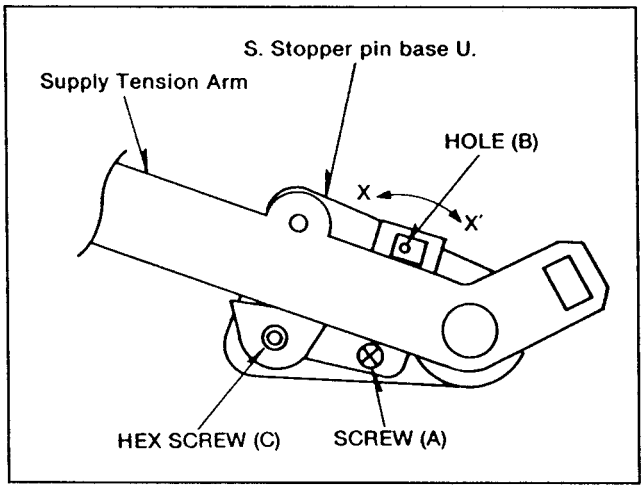

9-4. SENSOR AMP OFFSET ADJUSTMENT (S5 : SERVO)

SPEC	TP2201 = 2.5V ± 0.001V DC
TEST	TP2201[G4]
MODE	EJECT
TAPE	
M.EQ	DIGIRAL VOLT METER
INPUT	
ADJ.	VR (on the Tension I/F P.C.Board)

<STEP 1>

1. DIGITAL VOLT METER : TP2201
2. Adjustment VR on the Tension I/F P.C.Board so that the DC voltage is 2.5V ± 0.001V DC.

SPECIFICATION = 2.5V ± 0.001V DC

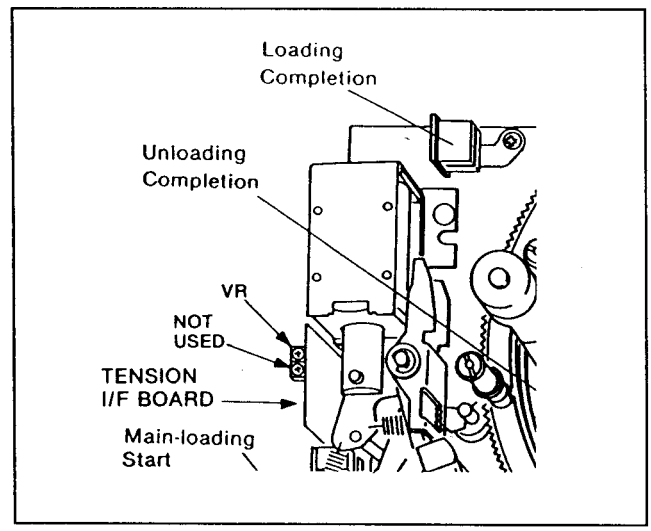

9-5. SUPPLY SENSOR VOLTAGE ADJUSTMENT (S5 : SERVO)

SPEC	TP2201 = 2.5V ± 0.02V
TEST	TP2201[G4]
MODE	EJECT → STOP → PLAY
TAPE	
M.EQ	DIGITAL VOLT METER, MECHANICAL NEUTRAL, ECCENTRIC SCREWDRIVER
INPUT	
ADJ.	SUPPLY MAGNET SENSOR BASE UNIT POSITION

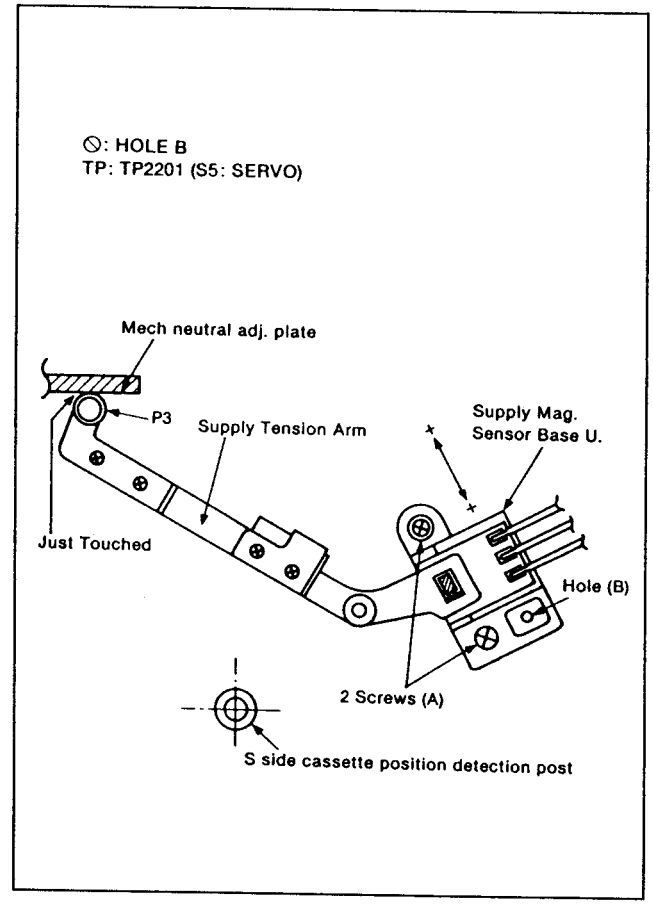

<STEP 1>

1. Turns power off.
2. Remove the cassette compartment.
3. Turns power on.
4. Set the VTR into Mech Test modeas shown below.

TEST → MECH → NO TAPE → M CASSETTE

5. Remove the P3 Stopper from the Mech Neutral Plate and set the Mech Neutral Plate on the Reel Table.
6. Press STOP key to set the loading completion mode.

<STEP 2>

1. Make sure that the P3 post touches the arm of the Mechanical Neutral Plate as shown in Figure.
2. Confirm that the voltage at TP2201 is 2.5V ± 0.001V.
3. If it is not, loosen 2 screws (A) and insert the eccentric screw driver into hole (B).
4. Adjust the position of the Supply Magnet Sensor Base Unit until the voltage at TP2201 is in specification.

SPECIFICATION : 2.5V ± 0.015V

5. Tighten the 2 screws (A) and make sure the voltage at TP2201 does not change.
   (Make sure the voltage at TP2201 does not change.)

<STEP 3>

1. Place the unit in the PLAYBACK mode.
2. Confirm that the voltage at TP2201 (Vs) ± 0.002V.
3. If it is not, adjust the Supply Magnet sensor Base Unit, follow the procedure in <STEP 3>.

9-6. LOADING TORQUE ADJUSTMENT (S5 : SERVO)

SPEC	LOADING TORQUE = 60gr.cm ± 2gr.cm
TEST	TAKE UP REEL
MODE	
TAPE	
M.EQ	REEL TORQUE METER
INPUT	
ADJ.	FRONT PANEL ADJUSTMENT VR

<STEP 1>

1. Remove the cassette compartment.
2. Set the service switch SW1-4 ON and turn the power ON.
3. Attach the Dial Torque Gauge Adaptor with the Dial Torque Gauge and set the Dial Torque Gauge on the Take Up Reel Motor.
4. Set the VTR into Mechanism Test mode.

   TEST → SERVO → REEL → MEASURE → L

5. Place the unit in the STOP mode.
6. Place the unit into the Take Up Reel Torque Adjustment mode as shown below.

   TEST → F8 (SERVO) → F2 (REEL) → F + F1 (LOADING)

7. Adjust Front Panel adjustment VR so that the Take Up Reel Torque is within specification.

   SPECIFICATION = 60gr.cm ± 2gr.cm

9-7. CONFIRM THAT THE CAPSTAN ERROR MIX RATE VR (S5 : SERVO)

SPEC	
TEST	
MODE	
TAPE	
M.EQ	
INPUT	
ADJ.	VR203[G1], VR2011[ ]

<STEP 1>

1. Turn VR203 to fully clockwise.

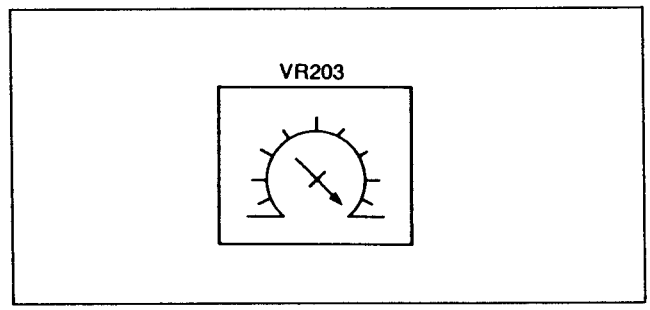

<STEP 2>

1. Set VR2011 to 5.5 division.

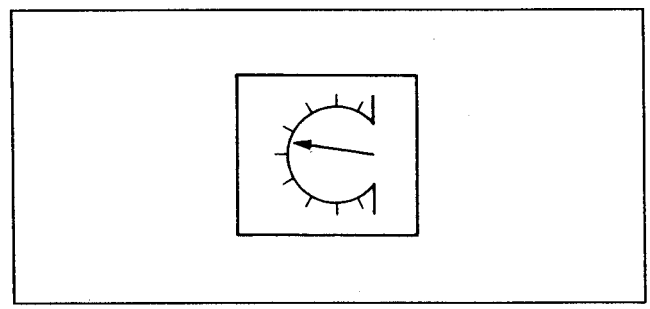

9-8. SUPPLY (FWD.) TENSION ADJUSTMENT (S5 : SERVO)

SPEC	TENSION = 23g ± 2g
TEST	"A" (P2 ~ P3), TP2201[G4]
MODE	PLAY → STOP
TAPE	BLANK 90min TAPE BEGINNING PORTION
M.EQ	TENSION METER, DIGITAL VOLT METER
INPUT	
ADJ.	SUPPLY STOPPER PIN BASE UNIT

<STEP 1>

Calibration of Tension meter

1. Before performing of the tape tension adjustment. The Tension Meter should be checked as follows.
2. Use 1/2" Digital Metal tape and a 1 once weight.
3. Pull up a tape by hand as shown in Figure.
4. Adjust a Hex screw on the Tension Meter so that the tension meter reading is set for a 1 once.

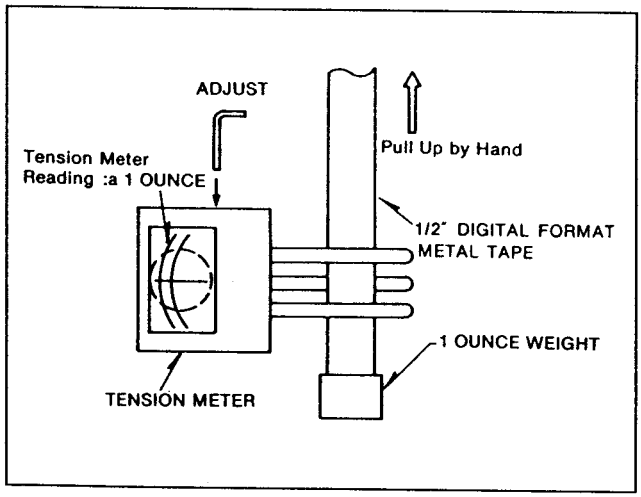

<STEP 2>

1. Insert the tension meter to between P2 and P3 post (portion "A") as shown in Figure.
2. Mode : PLAY, M cassette 90 min.
3. Confirm that the tape tension is 23 ± 2g at the tape beginning portion.

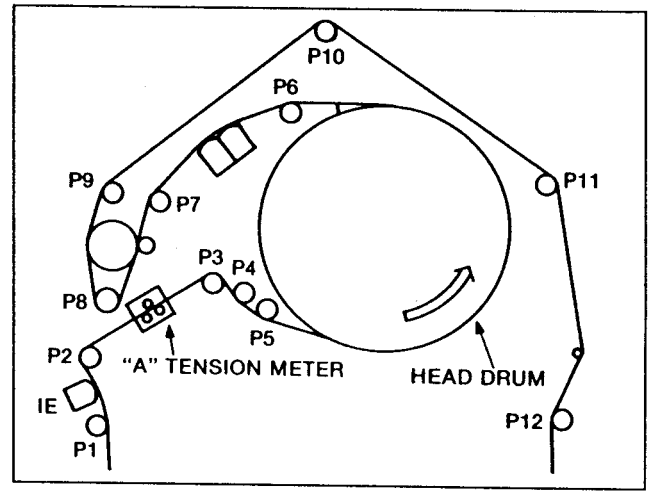

<STEP 3>

1. If it is not within specification, loosen the screw (A).
2. Insert the eccentric screwdriver into Hole (B).
3. Adjust the position of S.Stopper Pin Base Unit so that the supply tension is 18gr ~ 28gr.
4. Insert the Hex Wrench to Hex screw (C).
5. Adjust the position of S.Stopper Pin Base Unit so that the tension is 23 ± 2g.
6. Finally, tighten the screw (A).
7. Reconfirm the tension after the screw (A) is tightened.

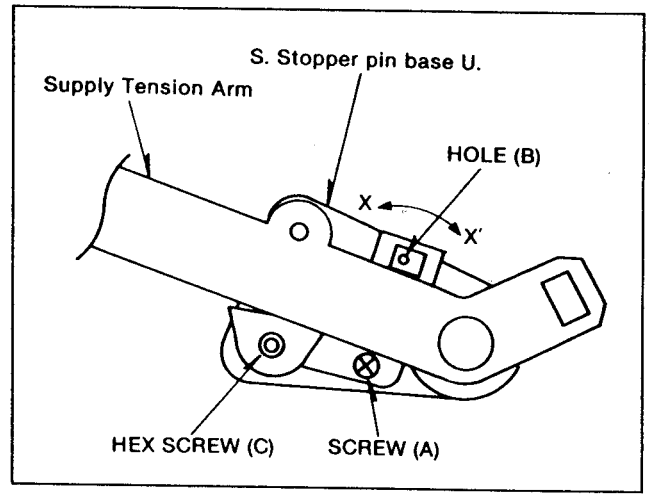

<STEP 4>

1. Place the unit in STOP mode.
   (Loading completed condition.)
2. SCOPE : TP2201
3. Confirm that the sensor voltage is (2.5V) ± 250mV.

9-9. CTL REC CURRENT ADJUSTMENT (S5 : SERVO)

SPEC	TP44 = 35mV + 2mV/-0mV
TEST	TP44[H4], PROBE 1:1, GND = TPG5[G4]
MODE	REC PLAY
TAPE	BLANK TAPE
M.EQ	OSCILLOSCOPE
INPUT	
ADJ.	VR8[G2]

<STEP 1>

1. SCOPE : TP44
2. Adjust VR8 so that the REC CTL pulse is 35 +2/-0 mV as shown in Figure.

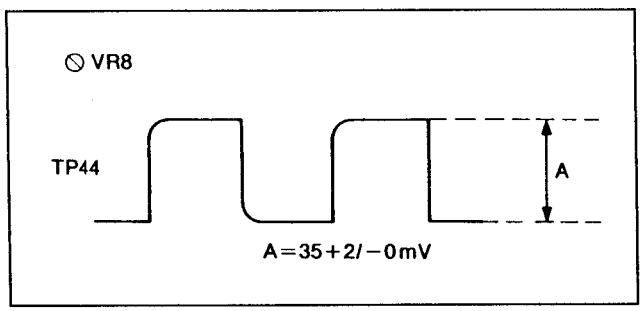

9-10. CONTROL PLAYBACK AMP OFFSET ADJUSTMENT (S5 : SERVO)

SPEC	TP20 + (CR) = 0V ± 0.1V DC
TEST	TP20[H1] ... REFER TO FIGURE
MODE	VAR 0.04
TAPE	NO SIGNAL RECORDED TAPE
M.EQ	OSCILLOSCOPE
INPUT	
ADJ.	VR9[H2]

<STEP 1>

1. SCOPE : TP20
2. Adjust VR9 so that the DC level is 0 ± 0.1V DC.

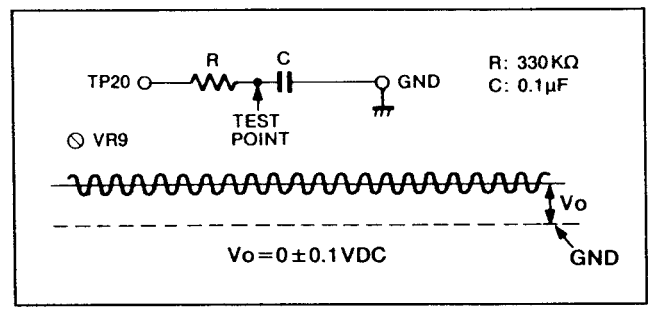

9-11. CTL PLAYBACK AMP GAIN ADJUSTMENT (S5 : SERVO)

SPEC	TP20 = 10Vpp +2V/-0V
TEST	TP20[H1]
MODE	REC PLAY → PLAY
TAPE	BLANK TAPE
M.EQ	OSCILLOSCOPE
INPUT	75% COLOR BAR to VIDEO IN
ADJ.	VR6[H1]

<STEP 1>

1. SCOPE : TP20
2. Supply a color bar signal to Video Input and recorded.
3. Playback a just recorded portion.
4. Adjust VR6 so that the signal level A is 10 +2 Vp-p.
5. Confirm that the CF MODE and SERVO LED on the Front Panel turned on.

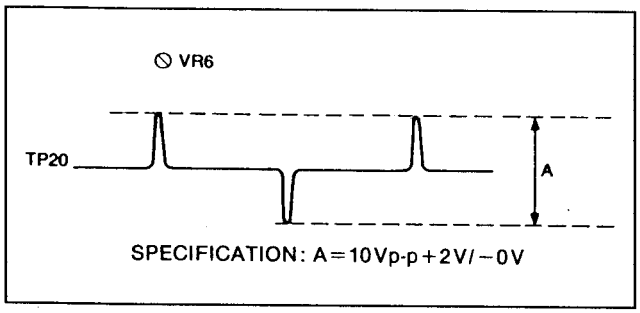

9-12. CTL PLAYBACK AMP F/V GAIN ADJUSTMENT (S5 : SERVO)

SPEC	TP20 = 10Vpp +2V/-0V
TEST	TP20[H1]
MODE	REC PLAY → VAR SPEED : × 0.52
TAPE	BLANK TAPE
M.EQ	OSCILLOSCOPE
INPUT	75% COLOR BAR to VIDEO IN
ADJ.	VR7[F3]

<STEP 1>

1. SCOPE : TP20
2. Supply a color bar signal to Video Input and recorded.
3. Playback a just recorded portion by VAR × 0.52.
4. Adjust VR7 so that the signal level A is 10 +2 Vp-p.

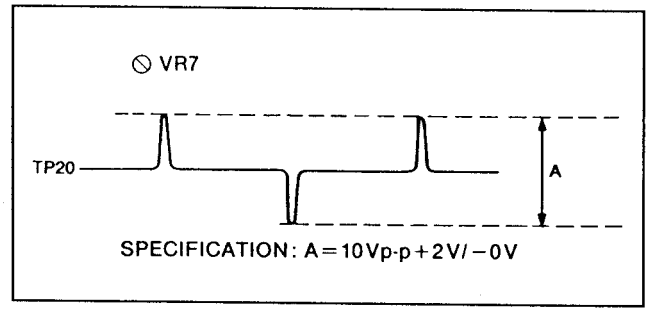

9-13. CTL REC CURRENT ADJUSTMENT (S5 : SERVO)

SPEC	TP44 = 70mV +5mV/-0mV
TEST	TP44[H4], PROBE 1:1, GND=TPG5[G3 or G4]
MODE	REC PLAY FAST FORMAT × 3 MODE
TAPE	SELF RECORDED TAPE
M.EQ	OSCILLOSCOPE
INPUT	COLOR BAR to VIDEO IN
ADJ.	VR10[G1]

<STEP 1>

1. SCOPE : TP44
2. Place the unit in the Fast Format (X3) mode.
3. Adjust VR10 so that the signal level A is 70mV + 5mV/0mV.

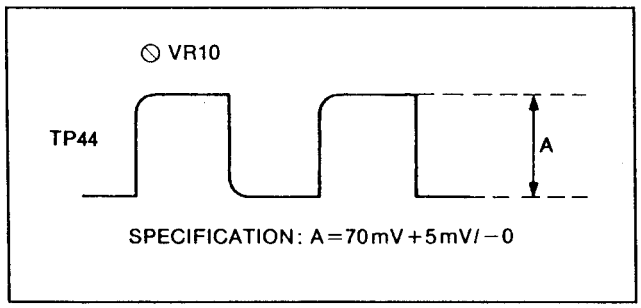

Cf:
Fast Format (X3) mode
HOME
SET UP
FORMAT
EXECUTE

9-14. PG SHIFTER ADJUSTMENT (S5:SERVO)

SPEC	T = 27.0 ± 0.5μsec
TEST	TP11 (REC AMP) TP37 (SERVO)
MODE	PLAY
TAPE	75% COLOR BAR PORTION ALIGNMENT TAPE
M.EQ	OSCILLOSCOPE
INPUT	
ADJ.	SW2[F2], SW3

<STEP 1>
MENU CONDITION

TEST MENU

Select the TRACKING FIX/VAR F10 to "FIX".

<STEP 2>
1. SCOPE CH1 : TP11 (REC AMP)
   SCOPE CH2 : TP37 (SERVO)
2. SCOPE TRIGGER : CH2
3. Adjust SW2, 3 and 4 so that the period T is as shown in Figure.

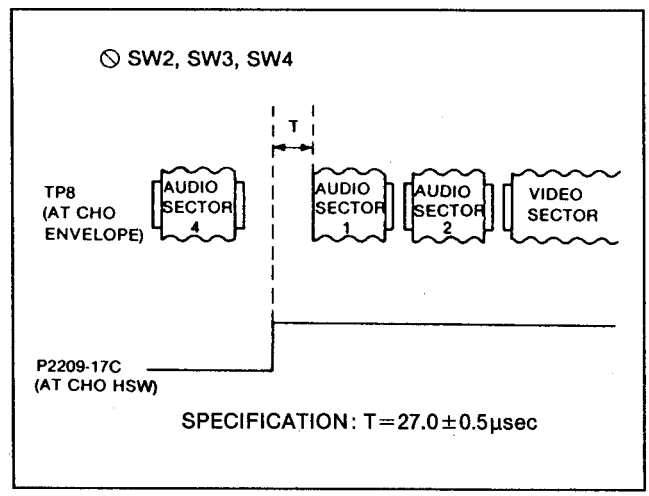

SW2: Fine adjustment
SW3: Pre fine adjustment
SW4: Coarse adjustment

10. TIME CODE SECTION

10-1. SUPER C CURRENT ADJUSTMENT (S6 : TIME CODE)

TEST	VIDEO OUT 3, TV MONITOR
MODE	EE1, EJECT
TAPE	
M.EQ	TV MONITOR
INPUT	75% COLOR BAR
ADJ.	VR1[B1]

<STEP 1>

1. Set the VTR EE1 and EJECT mode.
2. Connect the TV monitor to VIDEO OUT 3.
3. Confirm the Time Code super is displayed o the monitor.

<STEP 2>

1. Set TC/CHR mode.
2. Set the POSITION (F1) from FIX to ARRANGE.
3. Press CURSOR RIGHT many times until the Time Code super reaches the right side of the TV monitor.

<STEP 3>

1. Adjust VR1 so that the Time Code super is displayed at right side of the monitor as shown in Figure.

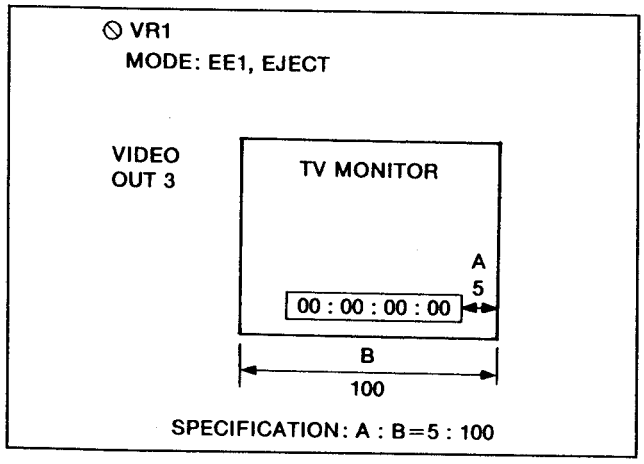

10-2. PB LTC LEVEL ADJUSTMENT (S6 TIME CODE SUB)

TEST	TP6201
MODE	PLAY
TAPE	SHUFFLING OFF 75% COLOR BAR ALIGNMENT TAPE
M.EQ	oscilloscope
INPUT	
ADJ.	VR6201

<STEP 1>

1. Place the VTR in the SHTL × 4mode.
2. Verify that the LTC level A as shown in figure.

<STEP 2>

1. Place the VTR in the normal play mode.
2. Adjust VR6201 so taht the LTC level is same as A level of SHTL × 4 mode.

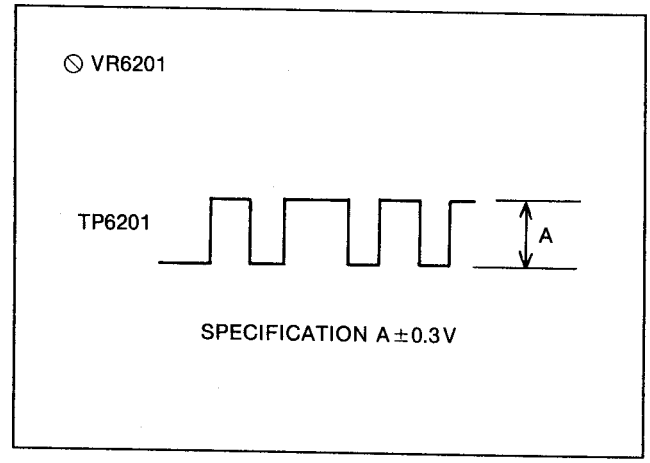

12. AUDIO PROCESS (S8) BOARD

12-1. DIGITAL AUDIO INTERFACE (1) ADJUSTMENT (S8 : AUDIO PROCESS)

TEST	TP401[H3]
MODE	EE (EJECT)
TAPE	
M.EQ	OSCILLOSCOPE
INPUT	75% COLOR BAR to VIDEO IN CH1 (L) 1kHz -18dB, CH2 (R) 2kHz -18dB DIGITAL AUDIO to DIGITAL AUDIO IN
ADJ.	VR401[A2], VR403[A1]

4000 SERIES

<STEP 1>

1. SCOPE : TP401
2. Confirm that the level is High (+5V).
3. If it is not, adjust VR401 and VR403 so that the level is High (+5V).
4. Confirm that the level is always High (+5V), when turn the power ON.

<STEP 2>

1. Disconnect the Digital Audio Input Connector.
2. Confirm that the level is LOW (0V).

12-2. DIGITAL AUDIO INTERFACE (2) ADJUSTMENT (S8 : AUDIO PROCESS)

TEST	TP402[I3]
MODE	EE (EJECT)
TAPE	
M.EQ	OSCILLOSCOPE
INPUT	75% COLOR BAR to VIDEO IN CH3 (L) 1kHz -18dB, CH4 (R) 2kHz -18dB DIGITAL AUDIO to DIGITAL AUDIO IN
ADJ.	VR402[A3], VR404[A2]

<STEP 1>

1. SCOPE : TP402
2. Confirm that the level is High (+5V).
3. If it is not, adjust VR402 and VR403 so that the level is High (+5V).
4. Confirm that the level is always High (+5V), when turn the power ON.

<STEP 2>

1. Disconnect the Digital Audio Input Connector.
2. Confirm that the level is LOW (0V).

12-3. CUE METER OFFSET ADJUSTMENT (S8 : AUDIO PROCESS)

SPEC	LESS THAN -50dB
TEST	CUE METER
MODE	STOP
TAPE	BLANK TAPE
M.EQ	OSCILLOSCOPE
INPUT	
ADJ.	VR4551[B4]

<STEP 1>

1. Set the VTR EE1 and STOP mode.
2. Adjust VR4551 so that the cue meter is less than -50dB.

13. VIDEO A/D PLL (S9) BOARD

Adjust with this section, perform after completed adjustment with L1 and L4 section.

MENU CONDITION

AUDIO IN MENU

Select the VIDEO INPUT F3 to "ANALOG"

VIDEO OUT SET UP MENU

Select the VIDEO STANBY OFF to "EE2"

STANBY OFF

VIDEO : TAPE, EE1, *EE2

MENU CONDITION

TEST MENU

VIDEO FUNCTION

Pless the SCH F10 Key on the Front Panel and display the INPUT REF SCH METER.

13-1. INPUT PLL ADJUSTMENT (S9 : VIDEO A/D PLL)

SPEC	REFER TO FIGURE
TEST	MONITOR TV
MODE	EE2 (EJECT)
TAPE	
M.EQ	MONITOR TV
INPUT	ANALOG COLOR BAR to VIDEO IN
ADJ.	VR401 (PLL ADJ.)[G4]

8000 SERIES

<STEP >

1. Connect the MONITOR TV to VIDEO OUT 1.
2. Confirm that the E-E picture is synchronized on Monitor TV.
3. If hte E-E picture is not synchronized on Monitor TV, adjust VR401 follow the below adjustment procedure.

<STEP 2>

1. Turn VR401 fully clockwise and turn power OFF and ON.
2. Slowly turn VR401 to counter clockwise and adjust VR401 so that the E-E picture synchronized on Monitor TV.
3. Memorized position of VR401 as shown in Figure (Position 1).

<STEP 3>

1. Turn VR401 fully clockwise and turn power OFF and ON.
2. Slowly turn VR401 to counter clockwise and adjust VR401 so that the E-E picture synchronized on Monitor TV.
3. Memorized position of VR401 as shown in Figure (Position 2).

<STEP 4>

1. Set the VR401 in centered (position 1) and (position 2) sa shown in Figure.

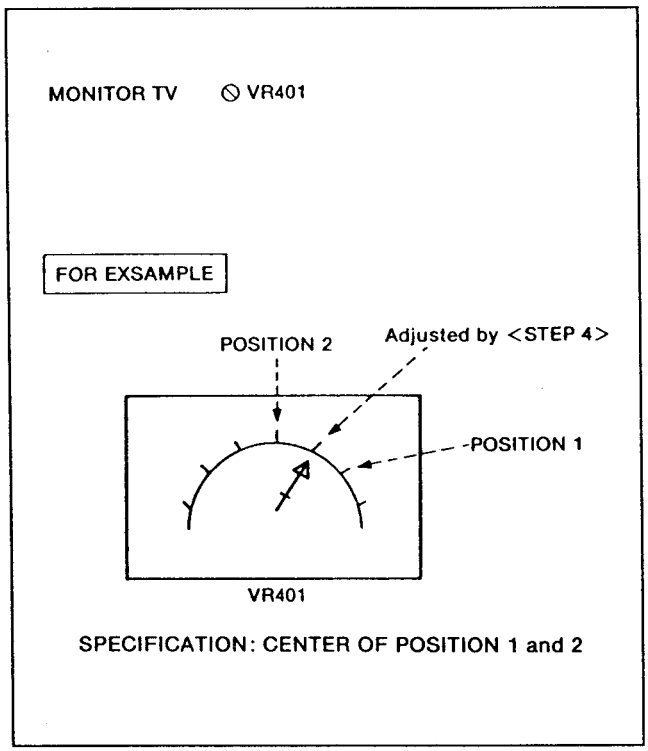

13-2. CF ADJUSTMENT (S9 : VIDEO A/D PLL)

SPEC	AS SHOWN FIGURE
TEST	1910 CF OUT, P218 - 8A
MODE	EE2 (EJECT)
TAPE	
M.EQ	OSCILLOSCOPE
INPUT	75% COLOR BAR TO VIDEO IN
ADJ.	VR602[H3]

<STEP 1>

1. SCOPE CH1 : 1910 CF OUT
   CH2 : P218 - 8A
2. Confirm that the CF output of signal generator is same phase as P218 - 8A signal.
3. If not, readjust VR602.

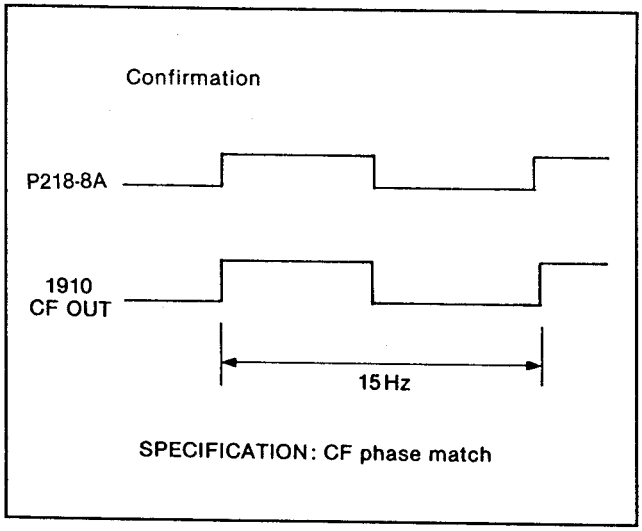

13-3. SCH ADJUSTMENT (S9 : VIDEO A/D PLL)

SPEC	AS SHOWN FIGURE
TEST	TP701[G2], TP703[G1]
MODE	EE2 (EJECT)
TAPE	
M.EQ	OSCILLOSCOPE
INPUT	COLOR BAR SIGNAL TO REF INPUT AND VIDEO IN
ADJ.	VR701[G1]

<STEP 1>

1. SCOPE CH1 : TP703 (TRIGGER)
   CH2 : TP701
2. Set the SW701 to ON.

<STEP 2>

1. Turn VR701 to clockwise.
2. Adjust VR701 so that the waveform phase is as shown in figure.

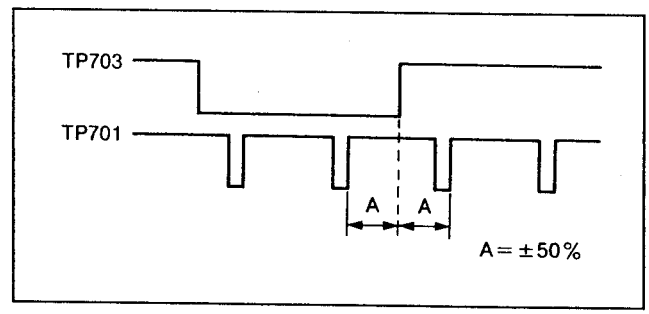

13-4. INCOME CF DETECTION ADJUSTMENT (1) (S9 : VIDEO A/D PLL)

SPEC	ALTERNATE +90° and -90°
TEST	INPUT SCH METER on TEST VIDEO MENU
MODE	EE2 (EJECT)
TAPE	
M.EQ	SCH METER
INPUT	1410 75% COLOR BAR to VIDEO IN
ADJ.	VR702 (SCH DET 2) [G1], VR705 (SCH GAIN) [I2], VR706 (SCH OFFSET) [I2]

<STEP 1>

1. CONNECTION
2. CONFIRMATION
   Confirmation that the SCH phase on SCH METER.

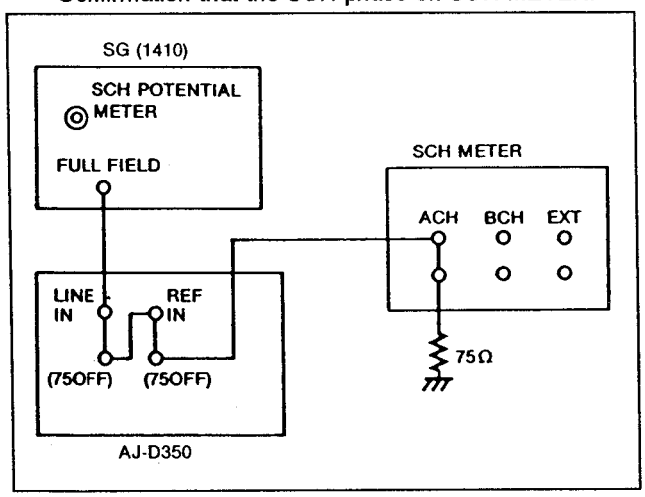

<STEP 2>

1. Set VR705 and VR706 to center position.
2. Adjust the Potential Meter on 1410 so that the SCH is -90° by turns.
3. Turn VR702 to fully clockwise.
4. Display the INPUT REF SCH METER as refer to MENU CONDITION 2 at the beginning of this SECTION.
5. Adjust VR702 so that the INPUT REF SCH METER displayed +90° and -90° by turns.
6. After finished this adjustment, perform 13-5 SCH METER ADJUSTMENT.

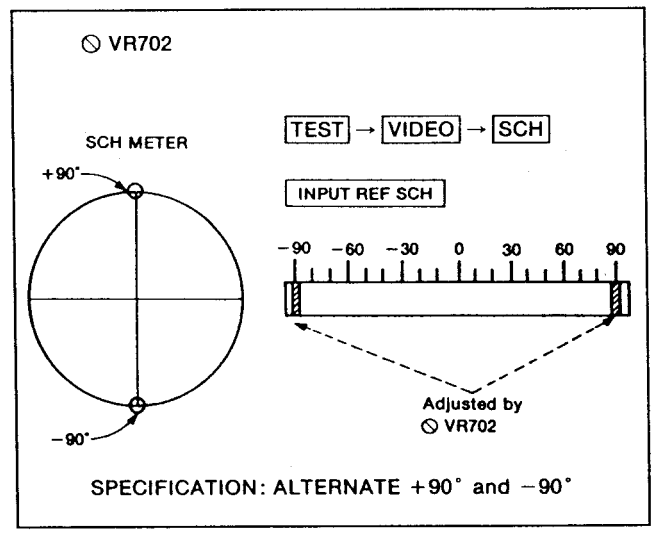

13-5. SCH METER ADJUSTMENT (S9 : VIDEO A/D PLL)

SPEC	
TEST	INPUT SCH METER on TEST VIDEO MENU
MODE	EE2 (EJECT)
TAPE	
M.EQ	SCH METER
INPUT	1410 75% COLOR BAR to VIDEO IN
ADJ.	VR705 (SCH GAIN)[I2], VR706 (SCH OFFSET)[I2]

<STEP 1>

MACHINE CONDITION

Refer to <STEP 1> on item 13-2.

<STEP 2>

1. Confirm that the SCH of SW701 is set to ON position.

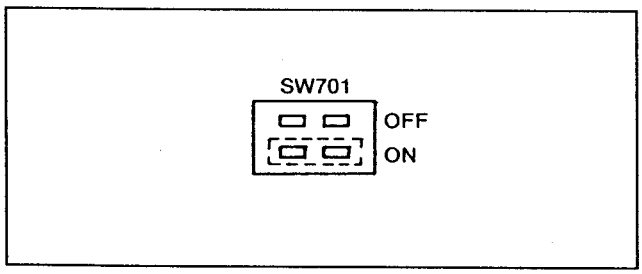

<STEP 3>

1. Set the SW701 to ON side as shown in Figure.
2. Adjust the Potention Meter VR on 1410 so that the SCH is +45° at SCH METER.
3. Display the INPUT SCH METER as refer to MENU CONDITION 2 at the beginning of this SECTION.
4. Adjust VR706 so that the INPUT SCH METER displayed +45°.

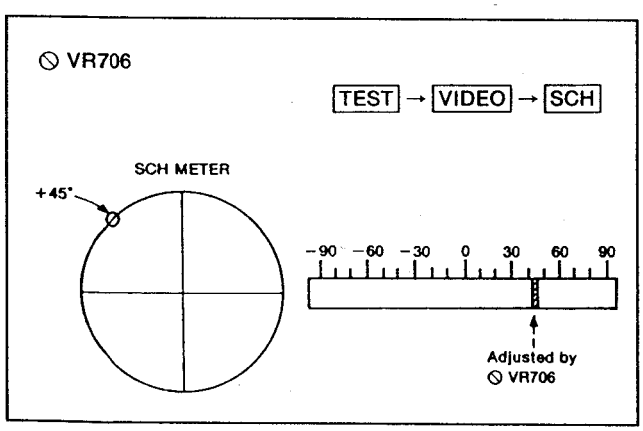

<STEP 4>

1. Adjust the Potention Meter VR on 1410 so that the SCH is +45° at SCH METER.
2. Display the INPUT SCH METER as refer to MENU CONDITION 2 at the beginning of this SECTION.
3. Adjust VR705 so that the INPUT SCH METER displayed -45°.

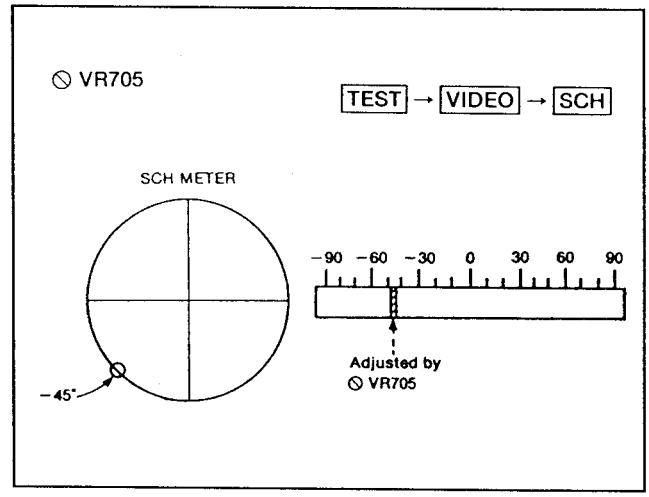

<STEP 5>

1. Re-adjust above <STEP 3> and <STEP 4> until stabilize the SCH indication.

13-6. INPUT SCH DETECTION ADJUSTMENT (S9 : VIDEO A/D PLL)

SPEC	Voltage at TP707, TP708 = TP706 ± 20mV
TEST	TP706[I1], TP707[I1], TP708[I2]
MODE	EE2 (EJECT)
TAPE	
M.EQ	SCH METER OSCILLOSCOPE
INPUT	1410 75% COLOR BAR to VIDEO IN
ADJ.	VR703 (SCH - H)[I2], VR704 (SCH - L)[I2]

<STEP 1>

MACHINE CONDITION

Refer to <STEP 1> on item 13-2.

<STEP 2>

1. Confirm that the SCH of SW701 is set to ON position.

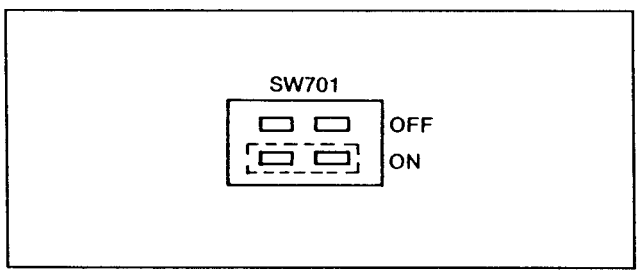

<STEP 3>

1. SCH METER : SCH mode
2. Adjust the Potention Meter VR on 1410 so that the SCH is +70° at SCH METER.
3. SCOPE CH1 : TP707
   CH2 : TP706
4. Measure the voltage at TP706.
5. Adjust VR703 so that the DC voltage at TP707 is TP706 ± 20mV.

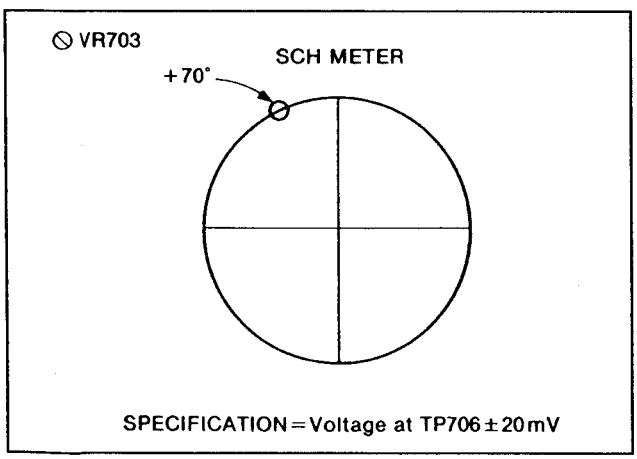

<STEP 4>

1. Adjust the Potention Meter VR on 1410 so that the SCH is -70° at SCH METER.
2. SCOPE CH1 : TP708
   CH2 : TP706
3. Adjust VR703 so that the DC voltage at TP708 is TP706 ± 20mV.

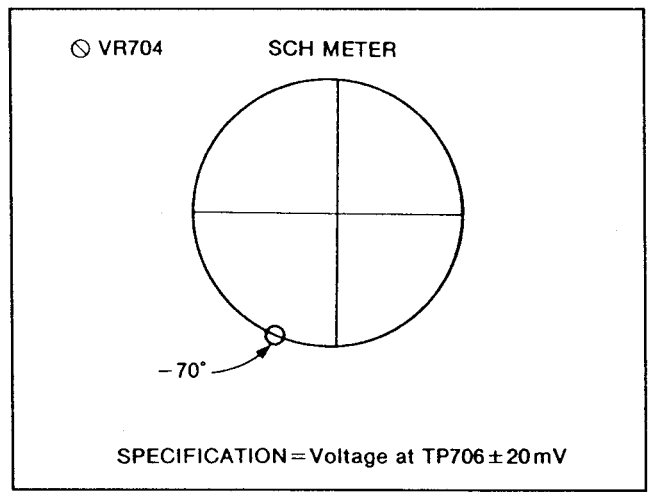

13-7. INCOME CF DETECTION ADJUSTMENT (S9 : VIDEO A/D PLL)

SPEC	FRONT SCH METER DISPLAY 0°
TEST	INPUT SCH METER on TEST VIDEO MENU
MODE	EE2 (EJECT)
TAPE	
M.EQ	
INPUT	DIGITAL 75% COLOR BAR to VIDEO IN
ADJ.	VR702 (SCH DET 2)[G1]

<STEP 1>

MACHINE CONDITION

Refer to <STEP 1> on item 13-2.

<STEP 2>

1. Confirm that the SCH of SW701 is set to ON position.

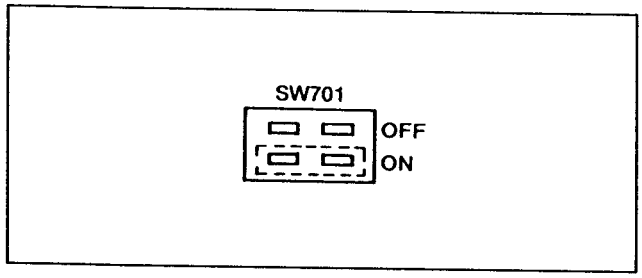

<STEP 3>

1. Turn the power OFF and ON.
2. Display the OUT REF SCH METER as refer to MENU CONDITION 2 at the beginning of this SECTION.
3. Adjust VR702 so that the OUT REF SCH METER displays 0°.

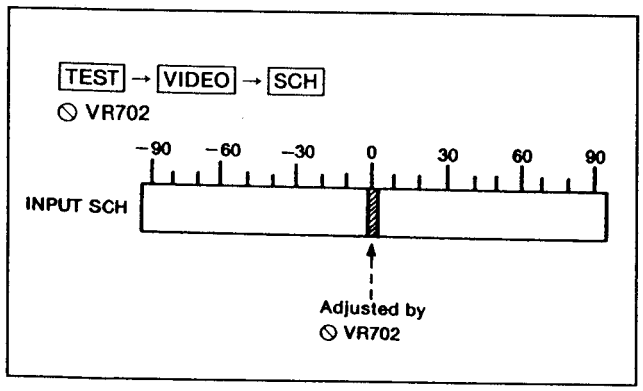

<STEP 4>

1. Confirm that the SW701 is set to ON position.

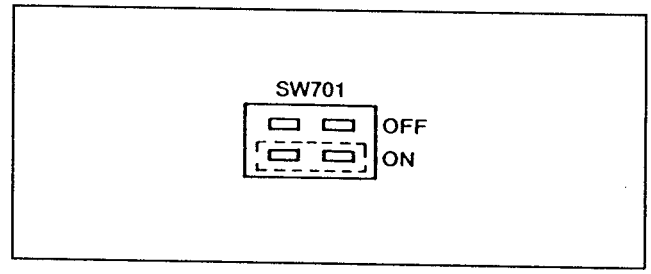

13-8. VIDEO PHASE ADJUSTMENT (S9 : VIDEO A/D PLL)

SPEC	REFER TO FIGURE
TEST	VIDEO OUT IC611-Pin 2, TP401[G2]
MODE	EE2 (EJECT)
TAPE	
M.EQ	SCH METER OSCILLOSCOPE
INPUT	DIGITAL 75% COLOR BAR to VIDEO IN
ADJ.	VR601 (H PHASE)[G2]

<STEP 1>

1. Connect the VTR as follows.

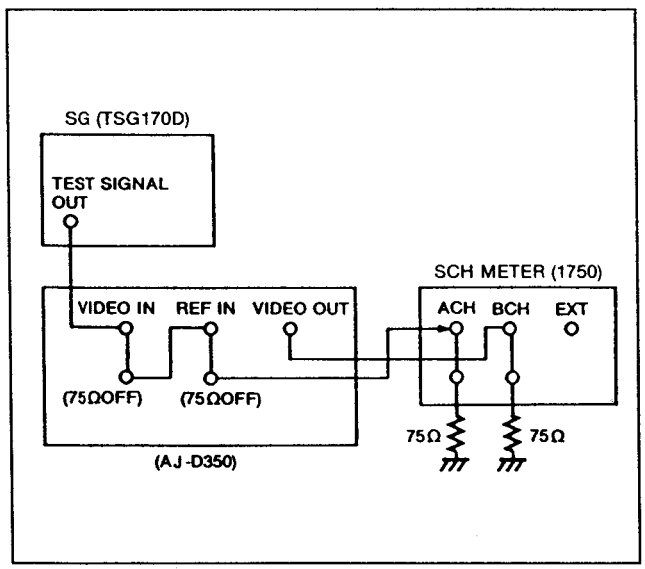

<STEP 2>

1. Set the Dip SW 151 on the L2 P.C.B. as follow as shown in Figure.

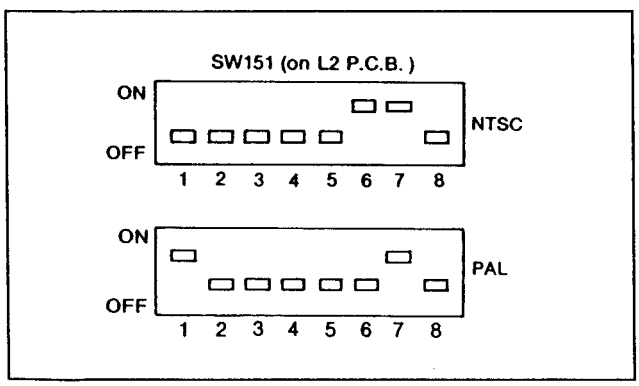

<STEP 3>

1. SCOPE CH1 : TP601
   CH2 : TP401
2. Adjust VR601 so that the relation between HC and HO signal as shown in Figure.

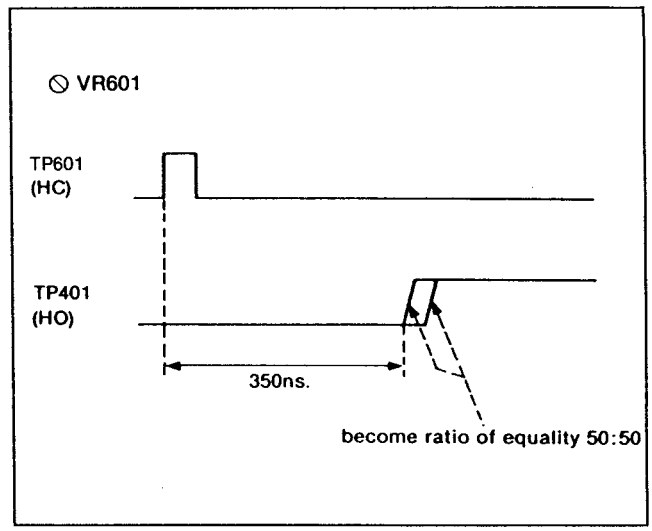

13-9. VIDEO INPUT CLAMP ADJUSTMENT (S9 : VIDEO A/D PLL)

SPEC	A = 0V (FLAT)
TEST	VIDEO OUT 1
MODE	EE2 (EJECT)
TAPE	
M.EQ	WAVEFORM MONITOR
INPUT	DIGITAL RAMP SIGNAL to VIDEO IN
ADJ.	VR102 (CLAMP DC)[B3]

<STEP 1>

1. WFM MONITOR : VIDEO OUT 1
2. Adjust VR102 so that the A portion is flat as shown in Figure.

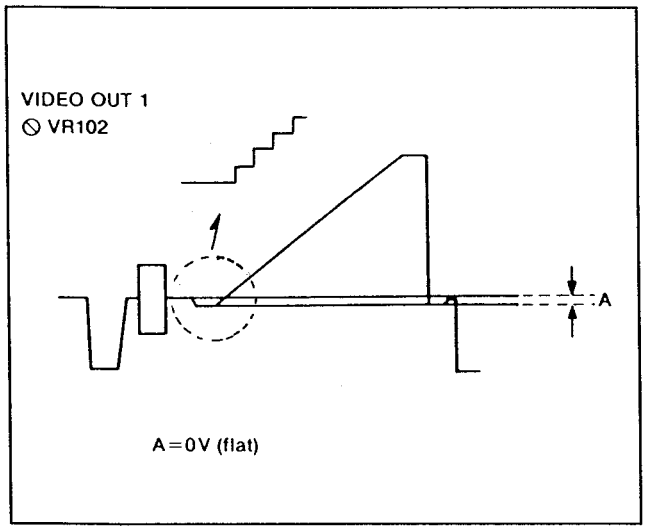

<STEP 2>

1. Expand WFM monitor by × 5 mode.
2. Confirm that there are 3 stairs in the 5 divisions of WFM monitor as shown in figure.

13-10. VIDEO INPUT LEVEL ADJUSTMENT (S9 : VIDEO A/D PLL)

SPEC	VIDEO OUT 1 = 1V ± 0.002Vpp
TEST	VIDEO OUT 1
MODE	EE2 (EJECT)
TAPE	
M.EQ	WAVEFORM MONITOR
INPUT	DIGITAL 75% COLOR BAR to VIDEO IN
ADJ.	VR101 (A/D LEVEL [A3]

<STEP 1>

1. WFM MONITOR : VIDEO OUT 1
2. Adjust VR101 so that the Video Level (A) is 1 ± 0.002V as shown in Figure.

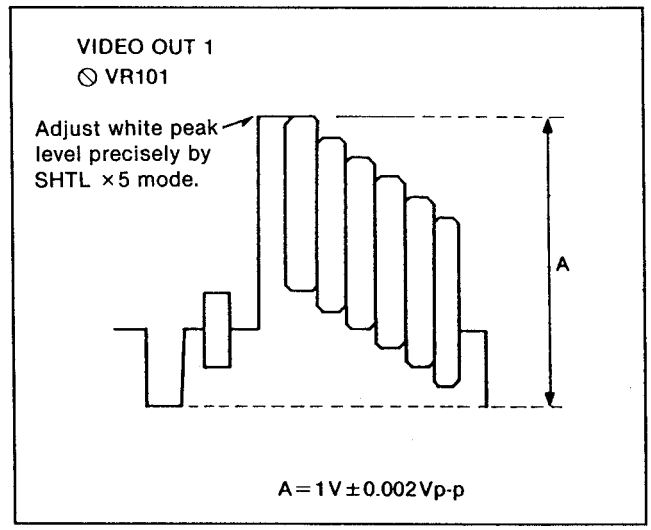

13-11. VIDEO INPUT FREQUENCY ADJUSTMENT (1) (S9 : VIDEO A/D PLL)

SPEC	RIPPLE ± 1%
TEST	VIDEO OUT 1
MODE	EE2 (EJECT)
TAPE	
M.EQ	WAVEFORM MONITOR
INPUT	DIGITAL H SWEEP to VIDEO IN
ADJ.	C170[A2]

<STEP 1>

1. WFM MONITOR : VIDEO OUT 1
2. Adjust C170 so that level from 1MHz to 4MHz is flat as shown in Figure.

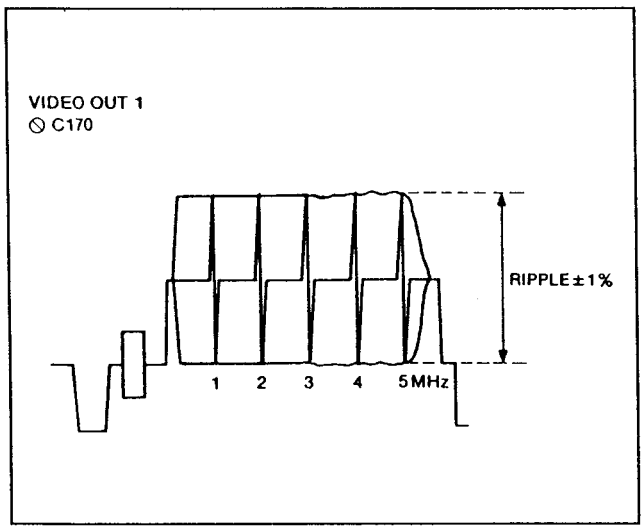

13-12. VIDEO INPUT FREQUENCY ADJUSTMENT (2) (S9 : VIDEO A/D PLL)

SPEC	CENTER OF THE SCALE
TEST	VIDEO OUT 1
MODE	E-E (EJECT)
TAPE	
M.EQ	VECTOR SCOPE
INPUT	DIGITAL 75% COLOR BAR to VIDEO IN
ADJ.	C170[A2], VR103[B3]

<STEP 1>

1. WFM MONITOR:VIDEO OUT 1
2. Adjust C170 so that each vector level is in center the scale of vector scope.
3. Adjust VR103 so that the each vector dot is in center of the box.

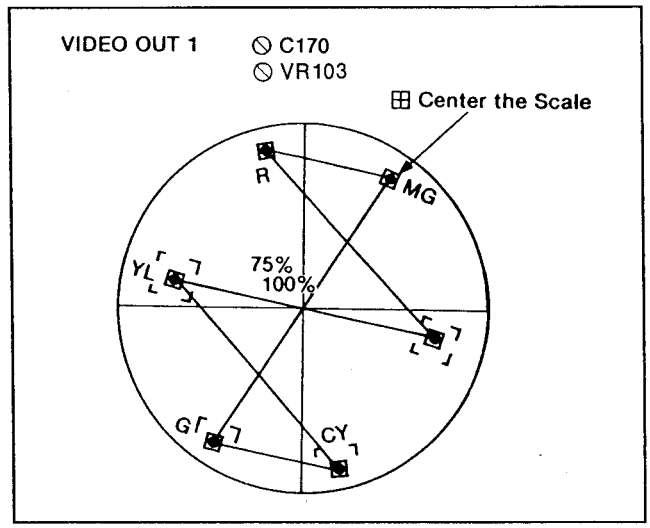

13-13. INPUT LEVEL METER ADJUSTMENT (S9 : VIDEO A/D PLL)

SPEC	INPUT LEVEL METER = 0dB
TEST	INPUT LEVEL METER
MODE	E-E (EJECT)
TAPE	
M.EQ	
INPUT	(TSG273) 100% COLOR BAR to VIDEO IN
ADJ.	VR201 (BOT DC ADJ.)[D2], VR202 (AD VRT ADJ.)[D3]

<STEP 1>

MENU CONDITION

VIDEO IN MENU : F5
Select the LEVEL DET to "PEAK".

<STEP 2>

1. Adjust VR202 so that the VIDEO INPUT LEVEL METER is 0dB.

<STEP 3>

MENU CONDITION

VIDEO IN MENU : F5
Select the LEVEL DET to "SYNC".

<STEP 4>

1. Adjust VR201 so that the VIDEO INPUT LEVEL METER is 0dB.

14. REC AMP BOARD

Confirm that the Machine Condition with L2, L3, L4, S1 and S2 board, refer to Machine Condition at the beginning of SECTION 5 (REC/PLAY CH0/CH1)

14-1-(1). REC 2nd HARMONICS DISTORTION ADJUSTMENT (1) (REC AMP)

SPEC	MINIMUM 2ND HARMONICS
TEST	TP3 (CH0 A0)[B2], TP4 (CH0 B)[B2]
MODE	CW RECORDING
TAPE	SELF RECORDING TAPE
M.EQ	SPECTRUM ANALYZER
INPUT	75% COLOR BAR
ADJ.	VR200[B6]

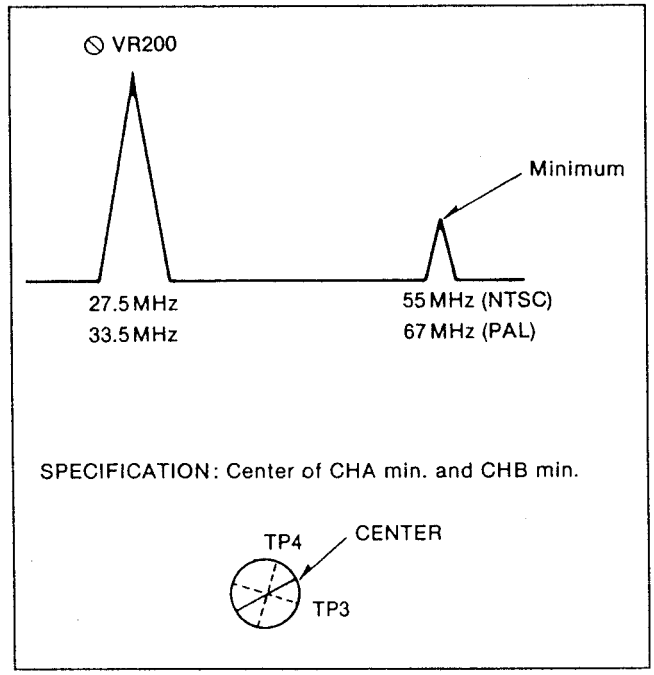

<STEP 1>
Set the spectrum analyzer as follows.

(REG 3)

REFERENCE LEVEL	:	0dBm
ATTEN	:	10dB
DIV (dB/DIV)	:	10dB/div
START FREQUENCY	:	20MHz
STOP FREQUENCY	:	70MHz
RES BW	:	300kHz
VIDEO BW	:	10kHz
SWEEP TIME	:	30m sec
TRIGGER	:	FREE RUN

<STEP 2>

1. Insert a self recording tape to the VTR and set the VTR on Recording mode.
2. Set the Front Menu to CW Recording mode as follows.

TEST → RF → BS + F8 →
(CURSOR CENTER) → ↓ ↓
→ →

3. Connect the spectrum analyzer probe to TP3.
4. SP USER MENU
   Set the item "HEAD" to A from NOR
5. Adjust VR200 so that the 2ND Harmonics becomes minimum and memorize the VR200 position.
6. Connect the spectrum analyzer probe to TP4.
7. SP USER MENU

   Set the item "HEAD" to B from A

8. Adjust VR200 so that the 2ND Harmonics becomes minimum and memorize the VR200 position.
9. Set the VR200 at certer between item 5 and 8.
10. Press HOME key.

14-1-(2). REC 2nd HARMONICS DISTORTION ADJUSTMENT (2) (REC AMP)

SPEC	MINIMUM 2ND HARMONICS
TEST	TP7 (CH1 A)[B1], TP8 (CH1 B)[B1]
MODE	CW RECORDING
TAPE	SELF RECORDING TAPE
M.EQ	SPECTRUM ANALYZER
INPUT	75% COLOR BAR
ADJ.	VR201[B6]

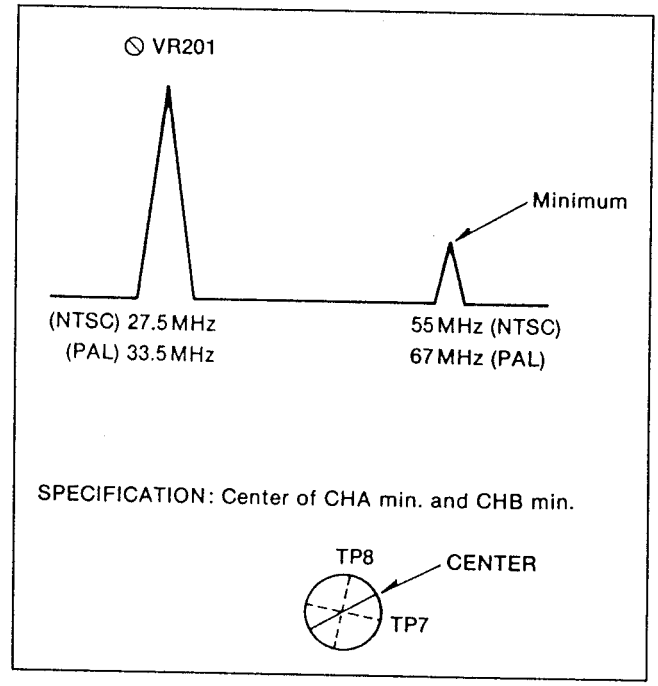

<STEP 1>

Set the spectrum analyzer as follows.
(REG 3)

REFERENCE LEVEL	:	0dBm
ATTEN	:	10dB
DIV (dB/DIV)	:	10dB/div
START FREQUENCY	:	20MHz
STOP FREQUENCY	:	70MHz
RES BW	:	300kHz
VIDEO BW	:	10kHz
SWEEP TIME	:	30m sec
TRIGGER	:	FREE RUM

<STEP 2>

1. Insert a self recording tape to the VTR and set the VTR on Recording mode.
2. Set the Front Menu to CW Recording mode as follows.
   TEST → RF → BS + F8 →
   (CURSOR CENTER) → ↓ ↓
   → →
3. Connect the spectrum analyzer probe to TP7.
4. SP USER MENU
   Set the item "HEAD" to A from NOR
5. Adjust VR201 so that the 2ND Harmonics becomes minimum and memorize the VR201 position.
6. Connect the spectrum analyzer probe to TP8.
7. SP USER MENU
   Set the item "HEAD" to B from A
8. Adjust VR201 so that the 2ND Harmonics becomes minimum and memorize the VR201 position.
9. Set the VR201 at certer between item 5 and 8.
10. Press HOME key.

14-2. REC CURRENT and REC EQUALIZER ADJUSTMENT (CH0) (REC AMP)

SPEC	REFER TO FIGURE
TEST	TP8 (S1 BOARD), TP207 (REC AMP BOARD) → EXT IN
MODE	REC mode
TAPE	75% COLOR BAR ALIGNMENT TAPE SELF RECORDING TAPE
M.EQ	SPECTRUM ANALYZER, 50Ω PROBE WITH CLIP
INPUT	SHUFFLING OFF 75% COLOR BAR ALIGNMENT TAPE
ADJ.	FRONT PANEL REC CURRENT (S MENU) VR2 (CH0 A FREQ), VR4 (CH0 B FREQ)

<STEP 1>
Set the spectrum analyzer as follows.
(REG 4)

REFERENCE LEVEL	:	-10.0dBm
ATTEN	:	10dB
DIV (dB/DIV)	:	5dB/div
START FREQUENCY	:	0Hz
STOP FREQUENCY	:	50MHz
RES BW	:	1MHz
VIDEO BW	:	3kHz
SWEEP TIME	:	300m sec
TRIGGER	:	EXT(HEAD SW)

<STEP 2>
Set the VTR shuffling off, error correction off and error concealment off mode.
L2 SW51-2 (OFF), SW51-3 (OFF)
L3 SW1 (OFF), SW2 (OFF), SW3 (OFF), SW4 (OFF)
L4 SW802 (OFF)

<STEP 3>
1. Connect the spectrum analyzer probe to TP8 on S1 Board.
2. Playback a Shuffling off 75% color bar alignment tape.

<STEP 4>
1. SCOPE CH1 : TP2610 (S4)
   SCOPE CH2 : TP2619 (S4)
2. Set the machine condition as follows.
   VIDEO OUT → SET UP → STATE → [ ](CURSOR CENTER)
   [→] → [→] → [→](EDIT REC) → TAPE → MANUAL EDIT → INSERT
3. Set the VTR PLAY mode.
4. Confirm that the waveform is shown below and the envelope level on the front panel bar graph becomes maximum.
   If not, adjust Front Panel adjustment knob so that the these two conditions will be satisfied.
   TEST → SERVO → AT → F4(CENTER) → EXIT → EXIT
   → RF → AT HEIGHT (F7) → BS+F8 → [ ](CURSOR CENTER) → F+[←]
   A and B Heads are selected by cusor key [←] [→].

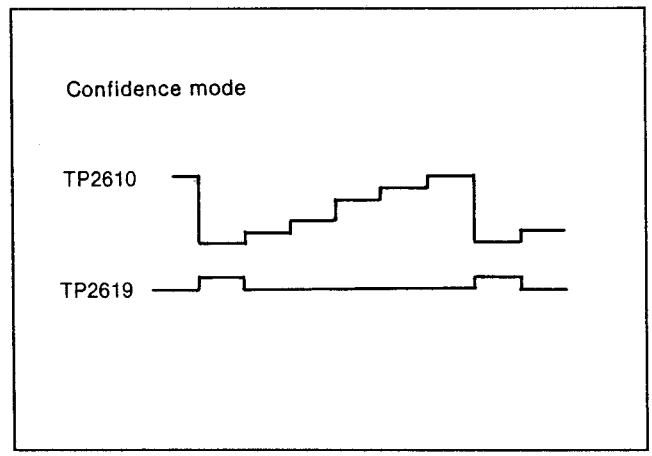

Note: This AT HEIGHT adjustment is tentative adjustment to get maximum envelope in correct AT Trace. Actual AT Adjustment must be done in AT (S4) Adjustment.

<STEP 5>
1. Memorize the frequency characteristics waveform to VIEW B of the spectrum analyzer.
2. Set the machine condition as follows.

   MANUAL EDIT → INSERT (INSERT OFF mode).

Note: STEP 4 and 5 place the AT Heads in the confidence position, when in Playback mode.
The frequency characteristics can then be memorized and compared to the Rec frequency characteristics.

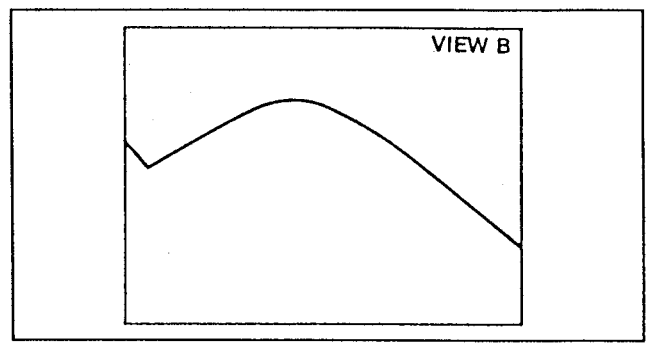

<STEP 6>

1. Eject the alignment tape and insert a self recording tape.
2. Connect the spectrum analyzer probe to TP8 on S1 Board.
3. Set the VTR in Rec mode.
4. Make sure that the AT Head height is correct position to get maximum envelope on CH0 display.
5. Set the FRONT MENU to REC CURRENT mode.

   TEST → RF → F4(REC CURRENT) → BS+F8 → [ ] (CURSOR CENTER) → F+[←]
   CH0 A, CH0 B, CH1 A, CH1 B Heads are selected by cursor key [↑] [↓].

6. Confirm that envelope on the bar graph is still keeping maximum level. If not, back to AT-HEIGHT adjusting menu and readjust Front Panel adjusting knob to get maximum level of envelope.
7. Set spactrum analyzer to REG 5. (refer to set up chart).

<STEP 7>

Adjust the REC Current CH0 A and CH0 B so that the waveform level is same level with the alignment tape play level at 5MHz.

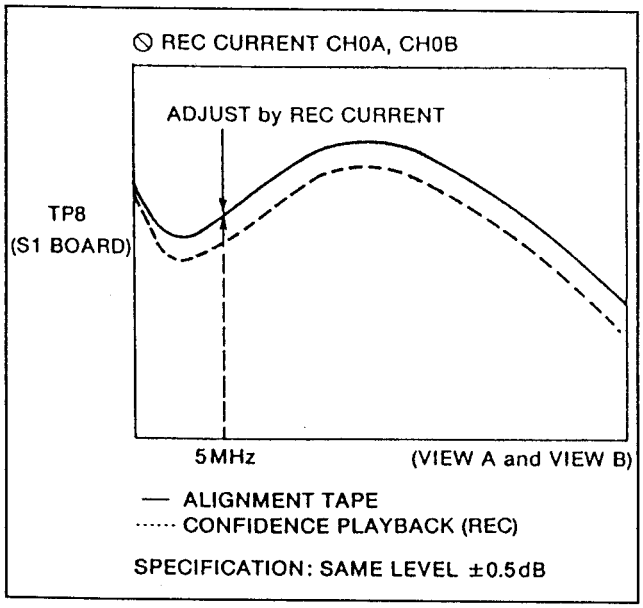

<STEP 8>

1. CH0B Rec Current Adjustment is same as CH0A which is described STEP 6- ~ STEP 7. (Just change the CH).

<STEP 9>

1. Adjust VR2 (CH0 A) and VR4 (CH0 B) so that the waveform level is same at 30MHZ as shown below and confirm that the error rate on the front panel is minimum.
2. If it is not, set the CH0 B to -128 by using adjustment VR on the front panel. And adjust VR2 (CH0 A) so that the error rate is minimum and same level.
3. Adjust VR4 (CH0 B) so that the error rate is minimum by using the same method above.

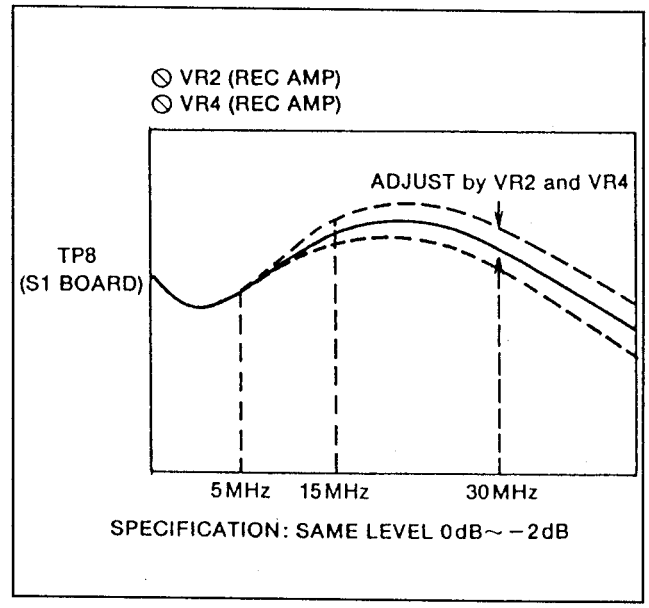

<STEP 10>

1. If level is increased at 30MHz to 35MHz, adjust REC CURRENT CH0 A and CH0 B so that the output level at 5MHz is same level. (A:0).
2. If the level is increased at 5MHz, adjust REC CURRENT CH0 A and CH0 B so that the output level at 5MHz is same increasing value. (a:c).

Caution : Adjustment point of VR2 and VR4 are as shown below.

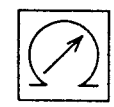

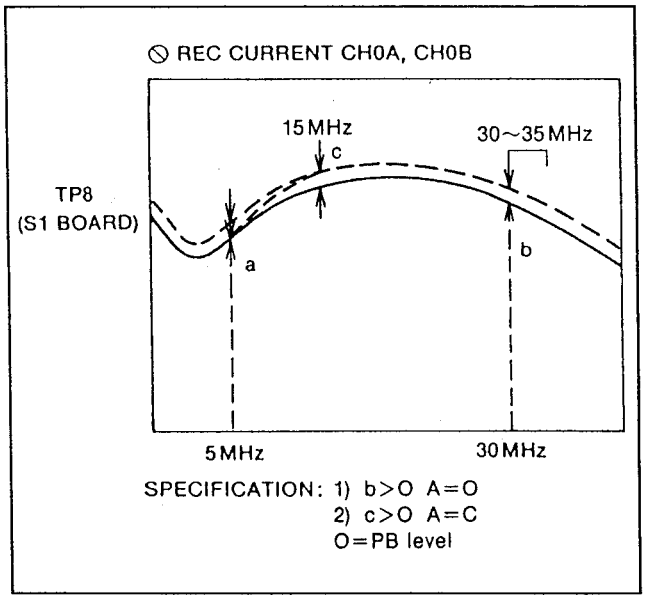

<STEP 11>

1. Set the machine condition as follows.

   VIDEO OUT → SET UP → STATE → [ ](CURSOR CENTER)
   [→] → [→] → [→](EDIT REC) → TAPE → MANUAL EDIT → INSERT

2. Set the VTR PLAY mode.
3. Confirm that the waveform level is same and error rate is minimum.

<STEP 12>

Set the AT HEIGHT Front Menu to all 0.

14-3. REC CURRENT and REC EQUALIZER ADJUSTMENT (CH1) (REC AMP)

SPEC	REFER TO FIGURE
TEST	TP8(S2 BOARD), TP207(S2 BOARD) → EXT IN
MODE	VAR × 1
TAPE	75% COLOR BAR ALIGNMENT TAPE SELF RECORDING TAPE
M.EQ	SPECTRUM ANALYZER, 50Ω PROBE WITH CLIP
INPUT	SHUFFLING OFF 75% COLOR BAR ALIGNMENT TAPE
ADJ.	FRONT PANEL REC CURRENT (SP MENU) VR7 (CH1 A FREQ), VR9 (CH1 B FREQ)

<STEP 1>

Set the spectrum analyzer as follows.
(REG 4)

REFERENCE LEVEL	:	-10dBm
ATTEN	:	10dB
DIV (dB/DIV)	:	5dB/div
START FREQUENCY	:	0Hz
STOP FREQUENCY	:	50MHz
RES BW	:	1MHz
VIDEO BW	:	3kHz
SWEEP TIME	:	300m sec
TRIGGER	:	EXT (HEAD SW)

<STEP 2>

Set the VTR shuffling off, error correction off and error concealment off mode.

L2 SW51-2 (OFF), SW51-3 (OFF)
L3 SW1 (OFF), SW2 (OFF), SW3 (OFF), SW4 (OFF)
L4 SW802 (OFF)

<STEP 3>

1. Connect the spectrum analyzer probe to TP8 on S2 Board.
2. Playback a Shuffling off 75% color bar alignment tape.

<STEP 4>

1. SCOPE CH1 : TP2610 (S4)
   SCOPE CH2 : TP2619 (S4)
2. Set the machine condition as follows.

   VIDEO OUT → SET UP → STATE → [ ](CURSOR CENTER)
   [→] → [→] → [→](EDIT REC) →
   TAPE → MANUAL EDIT → INSERT

3. Set the VTR PLAY mode.
4. Confirm that the waveform is shown below and the envelope level on the front panel bar graph becomes maximum.
   If not, adjust Front Panel adjustment knob so that the these two conditions will be satisfied.

   TEST → SERVO → AT → F4(CENTER) → EXIT → EXIT → RF → AT HEIGHT → BS+F8 → [ ](CURSOR CENTER) → F+[←]
   A and B Heads are selected by cusor key [←] [→].

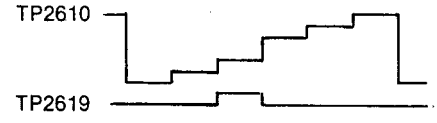

SPECIFICATION: TP2619 pulse is located at the third step of TP2610

Note: This AT HEIGHT adjustment is tentative adjustment to get maximum envelope in correct AT Trace. Actual AT Adjustment must be done in AT (S4) Adjustment.

<STEP 5>

1. Memorize the frequency characteristics waveform to VIEW B of the spectrum analyzer.
2. Set the machine condition as follows.
   MANUAL EDIT → INSERT (INSERT OFF mode).

Note: STEP 4 and 5 is place the AT Heads in the confidence position, when in Playback mode.
The frequency characteristics can be memorized and compared to the Rec frequency characteristics.

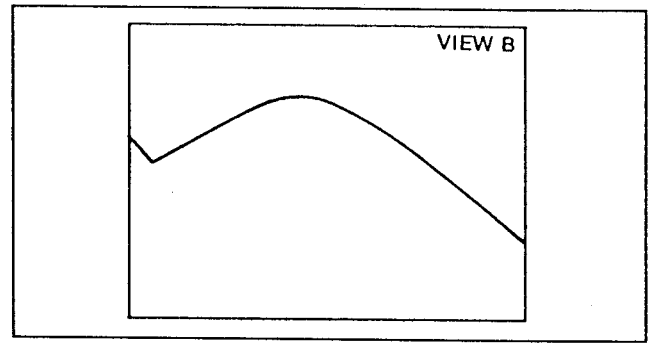

<STEP 6>

1. Eject the alignment tape and insert a self recording tape.
2. Connect the spectrum analyzer probe to TP8 on S2 Board.
3. Set the VTR in Rec mode.
4. Make sure that the AT Head height is correct position. to get maximum envelope on CH1 display.
5. Set the FRONT MENU to REC CURRENT mode.

   TEST → RF → F4(REC CURRENT) → BS+F8 →
   [ ] (CURSOR CENTER) → F+[←]
   CH0 A, CH0 B, CH1 A, CH1 B Heads are selected by cursor key [↑] [↓].

6. Confirm that envelope on the bar graph is still keeping maximum level. If not back to AT-HEIGHT adjusting menu and readjust Front Panel adjusting knob to get maximum level of envelope.
7. Set spectrum anallyzer to REG 5. (refer to set up chart).

<STEP 7>

Adjust the REC Current CH1 A and CH1 B so that the waveform level is same level with the alignment tape play level at 5MHz.

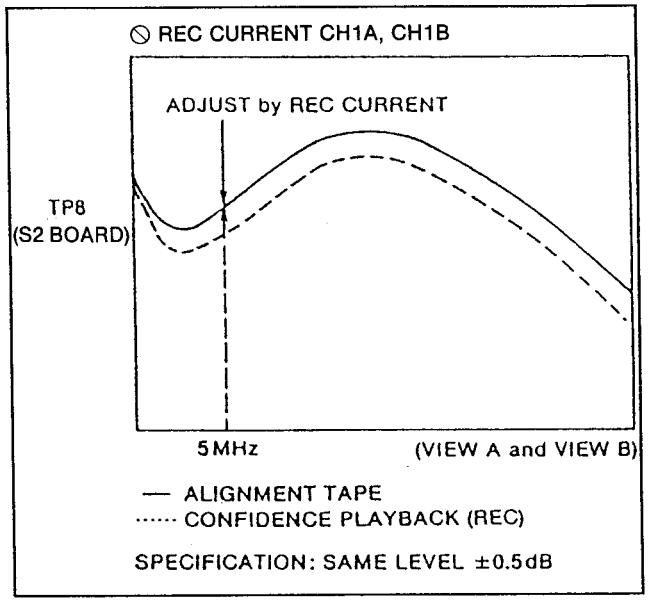

<STEP 8>

1. CH1B Rec Current Adjustment is same as CH1A which is described STEP 6-3 ~ STEP 7 (Just change the CH).

<STEP 9>

1. Adjust VR7 (CH1 A) and VR9 (CH1 B) so that the waveform level is same at 30MHZ as shown below and confirm that the error rate on the front panel is minimum.
2. If it is not, set the CH1 B to -128 by using adjustment VR on the front panel. And adjust VR7 (CH1 A) so that the error rate is minimum and same level.
3. Adjust VR9 (CH1 B) so that the error rate is minimum by using the same method above.

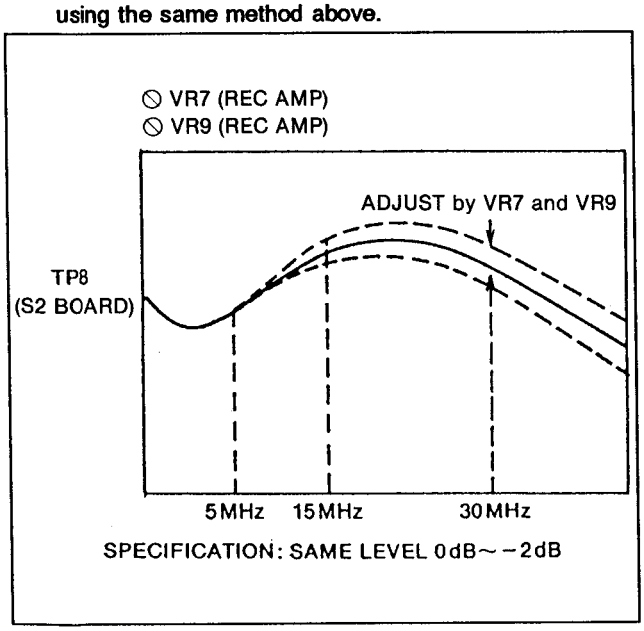

<STEP 10>

1. If level is increased at 30MHz to 35MHz, adjust REC CURRENT CH1 A and CH1 B so that the output level at 5MHz is same level. (A:0).
2. If the level is increased at 5MHz, adjust REC CURRENT CH1 A and CH1 B so that the output level at 5MHz is same increasing value. (a:c).

Caution : Adjust point of VR7 and VR9 are as shown below.

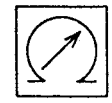

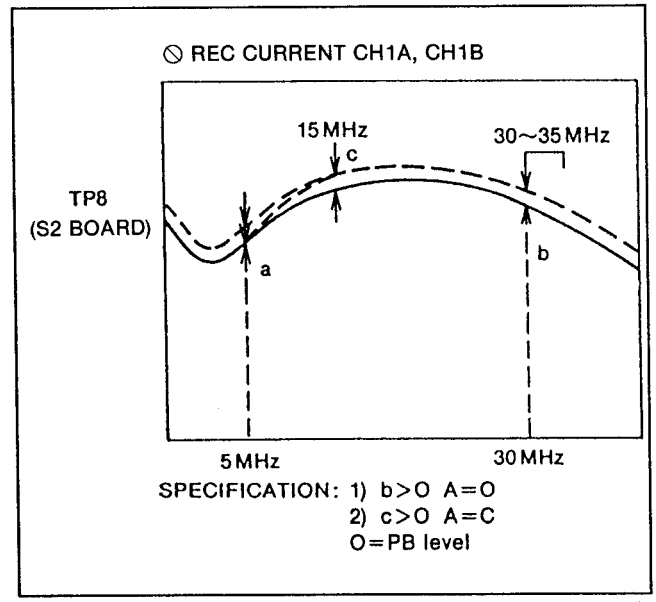

<STEP 11>

1. Set the machine condition as follows.

   VIDEO OUT → SET UP → STATE → [ ](CURSOR CENTER)
   [→] → [→] → [→](EDIT REC) → TAPE → MANUAL EDIT → INSERT

2. Set the VTR PLAY mode.
3. Confirm that the waveform level is same and error rate is minimum.

<STEP 12>

Set the AT HEIGHT Front Menu to all 0.

<STEP 13>

1. Save the REC CURRENT DATA as follows TEST MENU.
   BS + F8 → F9 (Select USER) → F + F11 (SAVE)

Note: When save the data, REC CURRENT data display will be disappeared.

ADJUSTMENT KNOW HOW (INFORMATION)

1. Insert a cassette and place the unit in recording mode.
2. Set the machine condition as follows.
   TEST → RF → REC CURR → [ ] (CURSOR CENTER)→ [→] → (REC CURR).
   CH0 A, CH0 B CH1 A or CH1 B Heads are selected by cursor key [↑] [↓].
3. Adjust each CH by using the adjustment VR on the front panel so that the output envelope is maximum and minimum error on the display.

* In confidence mode, if adjust CH0 A, change the CH0 B envelope output. (CHA recording, CHB playback in confidence mode).

4. Adjust VR2, VR4, VR7 and VR9 on the REC AMP board so that the error rate is minimum.
5. After this adjustment check the frequency characteristics waveforms by using the spectrum analyzer. Refer to the item 14-2 and 14-3.
6. This specification is minimum error rate. (Inner Error rate is less than 4 on the display bar.)
7. If out of specification check the frequency characteristic waveform by using the spectrum analyzer. Connect the spectrum analyzer to TP8 on the S1 board and play back the alignment tape (1) and memorize the frequency characteristic waveform.
8. After memorize, place the unit in the recording mode.
9. If output waveform is same as the playback waveform, readjust the VR612 and VR613 so that the output level goes down a few dB level around 40MHz portion and minimum error rate as shown in Figure.

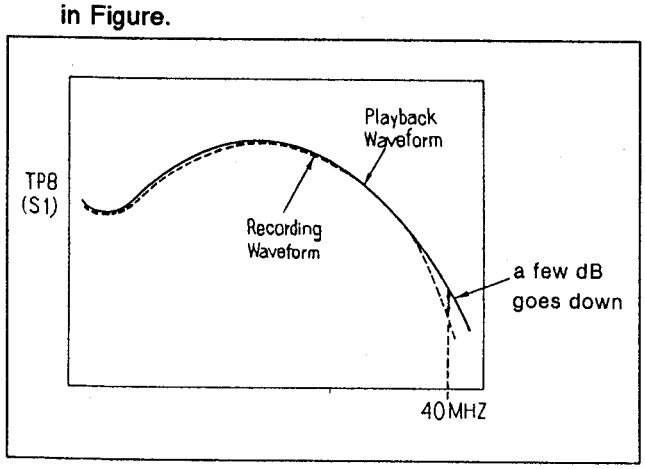

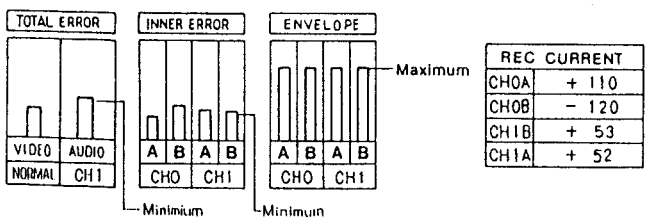

REC CURRENT	
CH0A	+ 110
CH0B	− 120
CH1B	+ 53
CH1A	+ 52

FINAL CONFIRMATION

SPEC	REFER TO FIGURE
TEST	TP8(S1,S2 BOARD), TP207(REC AMP BOARD) → EXT IN
MODE	REC mode
TAPE	SELF RECORDING TAPE
M.EQ	SPECTRUM ANALYZER, 50Ω PROBE WITH CLIP
INPUT	75% COLOR BAR SHUFFLING OFF ALIGNMENT TAPE
ADJ.	FRONT PANEL REC CURRENT (SP MENU) VR2, VR4, VR7, VR9

1. Set the spectrum analyzer as shown item 14-2.
2. Connect the spectrum analyzer to TP8.
3. Connect the EXT input of spectrum analyzer to TP207.
4. Place the unit in the recording mode and memories the frequency characteristics waveform to VIEW B of the spectrum analyzer.
5. Set the Rec current of front panel so that the output spectrum of 5MHz goes down to -5dB.
6. Confirm that the output spectrum as shown in figure.
7. If it is not, readjust the Rec current of front panel and VR2, VR4, VR7 and VR9.

   MIX point of Both Spectrum = 30MHz ± 3MHz

8. Confirm that the error rate is minimum and envelope is maximum at bar graph.

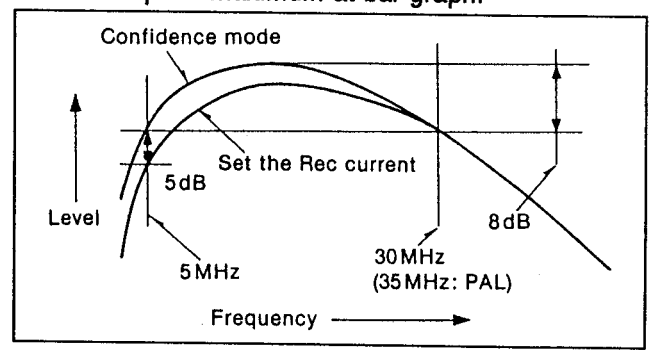

14-4. RF2 ENVELOPE DETECTION ADJUSTMENT

SPEC	MAX. ENVELOPE ON FRONT METER
TEST	FRONT METER OF TEST RF MENU
MODE	PLAY
TAPE	COLOR BAR SECTION OF ALIGNMENT TAPE
M.EQ	400MHz OSCILLOSCOPE
INPUT	
ADJ.	VR10[B3](CH1 OFF), VR12[B3](CH1 GAIN) VR5 [F1], VR11 [G1]

<STEP 1>
1. Set VR11 to center position.
2. SCOPE CH1 : TP1
   CH2 : TP207 for Trigger
3. Adjust VR5 so that the DC voltage is 1.5V ± 0.1V.

<STEP 2>
1. Turn the VR10 fully colockwise.
2. Playback the alignment tape color bar portion.
3. Set the tracking FIX mode.
   TEST → RF → TRACKING → FIX
4. Adjust VR12 so that the envelope meter shows 3.0 as shown in figure.
5. Set the tracking variable mode.
   TEST → RF → TRACKING → VAR
   Confirm the envelope meter value is changed when the front panel adjustment VR is turned.

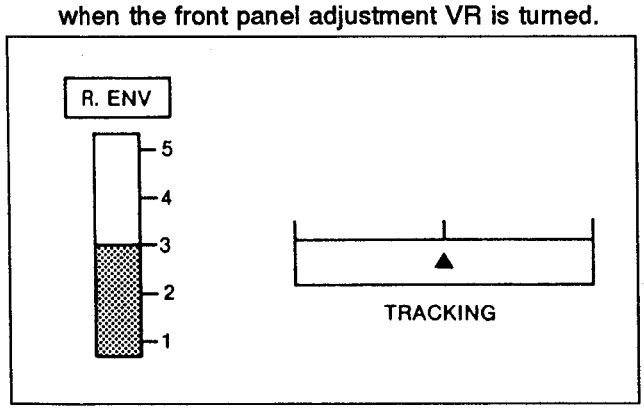

14-5. ROTARY ERASE ADJUSTMENT (REC AMP)

SPEC	REFER TO FIGURE
TEST	TP8 (S1 and S2)[E2], TP205[J5], TP206[K5],
MODE	AUDIO INSERT → VAR X 1
TAPE	BLANK TAPE
M.EQ	400MHz OSCILLOSCOPE
INPUT	75% COLOR BAR to VIDEO IN
ADJ.	VR202[O3], VR203[N1]

<STEP 1>
1. SCOPE CH2 : TP205
   CH3 : TP206
   CH4 : TP207
2. SCOPE TRIGGER : CH4
3. Disconnect the P504 and P511.
4. Set the "AUDIO INSERT" mode on MENU condition.
5. Place the unit in the Audio Insert mode. (PLAY → REC)
6. Adjust VR202 so that the DC voltage is 10 ± 0.5V DC as shown in Figure.
7. Adjust VR203 so that the DC voltage is 10 ± 0.5V DC as shown in Figure.

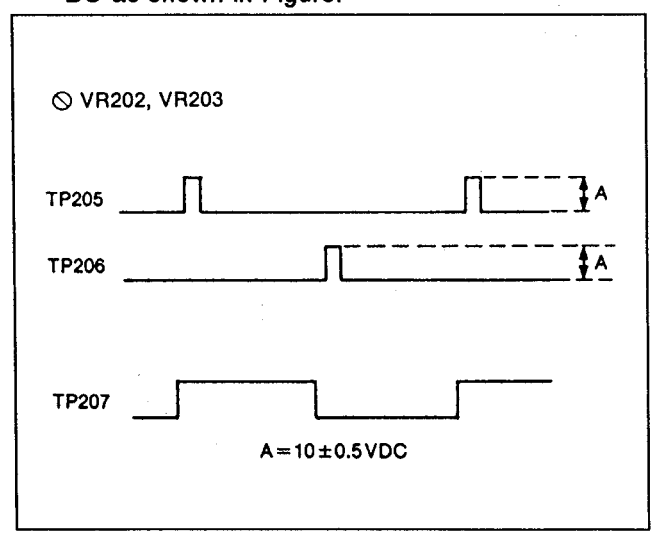

<STEP 2>
1. SCOPE CH1 : TP8/TPG5 (S1 board)
   CH4 : TP207
2. Playback an after adjustment recorded portion on VAR X 1 mode.
3. Confirm that the Audio Block of envelope is erased as shown in Figure.

<STEP 3>

1. SCOPE CH1 : TP8/TPG5 (S2 board)
   CH4 : TP207
2. Confirm that the envelope is within the above specification.
3. Re-connect the P504 and P511.

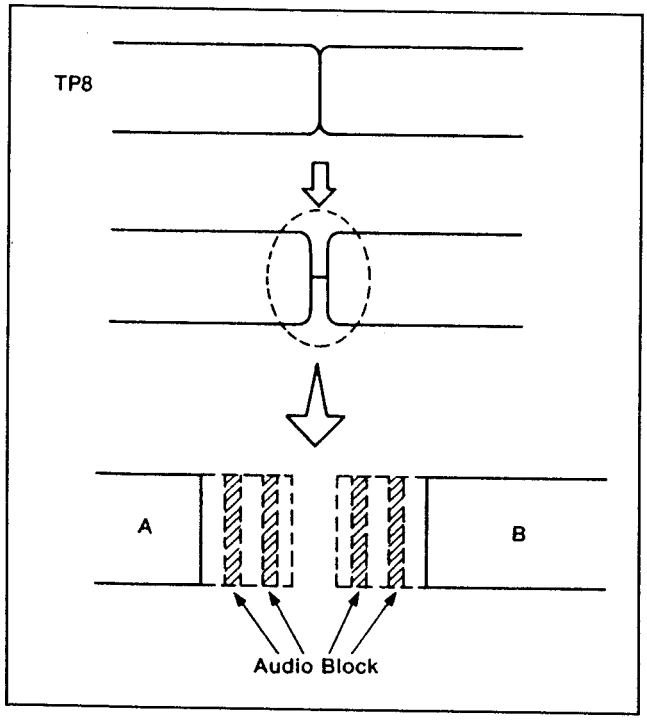

15. HEAD AMP REGULATOR BOARD

15-1. DC OUTPUT ADJUSTMENT (H.A REGURATOR)

SPEC	SV DC ± 0.1V DC
TEST	TP5
MODE	EJECT
TAPE	
M.EQ	OSCILLOSCOPE
INPUT	COLOR BAR
ADJ.	VR2

<STEP 1>
1. OSCILLOSCOPE : TP5
2. Adjust VR2 so that the adjust DC is 8V DC ± 0.1V DC.

15-2. WAVEFORM SHADER ADJUSTMENT (H.A REGURATOR)

SPEC	AS SHOWN FIGURE
TEST	TP2
MODE	EJECT
TAPE	
M.EQ	OSCILLOSCOPE
INPUT	COLOR BAR
ADJ.	VR1

<STEP 1>
1. OSCILLOSCOPE : TP2
2. Adjust VR1 so that the output waveform is as shown below.

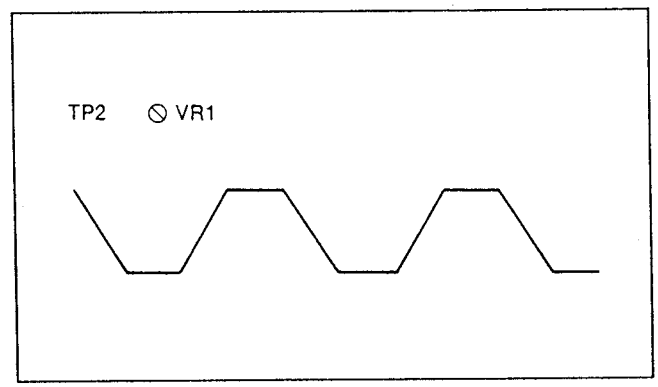

16. VIDEO/AUDIO REC (L2) BOARD

16-1. PLL (1) ADJUSTMENT

SPEC	AS SHOWN FIGURE
TEST	TP8602, TP8601
MODE	PITCH CONTROL ± 15%
TAPE	75% COLOR BAR PORTION ALIGNMENT TAPE
M.EQ	OSCILLOSCOPE
INPUT	
ADJ.	VR8601[B6]

<STEP 1>
1. SCOPE CH1 : TP8602 (TRIGGER)
   CH2 : TP8601
2. MENU CONDITION
   HOME MENU SET UP → PRPL ON
   Set the Program play to ± 15%
3. Confirm that the waveforms are locked as shown in figure.

<STEP 2>
1. If it is not, adjust VR8601 so that the waveform are locked.

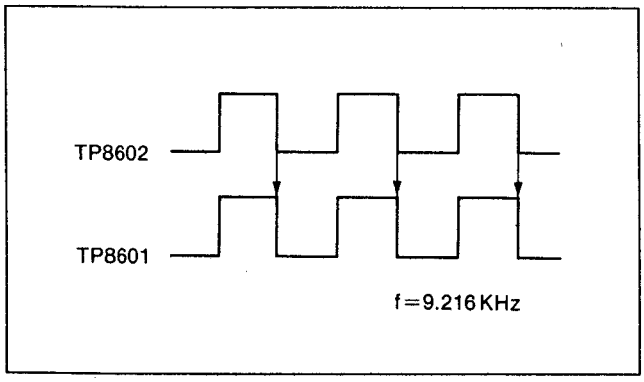

16-2. PLL (2) ADJUSTMENT

SPEC	AS SHOWN FIGURE
TEST	TP8605, TP8604
MODE	PITCH CONTROL ± 15%
TAPE	75% COLOR BAR PORTION ALIGNMENT TAPE
M.EQ	OSCILLOSCOPE
INPUT	
ADJ.	VR8602[D5]

<STEP 1>
1. SCOPE CH1 : TP8605 (TRIGGER)
   CH2 : TP8604
2. MENU CONDITION

   HOME MENU SET UP → PRPL ON
   Set the Program play to ± 15%
3. Confirm that the waveforms are locked as shown in figure.

<STEP 2>
1. If it is not, adjust VR8602 so that the waveform are locked.

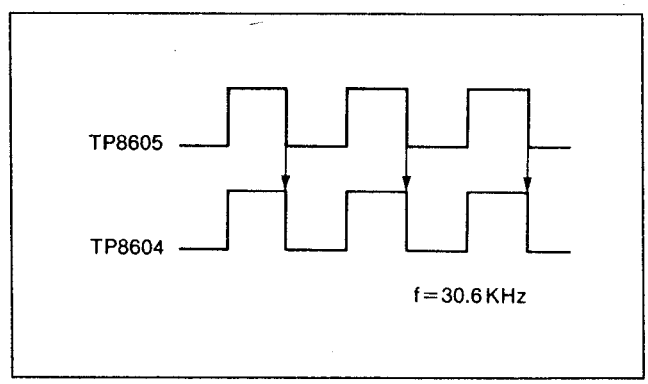

16-3. PLL (3) ADJUSTMENT

SPEC	AS SHOWN FIGURE
TEST	TP8608, TP8607
MODE	PITCH CONTROL ± 15%
TAPE	75% COLOR BAR PORTION ALIGNMENT TAPE
M.EQ	OSCILLOSCOPE
INPUT	
ADJ.	VR8603[D4]

<STEP 1>
1. SCOPE CH1 : TP8608 (TRIGGER)
   CH2 : TP8607
2. MENU CONDITION
   HOME MENU SET UP → PRPL ON
   Set the Program play to ± 15%
3. Confirm that the waveforms are locked as shown in figure.

<STEP 2>
1. If it is not, adjust VR8603 so that the waveform are locked.

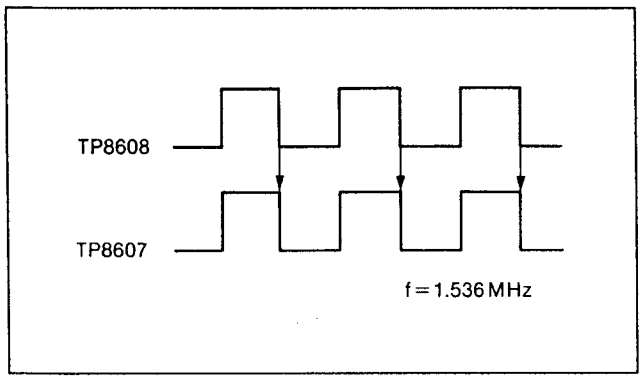

17. SYSTEM CONTROL (S7) BOARD

SPEC	2.00V ± 0.01V
TEST	TP1[B3]
MODE	EJECT
TAPE	
M.EQ	OSCILLOSCOPE
INPUT	
ADJ.	VR1[A4]

<STEP 1>
1. MENU CONDITION
   TEST → RF → REC CNT → (cursor center)
2. Memorize the REC current value and adjust the REC current value are +127 on the every channels.

<STEP 2>
1. SCOPE CH1 : TP1
2. Adjust VR1 so that the output level is 2.00V ± 0.01VDC.
3. Reset the REC current value to original position.

NTSC

ECTRUM ANALYZER SETUP (MODEL HP8591A)

1. SETUP --- REG 1

ITEM	PARAMETER
(1) REF LEVEL	0dBm
(2) ATTEN	10dB
(3) DIV (dB/DIV)	10dB/div
(4) CENTER FREQUENCY	27.5MHz
(5) FREQUENCY SPAN	10MHz
(6) RES BW	100kHz
(7) VIDEO BW	3kHz
(8) SWEEP TIME	300msec
(9) TRIGGER	EXT (HEAD SW)
(10) VID AVG	30

2. SETUP --- REG 2

ITEM	PARAMETER
(1) REF LEVEL	0dBm
(2) ATTEN	10dB
(3) DIV (dB/DIV)	10dB/div
(4) CENTER FREQUENCY	27.5MHz
(5) FREQUENCY SPAN	10MHz
(6) RES BW	100kHz
(7) VIDEO BW	3kHz
(8) SWEEP TIME	300msec
(9) TRIGGER	EXT (HEAD SW)
(10) VID AVG	30

3. SETUP --- REG 3

ITEM	PARAMETER
(1) REF LEVEL	0dBm
(2) ATTEN	10dB
(3) DIV (dB/DIV)	10dB/div
(4) START FREQUENCY	20MHz
(5) STOP FREQUENCY	0MHz
(6) RES BW	300kHz
(7) VIDEO BW	3kHz
(8) SWEEP TIMER	30msec
(9) TRIGGER	FREE RUM

4. SETUP --- REG 4

ITEM	PARAMETER
(1) REF LEVEL	-10dBm
(2) ATTEN	10dB
(3) DIV (dB/DIV)	5dB/div
(4) START FREQUENCY	0MHz
(5) STOP FRQUENCY	50MHz
(6) RES BW	1MHz
(7) VIDEO BW	3kHz
(8) SWEEP TIME	300msec
(9) TRIGGER	EXT (HEAD SW)
(10) VID AVG	10

5. SETUP --- REG 5

ITEM	PARAMETER
(1) REF LEVEL	-20dBm
(2) ATTEN	10dB
(3) DIV (dB/DIV)	5dB/div
(4) START FREQUENCY	0MHz
(5) STOP FREQUENCY	50MHz
(6) RES BW	1kHz
(7) VIDEO BW	3kHz
(8) SWEEP TIME	300msec
(9) TRIGGER	EXT (HEAD SW)

6. SETUP --- REG 6

ITEM	PARAMETER
(1) REF LEVEL	-15dBm
(2) ATTEN	10dB
(3) DIV (dB/DIV)	5dB/div
(4) START FREQUENCY	27.5MHz
(5) STOP FREQUENCY	0MHz
(6) RES BW	1MHz
(7) VIDEO BW	3kHz
(8) SWEEP TIME	200msec
(9) TRIGGER	EXT (HEAD SW)
(10)VID AVG	5

Electrical Adjustment

PAL

Panasonic
Broadcast Systems

PAL

ELECTRICAL ADJUSTMENT PROCEDURES

CONTENTS

RECOMMENDED TEST AND SERVICE EQUIPMENT 1

1. AUDIO A/D D/A, VIDEO D/A (L1) BOARD [AUDIO SECTION] 2

1-1. A/D REFERENCE LEVEL ADJUSTMENT 2
1-2. AUDIO OUTPUT LEVEL ADJUSTMENT 2

1. AUDIO A/D D/A, VIDEO D/A (L1) BOARD [VIDEO SECTION] 3

1-1. VIDEO OUTPUT LEVEL ADJUSTMENT 3
1-2. VIDEO OUTPUT FREQUENCY ADJUSTMENT (1) 3
1-3. VIDEO OUTPUT FREQUENCY ADJUSTMENT (2) 4
1-4. VIDEO OUTPUT DC LEVEL ADJUSTMENT 4
1-5. CHARACTER LEVEL ADJUSTMENT 5
1-6. WFM OUTPUT LEVEL ADJUSTMENT 5

4. VIDEO PROCESS (L4) BOARD 6

4-1. BF PULSE POSITION ADJUSTMENT 7
4-2. SH PULSE POSITION ADJUSTMENT 8
4-3. REF PLL ADJUSTMENT 8
4-4. REF CF DETECTION ADJUSTMENT (1) 9
4-5. REF SCH DETECTION ADJUSTMENT (1) 9
4-6. SCH METER ADJUSTMENT 10
4-7. REF CF DETECTION ADJUSTMENT (2) 11
4-8. REF SCH DETECTION ADJUSTMENT (2) 11
4-9. REF SCH DETECTION ADJUSTMENT (3) 12
4-10. SYS PLL ADJUSTMENT 13
4-11. BB OUT SYNC LEVEL ADJUSTMENT 13
4-12. BB OUT SC PHASE ADJUSTMENT 14
4-13. SYS SC PHASE ADJUSTMENT (2) 15
4-14. BB OUT SCH ADJUSTMENT 16
4-15. BB OUT H PHASE ADJUSTMENT (1) 16
4-16. BB OUT H PHASE ADJUSTMENT (2) 17
4-17. BB OUT BURST LEVEL ADJUSTMENT 17
4-18. BB OUT BURST POSITION & WIDTH ADJUSTMENT 18
4-19. SYSTEM H PHASE (OUT REF = INCOM) ADJUSTMENT (1) 18
4-20. SYSTEM H PHASE (OUT REF = INCOM) ADJUSTMENT (2) 19
4-21. SYSTEM H PHASE (OUT REF = INCOM) ADJUSTMENT (3) 19
4-22. DIGITAL VIDEO OUT CLOCK PHASE ADJUSTMENT 20

5. EQUALIZER (REC/PLAY) CH0 (S1) BOARD, EQUALIZER (REC/PLAY) CH1 (S2) BOARD 21

5-1. PLL ADJUSTMENT 23
5-2. ENVELOPE MAX ADJUSTMENT 26
5-3. AB DC BAL ADJUSTMENT 26
5-4. ENVELOPE DETECTION ADJUSTMENT 27
5-5. EQUALIZATION ADJUSTMENT (1) 28
5-6. EQUALIZATION ADJUSTMENT (2) 29
5-7. WFM OUT CONFIRMATION 30

7. CUE AUDIO (S3) BOARD 31

7-1. MASTER OSC DRIVE VOLTAGE ADJUSTMENT 31
7-2. MASTER OSC ADJUSTMENT 31
7-3. FULL ERASE CURRENT ADJUSTMENT 32
7-4. CUE ERASE CURRENT ADJUSTMENT 32
7-5. T/C ERASE CURRENT ADJUSTMENT 33
7-6. CTL ERASE CURRENT ADJUSTMENT 33
7-7. T/C BIAS & SIGNAL ADJUSTMENT 34
7-8. CUE BIAS CURRENT ADJUSTMENT (1) 34
7-9. EE LEVEL ADJUSTMENT 35
7-10. PLAYBACK EQUALIZER ADJUSTMENT 35
7-11. PLAYBACK LEVEL ADJUSTMENT 36
7-12. CUE BIAS CURRENT ADJUSTMENT (2) 36
7-13. REC EQUALIZER ADJUSTMENT 37
7-14. RECORDING LEVEL ADJUSTMENT 37
7-15. CUE METER ADJUSTMENT 38
7-16. CUE MIX ADJUSTMENT 38

8. AT (S4) BOARD 39

8-1. ENVELOPE DETECTION ADJUSTMENT 39
8-2. CONFIRMATION OF GROUP DELAY COMPENSATION CIRCUIT 40
8-3. D/A CONVERTER FULL SCALE ADJUSTMENT 40

PAL

8-4. D/A CONVERTER OFFSET ADJUSTMENT 41
8-5. OPEN GAIN ADJUSTMENT 41
8-6. DRIVE WAVEFORM CONFIRMATION 42
8-7. STRAIN SENSOR OUTPUT ADJUSTMENT (ACH) 42
8-8. STRAIN SENSOR OUTPUT ADJUSTMENT (BCH) 43
8-9. STRAIN SENSOR GAIN ADJUSTMENT 43
8-10. AT HEIGHT (1) ADJUSTMENT 44
8-11. AT HEIGHT (2) ADJUSTMENT 45
8-12. GAIN ADJUSTMENT 46
8-13. STRAIN LOOP FREQUENCY RESPONSE ADJUSTMENT 47
8-14. GROUP DELAY COMPENSATION ADJUSTMENT 48
8-15. NORMAL PLAY CONFIRMATION 48
8-16. CONFIDENCE PB CONFIRMATION 49
FINAL CONFIRMATION OF AT ADJUSTMENT 49

9. SERVO (S5) BOARD 51
9-1. CAPSTAN FG AMP ADJUSTMENT 51
9-2. TAKE UP REEL TORQUE ADJUSTMENT 51
9-3. SUPPLY RELL TORQUE ADJUSTMENT 52
9-4. SENSOR AMP OFFSET ADJUSTMENT 53
9-5. SUPPLY SENSOR VOLTAGE ADJUSTMENT 54
9-6. LOADING TORQUE ADJUSTMENT 55
9-7. CONFIRM THAT THE CAPSTAN ERROR MIX RATE VR 55
9-8. SUPPLY (FWD.) TENSION ADJUSTMENT 56
9-9. CTL REC CURRENT ADJUSTMENT 57
9-10. CONTROL PLAYBACK AMP OFFSET ADJUSTMENT 57
9-11. CTL PLAYBACK AMP GAIN ADJUSTMENT 58
9-12. CTL PLAYBACK AMP F/V GAIN ADJUSTMENT 58
9-13. CTL REC CURRENT ADJUSTMENT 59
9-14. PG SHIFTER ADJUSTMENT 59

10. TIME CODE SECTION 60
10-1. SUPER C CURRENT ADJUSTMENT 60
10-2. PB LTC LEVEL ADJUSTMENT 60

12. AUDIO PROCESS (S8) BOARD 61
12-1. DIGITAL AUDIO INTERFACE (1) ADJUSTMENT 61
12-2. DIGITAL AUDIO INTERFACE (2) ADJUSTMENT 61
12-3. CUE METER OFFSET ADJUSTMENT 62

13. VIDEO A/D PLL (S9) BOARD 63
13-1. INPUT PLL ADJUSTMENT 63
13-2. CF ADJUSTMENT 64
13-3. SCH ADJUSTMENT 64
13-4. INCOME CF DETECTION ADJUSTMENT (1) 65
13-5. SCH METER ADJUSTMENT 66
13-6. INPUT SCH DETECTION ADJUSTMENT 67
13-7. INCOME CF DETECTION ADJUSTMENT (3) 68
13-8. VIDEO PHASE ADJUSTMENT 69
13-9. VIDEO INPUT CLAMP ADJUSTMENT 70
13-10. VIDEO INPUT LEVEL ADJUSTMENT 71
13-11. VIDEO INPUT FREQUENCY ADJUSTMENT (1) 71
13-12. VIDEO INPUT FREQUENCY ADJUSTMENT (2) 71
13-13. INPUT LEVEL METER ADJUSTMENT 72

14. REC AMP BOARD 73
14-1-(1). REC 2nd HARMONICS DISTORTION ADJUSTMENT (1) 73
14-1-(2). REC 2nd HARMONICS DISTORTION ADJUSTMENT (2) 74
14-2. REC CURRENT and REC EQUALIZER ADJUSTMENT (CH0) 75
14-3. REC CURRENT and REC EQUALIZER ADJUSTMENT (2) 77
14-4. RF2 ENVELOPE DETECTION ADJUSTMENT 80
14-5. ROTARY ERASE ADJUSTMENT 81

15. HEAD AMP REGULATOR BOARD 82
15-1. DC OUT ADJUSTMENT 82
15-2. WAVEFORM SHADER ADJUSTMENT 82

16. VIDEO/AUDIO REC (L2) BOARD 83
16-1. PLL (1) ADJUSTMENT 83
16-2. PLL (2) ADJUSTMENT 83
16-3. PLL (3) ADJUSTMENT 84

17. SYSTEM CONTROL (S7) BOARD 84

SPECTRUM ANALIZER SETUP 85

RECOMMEND TEST AND SERVICE EQUIPMENT

PART No.	NAME	REMARK
TSG273	DIGITAL COMPOSITE SIGNAL GENERATOR	TEKTRONIX
1411	COMPOSITE SIGNAL GENERATOR	TEKTRONIX
2467B	400MHz OSCILLOSCOPE	TEKTRONIX
1751	SCH METER	TEKTRONIX
521A	VECTOR SCOPE	TEKTRONIX
	DIGITAL VOLT METER	
	FREQUENCY COUNTER	
	VTVM	FREQUENCY BAND WIDTH 4Hz ~ 500KHz
	DIGITAL MULTI METER	
	DISTORTION METER	
HP8591A	SPECTRUM ANALYZER	HEWLETT PACKARD
	AUDIO ANALYZER (or RC OSCILLATOR)	
TYPE 5012	DIGITAL AUDIO SIGNAL GENERATOR	PRO-BEL

How to read a table for adjustment.

TEST	Test points for scope and [Location on the Board]
MODE	Set VTR this mode
TAPE	Alignment Tape portion or work tape
M.EQ	Measurement Equipment
INPUT	Input the signal to VTR specified here
ADJ.	Adjustment portion and [Location on the Board]

PAL

1.AUDIO A/D D/A, VIDEO D/A (L1) BOARD [AUDIO SECTION]

1-1.A/D REFERENCE LEVEL ADJUSTMENT

SPEC	0dBm ± 0.05dB
TEST	TP302 (CH1)[C2], TP305 (CH2)[C3], TP312 (CH3)[C5], TP315 (CH4)[C7]
MODE	EJECT, EE2
TAPE	
M.EQ	VTVM
INPUT	1kHz 0dBm Sinewave Signal to AUDIO IN (CH1 to CH4)
ADJ.	VR301 (CH1)[B2], VR302 (CH2)[B3], VR304 (CH4)[B7]

4000 SERIES
<STEP 1>
MACHINE CONDITION
1.INPUT ATT SELECT SW 0dBm
(on the AUDIO IN/OUT Board)
2.OUTPUT ATT SELECT SW 0dBm
(on the AUDIO IN/OUT Board)
3.INPUT IMPEDANCE SW ..... HIGH
(on the AUDIO IN/OUT Board)

<STEP 2>
MENU CONDITION
AUDIO IN MENU
Select the AUDIO INPUT LEVEL to "UNITY"

(CH1 ~ CH4 : F1 ~ F4)

<STEP 3>
1.VTVM:LINE OUT (CH1)
LINE OUT (CH2)
LINE OUT (CH3)
LINE OUT (CH4)
2.Adjustment VR:VR301 (CH1)
VR302 (CH2)
VR303 (CH3)
VR304 (CH4)
SPECIFICATION:
VR301, VR302:0dBm ± 0.05dB
VR304, VR303

<STEP 4>
1.VTVM:TP301 (CH1)
TP302 (CH2)
TP303 (CH3)
TP304 (CH4)
2.Confirm that the Audio level is within the specification as shown.
SPECIFICATION :+9.30dBm ± 0.5dB

<STEP 5>
1.VTVM:TP303 (CH1)
TP306 (CH2)
TP313 (CH3)
TP316 (CH4)
2.Confirm that the Audio level is within the specification as shown.
SPECIFICATION:-9.7dBm ± 0.2dB

1-2.AUDIO OUTPUT LEVEL ADJUSTMENT

SPEC	0dBm ± 0.2dB
TEST	LINE OUT : (CH1), (CH2), (CH3), (CH4) (MONI LCH), (MONI RCH)
MODE	EJECT, EE2
TAPE	
M.EQ	VTVM
INPUT	1kHz 0dBm Sinewave Signal to AUDIO IN (CH1 to CH4)
ADJ.	VR601 (CH1)[F2], VR602 (CH2)[G2], VR603 (CH3)[I2], VR604 (CH4)[J2], VR605 (MONI LCH)[K2], VR606 (MONI RCH)[M2]

<STEP 1>
MENU CONDITION
AUDIO IN MENU
Select the AUDIO INPUT
LEVEL to "OFF" : F7 (EMPHASIS)

<STEP 2>
1. VTVM : CH1 LINE OUT
CH2 LINE OUT
CH3 LINE OUT
CH4 LINE OUT
MONI LCH OUT
MONI RCH OUT

2. Adjustment VR : VR601 (CH1)
VR602 (CH2)
VR603 (CH3)
VR604 (CH4)
VR605 (MONI LCH)
VR606 (MONI RCH)

(SPECIFICATION)
Each CH Output Level : +0dBm ± 0.5dB

Note: If there is some noise at monitor out, please adjust L601 ~ L606, L201.

1. AUDIO A/D D/A, VIDEO D/A (L1) BOARD [VIDEO SECTION]

MENU CONDITION
AUDIO IN MENU
Select the VIDEO INPUT F3 to "DIGITAL"

VIDEO OUT SET UP MENU
Select the VIDEO STANBY OFF to "EE2"
STANBY OFF
VIDEO : EE2

1-1. VIDEO OUTPUT LEVEL ADJUSTMENT (L1 : VIDEO D/A)

SPEC	1V ± 0.002Vpp
TEST	VIDEO 1 OUT, VIDEO 2 OUT, VIDEO 3 OUT
MODE	EE2 (EJECT)
TAPE	
M.EQ	SCH METER (WFM MODE)
INPUT	PULSE & BAR to DIGITAL IN
ADJ.	VR1 (D/A LEVEL)[A8]

<STEP 1>
1. SCH METER : VIDEO 1 OUT
2. Adjust VR1 so that the Video level "A" is 1V ± 0.002Vp-p as shown in Figure.

<STEP 2>
1. SCH METER : VIDEO 2 OUT
   VIDEO 3 OUT
2. Confirm that the Video level "A" is 1V ± 0.002Vp-p.

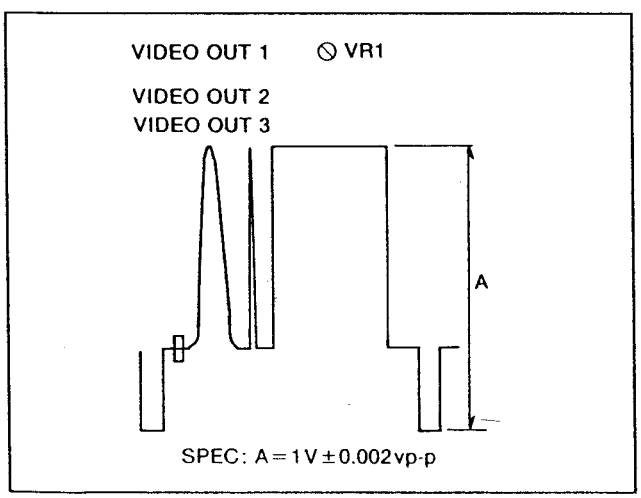

1-2. VIDEO OUTPUT FREQUENCY ADJUSTMENT (1) (L1 : VIDEO D/A)

SPEC	LITPLE
TEST	VIDEO 1 OUT, VIDEO 2 OUT, VIDEO 3 OUT
MODE	EE2 (EJECT)
TAPE	
M.EQ	SCH METER (WFM MODE)
INPUT	DIGITAL H SWEEP to DIGITAL IN
ADJ.	VR2 [L8]

<STEP 1>
1. SCH METER : VIDEO 1 OUT
2. Adjust VR2 so that the Frequency Response is flat as shown in Figure.

<STEP 2>
1. SCH METER : VIDEO 2 OUT
   VIDEO 3 OUT
2. Confirm that the Frequency Response is flat as shown in Figure.

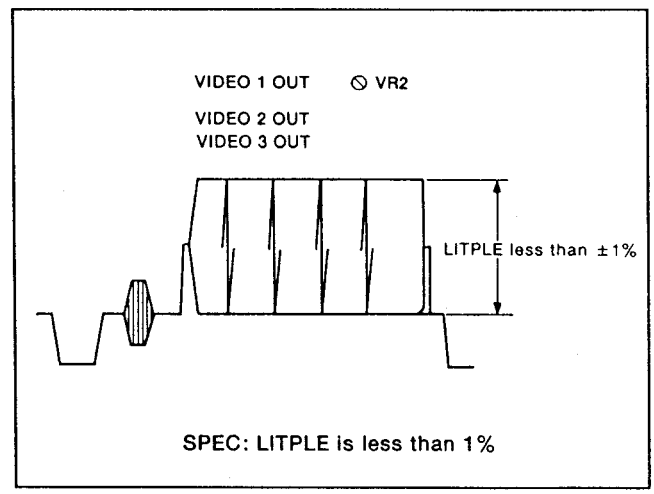

PAL

1-3. VIDEO OUTPUT FREQUENCY ADJUSTMENT (2) (L1 : VIDEO D/A)

SPEC	CENTER OF THE SCALE
TEST	VIDEO 1 OUT
MODE	EE2 (EJECT)
TAPE	
M.EQ	VECTOR SCOPE
INPUT	DIGITAL COLOR BAR to DIGITAL IN
ADJ.	VR2 [L8]

<STEP 1>
1. VECTOR SCOPE : VIDEO 1 OUT
2. Adjust VR2 so that the each vector is in center the scale of Vector Scope.

<STEP 2>
1. Confirm that the each vector position is in the box of vector when put back the LI board into the VTR.

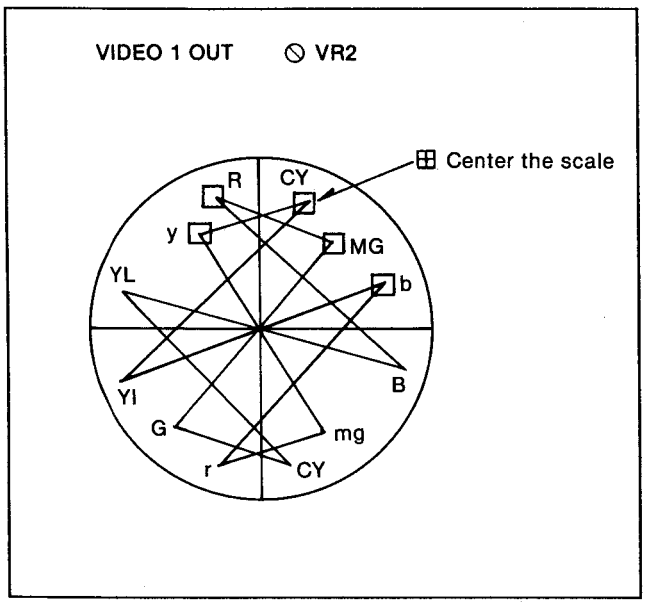

1-4. VIDEO OUTPUT DC LEVEL ADJUSTMENT (L1 : VIDEO D/A)

SPEC	0V ± 20mV
TEST	TP4 [J8]
MODE	EE2 (EJECT)
TAPE	
M.EQ	OSCILLOSCOPE
INPUT	DIGITAL COLOR BAR to DIGITAL IN
ADJ.	VR4 (CLAMP DC LEV)[L7]

<STEP 1>
MACHINE CONDITION
Connect the 75Ω termination to VIDEO 1 OUT.

<STEP 2>
1. SCOPE : TP4
2. Adjust VR4 so that the Pedestal DC level is 0V ± 20mV as shown in Figure.

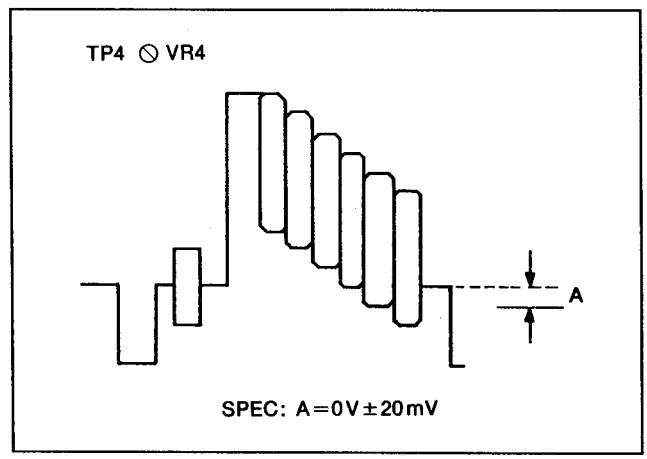

1-5. CHARACTER LEVEL ADJUSTMENT (L1 : VIDEO D/A)

SPEC	560mV ± 35mV
TEST	VIDEO 3 OUT (SUPER)
MODE	EE2 (EJECT)
TAPE	
M.EQ	SCH METER (WFM MODE)
INPUT	DIGITAL COLOR BAR to DIGITAL IN
ADJ.	VR6 (CHAR LEVEL)[J8]

<STEP 1>
1. SCH METER : VIDEO 3 OUT
2. Adjust VR6 so that the Character level "A" is 80IRE ± 5IRE as shown in Figure. NTSC=571mV ± 35mV.

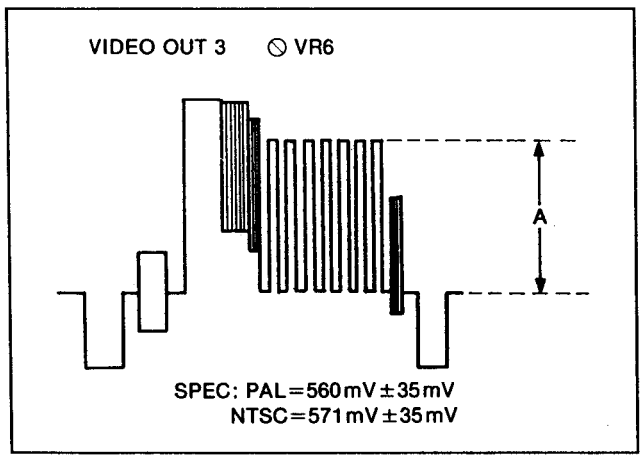

1-6. WFM OUTPUT LEVEL ADJUSTMENT (L1 : VIDEO D/A)

SPEC	1V ± 0.002Vpp
TEST	WFM OUTPUT
MODE	EE2 (EJECT)
TAPE	
M.EQ	SCH METER (WFM MODE)
INPUT	DIGITAL COLOR BAR to DIGITAL IN
ADJ.	VR5 (RET V LEVEL)[L6]

<STEP 1>
MENU CONDITION
VIDEO OUT MENU : F9
Select the WFM to A.INPUT

<STEP 2>
1. SCH METER : WFM OUTPUT
2. Adjust VR5 so that Input level "A" is 1V ± 0.002Vp-p as shown in Figure.

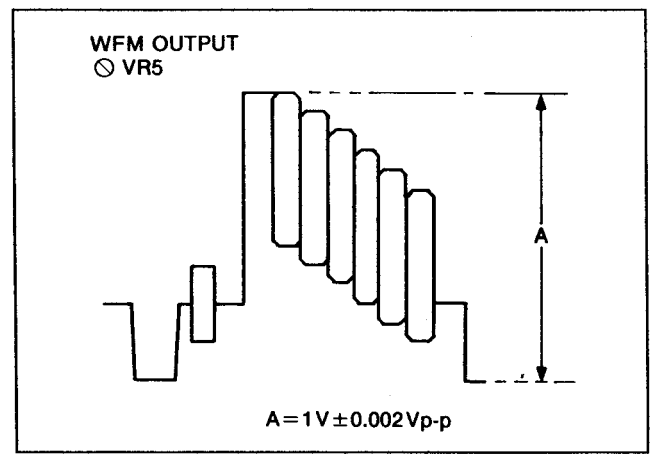

<STEP 3>
MENU CONDITION
VIDEO OUT MENU : F9
Select the WFM to "OUTPUT"

<STEP 4>
1. SCH METER :WFM OUTPUT
2. Confirm that the Output level "A" is 1V ± 0.002Vp-p as shown in Figure.

Refer to above Figure in <STEP 2>

4. VIDEO PROCESS (L4) BOARD

Adjustment with this section, perform after completed adjustment with L1 section.
MENU CONDITION 1
AUDIO IN MENU
Select the VIDEO INPUT F3 to "ANALOG"
VIDEO OUT SET UP MENU
Select the VIDEO STANBY OFF to "EE2"
STANBY OFF
VIDEO : EE2
MENU CONDITION 2
TEST MENU
VIDEO FUNCTION
Press the SCH F10 Key on the Front Panel and display the OUT REF SCH METER.

MACHINE CONDITION (SET UP CONDITION 1)

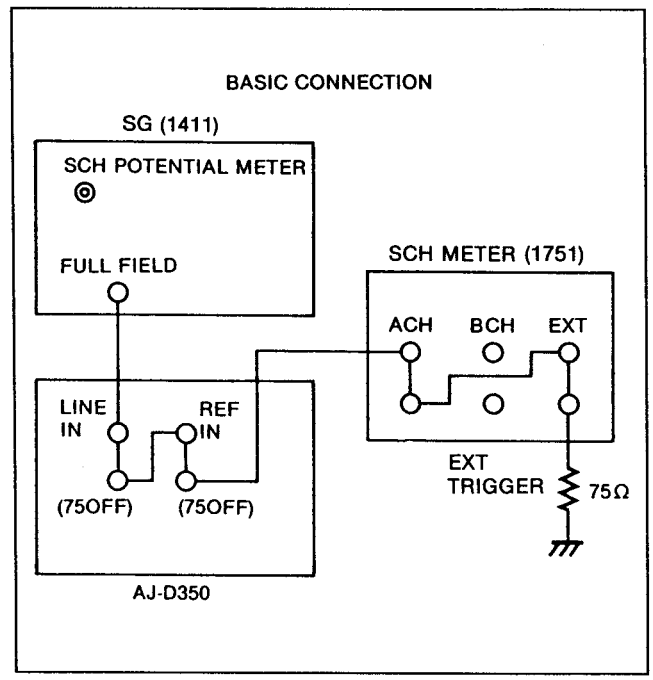

ADJUSTMENT SECTION
4-7. SCH METER ADJUSTMENT
4-9. REF CF DETECTION (3) ADJUSTMENT
4-6. REF SCH ADJUSTMENT

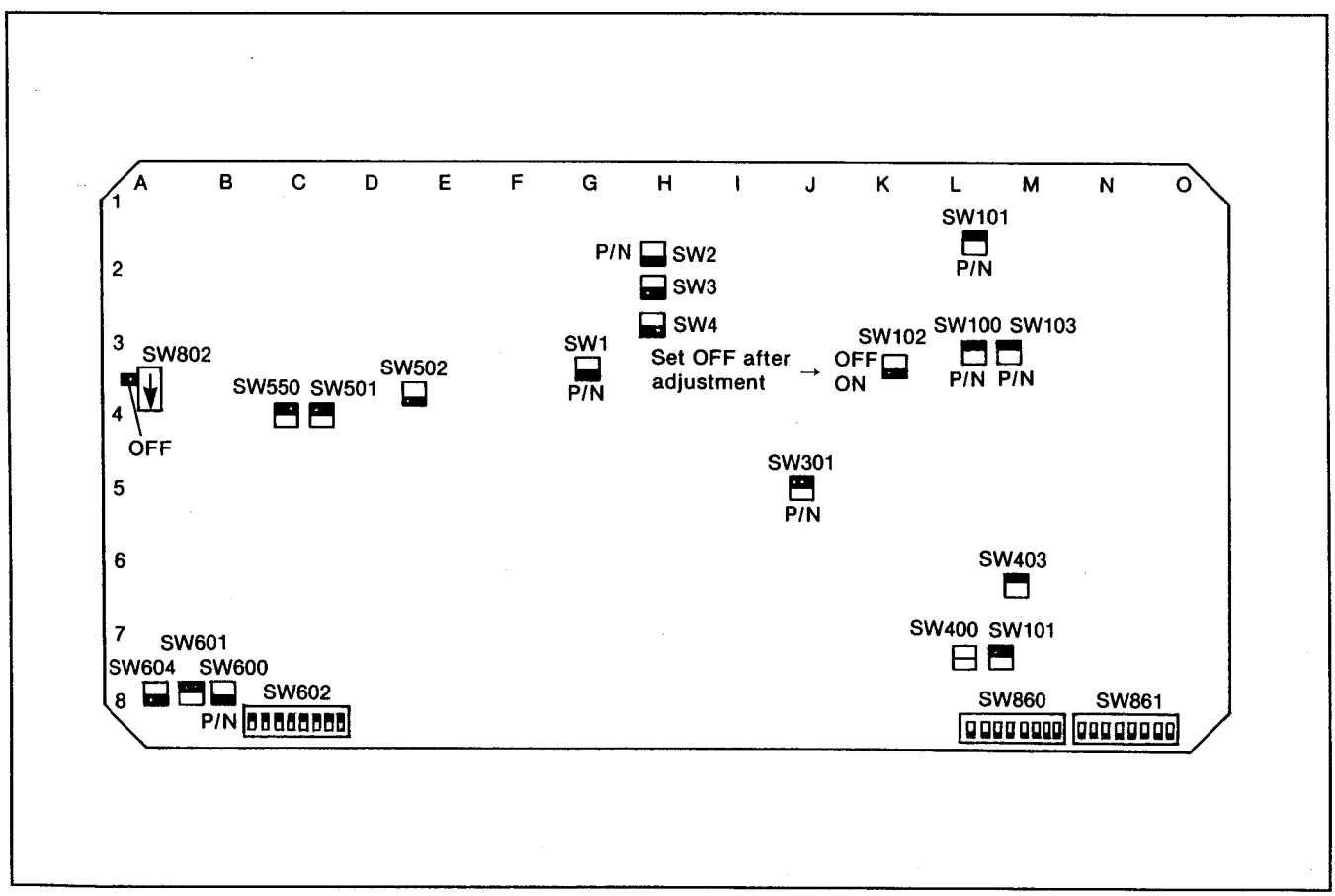

SWITCH POSITION IS BLACK SIDE

MACHINE CONDITION (SET UP CONDITION 2)

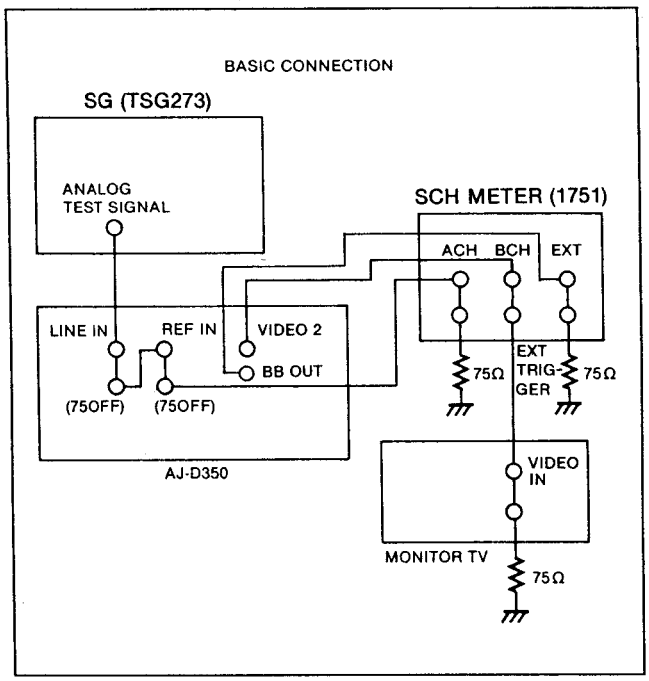

ADJUSTMENT SECTION
4-11. SYS SC PHASE ADJUSTMENT
4-12. SYS SC PHASE (2) ADJUSTMENT

MACHINE CONDITION (SET UP CONDITION 3)

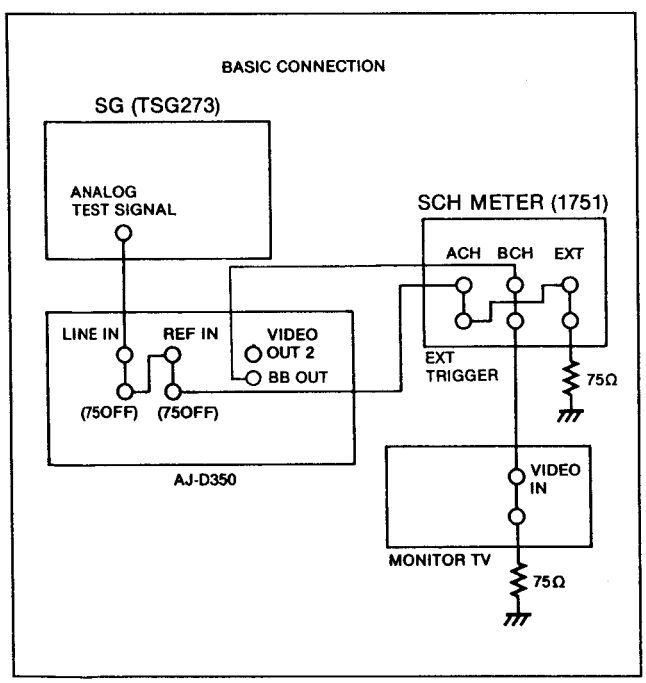

ADJUSTMENT SECTION
4-13. BB OUT SYNC LEVEL ADJUSTMENT
4-14. BB OUT SC PHASE ADJUSTMENT
4-15. BB OUT SCH ADJUSTMENT
4-16. BB OUT H PHASE (1) ADJUSTMENT
4-17. BB PIT H PHASE (2) ADJUSTMENT
4-18. BB OUT BURST LEVEL ADJUSTMENT
4-19. BB OUT BURST POSITION & WIDTH ADJUSTMENT

4-1. BF PULSE POSITION ADJUSTMENT (L4 : VIDEO PROCESS)

SPEC	BURST IS CENTER OF BF PULSE
TEST	TP9[I1], TP1[I3], TP3[G3]
MODE	EE2 (EJECT)
TAPE	
M.EQ	OSCILLOSCOPE
INPUT	70% COLOR BAR to VIDEO IN and REF VIDEO IN
ADJ.	VR1 (BF POS)[F3]

8000 SERIES

<STEP 1>
1. SCOPE : TP9
2. Confirm that the DC voltage is 2.25 ± 0.1V DC

<STEP 2>
1. SCOPE CH1 : TP1
   CH2 : TP3
2. Adjust VR1 so that the BF pulse is centered on the burst signal as shown in Figure.

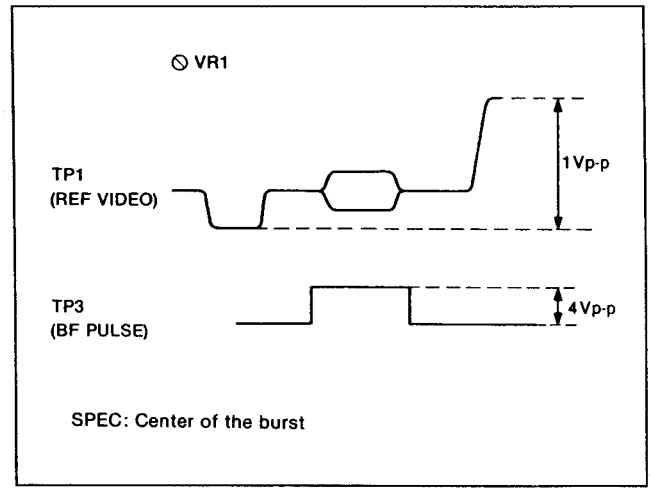

4-2. SH PULSE POSITION ADJUSTMENT (L4 : VIDEO PROCESS)

SPEC	SH PULSE IS CONTER OF BURST
TEST	TP1[I3], TP4[G3]
MODE	EE2 (EJECT)
TAPE	
M.EQ	OSCILLOSCOPE
INPUT	ANALOG 75% COLOR BAR to VIDEO IN and REF VIDEO IN
ADJ.	VR2 (SH POS)[F3]

<STEP 1>

1. SCOPE CH1 : TP1
   CH2 : TP4
2. Adjust VR2 so that the SH pulse is located at center of the burst signal as shown in Figure.

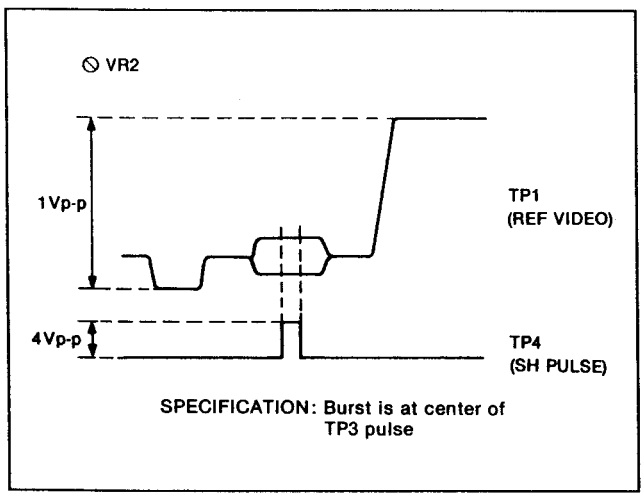

4-3. REF PLL ADJUSTMENT (L4 : VIDEO PROCESS)

SPEC	0V ± 0.1V DC
TEST	TP6 [I2]
MODE	EE2 (EJECT)
TAPE	
M.EQ	OSCILLOSCOPE
INPUT	ANALOG COLOR BAR to VIDEO IN and REF VIDEO IN
ADJ.	C95 (REF CLK FREQ)[I1]

8000 SERIES

<STEP 1>

1. SCOPE CH1 : TP6
2. Adjust C95 so that the DC voltage is 0 ± 0.1V DC.

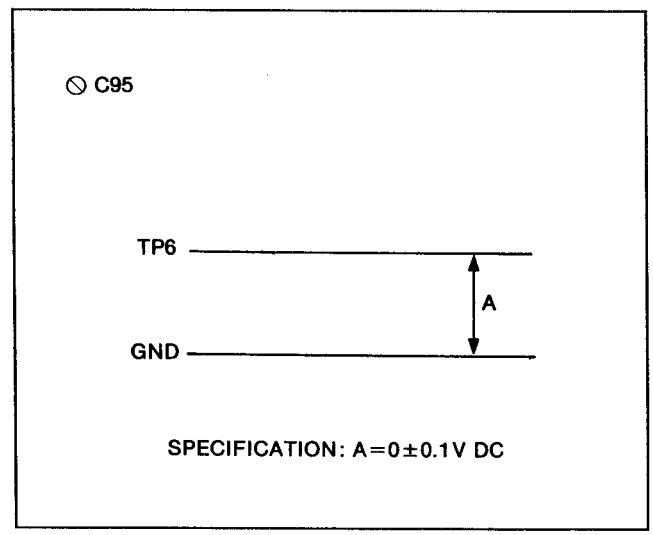

4-4. REF CF DETECTION ADJUSTMENT (1) (L4 : VIDEO PROCESS)

TEST	TP1 [I3]
MODE	EE2 (EJECT)
TAPE	
M.EQ	OSCILLOSCOPE
INPUT	TSG273 FLAT FIELD to VIDEO IN and REF VIDEO IN
ADJ.	VR100 (SCH DET 1)[L1], VR101 (SCH DET 2)[M1], VR102 (LEVEL DET)[L2]

8000 SERIES

<STEP 1>

1. Confirm that the jumper SW102 is set to ON side.
2. SCOPE CH1 : TP1
   CH2 : TP5
3. Set the VR100 and VR102 to center position.
4. Adjust VR101 so that the CF Pulse rise on head portion of color frame.

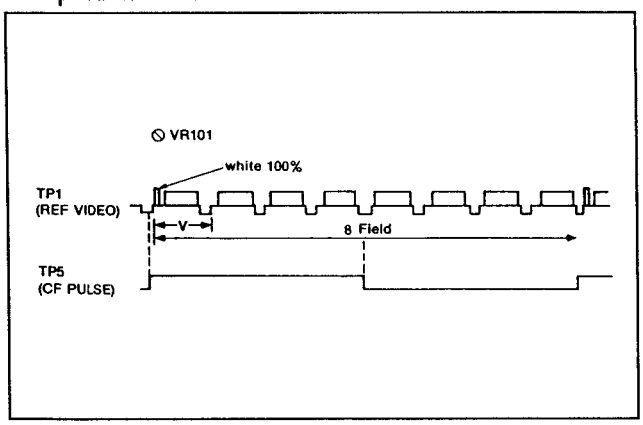

4-5. REF SCH DETECTION ADJUSTMENT (1) (L4 : VIDEO PROCESS)

TEST	TP5 [H2], TP103 [M3]
MODE	EE2 (EJECT)
TAPE	
M.EQ	OSCILLOSCOPE
INPUT	TSG273 75% COLOR BAR to VIDEO IN and REF VIDEO IN
ADJ.	VR101 (SCH DET 2)[M1], VR100 (SCH DET 1)[L1]

8000 SERIES

<STEP 1>

1. SCOPE CH1 : TP103
   CH2 : TP5
2. Confirm that pulse signal of TP103 level is changed, when turn VR101 to clockwise ot counter-clockwise.
3. Adjustment VR101 so that the pulse at TP103 is centered level between minimum (0V) and maximum (2 ~ 3V).

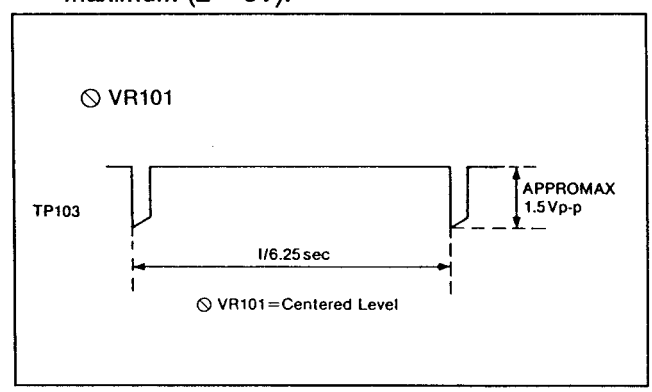

4. If VR101 is rotated too much, pulse position may be appeared at center of the pulses and color frame phase may be inverted.
5. Adjust VR100 so that the center between left and right side position which keep about 1.5V as shown in figure.

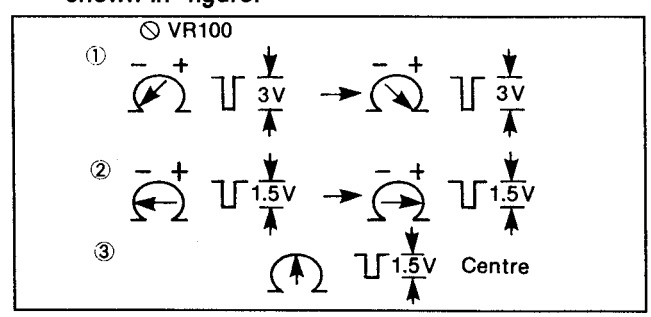

PAL

4-6. SCH METER ADJUSTMENT (L4 : VIDEO PROCESS)

SPEC	SCH METER DISPLAYED +45°
TEST	OUT REF SCH METER on TEST VIDEO MENU
MODE	EE2 (EJECT)
TAPE	
M.EQ	SCH METER
INPUT	1411 75% COLOR BAR to VIDEO IN and REF IN
ADJ.	VR105 (SCH GAIN)[K4], VR106 (SCH OFFSET)[K4]

8000 SERIES

<STEP 1>
MACHINE CONDITION
Refer to figure shown below.

<STEP 2>
1. Set VR105, VR106 to center position.
2. SCH METER : SCH MODE
3. Adjust the Potention Meter VR on 1411 so that the SCH phase becomes +45° at SCH METER.(Page 6)
4. Display the OUT REF SCH METER as follows.

   TEST → F1 VIDEO → F10 SCH

5. Adjust VR106 so that the OUT REF SCH METER displayed +45°.

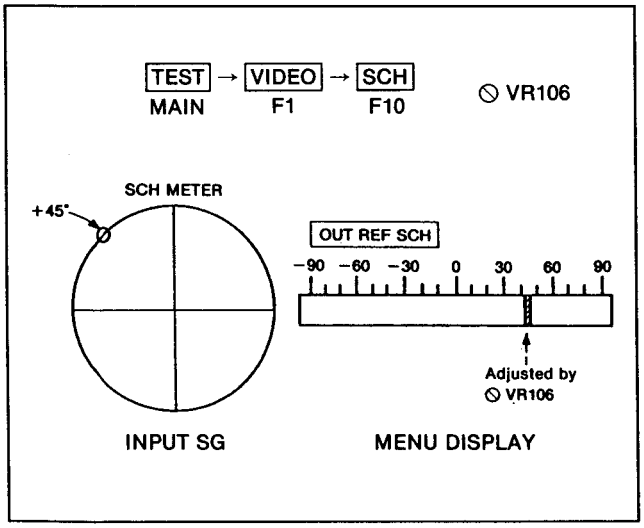

<STEP 3>
1. Adjust the Potention Meter VR on 1411 so that the SCH phase becomes -45° at SCH METER.
2. Display the OUT REF SCH METER VR follows.

   TEST → F1 VIDEO → F10 SCH

3. Adjust VR105 so that the OUT REF SCH METER displayed -45°.

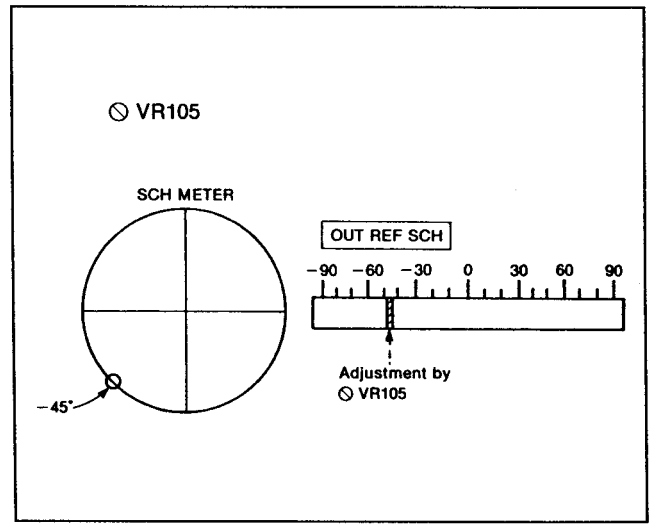

<STEP 4>
1. Re-adjust above <STEP 2> and <STEP 3> until stabilize the position of VR105 and VR106.

4-7. REF CF DETECTION ADJUSTMENT (2)

SPEC	SHOWN BELOW
TEST	OUT REF SCH Meter on TEST VIDEO Menu
MODE	EE2 (EJECT)
TAPE	
M.EQ	
INPUT	1411 75% COLOR BAR to VIDEO IN and REF IN
ADJ.	VR101 (SCH DET 2) [M1]

<STEP 1>
MACHINE CONDITION
Refer to SET UP CONDITION 1

<STEP 2>
1. Adjust the Potention Meter VR on 1411 so that the OUT SCH is displayed -90°.
2. Precisely adjust VR101 so that the OUT SCH displayed +90°, -90° inversely.

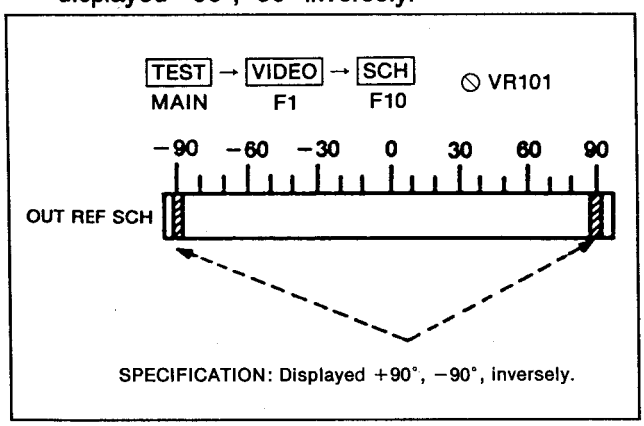

4-8. REF SCH DETECTION ADJUSTMENT (2) (L4 : VIDEO PROCESS)

SPEC	TP105 = TP104 ± 20mV
TEST	TP104[L3], TP105[J3], TP106[J3]
MODE	EE2 (EJECT), SW102 [K3] ON (DOWN)
TAPE	
M.EQ	SCH METER (OSCILLOSCOPE)
INPUT	1410 75% COLOR BAR to VIDEO IN and REF IN
ADJ.	VR103 (SCH -L)[J2], VR104 (SCH -H)[J2]

8000 SERIES

<STEP 1>
MACHINE CONDITION
Refer to SET UP Condition 1 at the beginning of this SECTION.(Page 6)

<STEP 2>
1. SCH METER : SCH MODE
2. Adjust the Potention Meter VR on 1411 so that the SCH phase becomes +70° at SCH METER.
3. SCOPE CH1 : TP106
   CH2 : TP104
4. Measure the voltage at TP104.
5. Adjust VR104 so that the DC voltage at TP106 is TP104 ± 20mV.

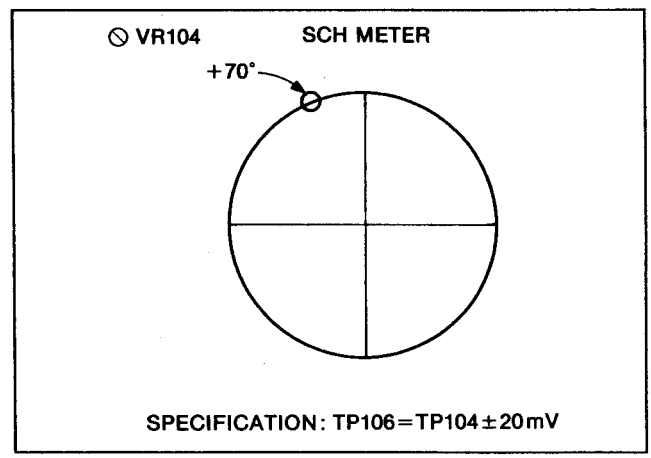

<STEP 3>
1. Adjustment the Potention Meter VR on 1411 so that the SCH phase becomes -70° at SCH METER.
3. SCOPE CH1 : TP105
   CH2 : TP104
4. Measure the voltage at TP104.
5. Adjust VR103 so that the DC voltage at TP105 is TP104 ± 20mV.

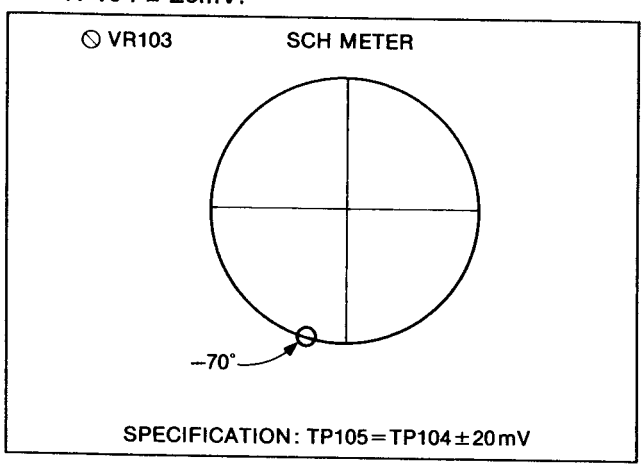

<STEP 4>
1. Set SW102 to OFF (UP).

4-9. REF SCH DETECTION ADJUSTMENT (3) (L4 : VIDEO PROCESS)

SPEC	SCH METER IS 0°
TEST	OUT REF SCH METER on TEST VIDEO MENU
MODE	EE2 (EJECT)
TAPE	
M.EQ	
INPUT	ANALOG 75% COLOR BAR to VIDEO IN and REF IN, SCH = 0°
ADJ.	VR101 (SCH DET 2)[M2]

8000 SERIES

<STEP 1>
MACHINE CONDITION
Refer to SET UP Condition 1 at the beginning of this SECTION.

<STEP 2>
1. Confirm the test signal generator output SCH is 0°.
2. Turn the power OFF and ON.
3. Display the OUT REF SCH METER on TEST VIDEO MENU.
4. Adjust VR101 so that the OUT REF SCH METER displayed 0°.

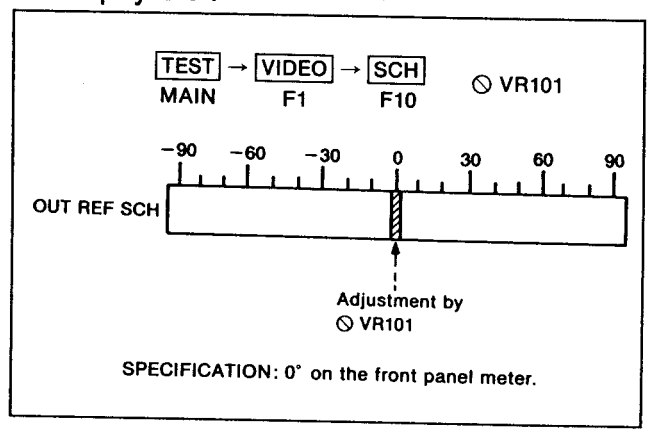

4-10. SYS PLL ADJUSTMENT (L4 : VIDEO PROCESS)

SPEC	TP108 = 2.5V ± 50mV DC
TEST	TP108[K2]
MODE	EE2 (EJECT)
TAPE	
M.EQ	OSCILLOSCOPE
INPUT	ANALOG 75% COLOR BAR to VIDEO IN and REF IN
ADJ.	VR108[K2]

8000 SERIES

<STEP 1>
MACHINE CONDITION
Refer to SET UP Condition 1 at the beginning of this SECTION.

<STEP 2>
1. SCOPE : TP108
2. Adjust VR108 so that the DC voltage is 2.5V ± 0.005V DC.
   SPECIFICATION : 2.5V ± 0.005V DC

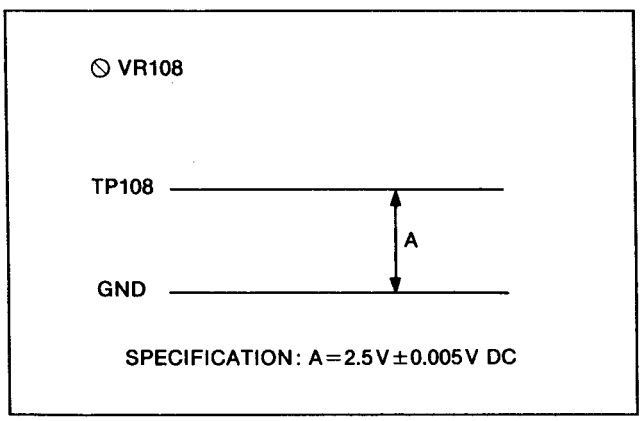

4-11. BB OUT SYNC LEVEL ADJUSTMENT (L4 : VIDEO PROCESS)

SPEC	SYNC = 300mVpp (VR202) MINIMUM CARRIER LEAKAGE (VR203)
TEST	BB OUT
MODE	EE2 (EJECT)
TAPE	
M.EQ	SCH METER (WFM MODE)
INPUT	ANALOG 75% COLOR BAR to VIDEO IN and REF IN
ADJ.	VR202 (BB SYNC GAIN)[O3], VR203 (BB C LEVEL)[N1]

8000 SERIES

<STEP 1>
MACHINE CONDITION
Refer to SET UP Condition 3 at the beginning of this SECTION.(Page 7)

<STEP 2>
1. SCH METER : WFM mode
2. SCH METER INPUT : CHA : SG.VIDEO
   CHB : BB OUT
3. Adjust VR202 so that the Sync level of BB is 300mV as shown in Figure.
   Confirm the sync level is same with CHA (SG Video sync level).
4. Adjust VR203 so that the carrier leak is become minimum.

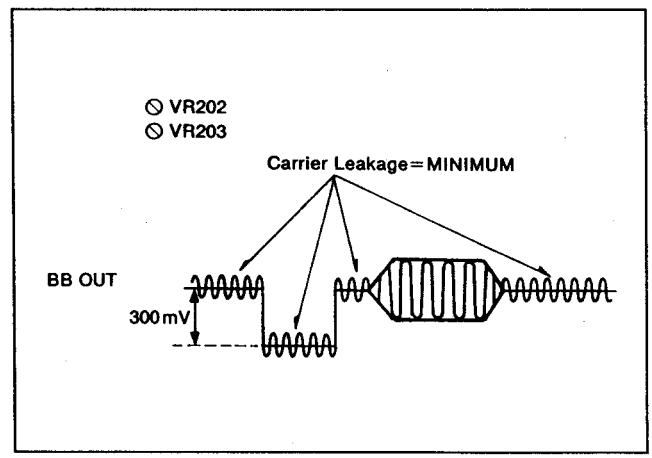

4-12. BB OUT SC PHASE ADJUSTMENT (L4 : VIDEO PROCESS)

TEST	REF VIDEO BB OUT
MODE	EE2 (EJECT)
TAPE	
M.EQ	SCH METER (WFM, SCH MODE)
INPUT	ANALOG 75% COLOR BAR to VIDEO IN
ADJ.	VR204 (BB C PHASE)[O3], VR3 (H POS 1)[G3], VR5 (H POS 2)[F1]

8000 SERIES

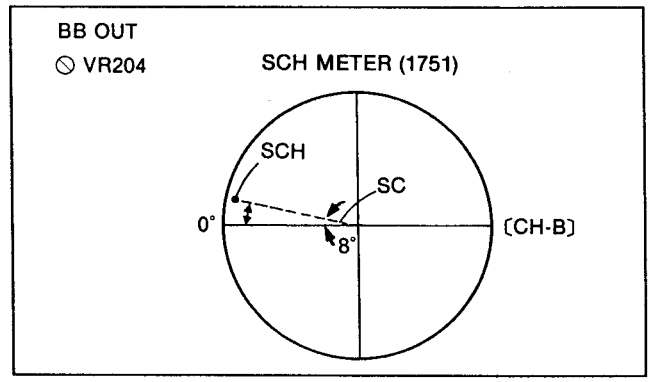

<STEP 1>
MACHINE CONDITION
Refer to SET UP Condition 3 at the beginning of this SECTION.(Page 7)

<STEP 2>
1. SCH METER : WFM mode, EXT trigger
2. SCH METER INPUT : CHA : SG VIDEO
   CHB : BB OUT
3. Adjust VR3 so that the H phase of BB out is same H sync phase with CHA (SG VIDEO) at training center position. This is a coarse adjustment of VR3.

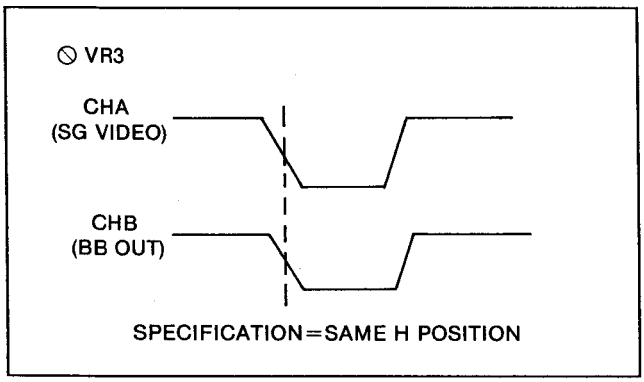

<STEP 3>
1. SCH METER : SCH mode, EXT trigger
   CHA : SG VIDEO
   CHB : BB OUT
2. Set the SCH meter CHA position at correct position. Select SCH meter to CHB.
3. Adjust VR5 so that the SCH of B.B out delayed +8° against REF IN.
4. Adjust VR204 so that the burst phase delayed +8° against burst on CHA.
5. +8° delay is caused by extention board. The SCH becomes 0°when L4 board is returned to VTR.

4-13. SYS SC PHASE ADJUSTMENT (2) (L4 : VIDEO PROCESS)

SPEC	REF IN BURST PHASE = VIDEO OUT 2 BURST PHASE
TEST	VIDEO OUT 2
MODE	EE2 (EJECT)
TAPE	
M.EQ	SCH METER
INPUT	TSG273 COLOR BAR to VIDEO IN
ADJ.	VR107 (SYS SC PHASE)[J2]

8000 SERIES

<STEP 1>
MACHINE CONDITION
Refer to SET UP Condition 2 at the beginning of this SECTION.

<STEP 2>
MENU CONDITION
VIDEO OUT MENU : F7
Select the SC to "UNITY" mode.

<STEP 3>
1. SCH METER : SCH : MODE
2. SCH INPUT : CHA
3. Adjust the phase VR on SCH METER so that the burst phase becomes standard position at SCH METER.

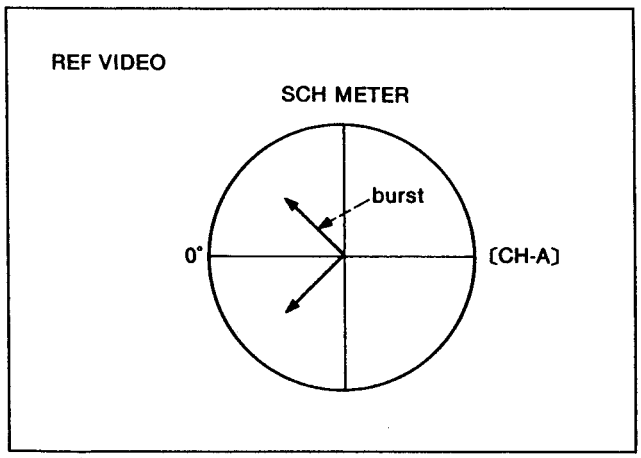

<STEP 4>
1. SCH INPUT : CHB
2. Adjustment VR107 so that the burst phase becomes the same phase as REF VIDEO (CHA).

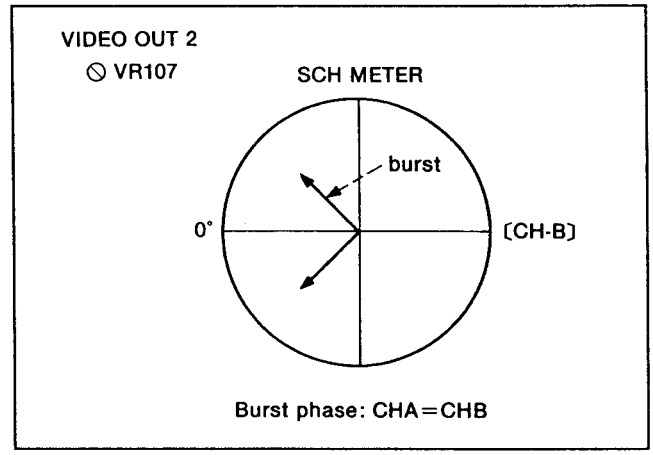

4-14. BB OUT SCH ADJUSTMENT (L4 : VIDEO PROCESS)

SPEC	BB OUT SCH = 0°
TEST	BB OUT
MODE	EE2 (EJECT)
TAPE	
M.EQ	SCH METER
INPUT	TSG273 COLOR BAR to VIDEO IN
ADJ.	VR206 (H POS 2 PAL) [N2]

8000 SERIES

<STEP 1>

1. SCH METER : WFM mode
2. SCH METER INPUT : CHB
3. Adjust the Phase VR on SCH METER so that the burst phase becomes standard position at SCH METER.
4. Adjust VR206 so that the SCH phase becomes 0° at SCH METER.

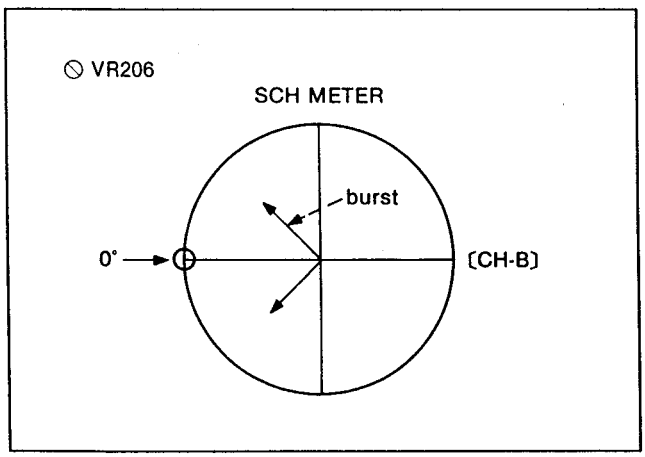

4-15. BB OUT H PHASE ADJUSTMENT (1) (L4 : VIDEO PROCESS)

SPEC	REF VIDEO IN H PHASE = BB OUT H PHASE
TEST	BB OUT
MODE	EE2 (EJECT)
TAPE	
M.EQ	SCH METER (WFM MODE)
INPUT	TSG273 COLOR BAR to VIDEO IN
ADJ.	VR3 (H POS 1) [G3]

8000 SERIES

<STEP 1>

MACHINE CONDITION

Refer to SET UP Condition 3 at the beginning of this SECTION.

<STEP 2>

1. SCH METER : WFM mode
2. SCH METER INPUT : CHA REF VIDEO
   CHB BB OUT
3. Adjust VR3 so that H phase is the same phase against the H phase on CHA.

Note: Adjust VR3 so that the H phase is Value of center stability condition.

4-16. BB OUT H PHASE ADJUSTMENT (2) (L4 : VIDEO PROCESS)

SPEC	TP304 PULSE RATIO IS SAME
TEST	TP303[G3], TP304[H2]
MODE	EE2 (EJECT)
TAPE	
M.EQ	OSCILLOSCOPE
INPUT	TSG273 COLOR BAR to VIDEO IN
ADJ.	VR3 (H POS 1)[G3]

8000 SERIES

<STEP 1>
MACHINE CONDITION
Refer to SET UP Condition 3 at the beginning of this SECTION.

<STEP 2>
1. SCH METER : WFM mode
2. Confirm that the BB OUT H phase at SCH METER.

<STEP 3>
1. SCOPE CH1 : TP303
   CH2 : TP304
2. SCOPE TRIGGER : CH1
3. Adjust VR3 so that the relation between HC signal and H0 signal as shown in Figure.

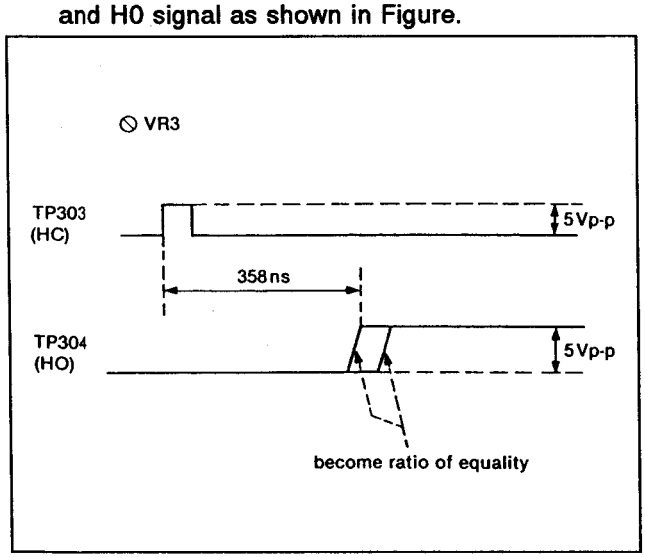

4-17. BB OUT BURST LEVEL ADJUSTMENT (L4 : VIDEO PROCESS)

SPEC	BB OUT BURST = 30mVpp
TEST	BB OUT
MODE	EE2 (EJECT)
TAPE	
M.EQ	SCH METER (WFM MODE)
INPUT	TSG273 COLOR BAR to VIDEO IN
ADJ.	VR205 (BB BS GAIN)[O2]

8000 SERIES

<STEP 1>
MACHINE CONDITION
Refer to SET UP Condition 3 at the beginning of this SECTION.(Page 7)

<STEP 2>
1. SCH METER : WFM mode, EXT trigger
2. SCH METER INPUT : CHA : SG VIDEO
   CHB : BB OUT
3. Adjust VR205 so that the burst level is 300mVp-p.
4. Confirm that the CHB (BB OUT) H phase and burst level on CHA (REF VIDEO).

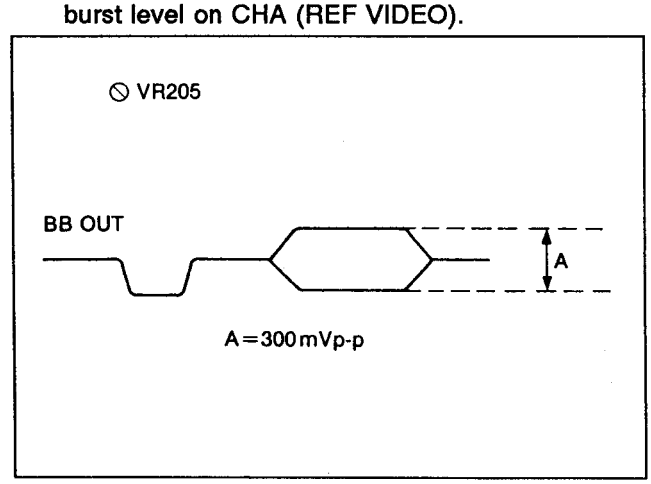

4-18. BB OUT BURST POSITION & WIDTH ADJUSTMENT (L4 : VIDEO PROCESS)

SPEC	REF BURST POSITION = BB BURST POSITION
TEST	BB OUT
MODE	EE2 (EJECT)
TAPE	
M.EQ	SCH METER (WFM MODE)
INPUT	TSG273 COLOR BAR to VIDEO IN
ADJ.	VR200 (BB BS POS)[N1], VR201 (BB BS WIDTH)[N1]

8000 SERIES

<STEP 1>
MACHINE CONDITION
Refer to SET UP Condition 3 at the beginning of this SECTION.

<STEP 2>
1. SCH METER : WFM mode
2. Adjust VR200 so that the phase of SYNC (CHB) is mach with the REF signal (CHA) as shown in Figure.
3. Adjust VR201 so that the width of burst (CHB) is match with the REF signal (CHA) as shown in Figure.

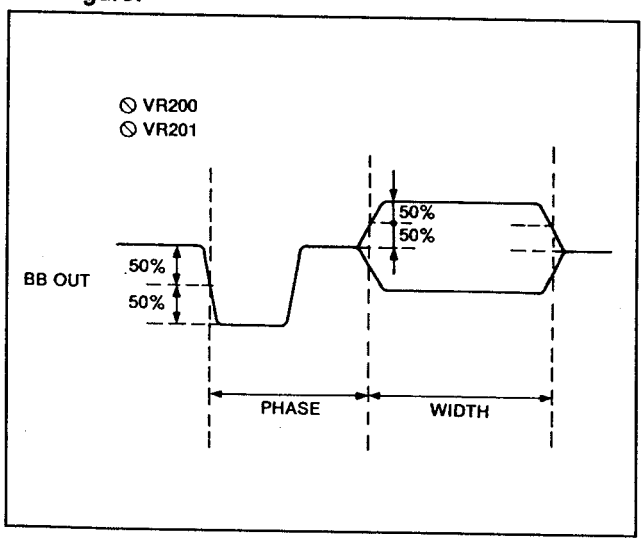

4-19. SYSTEM H PHASE (OUT REF = INCOM) ADJUSTMENT (1) (L4 : VIDEO PROCESS)

SPEC	CF LOCK
TEST	TP5[H2], TP1[I3], VIDEO OUT
MODE	EE2 (EJECT)
TAPE	
M.EQ	OSCILLOSCOPE
INPUT	FLAT FIELD 50% to VIDEO IN and REF VIDEO IN
ADJ.	CONFIRMATION

8000 SERIES

<STEP 1>
1. Confirm that the adjustment of L2 and S9 sections are completed.

<STEP 2>
MENU CONDITION
HOME MENU SET UP
Select the OUT REFERENCE to "INCOM".

<STEP 3>
1. SCOPE CH1 : TP1
   CH2 : TP5
2. Confirm that the relation between REF VIDEO and CF pulse is as shown in Figure.
3. If the ID WHITE 100% signal does not appeared on indicated position as shown in Figure, Re-adjustment with INCOME CF DETECTION Adjustment (1), (2) and (4) of S9 Board adjustment Section.

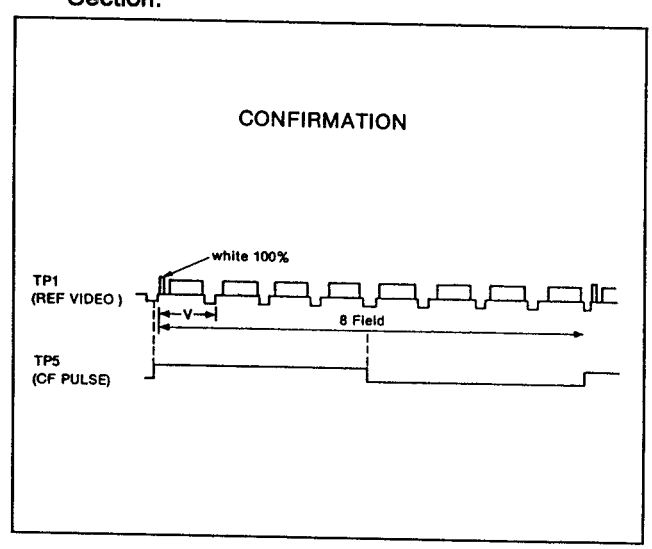

4-20. SYSTEM H PHASE (OUT REF = INCOM) ADJUSTMENT (2) (L4 : VIDEO PROCESS)

TEST	VIDEO OUT
MODE	EE2 (EJECT)
TAPE	
M.EQ	SCH METER (WFM MODE)
INPUT	TSG273 COLOR BAR to VIDEO IN and VIDEO IN
ADJ.	VR4 (IH POS)[I4]

8000 SERIES

<STEP 1>
1. Confirm that the adjustment with L2 and S9 sections completed.

<STEP 2>
MENU CONDITION
HOME MENU SET UP
Select the OUT REFERENCE to "INCOM".

<STEP 3>
MACHINE CONDITION
Refer to SET UP CONDITION 2 at the beginning of this SECTION.

<STEP 4>
1. SCH METER : WFM Mode
2. Adjust VR4 so that the H phase on CHB is matched REF signal (CHA).

4-21. SYSTEM H PHASE (OUT REF = INCOM) ADJUSTMENT (3) (L4 :VIDEO PROCESS)

SPEC	TP304 EQUAL RATIO
TEST	TP303 [G3], TP304 [H2]
MODE	EE2 (EJECT)
TAPE	
M.EQ	OSCILLOSCOPE
INPUT	TSG273 COLOR BAR to VIDEO IN
ADJ.	VR4 (IH POS)[I4] (FINE)

8000 SERIES

<STEP 1>
1. Confirm that the adjustment with L2 and S9 sections completed.

<STEP 2>
MENU CONDITION
HOME MUNU SET UP
Select the OUT REFERENCE to "INCOM".

<STEP 3>
MENU CONDITION
Refer to SET UP CONDITION 2 at the beginning of this SECTION.

<STEP 4>
1. SCOPE CH1 : TP303
   CH2 : TP304
2. SCOPE TRIGGER : CH1
3. Adjust VR4 so that the relation between HC signal as shown in Figure.

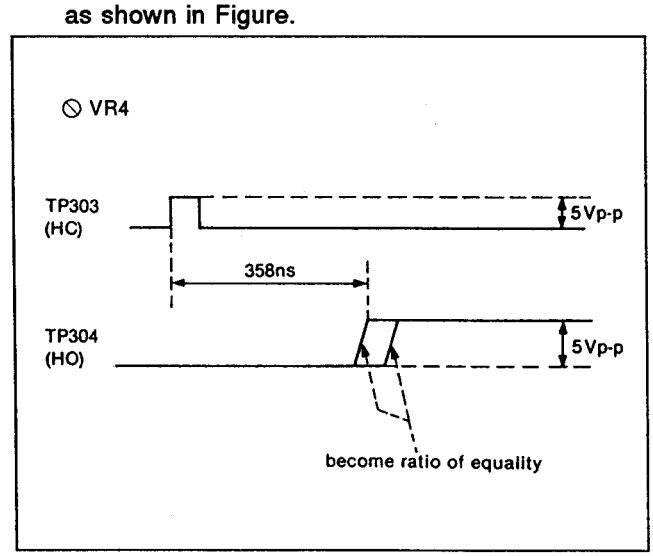

4-22. DIGITAL VIDEO OUT CLOCK PHASE ADJUSTMENT (L4 : VIDEO PROCESS)

TEST	DIGITAL VIDEO OUT 25PIN D-SUB
MODE	EE1
TAPE	
M.EQ	OSCILLOSCOPE
INPUT	COLOR BAR to VIDEO IN and VIDEO IN
ADJ.	SW860 [M8], SW861 [M8]

8000 SERIES

<STEP 1>

SCOPE CH1 : DIGITAL VIDEO OUT
D-SUB 1Pin
SCOPE CH2 : DIGITAL VIDEO OUT
D-SUB 7Pin

<STEP 2>

Adjust SW860 and SW861 so that the clock and data phase is shown in figure.

(1) Set SW861-7bit to ON and SW860 -2 bit to ON or set SW861-8bit to ON and set one of the bit of SW861 bit1 - bit5 to ON.

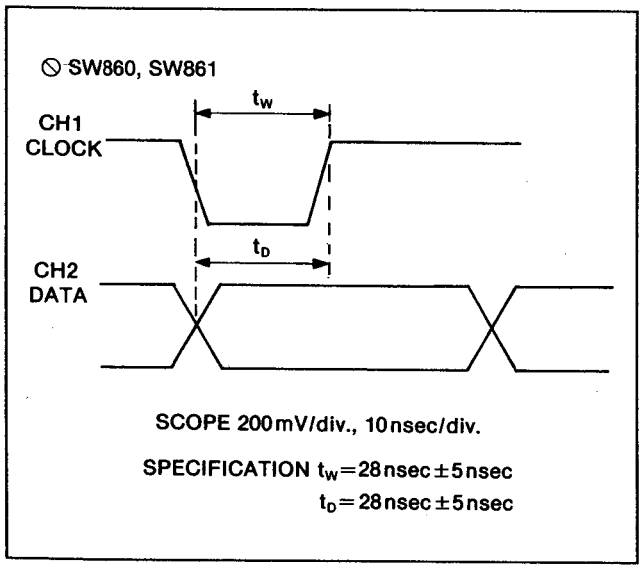

5. REC/PLAY CH0 (S1) BOARD
REC/PLAY CH1 (S2) BOARD

Adjust procedure with S1 and S2 board the same.

MACHINE CONDITION

Set the SW51 on the L2 board to OFF as shown in Figure 1.
Turns Line and Field shuffle off.

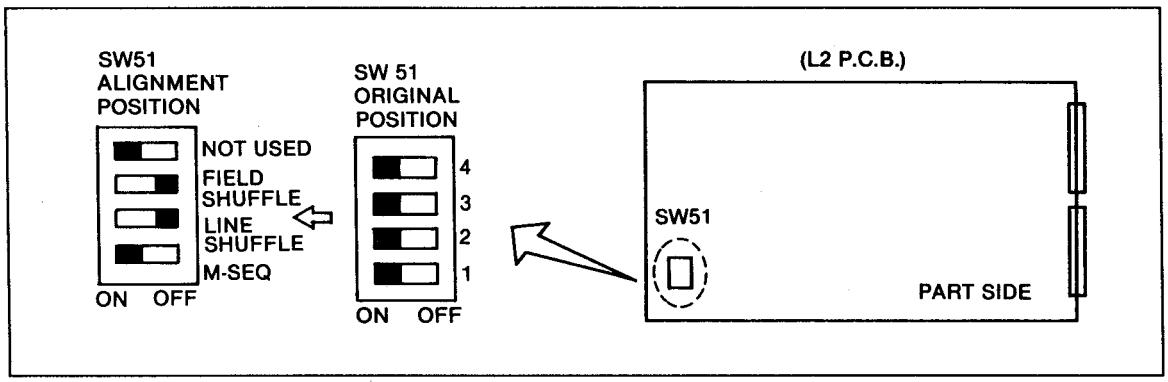

Figure 1.

1. Set the SW1, 2, 3 and 4 on the L3 P.C.B. follow the Figure 2.
2. Set the SW802 on the L4 P.C.B. follow the Figure 2.
3. Confirm that the 5 LED's are turned ON.

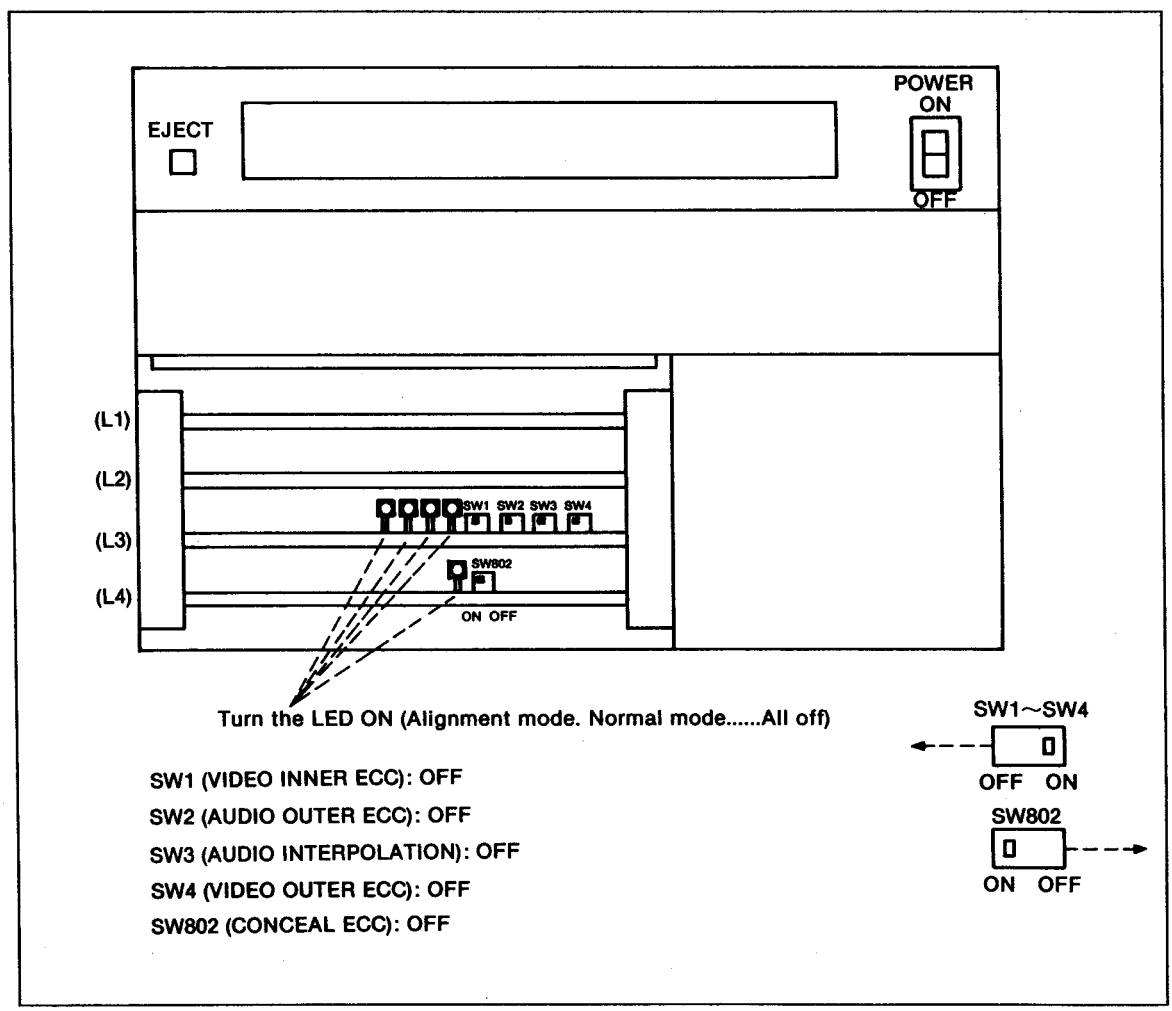

Figure 2.

Set the Dip SW's on the S1 and S2 P.C.B. follow the as shown in Figure 3.

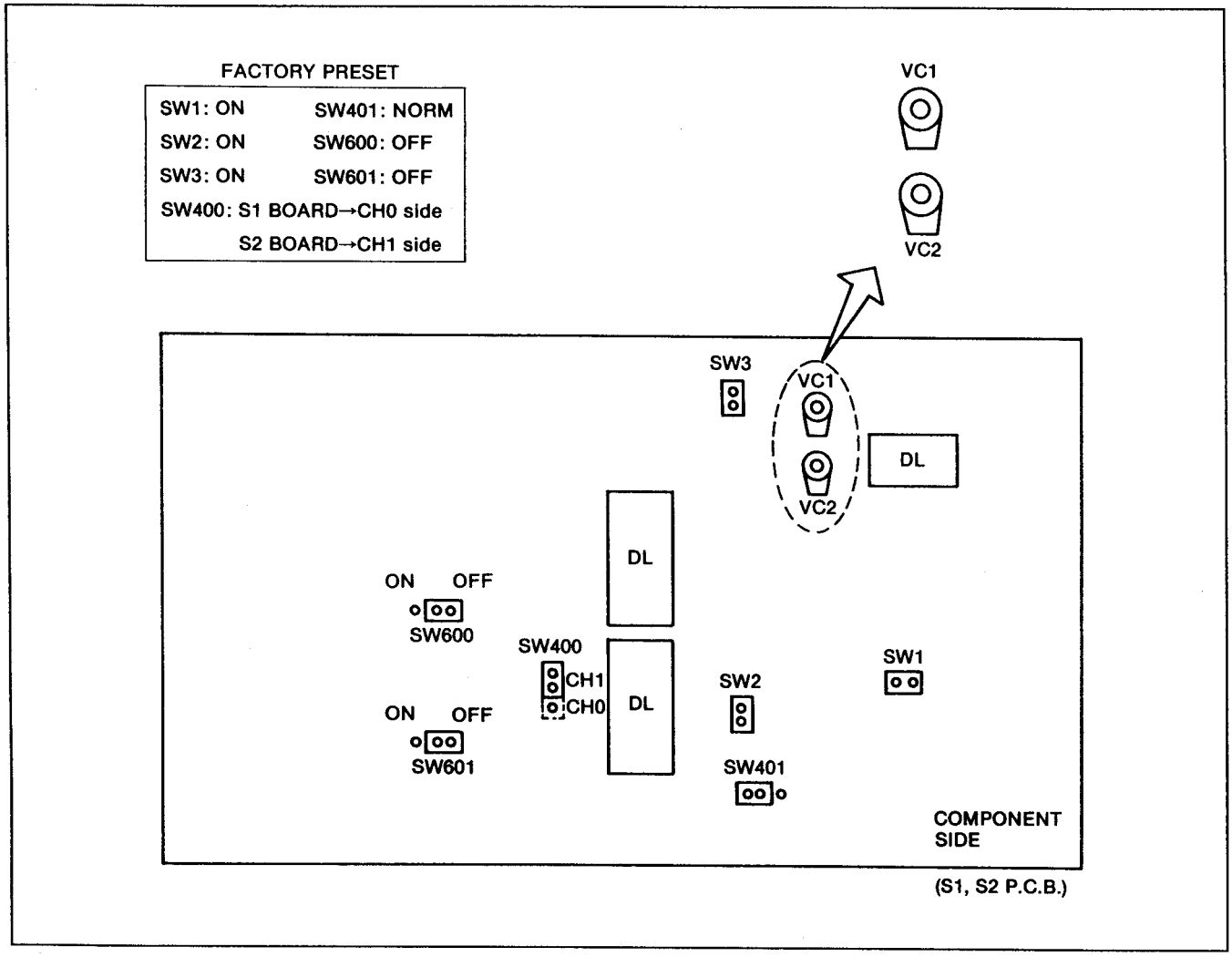

Figure 3.

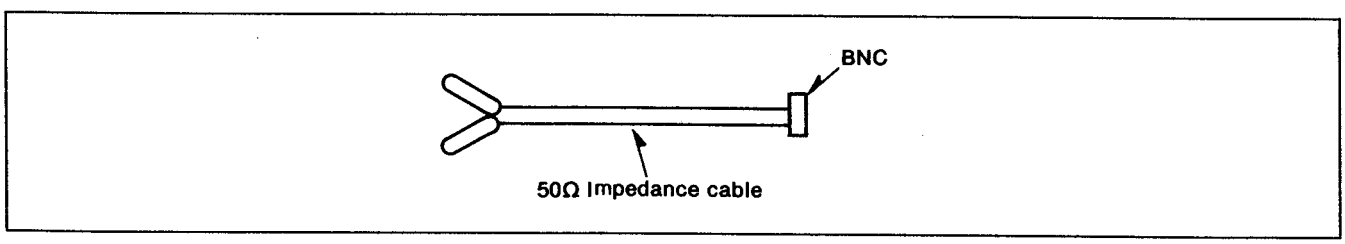

NOTE :

1. These VRs are not used as follows. VR600, VR601, VR602, VR603, VR604, VR605, VR606, VR607, VR614, VR615
2. Set the VR506, VR508 and VR509 as follows.

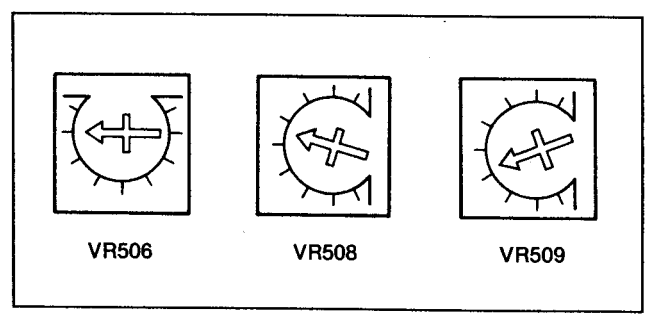

5-1. PLL ADJUSTMENT (S1 : REC/PLAY CH0) (S2 : REC/PLAY CH1)

<STEP 1>

SPEC	TP304 = 2.5V DC ± 0.05V DC
TEST	TP304 [A1]
MODE	VIDEO OUT SET UP STATE EE2, STBY OFF
TAPE	
M.EQ	OSCILLOSCOPE
INPUT	75% COLOR BAR to VIDEO IN
ADJ.	

5000 SERIES

1. SCOPE : TP304
2. Set VTR into STAND BY OFF mode.
3. Confirm that the DC voltage is 2.5 ± 0.05V DC. If it is not confirm the Servo HT (Head Tape relative speed) signal on S5 board.

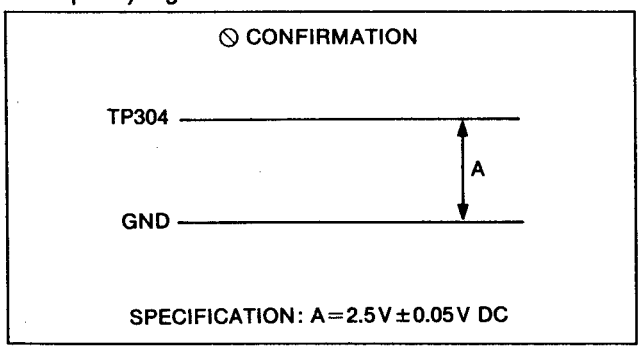

PLL ADJUSTMENT

<STEP 2>

SPEC	1.4V DC ± 0.02V
TEST	L301 lower side in shield case
MODE	EE2 (EJECT)
TAPE	
M.EQ	OSCILLOSCOPE
INPUT	75% COLOR BAR to VIDEO IN
ADJ.	VL300 (OSC OFFSET)[B1]

5000 SERIES

1. SCOPE: L301 lower side
2. Adjust VL300 (OSC OFFSET) so that the voltage is 1.4 ± 0.02V DC.

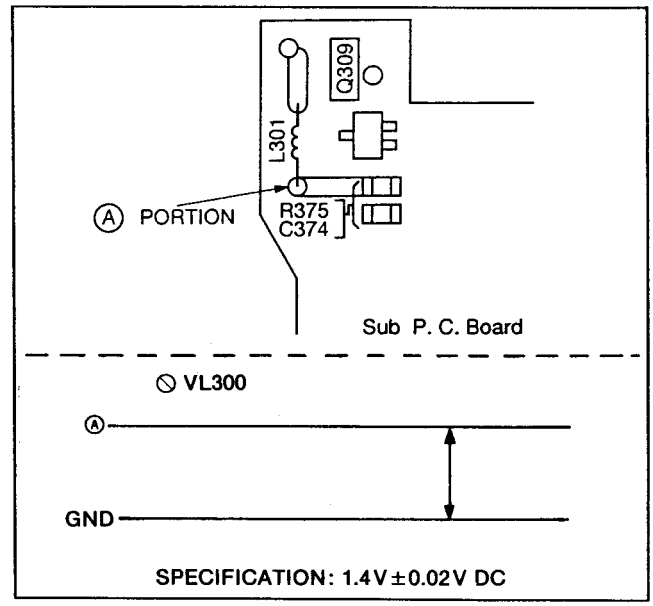

PLL ADJUSTMENT

<STEP 3>

SPEC	TP303 DC VOLT = TP302 DC VOLT
TEST	TP302 [C1], TP303 [B1]
MODE	EE2 (EJECT)
TAPE	
M.EQ	OSCILLOSCOPE
INPUT	75% COLOR BAR to VIDEO IN
ADJ.	VR300 (PLL OFFSET)[A1]

5000 SERIES

1. SCOPE CH1 : TP302
   CH2 : TP303
2. Adjust VR300 (PLL OFFSET) so that the voltage of TP302 and TP303 are same.

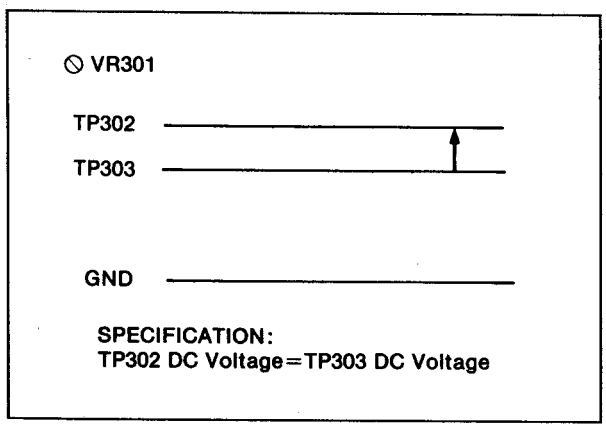

PLL ADJUSTMENT

<STEP 4>

SPEC	TP300 IS MAXIMUM PEAK TO PEAK
TEST	TP300 [B2]
MODE	TAPE mode STBY OFF
TAPE	COLOR BAR
M.EQ	OSCILLOSCOPE
INPUT	75% COLOR BAR to VIDEO IN
ADJ.	VR10 (COMP BIASE)[F1]

5000 SERIES

1. Insert an adjustment tape color bar portion.
2. Set the STBY OFF status to "TAPE" mode.
   VIDEO OUT SET UP TAPE
3. Set the VTR into STBY OFF mode.
4. SCOPE : TP300
5. Adjust VR10 (COMP BIASE) so that the data signal level is maximum.

Note: Set the 20MHz Filter of oscilloscope to OFF mode.

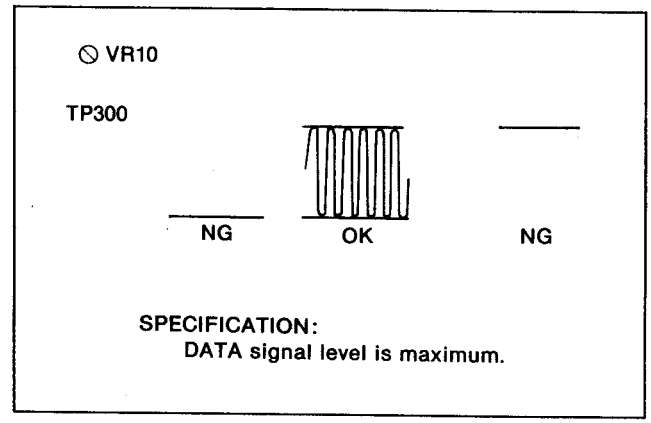

PLL ADJUSTMENT

<STEP 5>

SPEC	TP302 DC VOLTAGE = TP303 DC VOLTAGE
TEST	TP302 [B1], TP303 [B1]
MODE	TAPE mode STBY OFF
TAPE	COLOR BAR
M.EQ	OSCILLOSCOPE
INPUT	75% COLOR BAR to VIDEO IN
ADJ.	VR301 (DC BALANCE)[C1]

5000 SERIES

1. SCOPE CH1 : TP302
   CH2 : TP303
2. Adjust VR301 (DC BALANCE) so that the voltage of TP302 and TP303 are same.

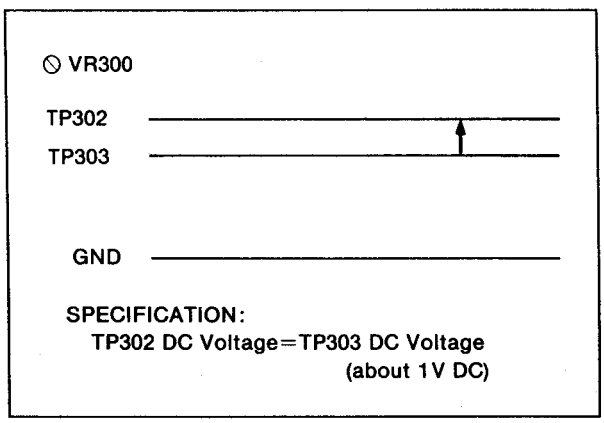

PLL ADJUSTMENT

<STEP 6>

SPEC	TP301 CLOCK IS LOCKED WITH TP300
TEST	TP301 [B2], TP300 [B2]
MODE	EE2 (EJECT)
TAPE	
M.EQ	400MHz OSCILLOSCOPE
INPUT	75% COLOR BAR to VIDEO IN
ADJ.	CONFIRMATION ONLY

5000 SERIES

1. Set the STBY OFF status to "EE2" mode.
   VIDEO OUT SET UP
2. SCOPE CH1 : TP301/TPG300
   CH2 : TP300 --- TRIGGER
3. SCOPE : 500mV/AC
   SETTING : SWEEP = 10nsec/div
4. Confirm that the DATA signal and CLOCK signal are frequency locked.

Note: Set the 20MHz Filter of oscilloscope to OFF mode.

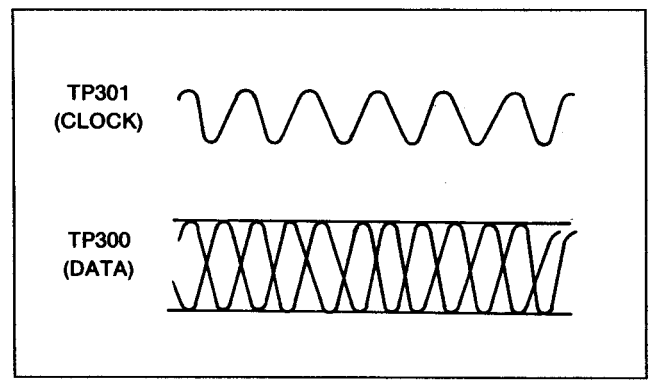

5-2. ENVELOPE MAX ADJUSTMENT (S1 : REC/PLAY CH0) (S2 : REC/PLAY CH1)

SPEC	RF ENVELOPE IS MAXIMUM
TEST	TP8[E2], P3-B22(RIGHT SIDE) of Extension Board
MODE	VAR (X1)
TAPE	SHUFFLING OFF 75% COLOR BAR ALIGNMENT TAPE
M.EQ	OSCILLOSCOPE
INPUT	
ADJ.	ADJ. KNOB (on the Front Panel), AT HEIGHT

5000 SERIES

<STEP 1>
MENU CONDITION
TEST SERVO AT HEIGHT

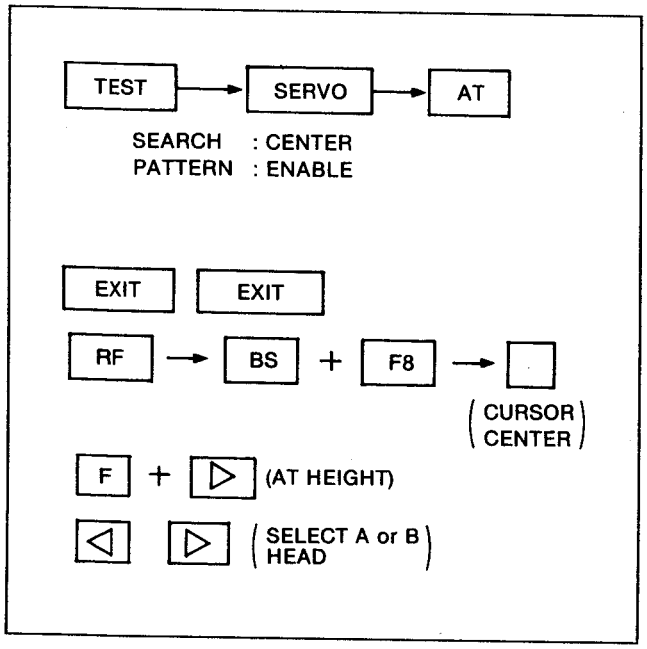

<STEP 2>
1. Playback a shuffling off 75% Color bar Alignment Tape on VAR X1 mode.
2. Adjust the Adj. KNOB VR on the Front Panel so that the Envelope is maximum.

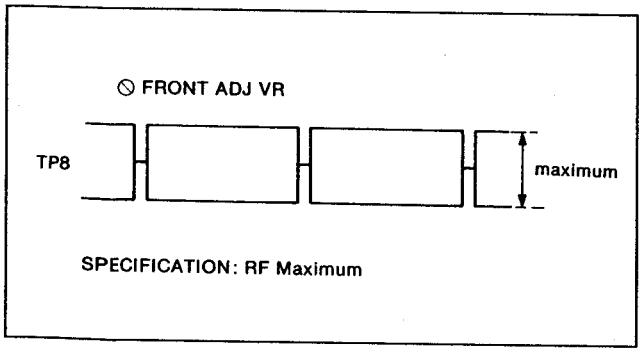

5-3. AB DC BAL ADJUSTMENT (S1 : REC/PLAY CH0) (S2 : REC/PLAY CH1)

SPEC	CHA DC = CHB DC
TEST	TP1[H3], TP400[F4]
MODE	VAR (X1)
TAPE	SHUFFLING OFF 75% COLOR BAR ALIGNMENT TAPE
M.EQ	OSCILLOSCOPE
INPUT	
ADJ.	VR1 (A/B DC BAL)[H1]

5000 SERIES

<STEP 1>
1. SCOPE CH1 : TP1 : TPG1
   CH4 : TP400
2. SCOPE CH1 : 50mV/DC 50Ω
   CH4 : 5V/DC
3. SCOPE MODE : CH0P
4. SCOPE TRIG : CH4
5. SCOPE SWEEP : A = 2ms/div
   B = 50μS/div
6. Adjust VR1 so that the Envelope is as shown in Figure.

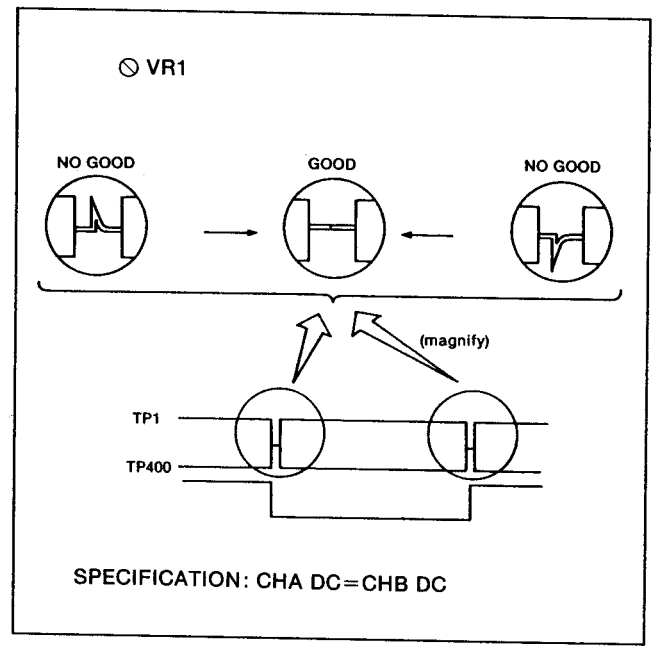

5-4. ENVELOPE DETECTION ADJUSTMENT (S1 : REC/PLAY CH0) (S2 : REC/PLAY CH1)

SPEC	ENVELOPE MINIMUM DC LEVEL = 0V ± 0.2VDC ENVELOPE MAX. = 2Vp-p ± 0.2V
TEST	TP502 [H4], TP400 [F4], TP8 [E2]
MODE	STILL
TAPE	SHUFFLING OFF 75% COLOR BAR ALIGNMENT TAPE
M.EQ	OSCILLOSCOPE
INPUT	
ADJ.	VR2(A/B GAIN BAL)[H1], VR500(ENV GAIN)[I4], VR501 (ENV OFFSET) [I4]

5000 SERIES

<STEP 1>
MENU CONDITION

TEST SERVO AT

Set the [PATTERN] to "FIX".

SEARCH = CENTER
PATTERN = FIX

<STEP 2>
1. SCOPE CH1 : TP502
   SCOPE CH2 : TP400
2. SCOPE SETTING : 1V/DC
   SCOPE CH2 : 5V
3. SCOPE MODE : CH0P
   BW
4. SCOPE TRIG : CH2
5. SCOPE SWEEP : 2ms
6. Place the unit in the STILL mode.
7. Adjust VR501 so that the minimum signal level is 0V ± 0.2V as shown in Figure.

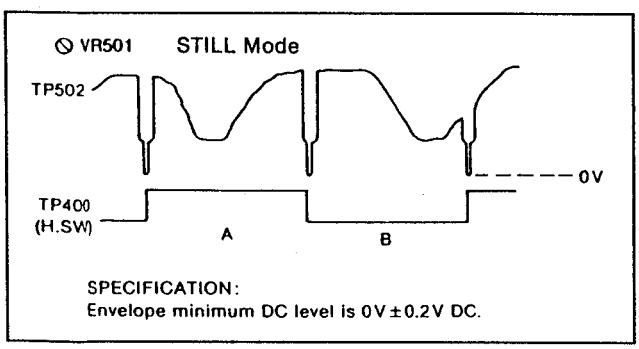

<STEP 3>
1. SCOPE CH1 : TP502
   SCOPE CH2 : TP400
2. Rotate capstan shaft by hand (CCW) and set the Envelope becomes maximum during Head Switch A portion.
3. Adjust VR500 (ENV GAIN) so that the maximum envelope level is 2V ± 0.2V.

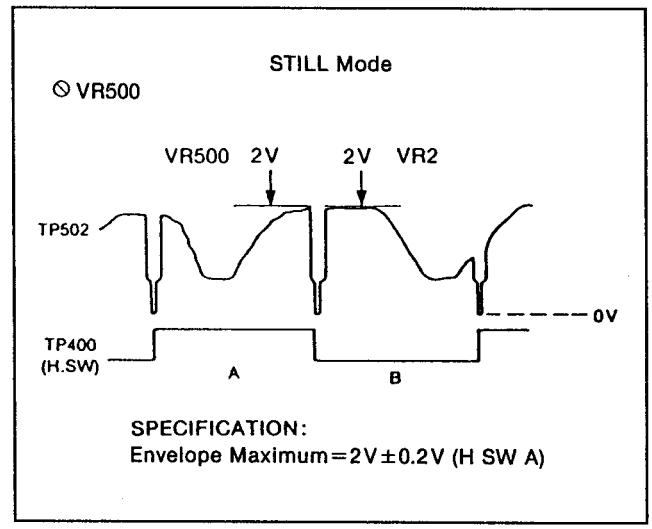

4. Rotate capstan shaft by hand (CCW) and set the Envelope becomes maximum during Head switch B portion.
5. Adjust VR2 (A/B GAIN BAL) so that the maximum envelope is 2V ± 0.2V.
6. After adjustment set the AT HEIGHT is 0.
7. After this adjustment, item 8-1 ENVELOPE DETECTION ADJUSTMENT is required.

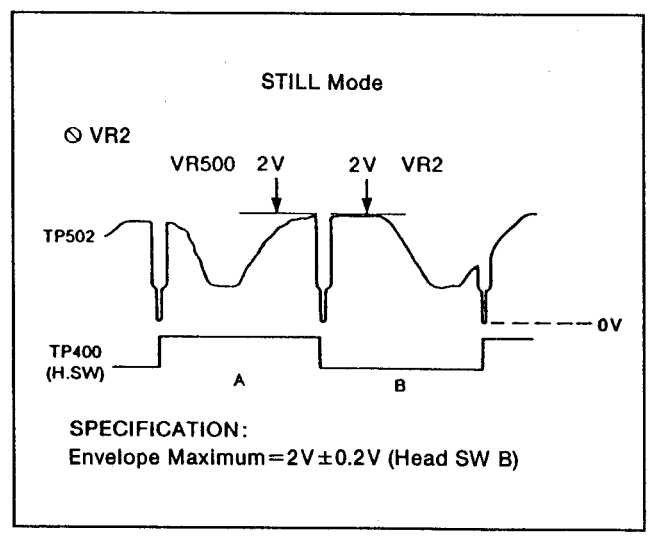

5-5. EQUALIZATION ADJUSTMENT (1)
(S1 : REC/PLAY CH0)
(S2 : REC/PLAY CH1)

Factory Preset only, skip this item after Head Replacement.

SPEC	
TEST	TP8[E2], VIDEO OUT, TP400[F4]
MODE	VAR (× 1)
TAPE	SHUFFLING OFF 75% COLOR BAR ALIGNMENT TAPE
M.EQ	SPECTRUM ANALYZER
INPUT	
ADJ.	See Below

5000 SERIES

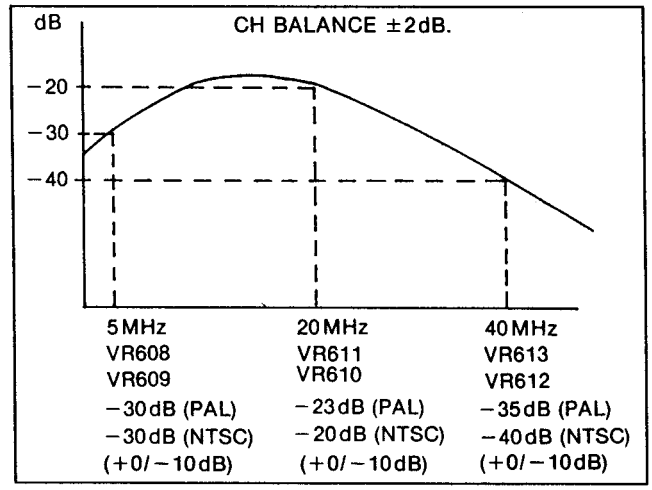

<STEP 1>
Adjustment VR.
(1) VR3 (PHASE SHIFT) -------6 division
(2) VR609 (MAG A) ----------7 division
VR608 (MAG B) ----------7 division
(3) VR613 (AFC HA) ----------5 division
VR612 (AFC HB) ----------5 division
(4) VR611 (AFC MA) ----------2 division
VR610 (AFC MB) ----------2 division

<STEP 2>
1. Set the spectrum analyzer to REG 4 mode.
REG 4 mode

ITEM PARAMETER

(1)	REF LEVEL	-10.0dBm
(2)	ATTEN	10dB
(3)	DIV (dB/DIV)	5dB/div
(4)	START FREQUENCY	0MHz
(5)	STOP FREQUENCY	50MHz
(6)	RES BW	1MHz
(7)	VIDEO BW	3kHz
(8)	SWEEP TIME	300msec
(9)	TRIGGER	EXT (HEAD SW)
(10)	VID AVG	10

<STEP 3>
EQUALIZER COARSE ADJUSTMENT
1. Connect the spectrum analyzer to TP8.
2. Connect the EXT Trigger input of the spectrum analyzer to TP400 (HEAD SW).
3. Adjust VR609 (MAG A) and VR608 (MAG B) so that the gain is -30dB +0/-10dB at 5MHz portion.
4. Adjust VR613 (AFC HA) and VR612 (AFC HB) so that the gain is -35dB +0/-10dB at 40MHz portion.
5. Adjust VR611 (AFC MA) and VR610 (AFC MB) so that the gain is -23dB +0/-10dB at 20MHz portion.

Note: If still out of specification.
Just adjust as A curve as shown in Figure.
And then carry on next the adjustment.

5-6. EQUALIZATION ADJUSTMENT (2)
(S1 : REC/PLAY CH0)
(S2 : REC/PLAY CH1)

SPEC	MINIMUM ERROR RATE
TEST	TV MONITOR, FRONT ERROR DISPLAY
MODE	VAR (× 1)
TAPE	SHUFFLING OFF 75% COLOR BAR ALIGNMENT
M.EQ	SPECTRUM ANALYZER
INPUT	
ADJ.	VR611 (AFC MA)[F1], VR610 (AFC MB)[F1], VR613 (AFC HA)[E1], VR612 (AFC HB)[E1], VR10 (COMP BIAS LEVEL)[F1], VC301 (PHASE ADJ)[A2], VC1 (RESON A)[G2], VC2 (RESON B)[G2], VR3 (PHASE SHIFT)[I2] VR608(MAG B), VR609(MAG A)[D1], VR11 (AUTO EQ IN LEVEL)[E1] VR12 (AFC MATCH)[F4]

5000 SERIES

[RF SECTION]

<STEP 1>

1. Use the "75% Color Bars Shuffle OFF" tape.
2. Search = "CENTER"
   Maximize the envelope bar graphs on the front panel by adjusting the AT heights in the SUPER USER Menu.
3. Choose "PB mode : ch0" on the SUPER USER MENU when adjusting the Equalizer CH0 board, and "PB mode : ch1" for the CH1 board at the same time video output picture must be stable.
4. Center VC1/VC2.
5. Use VR3/VR10/VC301 to minimize errors (speckling) on the picture monitor. Continue adjusting these three pots until no further improvement is possible.
6. Use VC1, VC2 & VR3 to further reduce the errors.
7. Use VC1, VC2 & VR10 in the same manner.
8. Adjust VC301 to minimize screen errors and adjust VR12 to minimize screen errors.
9. Change the ECC Sample on the TEST/RF Menu to fast.
10. Memorize the spectrum waveform on TP8 into the "B" memory of the HP8591A Spectrum Analyzer.
11. Next adjust VR613 & 611 to reduce the error rate further. Turn VR613 very slightly in the direction which reduces the INNER ERROR RATE in the "CH0 A" bar graph. Then adjust VR611 very slightly in the opposite direction CCW to reduce the error further. Continue this alternate adjustment of the pots until no more improvement is possible.
12. Repeat this same adjustment technique starting with VR612 and following with VR610, in order to minimize the INNER ERROR RATE on the "CH0 B" bar graph.
13. Recall the previously memorized waveform in the Spectrum Analyzer "B" memory, and compare it to the waveform now present on TP8. If the two waveforms aren't similar in appearance, adjust the two pairs of pots 613/611 (CHA) & 612/610 (CHB) in the manner described above, for minimum error rate for both heads, and similar spectrum waveshapes.
14. Adjust VR608 & 609 to minimize the "sawtooth" appearance of the spectrum waveform at the 5Mhz end.
15. Adjust VR10 & VC301 to further reduce the Inner Error Rate.

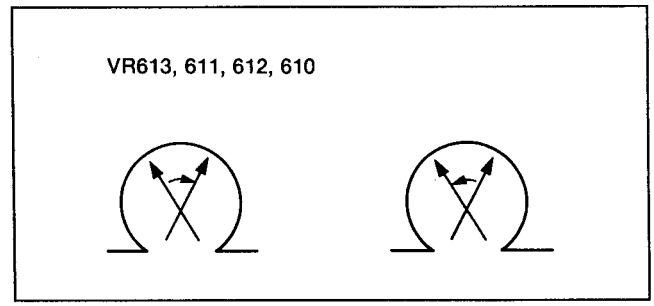

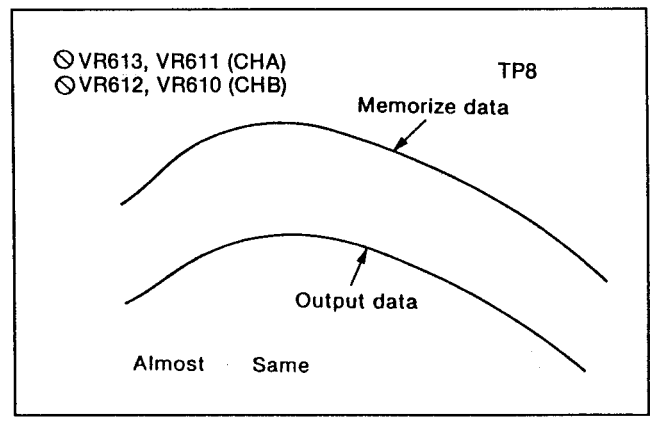

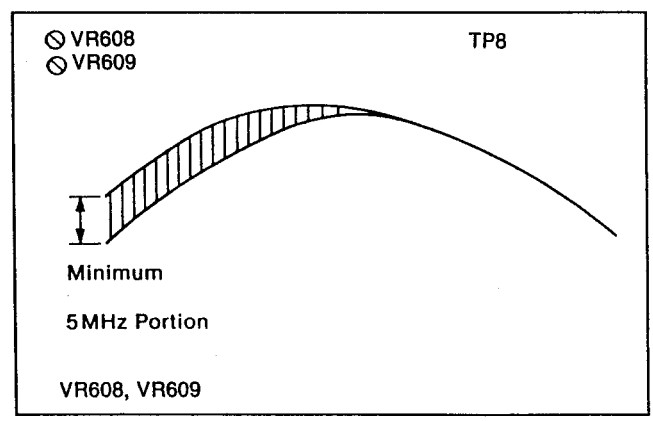

16. Confirm the error rate is less than 10-4 (scale 3).

⊘ CONFIRMATION

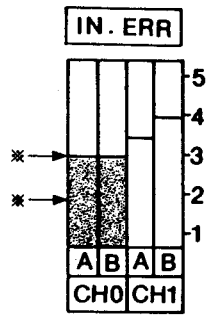

TYPICAL VALUE: Error rate is less than scale 3.

Note: After equalization adjustment, RF envelope output level adjustment is required as follows.

1. Connect the scope to TP8 and place the unit in PLAY mode.
2. Adjust VR608 and VR609 so that the output envelope is 400mVp-p. (50Ω terminated).
3. Connect the scope to WFM out and adjust VR11 so that the output envelope is 200mVp-p (75Ω terminated).

5-7. WFM OUT CONFIRMATION (S1 : REC/PLAY CH0) (S2 : REC/PLAY CH1)

SPEC	EYE : 200mV ± 50mV
TEST	WFM OUT
MODE	VAR X1
TAPE	SHUFFLING OFF 75% COLOR BAR ALIGNMENT TAPE
M.EQ	OSCILLOSCOPE
INPUT	
ADJ.	VR11 (AUTO EQ IN LEVEL)[E1],

5000 SERIES

<STEP 1>

1. Connect the scope to VFM OUT on the rear panel through 75Ω termination.
2. Set the Front Menu to WFM ENV mode.
3. Confirm the ENVELOPE level is 900mV ± 200mV.
4. Set the Front Menu to WFM EYE mode.
5. Adjust VR11 (AUTO EQ IN LEVEL) so that the level is 200mV ± 50mV.

FINAL CONFIRMATION

SPEC	Refer to figure
TEST	TP8 [E2], TP400 [f4]
MODE	VAR × 1
TAPE	SHUFFLING OFF 75% COLOR BAR
M.EQ	SPECTRUM ANALYZER
INPUT	
ADJ.	VR3,VR610,VR611,VR612,VR613,VC1,VC2

1. Set the spectrum analyzer as shown in item 5-5.
2. Connect the spectrum analyzer to TP8.
3. Connect the EXT input of spectrum analyzer to TP400.
4. Confirm that the output spectrum is as shown in figure.
5. If it is not, readjust VR3, VC1, VC2 (PHASE), VR610, VR612, VR611 and VR613 (LEVEL).

5MHz = 30MHz ± 2MHz (NTSC)
35MHz ± 2MHz (PAL)

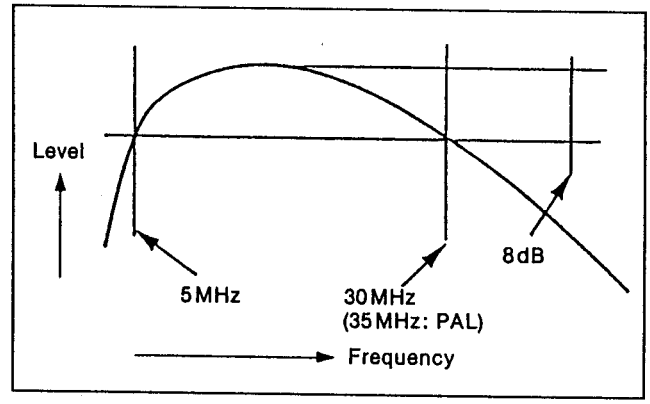

7. CUE AUDIO (S3) BOARD MODE CONDITION

Set the Switches on the AUDIO IN.OUT P.C.B. and set the MENU condition.

INPUT ATT SELECT SW 0dBm
(on the AUDIO IN/OUT Board)
OUTPUT ATT SELECT SW 0dBm
(on the AUDIO IN/OUT Board)
INPUT IMPEDANCE SW ..... HIGH
(on the AUDIO IN/OUT Board)
MENU CONDITION
AUDIO IN MENU
Select the CUE AUDIO LEVEL to "UNITY" : F5
AUDIO OUT MENU
Select the CUE AUDIO LEVEL to "UNITY" : F5

7-1. MASTER OSC DRIVE VOLTAGE ADJUSTMENT (S3 : CUE AUDIO)

SPEC	21V ± 0.1V DC
TEST	TP1[I5]
MODE	REC PLAY
TAPE	BLANK TAPE
M.EQ	OSCILLOSCOPE
INPUT	
ADJ.	VR1 (21V ADJ.)[I4]

<STEP 1>
1. SCOPE : TP1
2. Place the unit in the RECPLAY mode.
3. Adjust VR1 so that the DC voltage is 21V ± 0.1V DC.

7-2. MASTER OSC ADJUSTMENT (S3 : CUE AUDIO)

SPEC	TP2 = 70kHz ± 0.2kHz, 5.5Vpp ± 1.0V TP3 = 5.5Vpp ± 1.0V
TEST	TP2[H2], TP3[G2]
MODE	REC PLAY
TAPE	BLANK TAPE
M.EQ	FREQUENCY COUNTER, OSCILLOSCOPE
INPUT	
ADJ.	T1[H2], T1 on S3 SUB2

<STEP 1>
1. FREQUENCY COUNTER : TP2
2. Place the unit in the RECPLAY mode.
3. Adjust T1 so that the OSC frequency is 70kHz ± 0.2kHz.

<STEP 2>
1. SCOPE CH1 : TP2
   CH2 : TP3
2. Place the unit in the RECPLAY mode.
3. Confirm that the OSC frequency level A is 5.5 ± 1.0Vp-p as shown in Figure.

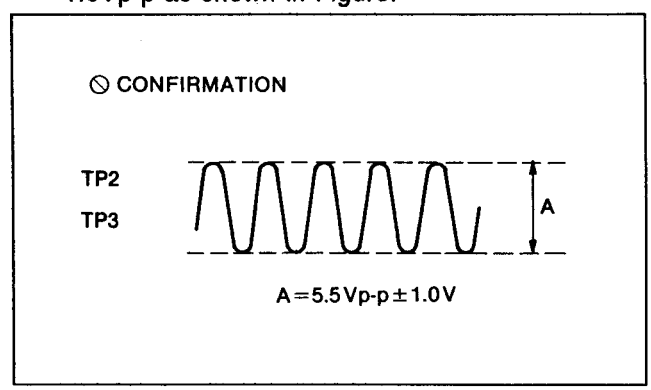

<STEP 3>
1. Scope CH1 : PIN 6 of S3 SUB2
2. Adjust T1 on S3 SUB2 so that the OSC level becomes maximum.

<STEP 4>
1. SCOPE CH1 : PIN 6 of S3 SUB2
   CH2 : PIN 7 of S3 SUB2
2. Confirm the OSC level is 5.5Vpp ± 1V.
3. Confirm the frequency is 140 kHz ± 5kHz.

7-3. FULL ERASE CURRENT ADJUSTMENT (S3 : CUE AUDIO)

SPEC	TP4 : more than 508mVp-p, T = 30msec ± 10msec
TEST	TP4[H1]
MODE	RECPLAY, RECPLAY ↔ STOP
TAPE	BLANK TAPE
M.EQ	OSCILLOSCOPE (STORAGE)
INPUT	
ADJ.	T2[I1]

<STEP 1>
1. SCOPE : TP4
2. Place the unit in RECPLAY mode.
3. Adjust T2 so that the signal level A is maximum.
4. Confirm that level A is more than 508mVp-p.

<STEP 2>
1. Place the unit moving to RECPLAY from STOP mode and moving to STOP from RECPLAY mode.
2. Confirm that the rising and falling period of the waveform is 30ms ± 10ms as shown in Figure.

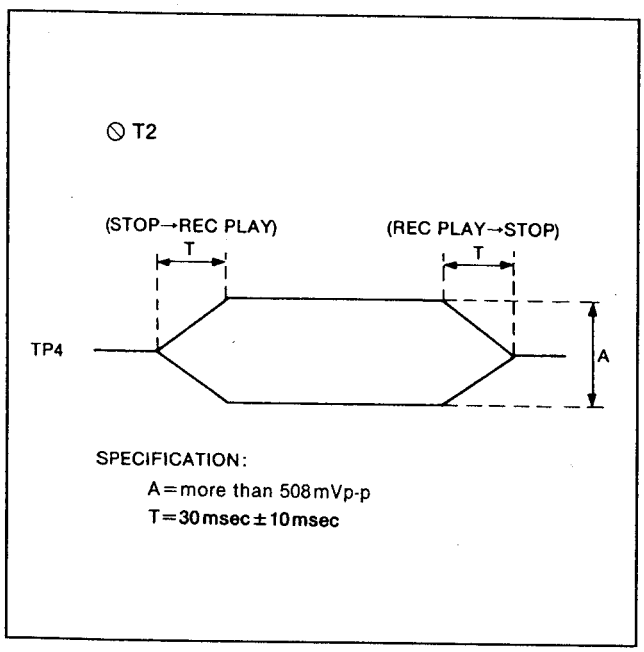

7-4. CUE ERASE CURRENT ADJUSTMENT (S3 : CUE AUDIO)

SPEC	TP5 : more than 508mVpp, T = 30msec ± 10msec
TEST	TP5[G2]
MODE	INSERT REC ↔ PLAY (CUE ON)
TAPE	PRE-RECORDED TAPE
M.EQ	OSCILLOSCOPE
INPUT	
ADJ.	T3[G1]

<STEP 1>
1. SCOPE : TP5
2. Place the unit in INSERT CUE REC mode.
3. Adjust T3 so that the signal level A is maximum.
4. Confirm that it level A is more than 508mVp-p as shown in Figure.

<STEP 2>
1. Place the unit moving to INSERT REC from play and moving to play from INSERT REC mode.
2. Confirm that the rising and falling period of the waveform is 30ms ± 10ms as shown in Figure.

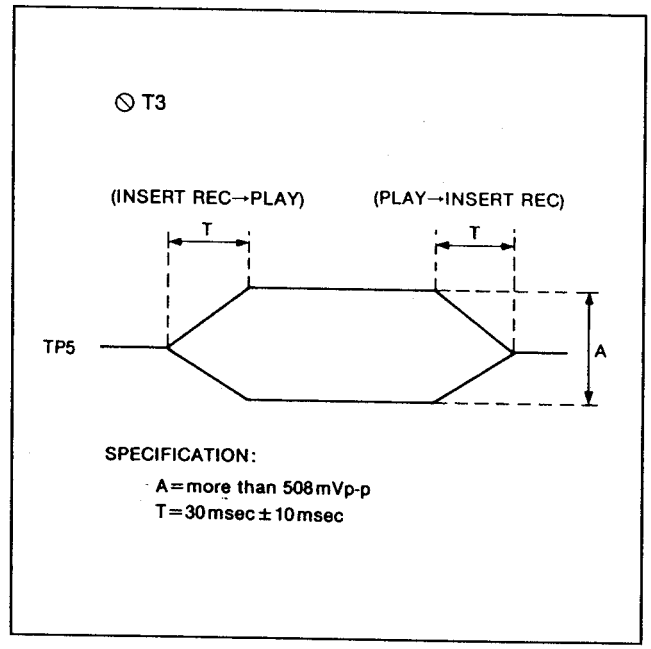

7-5. T/C ERASE CURRENT ADJUSTMENT (S3 : CUE AUDIO)

SPEC	TP6 : more than 508mVpp, T = 30msec ± 10msec
TEST	TP6 (T/C ERASE)[F2]
MODE	INSERT REC. ASSEMBLE REC ASSEMBLE REC ↔ PLAY
TAPE	PRE-RECORDED TAPE
M.EQ	OSCILLOSCOPE
INPUT	
ADJ.	T4 (T/C ERASE)[F1]

<STEP 1>
MENU CONDITION
MAN - EDIT MENU INSERT "ON"
Select the TC F10 to "ON".

<STEP 2>
1. SCOPE : TP6
2. Place the unit in INSERT REC mode.
3. Adjust T4 so that the signal level A is maximum.
4. Confirm that it level A is more than 508mVp-p as shown in Figure.

<STEP 3>
1. Place the unit in ASSEMBLE RECORDING mode.
2. Confirm that the signal level A is more than 508mVp-p.
3. If it is not, Adjust T4 so that the level A is more than 508mVp-p as shown in Figure.

<STEP 4>
1. Place the unit moving in ASSEMBLE RECORDING mode from PLAYBACK mode and moving in PLAYBACK from ASSEMBLE RECORDING mode.
2. Confirm that the rising and falling period of the waveform is 30msec ± 10msec as shown in Figure.

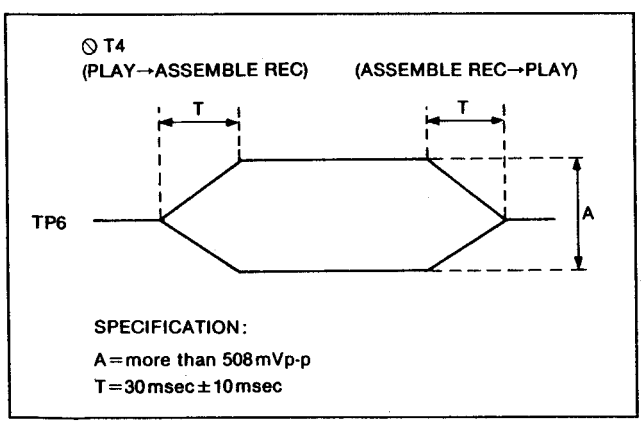

7-6. CTL ERASE CURRENT ADJUSTMENT (S3 : CUE AUDIO)

SPEC	TP7 = more than 508mVpp, T = 30msec ± 10msec
TEST	TP7[D2]
MODE	ASSEMBLE REC to PLAY, PLAY to ASSEMBLE REC
TAPE	PRE-RECORDED TAPE
M.EQ	OSCILLOSCOPE
INPUT	
ADJ.	T5[D1]

<STEP 1>
MENU CONDITION
MAN - EDIT MENU ASSEMBLE
Select the TC F10 to "OFF". (CTL)

<STEP 2>
1. SCOPE : TP7
2. Place the unit in ASSEMBLE REC mode.
3. Adjust T5 so that the signal level A is maximum.
4. Confirm that level A is more than 508mVp-p as shown in Figure.

<STEP 3>
1. Place the unit in ASSEMBLE RECORDING mode from PLAYBACK mode and moving in PLAYBACK from ASSEMBLE RECORDING mode.
2. Confirm that the rising and falling period of the waveform is 30 ± 10msec as shown in Figure.

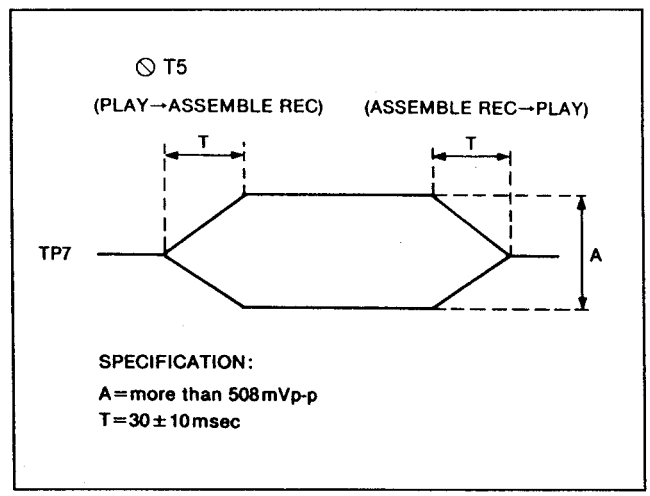

7-7. T/C BIAS & SIGNAL ADJUSTMENT (S3 : CUE AUDIO)

SPEC	TP8 BIAS CURRENT A = 62mVpp ± 3mV SIGNAL CURRENT B = 5mVpp ± 0.2mV
TEST	TP8[I3], TP10[H4], TP11[I4]
MODE	ASSEMBLE REC
TAPE	BLANK TAPE
M.EQ	OSCILLOSCOPE, PROBE 1:1
INPUT	
ADJ.	T6[I2], VR2 (T/C BIAS CURRENT)[I3] VR4 (T/C SIGNAL CURRENT)[G4]

<STEP 1>
MENU CONDITION
MAN - EDIT MENU ASSEMBLE
Select the TC F10 to "ON".

<STEP 2>
1. SCOPE : TP8
2. Place the unit in ASSEMBLE REC mode.
3. Adjust T6 so that the signal level A is maximum.

<STEP 3>
1. SCOPE : TP10, TP11 (probe GND)
2. Place the unit in ASSEMBLE REC mode.
3. Adjust VR2 so that the BIAS CURRENT LEVEL A is 62mVpp ± 3mV as shown in Figure.
4. Adjust VR4 so that the SIGNAL CURRENT LEVEL B is 5mVpp ± 0.2mV as shown in Figure.

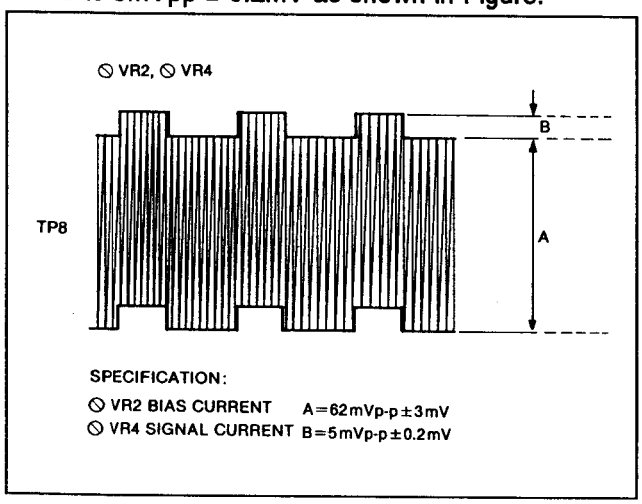

7-8. CUE BIAS CURRENT ADJUSTMENT (1)(S3 : CUE AUDIO)

SPEC	TP9 : MAXIMUM, CUE OUT : MAXIMUM
TEST	TP9[F3], CUE OUT
MODE	REC PLAY, REC PLAY ↔ PLAY
TAPE	BLANK TAPE
M.EQ	OSCILLOSCOPE
INPUT	1kHz 0dBm Sinewave signal to CUE IN
ADJ.	T7[F3], VR3 (CUE BIAS CURR.)[G3]

<STEP 1>
1. SCOPE : TP9
2. Place the unit in REC PLAY mode.
3. Adjust T7 so that the signal level is maximum.

T7 Signal Level = maximum

<STEP 2>
1. SCOPE : CUE OUT
2. Place the unit repeat moving in REC PLAY from PLAYBACK and in PLAYBACK from REC PLAY mode.
3. Adjust VR3 so that the signal level is maximum.

7-9. EE LEVEL ADJUSTMENT (S3 : CUE AUDIO)

SPEC	TP13 : -12dBm ± 0.2dB, CUE OUT : 0dBu ± 0.2dB
TEST	TP13[B3], CUE OUT
MODE	
TAPE	VTVM
M.EQ	1kHz 0dBu Analog Sinewave signal to CUE IN
INPUT	VR6 (EE LEVEL)[B3], VR7 (EE OUT LEVEL)[A3]
ADJ.	

4000 SERIES

<STEP 1>
MACHINE CONDITION
IN/OUT ATT SW (on AUDIO IN/OUT P.C.B) : 0dBm
INPUT IMPEDANCE : HIGH
AUDIO IN MENU : UNITY

<STEP 2>
VTVM : TP13
Adjustment VR : VR6
SPECIFICATION : -12dBm ± 0.2dB

<STEP 3>
VTVM : CUE OUT
Adjustment : VR7
SPECIFICATION : 0dBu ± 0.2dB

7-10. PLAYBACK EQUALIZER ADJUSTMENT (S3 : CUE AUDIO)

SPEC	50Hz ~ 1kHz = -3dB ~ +1.5dB
TEST	TP16 [C3]
MODE	PLAY
TAPE	AUDIO FREQUENCY RESPONSE
M.EQ	VTVM
INPUT	
ADJ.	VR10 (PB EQ)[C1]

<STEP 1>
1. VTVM : TP16
2. Play back the Alignment Tape.
3. Adjust VR10 so that the Playback level is within the specification as shown.

SPECIFICATION:
50Hz ~ 1kHz = -3dB ~ +1.5dB
1kHz ~ 15kHz = ± 1.0dB
(1kHz 0dB Reference)

7-11. PLAYBACK LEVEL ADJUSTMENT (S3 : CUE AUDIO)

SPEC	TP16 = -12dB ± 0.2dB, CUE OUT : 0dBu ± 0.2dB
TEST	TP16[C3], CUE OUT
MODE	PLAY
TAPE	AUDIO LEVEL ALIGNMENT TAPE
M.EQ	VTVM
INPUT	
ADJ.	VR11 (PB LEVEL)[B2], VR12 (PB OUT LEVEL)[C3]

<MACHINE CONDITION>
1. Output ATT : 0dB
2. Audio out Cue : UNITY (MENU)

<STEP 1>
1. VTVM : TP16
2. Playback the Audio Level Alignment Tape.
3. Adjustment VR : VR11

SPECIFICATION : -12dBm ± 0.2dB

<STEP 2>
1. VTVM : CUE OUT
2. Playback the Audio Level Alignment Tape.
3. Adjustment VR : VR12

SPECIFICATION : 0dBu ± 0.2dB

7-12. CUE BIAS CURRENT ADJUSTMENT (2) (S3 : CUE AUDIO)

SPEC	TP16 : -12dBm ± 0.2dB CUE OUT AUDIO DISTORTION IS LESS THAN 3%
TEST	TP16[C3], CUE OUT
MODE	REC PLAY ↔ PLAY
TAPE	BLANK TAPE
M.EQ	VTVM DISTORTION METER
INPUT	1kHz 0dBm, 1kHz +12dBm
ADJ.	VR8[A2]

<STEP 1>
1. VTVM : TP16
2. Supply a 1kHz 0dBm sine wave signal to CUE IN and Record.
3. Playback a just recorded portion.
4. Adjust VR8 so that the CUE BIAS CURRENT LEVEL is -12dBm ± 0.2dB.

TP16
SPECIFICATION : VR8 : -12dBm ± 0.2dB

<STEP 2>
1. DISTORTION METER : CUE OUT
2. Supply a 1kHz +12dBm sinewave signal to CUE IN and Recorded.
3. Playback a just recorded portion.
4. Confirm that the distortion is less than 3%.
5. If it is not adjust VR3 as follow as item 7-11. CUE BIAS CURRENT ADJUSTMENT (1) <STEP 2>.

CUE OUT
SPECIFICATION:
AUDIO DISTORTION : less than 3%

7-13. REC EQUALIZER ADJUSTMENT (S3 : CUE AUDIO)

SPEC	50Hz ~ 1kHz = -3dB ~ +1.5dB 1kHz ~ 15kHz = 1.0dB (1kHz 0dB Reference)
TEST	CUE OUT
MODE	REC PLAY → PLAY
TAPE	BLANK TAPE
M.EQ	VTVM
INPUT	-10dBm 1kHz, SWEEP
ADJ.	VR14 (REC EQ 2)[B2], FL4[A2], VR9[A2]

<STEP 1>

1. VTVM : CUE OUT
2. Supply a difference frequency sinewave as shown below and record.
3. Playback a just recorded portion.
4. Adjust VR14, FL4 and VR9 so that the Playback level is within the specification.

INPUT LEVEL: -10dBm 1kHz (Reference)
-10dBm SWEEP as shown below

SPECIFICATION:
50Hz ~ 1kHz = -3dB ~ +1.5dB
1kHz ~ 15kHz = ± 1.0dB
(1kHz -10dBm Reference)

Adjustable frequency
VR14 and FL4 : 5kHz ~ 12.5kHz
VR9 : 12.5kHz ~ 15kHz

7-14. RECORDING LEVEL ADJUSTMENT (S3 : CUE AUDIO)

SPEC	TP16 : -12dBm ± 0.2dB
TEST	TP16[C3]
MODE	REC PLAY → PLAY
TAPE	BLANK TAPE
M.EQ	VTVM
INPUT	1kHz 0dBmSinewave Signal to CUE IN
ADJ.	VR8[A2]

<STEP 1>

1. VTVM : TP16
2. Supply a 1kHz 0dBu sinewave signal to CUE IN and Record it.
3. Playback a just recorded portion.
4. Adjust VR8 so that the level is -12dBm ± 0.2dB.

SPECIFICATION : -12dBm ± 0.2dB

7-15. CUE METER ADJUSTMENT (S3 : CUE AUDIO)

SPEC	CUE METER -20dB
TEST	CUE METER
MODE	EJECT
TAPE	
M.EQ	
INPUT	1kHz 0dBm Signal to CUE IN
ADJ.	VR13[C4]

<STEP 1>

Note: Before this adjustment, CUE METER OFFSET (item 12-3) is required.

1. Supply a 1kHz 0dBu sinewave signal to CUE IN.
2. Adjust VR13 so that the meter level is -20dB.

7-16. CUE MIX ADJUSTMENT (S3 : CUE AUDIO)

SPEC	0dBm ± 0.5dBm
TEST	CUE OUT
MODE	EJECT
TAPE	
M.EQ	
INPUT	1kHz 0dBm Sinewave Signal to CUE IN
ADJ.	VR5[B4]

<STEP 1>

1. Supply a 1kHz 0dBu sinewave signal to CUE IN.
2. Set the VTR in to the CUE DMIX mode as shown below.

   AUDIO IN → SET UP → CH MIX ON → (CURSOR CENTER) → set the CH-1 S

3. Adjust VR5 so that the cue output level is 0dBm ± 0.5dBm.

8. AT (S4) BOARD MACHINE CONDITION

MACHINE CONDITION

1. Disconnect the P523 on the H.A. REGULATOR (S) P.C.B. which is located at right side of the Mechanism. while adjustment 8-1 through 8-6.
   Connect P523 from adjustment 8-7.

MENU CONDITION
TEST MENU
↓
AT SERVO TEST MENU

Set the each functions as follow.
1. F4: SEARCH = "CENTER"
2. F5: PATTERN = "ENABLE"
3. F8: AT HEIGHT = Ach "0"
   Bch "0"
4. SW2601 [D2] on S4 board is OPEN.
5. Error correction switches on L3 board are all OFF.
6. Error concealment switch on L4 board is OFF.

8-1. ENVELOPE DETECTION ADJUSTMENT (S4 : AT)

SPEC	0.7V ± 0.1VDC, PEAK = +3V ±0.1VDC
TEST	TP2611 (ENV CH1)[D1], TP2612 (ENV CH0)[D1]
MODE	STOP, EJECT, SW2601=OPEN, P523=OFF SEARCH = CENTER, PATTERN = ENEBLE
TAPE	75% COLOR BAR PORTION ALIGNMENT TAPE
M.EQ	OSCILLOSCOPE
INPUT	
ADJ.	VR2601[F2], VR2603[D4], VR2602[F2], VR2604[E4]

<STEP 1>

MENU CONDITION

Refer to the Machine Condition and Menu Condition at the beginning of this SECTION. P523 = OFF

<STEP 2>
1. SCOPE : CH1 TP2611
   SCOPE : CH2 TP2612
2. Set the VTR in EJECT mode.
3. Adjust VR2601 and VR2602 so that the level of waveform is 0.7V ± 0.1 V DC.

<STEP 3>
1. SCOPE : CH1 TP2611
   SCOPE : CH2 TP2612
2. Set the VTR in STOP mode.
3. Rotate the capstan shaft by hand, and set the waveform peak becomes maximum.
4. Adjust VR2603 and VR2604 so that the level of waveform is 3V ± 0.1V DC.
5. Note that VR2601/VR2602/VR2603/VR2604 effect each other.
   Repeat step 2 and 3 and confirm that each adjustment is in specification.

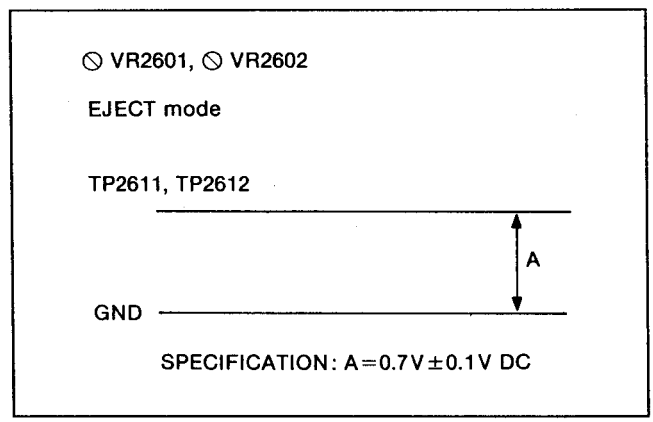

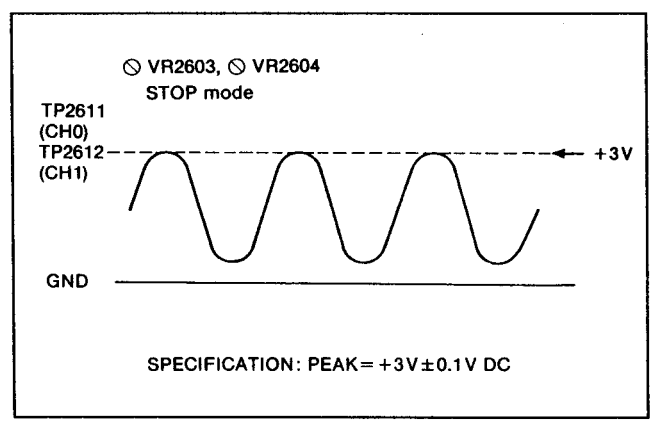

8-2. CONFIRMATION OF GROUP DELAY COMPENSATION CIRCUIT (S4 : AT)

SPEC	REFER TO FIGURE
TEST	TP2621[H3]
MODE	VAR (X-1, STILL, X1, X2, X3), SW2601 = OPEN, P523 = OFF SEARCH = CENTER, PATTERN = ENABLE
TAPE	75% COLOR BAR PORTION ALIGNMENT TAPE
M.EQ	OSCILLOSCOPE
INPUT	
ADJ.	CONFIRMATION ONLY

<STEP 1>
MACHINE CONDITION
Refer to the Machine condition and Menu condition at the beginning of this section.

<STEP 2>
Connect the scope to TP2621

<STEP 3>
Set the VTR VAR X-1, STILL, X1, X2 and X3 and confirm the each DC voltage is shown below.

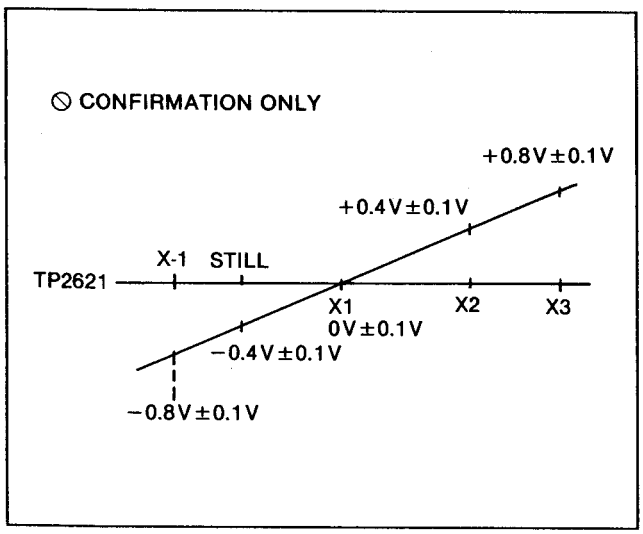

<STEP 4>
The DC level of VAR X3 mode should be stable more than 20 sec.

8-3. D/A CONVERTER FULL SCALE ADJUSTMENT (S4 : AT)

SPEC	5.0V ± 0.1VDC
TEST	TP2606 [B1], TP2607 [B2]
MODE	EJECT SW2601-OPEN, P523-OFF, SEARCH-CENTER, PATTERN-FIX
TAPE	
M.EQ	OSCILLOSCOPE
INPUT	
ADJ.	VR2613 (DA1FS)[B2], VR2614 (DA2FS)[B2]

<STEP 1>
MACHINE CONDITION
1. Set the VTR in EJECT mode.
2. Set the AT mode to SEARCH = CENTER and PATTERN = FIX in the AT TEST Menu.

<STEP 2>
1. SCOPE CH1 : TP2606
   SCOPE CH2 : TP2607
2. Adjust VR2613 and VR2614 so that the voltage at TP2606 and TP2607 are +5V ± 0.1V DC.
3. Adjust VR2613 and VR2614 so that the difference voltage between TP2606 and TP2607 are within 0.05V. If the both voltage at TP2606 and TP2607 are 5.0V DC, then it is OK. If the one of the voltage is 4.9V adjust the other level is same level.
4. Note that the VR2613 and VR2614 effect each other.

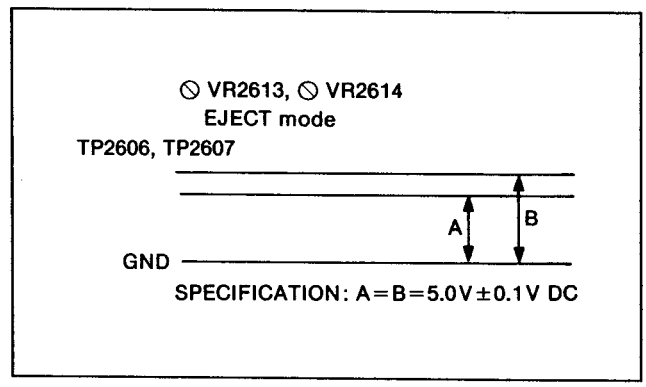

8-4. D/A CONVERTER OFFSET ADJUSTMENT (S4 : AT)

SPEC	TP2606 = TP2607 = 0V ± 0.05V DC
TEST	TP2606[B1], TP2607[B2], TP2623[D1], TP2624[E1], TP2619[E1] ... TRIGGER
MODE	VAR X1, SW2601 = OPEN, P523 = OFF SEARCH = CENTER, PATTERN = FIX
TAPE	75% COLOR BAR PORTION ALIGNMENT TAPE
M.EQ	OSCILLOSCOPE
INPUT	
ADJ.	VR2615 (DA10S)[B2], VR2616 (DA20S)[B2]

<STEP 1>
MACHINE CONDITION
1. Set the AT mode to SEARCH = CENTER and PATTERN = FIX in the AT TEST Menu.
2. Set the VTR in VAR X1 mode.

<STEP 2>
1. SCOPE CH1 : TP2606
   CH2 : TP2607
2. Adjust VR2615 and VR2616 so that their voltage are 0V ± 0.05V DC.

<STEP 3>
1. SCOPE CH1 : TP2623
   CH2 : TP2624
2. Confirm the waveform center is flat.

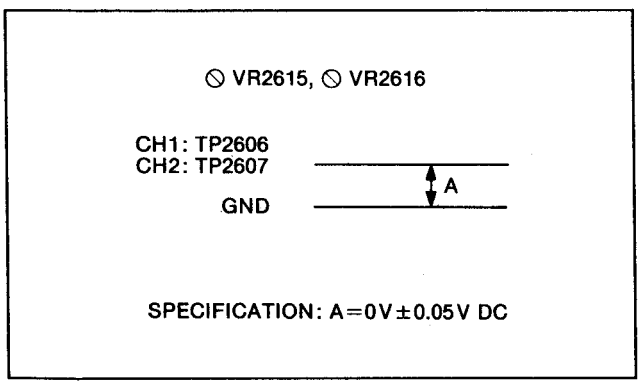

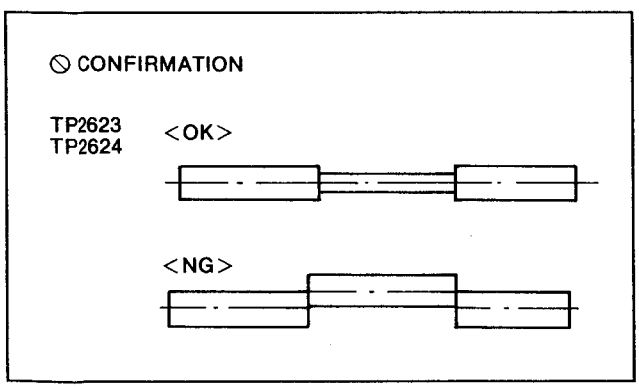

8-5. OPEN GAIN ADJUSTMENT (S4 : AT)

SPEC	TP2627 = TP2628 = 4.0Vpp ± 0.2Vp-p
TEST	TP2627[I1], TP2628[I1]
MODE	VAR, SPEED : FRAME STILL, SW2601 = OPEN, P523 = OFF STRN = OPEN, SEARCH = CENTER, PATTERN = ENABLE
TAPE	75% COLOR BAR PORTION ALIGNMENT TAPE
M.EQ	OSCILLOSCOPE
INPUT	
ADJ.	VR2607[F1], VR2608[G1]

<STEP 1>
MACHINE CONDITION

<STEP 2>
MENU CONDITION
Refer to the Machine Condition and Menu Condition at the beginning of this SECTION.

<STEP 3>
1. SCOPE : TP2627
2. Playback a 75% color bar portion of the Alignment Tape on FRAME STILL mode.
3. Adjust VR2607 so that the waveform level A is 4.0Vpp ± 0.2Vp-p as shown in Figure.

<STEP 4>
1. SCOPE : TP2628
2. Playback a 75% color bar portion of the Alignment Tape on FRAME STILL mode.
3. Adjust VR2608 so that the waveform level A is 4.0Vpp ± 0.2Vp-p as shown in Figure.

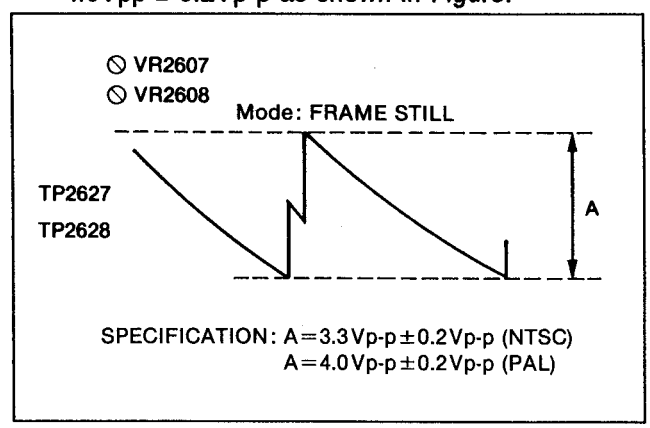

8-6. DRIVE WAVEFORM CONFIRMATION (S4 : AT)

SPEC	REFER TO FIGURE
TEST	TP5006, TP5007 (HEAD AMP REGURATOR BOARD)
MODE	VAR X3,VAR X-1,SW2601=OPEN,P523=OFF SEARCH = CENTER, PATTERN = ENABLE
TAPE	75% COLOR BAR PORTION ALIGNMENT TAPE
M.EQ	OSCILLOSCOPE
INPUT	
ADJ.	CONFIRMATION ONLY

<STEP 1>
MACHINE CONDITION
Set the Machine condition as shown in the first page of this section.

<STEP 2>
1. SCOPE CH1 : TP5006
   CH2 : TP5007 on H.A.REGURATOR BOARD
   The H.A.REGURATOR BOARD is located at right side of mechanism.
2. Set the VTR in VAR X3 mode and confirm the drive voltage is as shown below.

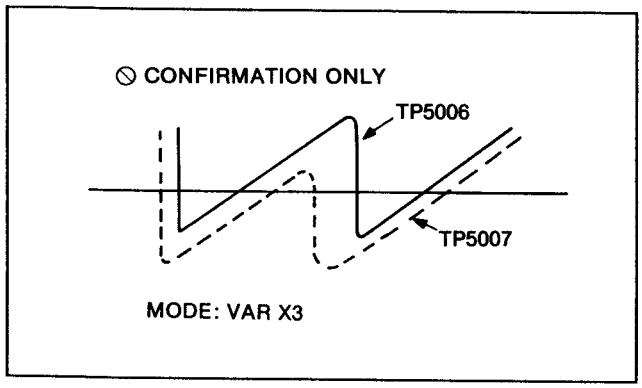

3. Set the VTR in VAR X-1 mode and confirm the drive voltage is as shown below.

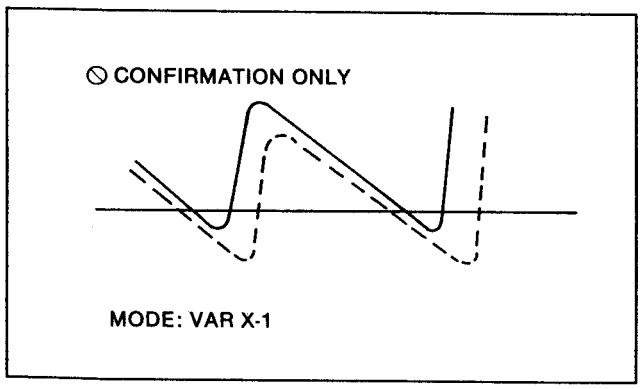

4. Turns power off and connect P523.

8-7. STRAIN SENSOR OUTPUT ADJUSTMENT (A CH) (S4 : AT)

SPEC	REFER TO FIGURE
TEST	TP2627[I1], TP2629[G1] TP2619[E1] ... TRIGGER
MODE	VAR FIELD STILL,SW2601=OPEN,P523=ON SEARCH = CENTER, PATTERN = ENABLE
TAPE	75% COLOR BAR PORTION ALIGNMENT TAPE
M.EQ	OSCILLOSCOPE (DC mode)
INPUT	
ADJ.	VR2609 (STR OS A)[G1]

<STEP 1>
1. Confirm the P523 is connected.
2. Set the AT mode SEARCH = CENTER and PATTERN = ENEBLE by AT TEST Menu.

<STEP 2>
1. Press VAR button and set the speed to STILL (FIELD STILL).
2. SCOPE CH1 : TP2627
   CH2 : TP2629
   TRIGGER : TP2619

<STEP 3>
1. Rotate the capstan shaft by hand and set the waveform of TP2627 crosses to GND at center of the slope.
2. Adjust VR2609 so that the TP2629 and TP2627 waveform crosses to GND at their center of the waveform.

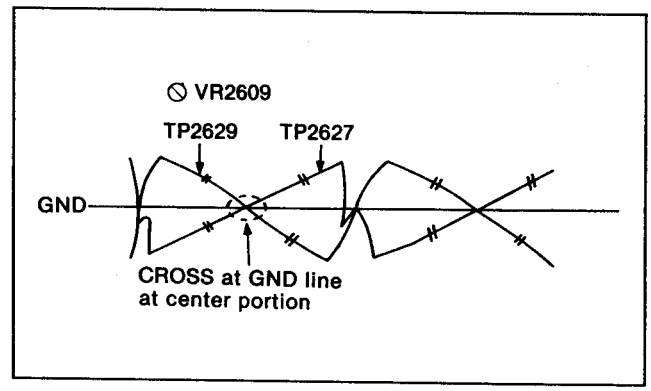

8-8. STRAIN SENSOR OUTPUT ADJUSTMENT (B CH) (S4 : AT)

SPEC	REFER TO FIGURE
TEST	TP2628[I1], TP2630[H1] TP2619[E1] ... TRIGGER
MODE	VAR FIELD STILL,SW2601=OPEN,P523=ON SEARCH = CENTER, PATTERN = ENABLE
TAPE	75% COLOR BAR PORTION ALIGNMENT TAPE
M.EQ	OSCILLOSCOPE (DC mode)
INPUT	
ADJ.	VR2610 (STR OS B)[H1]

<STEP 1>
1. Confirm the P523 is connected.
2. Set the AT mode SEARCH = CENTER and PATTERN = ENEBLE by AT TEST Menu.

<STEP 2>
1. Press VAR button and set the speed to STILL (FIELD STILL).
2. SCOPE CH1 : TP2628
   CH2 : TP2630
   TRIGGER : TP2619

<STEP 3>
1. Rotate the capstan shaft by hand and set the waveform of TP2628 crosses to GND at center of the slope.
2. Adjust VR2610 so that the TP2630 and TP2628 waveform crosses to GND at their center of the waveform.

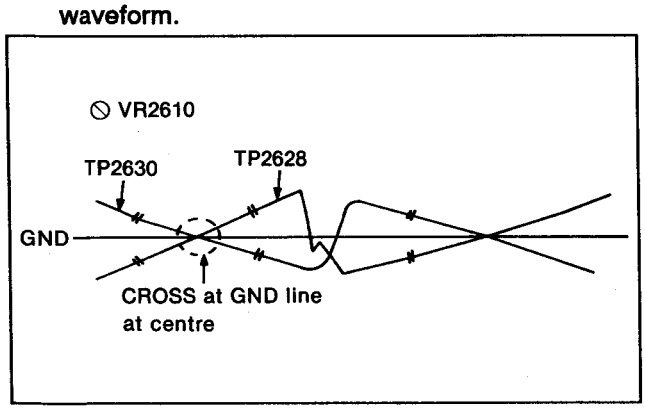

8-9. STRAIN SENSOR GAIN ADJUSTMENT (S4 : AT)

SPEC	TP2630 = TP2629 = 4.0Vpp ± 0.5V
TEST	TP2629[G1], TP2630[H1]
MODE	JOG, SPEED : FRAME STILL, SW2601 = OPEN, P523 = ON SEARCH = CENTER, PATTERN = ENABLE
TAPE	75% COLOR BAR PORTION ALIGNMENT TAPE
M.EQ	OSCILLOSCOPE
INPUT	
ADJ.	VR2611[G1], VR2612[G1]

Connect P523

<STEP 1>
MENU CONDITION
Refer to the Machine Condition and Menu Condition at the beginning of this SECTION. Do not remove P523.

<STEP 2>
1. SCOPE : TP2629
2. Playback a 75% color bar portion of the Alignment Tape in FRAME STILL mode.
3. Adjust VR2611 so that the waveform level A is 4.0Vpp ± 0.5V as shown in Figure.

<STEP 3>
1. SCOPE : TP2630
2. Playback a 75% color bar portion of the Alignment Tape on FRAME STILL mode.
3. Adjust VR2612 so that the waveform level A is 4.0Vpp ± 0.5V as shown in Figure.

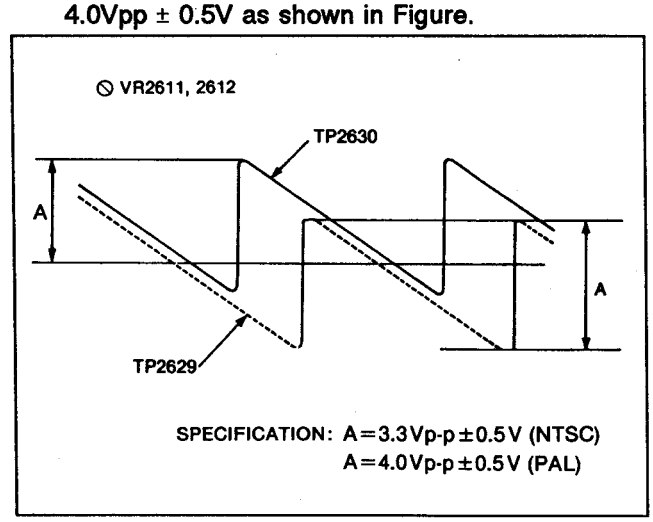

8-10. AT HEIGHT (1) ADJUSTMENT (S4 : AT)

SPEC	TP2619 PULSE IS LOCATED AS SHOWN IN FIGURE
TEST	TP2610[F1], TP2619[F1], TP5006[C2], TP5007 (H.A REGULATOR S)[C1] TP2606, TP2607
MODE	VAR×1, SW2601=OPEN, P523-ON, SEARCH=CENTER, PATTERN=ENABLE
TAPE	75% COLOR BAR PORTION ALIGNMENT TAPE
M.EQ	OSCILLOSCOPE
INPUT	
ADJ.	VR2605[F1], VR2606[F1]

<STEP 1>
SCOPE CH1 : TP2610 Segment Pattern
SCOPE CH2 : TP2619 Pulse
SCOPE CH3 : TP5006 Drive Voltage
SCOPE CH4 : TP5007 Drive Voltage

<STEP 2>
1. Field or Frame Still Option (Setup/Home/AT Play)
2. Center/Enable (Test/Servo/AT)
3. SW2601 open
4. Variable X1 Playback
5. 75% Color Bar Alignment tape, shuffling ON
6. Zero the AT Head Heights from the front panel. (Height ON/ BS with F9/left & right cursors, with the front panel knob).

<STEP 3>
1. Initially, adjust the deflection pattern voltages at TP5006 & 5007 are 0 volts DC by VR2605 & VR2606 during VAR X1 playback. This centers the AT heads.
2. Next, fine adjust these pots to achieve three conditions
   A). Proper rising stairstep and pulse timing at TP2610 & 2619. (The stairs are rising from left to right, there are 6 or 8 steps (for NTSC or PAL), and the pulse is aligned with the highest step.
   B). Maximum RF on the 4 "Envelope" bar graphs on the Test/Servo/AT screen.
   C). The segment LED D609 on the AT board should be off.
3. The drive voltage at TP5006 & 5007 will have changed, but they should still be within the range of zero volts, plus or minus fifty volts.
4. Note the voltages at TP5006 & 5007 for use in subsequent adjustments.

Note:
1. In this adjustment if output drive voltage waveforms (TP5006 and TP5007) are not flat like a pulse. VR2613 and VR2614 adjustments are required as shown in Figure.

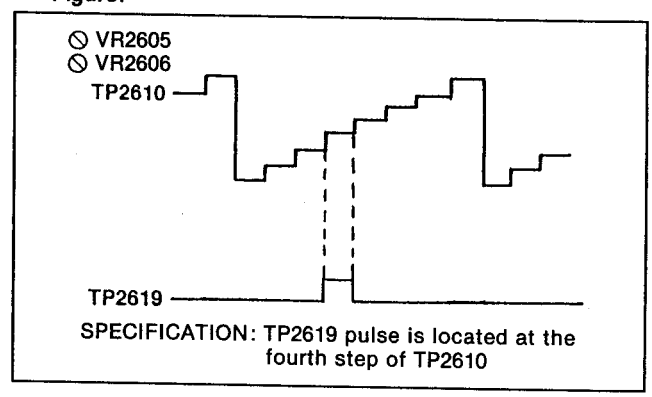

2. Place the unit in VAR × 1 mode.
3. Adjust VR2613 and VR2614 so that the output waveform are flat as shown in Figure.
4. Confirm that the voltage at TP2606 and TP2607 are +5V ± 0.1VDC. (8-3. D/A CONVERTER FULL SCALE ADJUSTMENT)

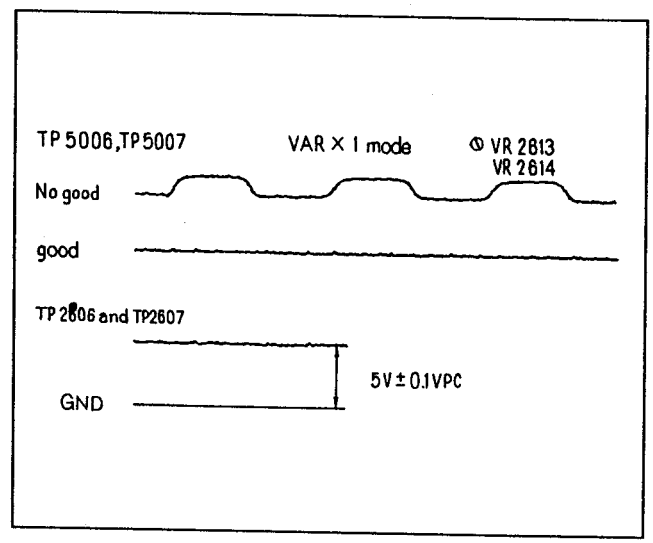

8-11. AT HEIGHT (2) ADJUSTMENT (S4 : AT)

SPEC	TP2619 PULSE IS LOCATED AT PEAK OF TP2610
TEST	TP2610[F1],TP2619(TRIGGER)[E1], TP5006[C2],TP5007(H.A REGULATOR S)[C1] TP2629,TP2630
MODE	VAR, SW2601-CLOSE, P523-ON, SEARCH = CENTER,PATTERN= ENABLE
TAPE	75% COLOR BAR PORTION ALIGNMENT TAPE
M.EQ	OSCILLOSCOPE
INPUT	
ADJ.	VR2609(STR OS A)[G1], VR2610(STR OS

This adjustment will be done in the open loop and closed loop modes.

<STEP 1>

OPEN LOOP MODE

1. 75% color bar alignment tape
2. SW2601 OPEN
3. AT menu Screen Options; CENTER/ENABLE
4. Variable X1 playback

<STEP 2>

1. SCOPE CH1 : TP2629
   SCOPE CH2 : TP2630
   (Strain Offset pots)
   VR2609
   VR2610
   (Strain Offset pots)

<STEP 3>

1. Adjust VR2609 &2610 ("STROSA" & "STROSB") for 0 volts at TP2629 & 2630.

CLOSED LOOP MODE

<STEP 4>

1. Close the strain loop with SW2601.
2. Continue in Variable X1 playback.
3. While monitoring TP5006 & 5007, adjust the Strain Offsets VR2609 & 2610 for the voltages noted at in step (8-10).

<STEP 5>

1. Now, fine adjust VR2609 & 2610 for three conditions;
   A). Proper rising stairstep and pulse timing at TP2610 & 2619. (The stairs are rising from left to right, there are 6 or 8 steps (for NTSC or PAL), and the pulse is aligned with the fourth step.
   B). Maximum RF on the 4 "envelope" bar graphs on the Test/Servo/AT screen.
   C). Zero volts plus or minus 50 volts at test points 5006 & 5007.

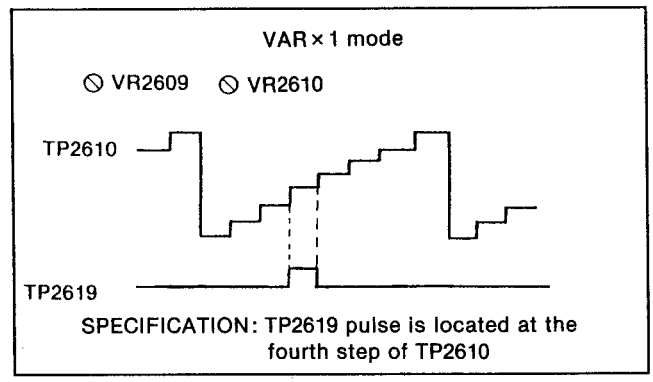

SPECIFICATION: TP2619 pulse is located at the fourth step of TP2610

<STEP 6>

Repeat section 8-10, 8-11 until front panel envelope does not change when SW2601 is opened and closed.

8-12. GAIN ADJUSTMENT (S4 : AT)

SPEC	REFER TO FIGURE
TEST	TP2611[D1], TP2612[D1], TP2610[F1], TP2619(TRIGGER)[E1], TP5006[C2], TP5007[C1], TP8(S1), TP8(S2), TP207 on REC Amp
MODE	VAR×1, FRAME STILL, SW2601 = CLOSE, H.A REGULATOR, P523 = ON, SEARCH = CENTER, PATTERN = ENABLE
TAPE	75% COLOR BAR PORTION ALIGNMENT TAPE
M.EQ	OSCILLOSCOPE
INPUT	
ADJ.	VR2611[G1], VR2612[H1]

<STEP 1>

1. AT Play "Frame" option on the SET UP/HOME screen or TEST/SERVO/AT screen.
2. CENTER/ENABLE on the Test/Servo/AT screen.
3. Color bar tape.
4. Place the unit to STILL mode.
5. Set the AT head heights to zero from the front panel.

<STEP 2>

1. SCOPE CH1 : TP2610 Segment Pattern
   SCOPE CH2 : TP2619 Pulse
   VR2611 "STRGNA"
   VR2612 "STRGNB"

<STEP 3>

1. Adjust VR2611 & 2612 for Maximum RF level on the "envelope" bar graphs on the front panel while maintaining the proper timing relationship between the pulse and Segment waveforms, at the fourth step.
2. As a rough check, the voltage in the play mode should be approximately 0 volts at TP5006 & 5007, and the segment LED should be off.

<STEP 4>

1. Next, fine adjust the circuit as follows;
2. AT Play "Frame" on the SETUP/HOME screen or TEST/SERVO/AT screen.
3. CLOSE/CENTER/ENABLE
4. SW2601 CLOSED
5. Variable STILL mode (not play Still).

<STEP 5>

1. SCOPE CH1 : TP8 on the S1 board
   SCOPE CH2 : TP8 on the S2 board
   TP207 for triggering
   (on the REC Amp Board).
2. Fine adjust VR2611 & 2612 for flatness in the detected envelope, and maximum envelope level on the front panel meter.

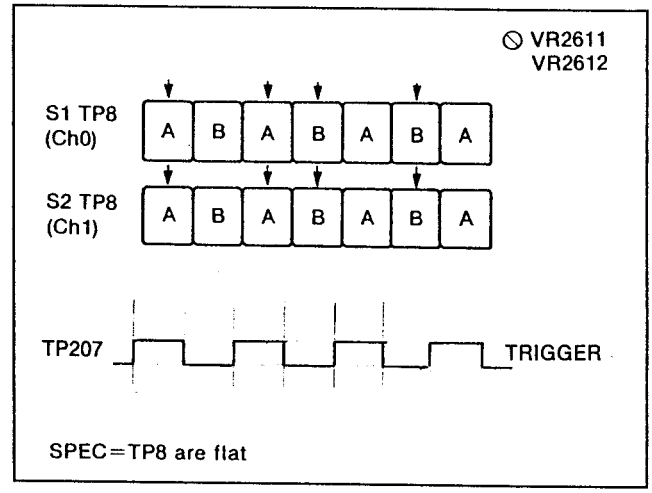

Note:

1. If output waveform of TP8 is not clear, connect the scope to CH1 to TP2611 and CH2 to TP2612 on the AT board.
2. Confirm that output DC level is flat.

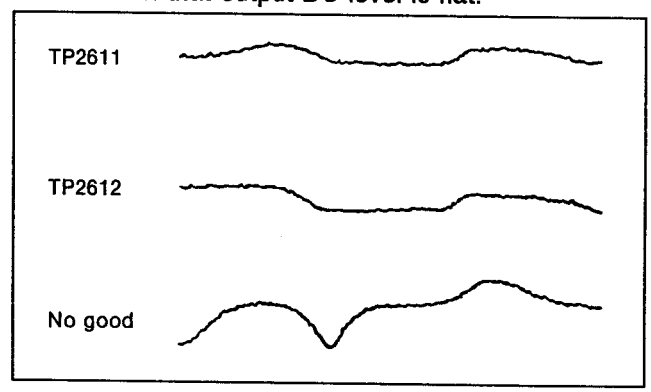

8-13. STRAIN LOOP FREQUENCY RESPONSE ADJUSTMENT (S4 : AT)

SPEC	REFER TO FIGURE
TEST	TP2629[G1] --- A CH WFM OUT TP2630[H1] --- B CH (ENVELOPE) TP2619[E1] --- (H SW) TRIGGER,
MODE	VAR X1, -X1, SW2601=CLOSE, SEARCH=CENTER=PATTERN=ENABLE
TAPE	75% COLOR BAR PORTION ALIGNMENT TAPE
M.EQ	OSCILLOSCOPE
INPUT	Composite color bar to VIDEO IN
ADJ.	VR2619(TWN A)[H2], VR2621(LGN A)[H2] - A CH VR2620(TWN B)[H2], VR2622(LGN B)[H2] - B CH

<STEP 1>
1. SCOPE CH1 : WFM OUT (ENV pattern)
   CH2 : TP2619 (TRIG)
2. Set the each VRS as follows.
   VR2619, VR2620 : center position.
   VR2621, VR2622 : fully counterclockwise

<STEP 2>
1. Place the unit to VAR ×1 mode.
2. Set the AT height on the test menu to 1/3 level decrease (off track) from maximum envelope.
3. Slowly turn VR2619 and VR2620 to clockwise until output envelope waving is increase.
4. Adjust VR2619 and VR2620 to counterclockwise so that the output envelope waving is minimum.
5. Confirm that the SEGM lamp is OFF.
6. After confirmation, set the AT HEIGHT to 0.
7. Set the VR2621 and VR2622 to fully clockwise.

Note: Adjust each head (A, B) independently.

<STEP 3>
1. Scope CH1 : WFM OUT (ENV pattern)
   CH2 : TP2629, TP2630
   CH3 : TP2619 (TRIG)
2. Place the unit to VAR-X1 and VAR-X3.

<STEP 4>
1. Set the AT height on the test menu to 1/3 level decrease (off track) from maximum envelope.
2. Adjust VR2621 and VR2622 so that the droop of entrance side of output envelope is same level between a and b.

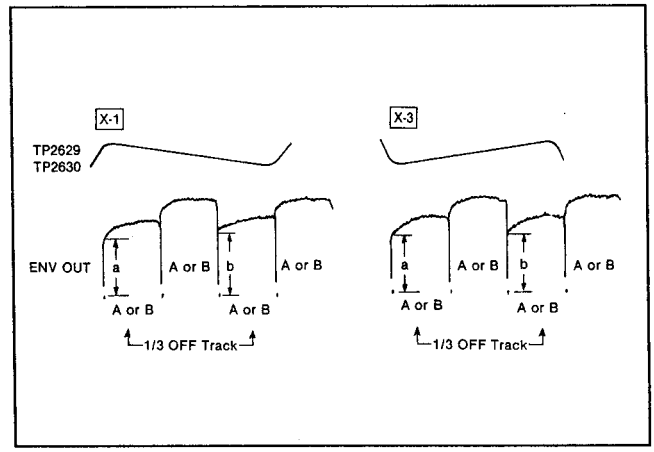

<STEP 5>
1. Confirm that the SEGM lamp is OFF.
2. After confirmation, set the AT HEIGHT to 0.

Note: Adjust each head (A, B) independently.

8-14. GROUP DELAY COMPENSATION ADJUSTMENT (S4 : AT)

SPEC	REFER TO FIGURE
TEST	TP8[E2]→S1, TP8[E2]→S2, TP631[H2]→S4 TP632[I3] → S4
MODE	VAR × -1, × 3 → VAR ×1 ~ ×-3
TAPE	75% COLOR BAR PORTION ALIGNMENT TAPE
M.EQ	OSCILLOSCOPE
INPUT	
ADJ.	VR2617[D1], VR2618[E1]

<STEP 1>
1. AT Play Frame or Field.
2. SCOPE CH1 : TP8 on the S1 board.
   SCOPE CH2 : TP8 on the S2 board.
   SCOPE CH3 : TP2631
   SCOPE CH4 : TP2632
3. Use the knob to activate the variable times 3 and variable times -1 modes, alternately.

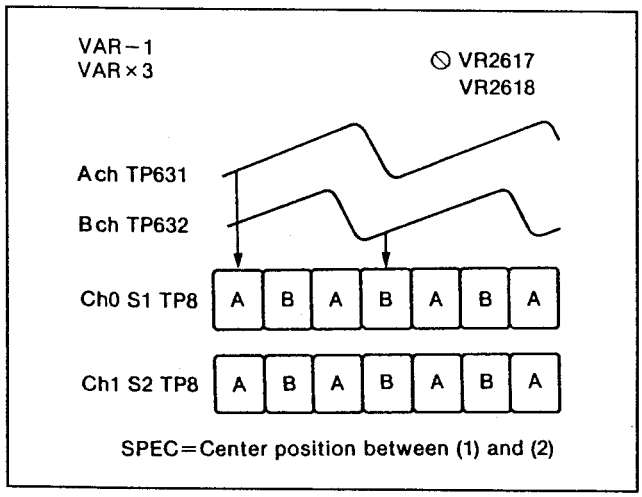

4. Confirm that the output waveform is flat as shown in figure.
5. If it is not, adjust VR2617 and VR2618.

8-15. PRE READ CONFIRMATION (S4 : AT)

SPEC	REFER TO FIGURE
TEST	TP2610[F1], TP2619[E1]
MODE	EDIT PLAY, SW2601-CLOSE, P523-ON AT TEST = NORMAL, PRE READ MODE
TAPE	75% COLOR BAR PORTION ALIGNMENT TAPE
M.EQ	OSCILLOSCOPE
INPUT	
ADJ.	CONFIRMATION ONLY

<STEP 1>
SCOPE CH1 : TP2610
SCOPE CH2 : TP2619

<STEP 2>
1. Set preread mode as follows.

   HOME MENU → F + F8 (PRE READ ON) →
   MANUAL EDIT MENU → F12 INSERT
2. Playback the alignment tape.

<STEP 3>
Confirm the pulse at TP2619 is located at 4TH (PAL), 3RD (NTSC) steps of TP2610 as shown below.

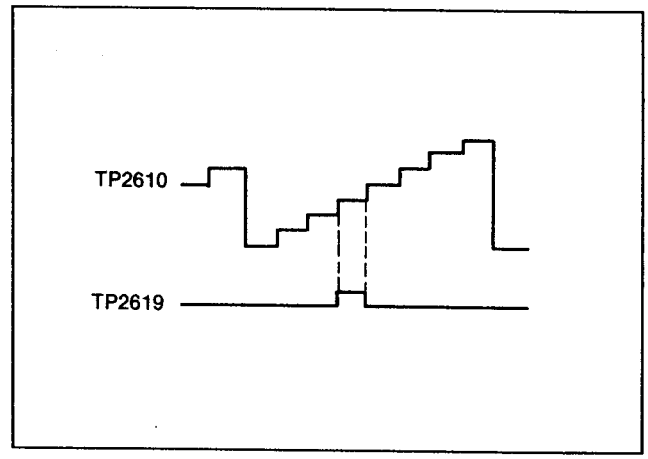

8-16. CONFIDENCE PB CONFIRMATION (S4 : AT)

SPEC	REFER TO FIGURE
TEST	TP2610[F1], TP2619[E1]
MODE	CONFIDENCE PB HOME MODE, SW2601=CLOSE
TAPE	BLANK TAPE
M.EQ	OSCILLOSCOPE
INPUT	
ADJ.	CONFIRMATION ONLY

<STEP 1>
SCOPE CH1 : TP2610
SCOPE CH2 : TP2619

<STEP 2>
Confirm the pulse at TP2619 is located at Second steps of TP2610 as shown below.

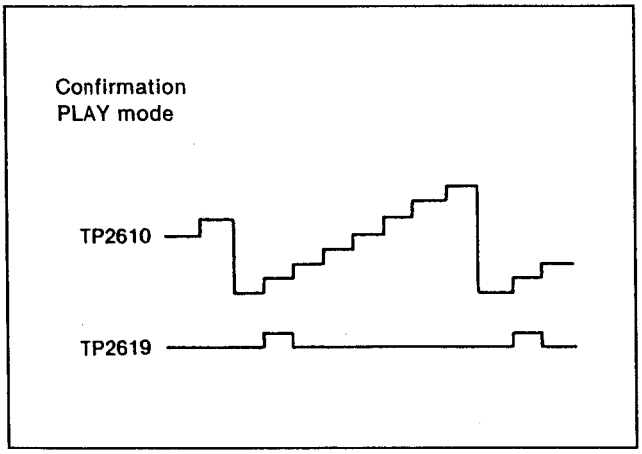

FINAL CONFIRMATION OF AT ADJUSTMNET

SPEC	TP2619 PULSE IS LOCATED AS SHWON IN FIGURE
TEST	TP2611[D1], TP2612[D1], TP2610[F1], TP2619(TRIGGER)[E1], TP5006, TP5007 (H.A REGULATOR)
MODE	VAR, FRAME STILL, SW2601 = CLOSE, P523 = ON SEARCH = CENTER, PATTERN = ENABLE
TAPE	75% COLOR BAR POSITION ALIGNMENT TAPE
M.EQ	OSCILLOSCOPE
INPUT	
ADJ.	VR2609 (STR OS A),VR2610 (STR OS B)[H1] VR2611[G1], VR2612[H1]

<STEP 1>
MACHINE CONDITION
1. VAR X1, P523 = ON, SW2601 = CLOSE
2. Set the AT mode, SEARCH = CENTER, PATTERN = ENABLE
3. Set the AT HEIGHT on the front panel, both A CH and B CH are 0.

<STEP 2>
1. SCOPE CH1 : TP2610
   CH2 : TP2619
   CH3 : TP5006
   (H.A REGULATOR Board)
   CH4 : TP5007
   (H.A REGULRATOR Board)
2. Confirm the waveform is as shown in Figure.
   If it is not, adjust VR2609 and VR2610.
3. Confirm that the DC voltage is 0 ± 50V DC.
4. Confirm that the envelope output is maximum on the front display.
5. If it is not Readjust VR2609 and VR2610. (Refer to item 8-11 AT HEIGHT (2) ADJUSTMENT)

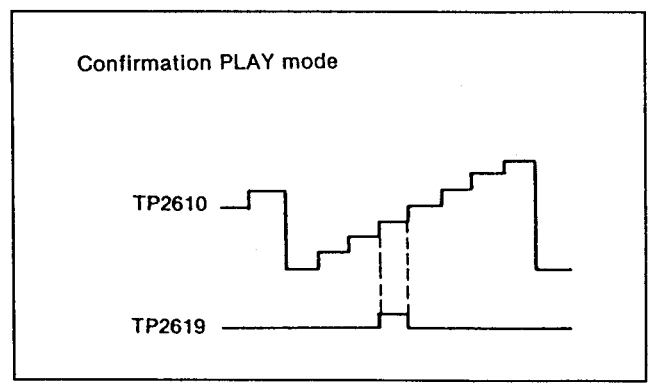

<STEP 3>

1. Set the AT mode to NORMAL (F1).
2. Place the unit in the PLAY mode.
3. Confirm the waveform is as shown in figure.

<STEP 4>

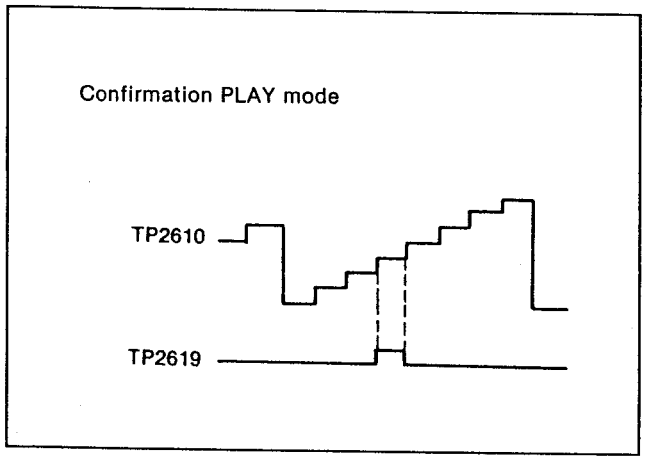

1. Place the unit in the Recording mode.
2. Confirm the waveform is as shown in figure.

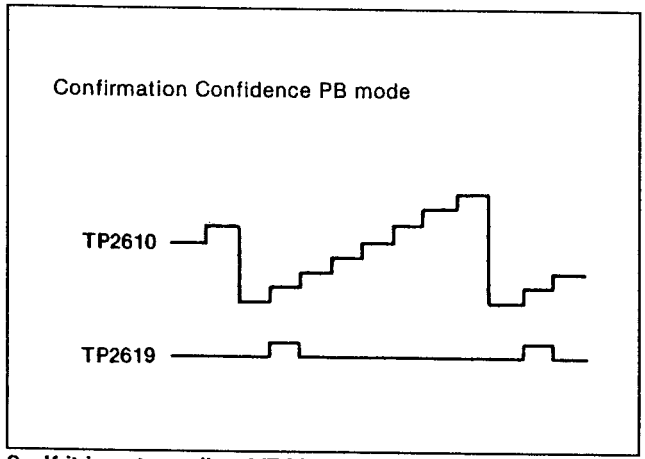

3. If it is not, readjust VR2609 and VR2610. (Refer to item 8-11 AT HEIGHT (2) adjustment)

NOTE: If the segment steps is mached the pulse and segment, Segment LED is OFF.

<STEP 5>

1. SCOPE CH1 : TP8 (S1) on the Equalizer Board.
   CH2 : TP8 (S2) on the Equalizer Board.
   CH3 : TP37 (S5) on the SERVO Board. (for trigger)
2. Confirm that the envelope is flat from VAR X-1 to VAR X3. And check the CH A and CH B envelope output balance.

Note: If the envelope drop off at entrance side and exit side, in this case re-check the tape pass linearity. (Refer to P3 or P6 Height adjustment)

3. If it is not, readjust VR2611 and VR2612. (Refer to item 8-15 GAIN adjustment)

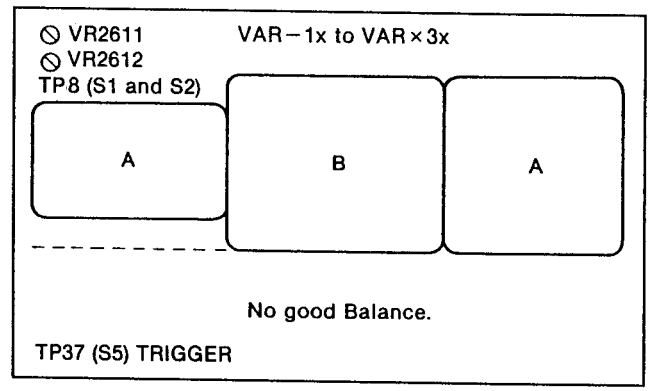

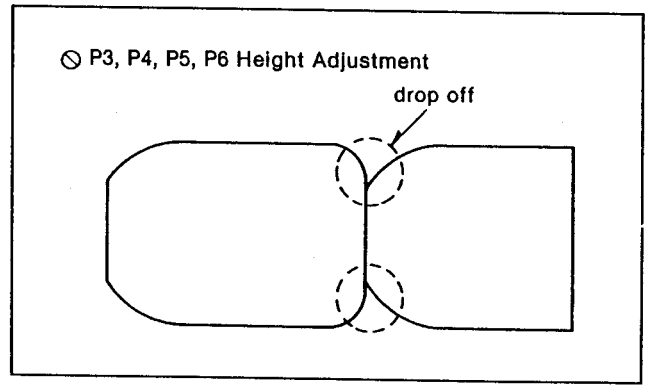

9. SERVO (S5) BOARD

9-1. CAPSTAN FG AMP ADJUSTMENT (S5 : SERVO)

SPEC	FG DC BIAS = 6.0V ± 0.2V DC
TEST	P2210-14C[D5], P2210-16C[D5], TP14[F4], TP17[C4]
MODE	EE1 (EJECT)
TAPE	
M.EQ	OSCILLOSCOPE DC mode
INPUT	
ADJ.	VR1[I4], VR2[I4]

<STEP 1>

1. SCOPE : P2210-14C
2. Turn the capstan Motor by hand.
3. Adjust VR1 so that the center of CAP FG level A is 6.0V ± 0.2V DC as shown in Figure.

<STEP 2>

1. SCOPE : P2210-16C
2. Turn the capstan Motor by hand.
3. Adjust VR2 so that the center of CAP FG level A is 6.0V ± 0.2V DC as shown in Figure.

<STEP 3>

1. SCOPE CH1 : TP14
   CH2 : TP17
2. Turn the capstan Motor by hand.
3. Confirm that the pulse is appeard on the scope.

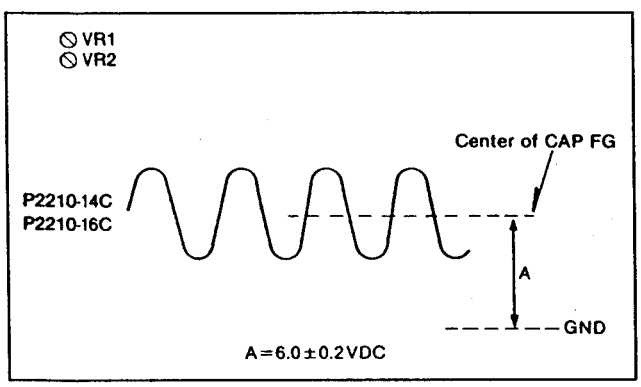

9-2. TAKE UP REEL TORQUE ADJUSTMENT (S5 : SERVO)

SPEC	T REEL TORQUE = 53gr.cm ± 5gr.cm
TEST	TAKE UP REEL
MODE	TAPE LOADING COMPLETION WITHOUT CASSETTE TEST MECH, NO FRLD
TAPE	SELF-RECORDING TAPE
M.EQ	DIAL TORQUE GAUGE(150g max.) --- VFK71 DIAL TORQUE GAUGE ADAPTOR--VFK0134 TENTELO METER --- VFK0132
INPUT	
ADJ.	FRONT PANEL ADJUSTMENT VR

<STEP 1>

1. Remove the cassette compartment.
2. Set the service switch SW1-4 ON and turn the power ON.
3. Attach the Dial Torque Gauge Adaptor with the Dial Torquen Gauge and set the Dial Torque Gauge on the Gake Up Reel Motor.
4. Set the VTR into test mode.

   TEST → SERVO → REEL → MEASURE → S.T

5. Place the unit in the STOP mode.
6. Place the unit into the Take Up Reel Torque Adjustment mode as shown below.

   TEST → SERVO → REEL → F+F3

7. Adjust Front Panel adjustment VR so that the Take Up Reel Torque is within specification.

   SPECIFICATION = 5.gr.cm ± 5gr.cm

<STEP 2>

1. Insert a self recording tape.
2. Set the VTR into recording mode.
3. Adjust Take up Reel Torque so that the tension is within specification.

   SPECIFICATION : 30gr.cm ± 5gr.cm

SPEC	1	2	3	4	5	6
Factory Set	ON	ON	OFF	OFF	OFF	ON
Service Mode	ON	ON	OFF	ON	OFF	ON

Service Switch

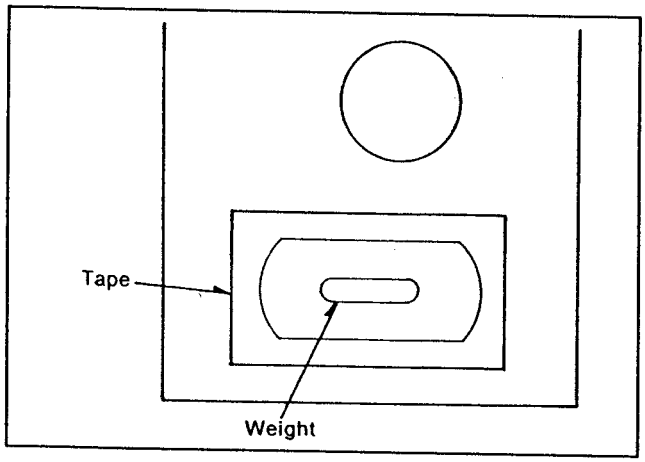

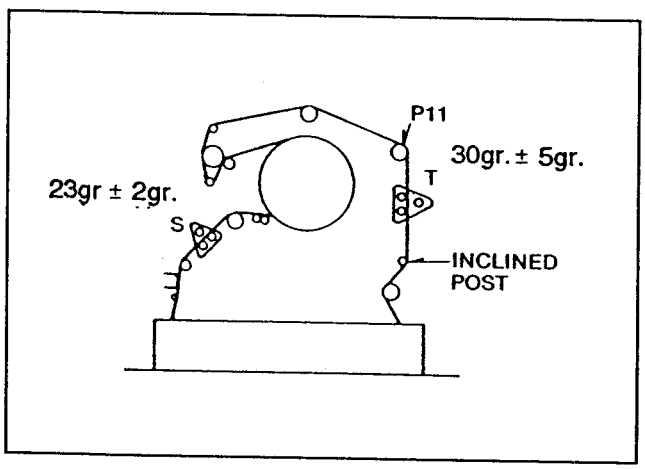

9-3. SUPPLY REEL TORQUE ADJUSTMENT (S5 : SERVO)

SPEC	S REEL TORQUE = 45gr.cm ± 5gr.cm
TEST	SUPPLY REEL
MODE	TAPE LOADING COMPLETION WITHOUT CASSETTE TEST MECH, NO FRLD
TAPE	SELF-RECORDING TAPE
M.EQ	DIAL TORQUE GAUGE(150g max.) --- VFK71 DIAL TORQUE GAUGE ADAPTOR--VFK0134 TENTELO METER --- VFK0132
INPUT	
ADJ.	FRONT PANEL ADJUSTMENT VR

<STEP 1>

1. Remove the cassette compartment.
2. Set the service switch SW1-4 ON and turn the power ON.
3. Attach the Dial Torque Gauge Adaptor with the Dial Torque Gauge and set the Dial Torque gauge, on the supply Reel Motor.
4. Set the VTR into Test mode.

   TEST → SERVO → REEL → MEASURE → S.T

5. Place the unit in the STOP mode.
6. Place the unit into the Supply Reel Torque adjustment mode as shown below.

   TEST → F8(SERVO) → F2(REEL) → F+F2(SREEL)

7. Adjust Front Panel adjustment VR so that the Supply Reel Torque is within specification.

   SPECIFICATION = 45gr.cm ± 5gr.cm

<STEP 2>

1. Insert a self recording tape.
2. Set the VTR into recording mode.
3. Adjust Supply Reel Torque so that the tension is within specification.

   SPECIFICATION : 23gr.cm ± 2gr.cm (P2~P3)

4. If it is not within specification, loowen the screw (A).
5. Insert the Eccentric Screwdriver into Hole (B).
6. Adjust the position of S. Stopper Pin Base Unit so that the supply tension is 18gr.cm ~ 28gr.cm.
7. Insert the Hex Wrench to Hex Screw (C).
8. Adjust the position of S.Stopper Pin Base Unit so that the tension is 23 ± 2gr.
9. Tighten the screw (A), then reconfirm the tension after the screw (A) is tightened.

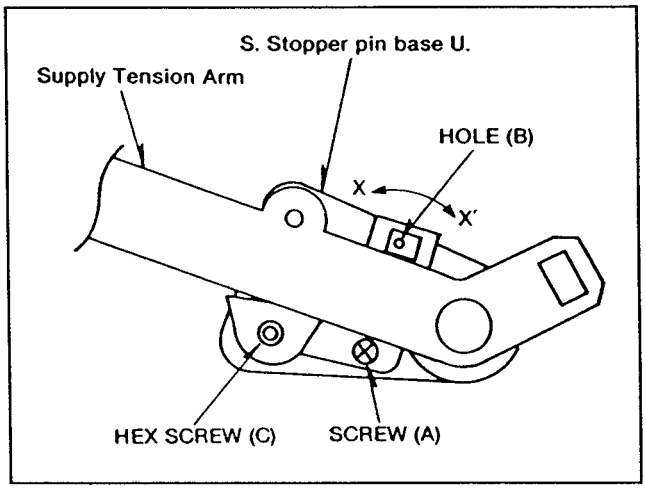

9-4. SENSOR AMP OFFSET ADJUSTMENT (S5 : SERVO)

SPEC	TP2201 = 2.5V ± 0.001V DC
TEST	TP2201[G4]
MODE	EJECT
TAPE	
M.EQ	DIGIRAL VOLT METER
INPUT	
ADJ.	VR (on the Tension I/F P.C.Board)

<STEP 1>

1. DIGITAL VOLT METER : TP2201
2. Adjustment VR on the Tension I/F P.C.Board so that the DC voltage is 2.5V ± 0.001V DC.

SPECIFICATION = 2.5V ± 0.001V DC

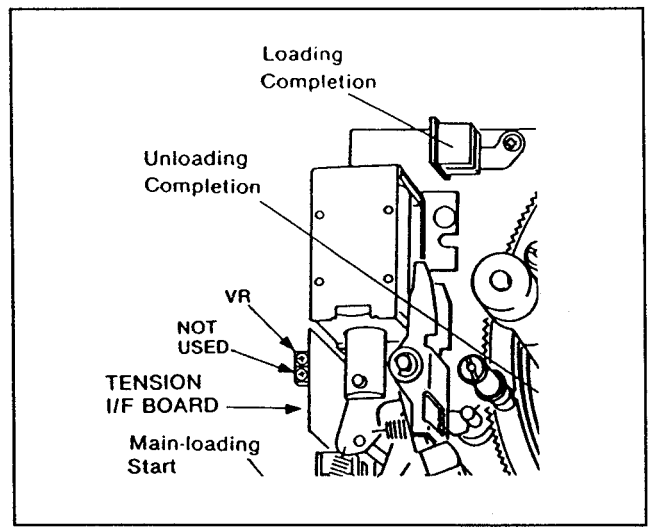

9-5. SUPPLY SENSOR VOLTAGE ADJUSTMENT (S5 : SERVO)

SPEC	TP2201 = 2.5V ± 0.02V
TEST	TP2201[G4]
MODE	EJECT → STOP → PLAY
TAPE	
M.EQ	DIGITAL VOLT METER, MECHANICAL NEUTRAL, ECCENTRIC SCREWDRIVER
INPUT	
ADJ.	SUPPLY MAGNET SENSOR BASE UNIT POSITION

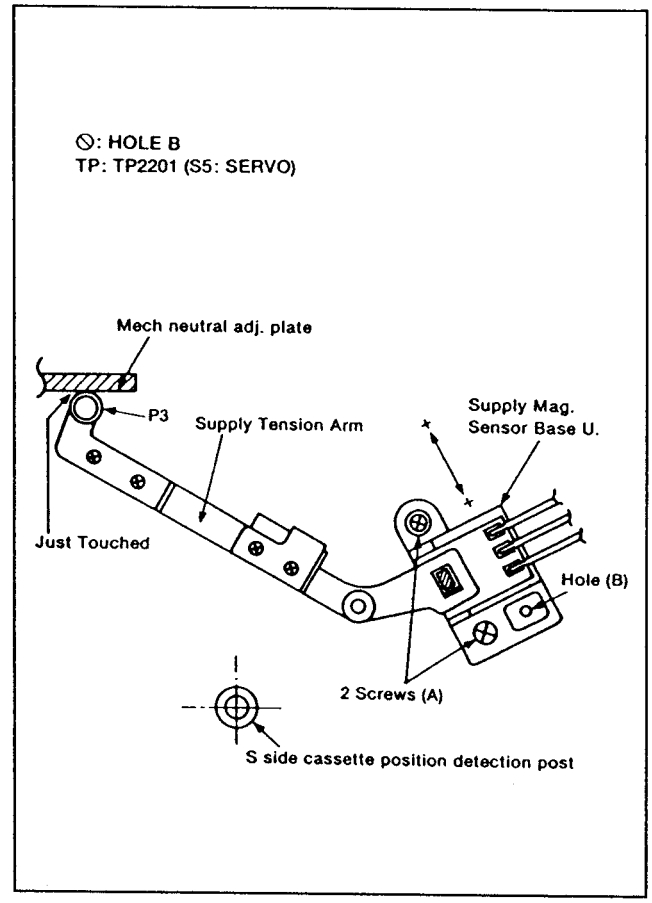

<STEP 1>

1. Turns power off.
2. Remove the cassette compartment.
3. Turns power on.
4. Set the VTR into Mech Test modeas shown below.

TEST → MECH → NO TAPE → M CASSETTE

5. Remove the P3 Stopper from the Mech Neutral Plate and set the Mech Neutral Plate on the Reel Table.
6. Press STOP key to set the loading completion mode.

<STEP 2>

1. Make sure that the P3 post touches the arm of the Mechanical Neutral Plate as shown in Figure.
2. Confirm that the voltage at TP2201 is 2.5V ± 0.001V.
3. If it is not, loosen 2 screws (A) and insert the eccentric screw driver into hole (B).
4. Adjust the position of the Supply Magnet Sensor Base Unit until the voltage at TP2201 is in specification.

SPECIFICATION : 2.5V ± 0.015V

5. Tighten the 2 screws (A) and make sure the voltage at TP2201 does not change.
   (Make sure the voltage at TP2201 does not change.)

<STEP 3>

1. Place the unit in the PLAYBACK mode.
2. Confirm that the voltage at TP2201 (Vs) ± 0.002V.
3. If it is not, adjust the Supply Magnet sensor Base Unit, follow the procedure in <STEP 3>.

9-6. LOADING TORQUE ADJUSTMENT (S5 : SERVO)

SPEC	LOADING TORQUE = 60gr.cm ± 2gr.cm
TEST	TAKE UP REEL
MODE	
TAPE	
M.EQ	REEL TORQUE METER
INPUT	
ADJ.	FRONT PANEL ADJUSTMENT VR

<STEP 1>

1. Remove the cassette compartment.
2. Set the service switch SW1-4 ON and turn the power ON.
3. Attach the Dial Torque Gauge Adaptor with the Dial Torque Gauge and set the Dial Torque Gauge on the Take Up Reel Motor.
4. Set the VTR into Mechanism Test mode.

   TEST → SERVO → REEL → MEASURE → L

5. Place the unit in the STOP mode.
6. Place the unit into the Take Up Reel Torque Adjustment mode as shown below.

   TEST → F8 (SERVO) → F2 (REEL) → F + F1 (LOADING)

7. Adjust Front Panel adjustment VR so that the Take Up Reel Torque is within specification.

   SPECIFICATION = 60gr.cm ± 2gr.cm

9-7. CONFIRM THAT THE CAPSTAN ERROR MIX RATE VR (S5 : SERVO)

SPEC	
TEST	
MODE	
TAPE	
M.EQ	
INPUT	
ADJ.	VR203[G1], VR2011[ ]

<STEP 1>

1. Turn VR203 to fully clockwise.

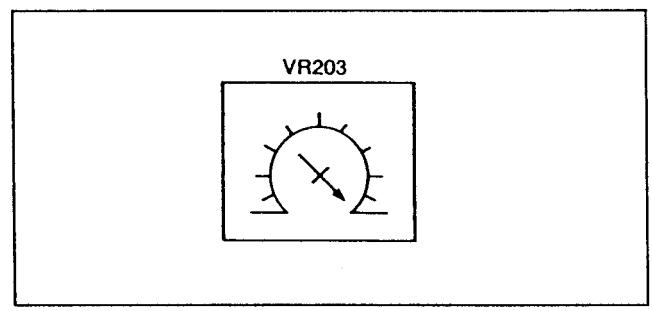

<STEP 2>

1. Set VR2011 to 5.5 division.

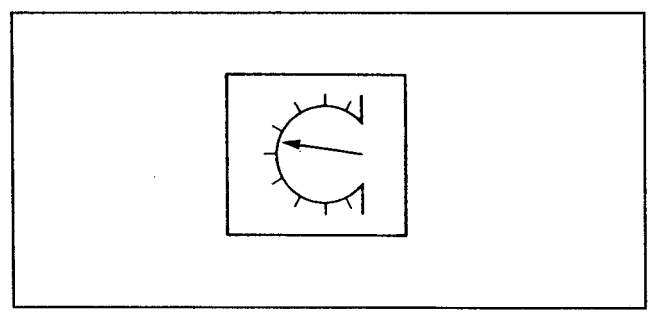

9-8. SUPPLY (FWD.) TENSION ADJUSTMENT (S5 : SERVO)

SPEC	TENSION = 23g ± 2g
TEST	"A" (P2 ~ P3), TP2201[G4]
MODE	PLAY → STOP
TAPE	BLANK 90min TAPE BEGINNING PORTION
M.EQ	TENSION METER, DIGITAL VOLT METER
INPUT	
ADJ.	SUPPLY STOPPER PIN BASE UNIT

<STEP 1>

Calibration of Tension meter

1. Before performing of the tape tension adjustment. The Tension Meter should be checked as follows.
2. Use 1/2" Digital Metal tape and a 1 once weight.
3. Pull up a tape by hand as shown in Figure.
4. Adjust a Hex screw on the Tension Meter so that the tension meter reading is set for a 1 once.

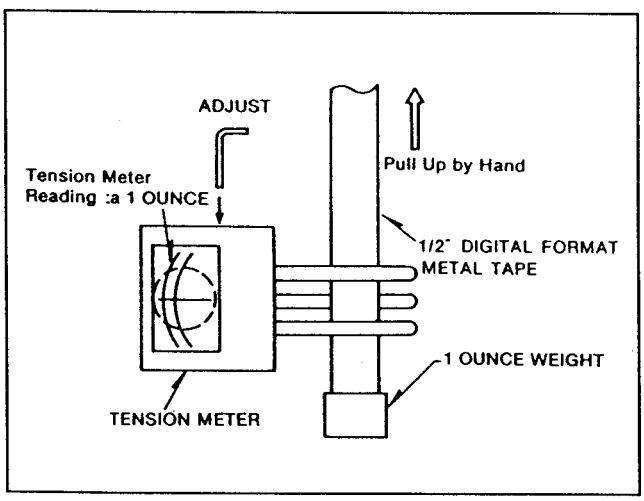

<STEP 2>

1. Insert the tension meter to between P2 and P3 post (portion "A") as shown in Figure.
2. Mode : PLAY, M cassette 90 min.
3. Confirm that the tape tension is 23 ± 2g at the tape beginning portion.

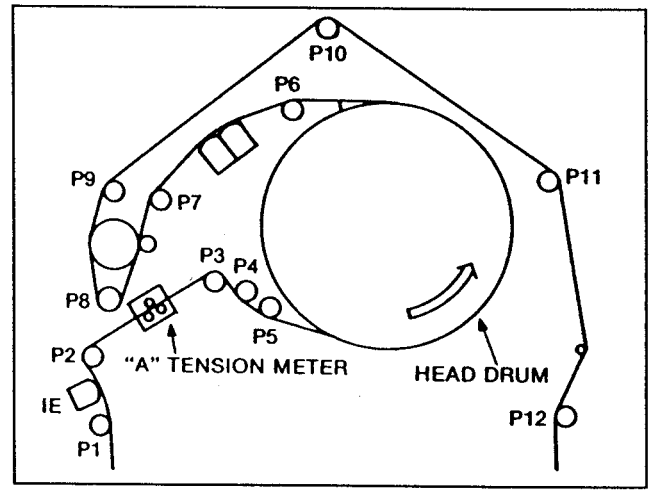

<STEP 3>

1. If it is not within specification, loosen the screw (A).
2. Insert the eccentric screwdriver into Hole (B).
3. Adjust the position of S.Stopper Pin Base Unit so that the supply tension is 18gr ~ 28gr.
4. Insert the Hex Wrench to Hex screw (C).
5. Adjust the position of S.Stopper Pin Base Unit so that the tension is 23 ± 2g.
6. Finally, tighten the screw (A).
7. Reconfirm the tension after the screw (A) is tightened.

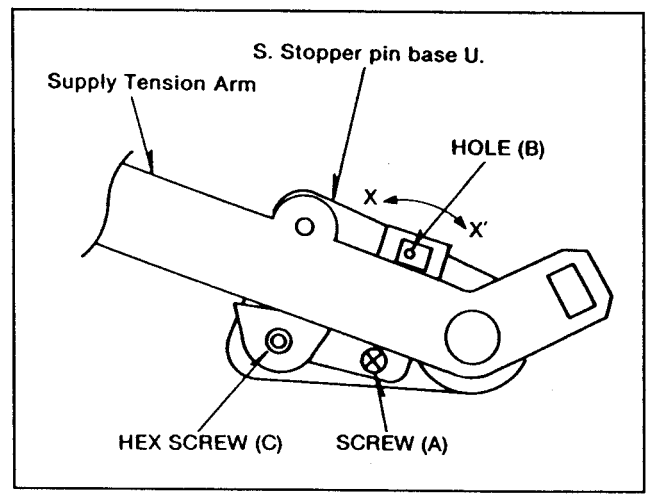

<STEP 4>

1. Place the unit in STOP mode.
   (Loading completed condition.)
2. SCOPE : TP2201
3. Confirm that the sensor voltage is (2.5V) ± 250mV.

9-9. CTL REC CURRENT ADJUSTMENT (S5 : SERVO)

SPEC	TP44 = 35mV + 2mV/-0mV
TEST	TP44[H4], PROBE 1:1, GND = TPG5[G4]
MODE	REC PLAY
TAPE	BLANK TAPE
M.EQ	OSCILLOSCOPE
INPUT	
ADJ.	VR8[G2]

<STEP 1>

1. SCOPE : TP44
2. Adjust VR8 so that the REC CTL pulse is 35 +2/-0 mV as shown in Figure.

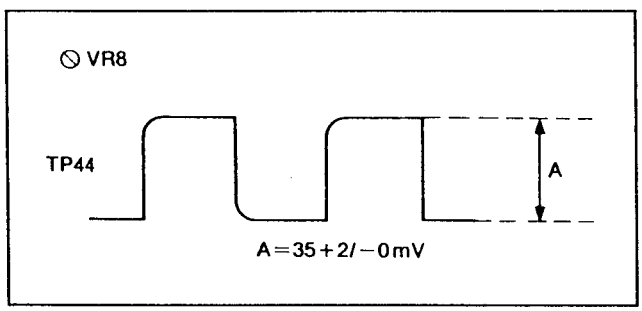

9-10. CONTROL PLAYBACK AMP OFFSET ADJUSTMENT (S5 : SERVO)

SPEC	TP20 + (CR) = 0V ± 0.1V DC
TEST	TP20[H1] ... REFER TO FIGURE
MODE	VAR 0.04
TAPE	NO SIGNAL RECORDED TAPE
M.EQ	OSCILLOSCOPE
INPUT	
ADJ.	VR9[H2]

<STEP 1>

1. SCOPE : TP20
2. Adjust VR9 so that the DC level is 0 ± 0.1V DC.

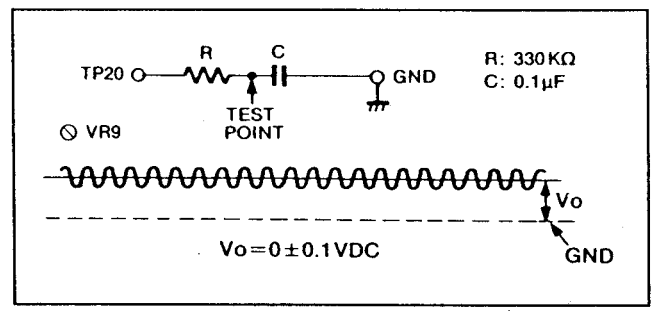

9-11. CTL PLAYBACK AMP GAIN ADJUSTMENT (S5 : SERVO)

SPEC	TP20 = 10Vpp +2V/-0V
TEST	TP20[H1]
MODE	REC PLAY → PLAY
TAPE	BLANK TAPE
M.EQ	OSCILLOSCOPE
INPUT	75% COLOR BAR to VIDEO IN
ADJ.	VR6[H1]

<STEP 1>

1. SCOPE : TP20
2. Supply a color bar signal to Video Input and recorded.
3. Playback a just recorded portion.
4. Adjust VR6 so that the signal level A is 10 +2 Vp-p.
5. Confirm that the CF MODE and SERVO LED on the Front Panel turned on.

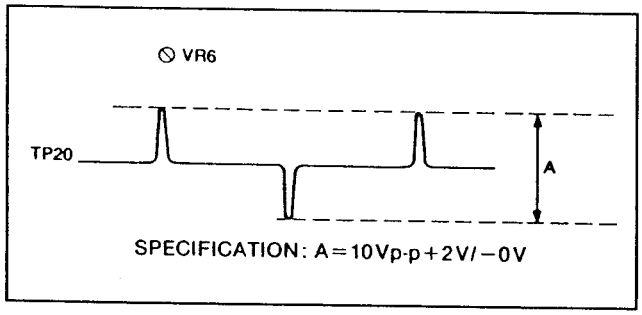

9-12. CTL PLAYBACK AMP F/V GAIN ADJUSTMENT (S5 : SERVO)

SPEC	TP20 = 10Vpp +2V/-0V
TEST	TP20[H1]
MODE	REC PLAY → VAR SPEED : × 0.52
TAPE	BLANK TAPE
M.EQ	OSCILLOSCOPE
INPUT	75% COLOR BAR to VIDEO IN
ADJ.	VR7[F3]

<STEP 1>

1. SCOPE : TP20
2. Supply a color bar signal to Video Input and recorded.
3. Playback a just recorded portion by VAR × 0.52.
4. Adjust VR7 so that the signal level A is 10 +2 Vp-p.

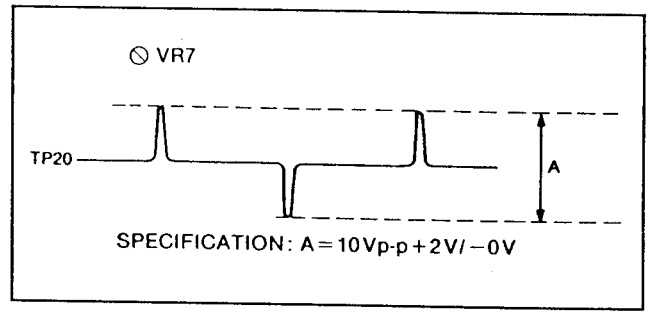

9-13. CTL REC CURRENT ADJUSTMENT (S5 : SERVO)

SPEC	TP44 = 70mV +5mV/-0mV
TEST	TP44[H4], PROBE 1:1, GND=TPG5[G3 or G4]
MODE	REC PLAY FAST FORMAT × 3 MODE
TAPE	SELF RECORDED TAPE
M.EQ	OSCILLOSCOPE
INPUT	COLOR BAR to VIDEO IN
ADJ.	VR10[G1]

<STEP 1>

1. SCOPE : TP44
2. Place the unit in the Fast Format (X3) mode.
3. Adjust VR10 so that the signal level A is 70mV + 5mV/0mV.

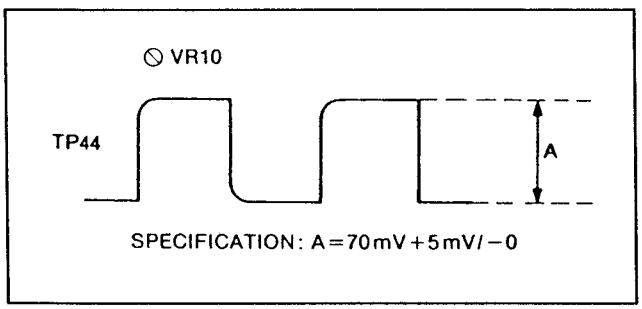

Cf:
Fast Format (X3) mode
HOME
SET UP
FORMAT
EXECUTE

9-14. PG SHIFTER ADJUSTMENT (S5:SERVO)

SPEC	T=25.5±0.5μsec
TEST	TP11 (REC AMP) TP37 (SERVO)
MODE	PLAY
TAPE	75% COLOR BAR PORTION ALIGNMENT TAPE
M.EQ	OSCILLOSCOPE
INPUT	
ADJ.	SW2[F2], SW3

<STEP 1>
MENU CONDITION

TEST MENU

Select the TRACKING FIX/VAR F10 to "FIX".

<STEP 2>
1. SCOPE CH1 : TP11 (REC AMP)
   SCOPE CH2 : TP37 (SERVO)
2. SCOPE TRIGGER : CH2
3. Adjust SW2, 3 and 4 so that the period T is as shown in Figure.

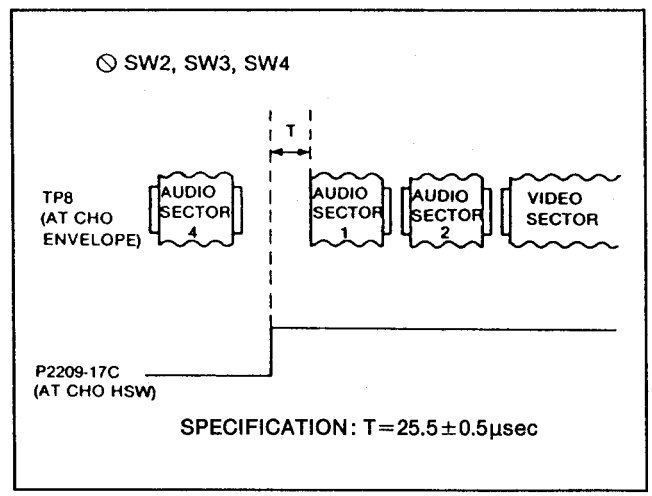

SW2: Fine adjustment
SW3: Pre fine adjustment
SW4: Coarse adjustment

10. TIME CODE SECTION

10-1. SUPER C CURRENT ADJUSTMENT (S6 : TIME CODE)

TEST	VIDEO OUT 3, TV MONITOR
MODE	EE1, EJECT
TAPE	
M.EQ	TV MONITOR
INPUT	75% COLOR BAR
ADJ.	VR1[B1]

<STEP 1>

1. Set the VTR EE1 and EJECT mode.
2. Connect the TV monitor to VIDEO OUT 3.
3. Confirm the Time Code super is displayed o the monitor.

<STEP 2>

1. Set TC/CHR mode.
2. Set the POSITION (F1) from FIX to ARRANGE.
3. Press CURSOR RIGHT many times until the Time Code super reaches the right side of the TV monitor.

<STEP 3>

1. Adjust VR1 so that the Time Code super is displayed at right side of the monitor as shown in Figure.

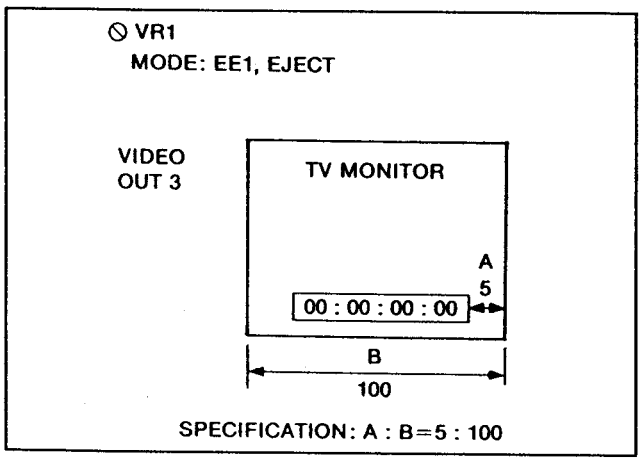

10-2. PB LTC LEVEL ADJUSTMENT (S6 TIME CODE SUB)

TEST	TP6201
MODE	PLAY
TAPE	SHUFFLING OFF 75% COLOR BAR ALIGNMENT TAPE
M.EQ	oscilloscope
INPUT	
ADJ.	VR6201

<STEP 1>

1. Place the VTR in the SHTL × 4mode.
2. Verify that the LTC level A as shown in figure.

<STEP 2>

1. Place the VTR in the normal play mode.
2. Adjust VR6201 so taht the LTC level is same as A level of SHTL × 4 mode.

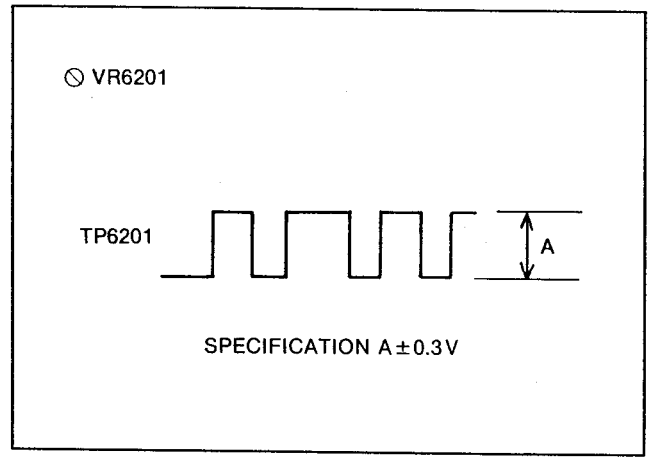

12. AUDIO PROCESS (S8) BOARD

12-1. DIGITAL AUDIO INTERFACE (1) ADJUSTMENT (S8 : AUDIO PROCESS)

TEST	TP401[H3]
MODE	EE (EJECT)
TAPE	
M.EQ	OSCILLOSCOPE
INPUT	75% COLOR BAR to VIDEO IN CH1 (L) 1kHz -18dB, CH2 (R) 2kHz -18dB DIGITAL AUDIO to DIGITAL AUDIO IN
ADJ.	VR401[A2], VR403[A1]

4000 SERIES

<STEP 1>

1. SCOPE : TP401
2. Confirm that the level is High (+5V).
3. If it is not, adjust VR401 and VR403 so that the level is High (+5V).
4. Confirm that the level is always High (+5V), when turn the power ON.

<STEP 2>

1. Disconnect the Digital Audio Input Connector.
2. Confirm that the level is LOW (0V).

12-2. DIGITAL AUDIO INTERFACE (2) ADJUSTMENT (S8 : AUDIO PROCESS)

TEST	TP402[I3]
MODE	EE (EJECT)
TAPE	
M.EQ	OSCILLOSCOPE
INPUT	75% COLOR BAR to VIDEO IN CH3 (L) 1kHz -18dB, CH4 (R) 2kHz -18dB DIGITAL AUDIO to DIGITAL AUDIO IN
ADJ.	VR402[A3], VR404[A2]

<STEP 1>

1. SCOPE : TP402
2. Confirm that the level is High (+5V).
3. If it is not, adjust VR402 and VR403 so that the level is High (+5V).
4. Confirm that the level is always High (+5V), when turn the power ON.

<STEP 2>

1. Disconnect the Digital Audio Input Connector.
2. Confirm that the level is LOW (0V).

12-3. CUE METER OFFSET ADJUSTMENT (S8 : AUDIO PROCESS)

SPEC	LESS THAN -50dB
TEST	CUE METER
MODE	STOP
TAPE	BLANK TAPE
M.EQ	OSCILLOSCOPE
INPUT	
ADJ.	VR4551[B4]

<STEP 1>

1. Set the VTR EE1 and STOP mode.
2. Adjust VR4551 so that the cue meter is less than -50dB.

13. VIDEO A/D PLL (S9) BOARD

Adjust with this section, perform after completed adjustment with L1 and L4 section.

MENU CONDITION
AUDIO IN MENU
Select the VIDEO INPUT F3 to "ANALOG"
VIDEO OUT SET UP MENU
Select the VIDEO STANBY OFF to "EE2"
STANBY OFF
VIDEO : TAPE, EE1, *EE2
MENU CONDITION
TEST MENU
VIDEO FUNCTION
Pless the SCH F10 Key on the Front
Panel and display the INPUT REF SCH METER.

13-1. INPUT PLL ADJUSTMENT (S9 : VIDEO A/D PLL)

SPEC	REFER TO FIGURE
TEST	MONITOR TV
MODE	EE2 (EJECT)
TAPE	
M.EQ	MONITOR TV
INPUT	ANALOG COLOR BAR to VIDEO IN
ADJ.	VR401 (PLL ADJ.)[G4]

8000 SERIES

<STEP 1>
1. Connect the MONITOR TV to VIDEO OUT 1.
2. Confirm that the E-E picture is synchronized on Monitor TV.
3. If the E-E picture is not synchronized on Monitor TV, adjust VR401 follow the below adjustment procedure.

<STEP 2>
1. Turn VR401 fully clockwise and turn power OFF and ON.
2. Slowly turn VR401 to counter clockwise and adjust VR401 so that the E-E picture synchronized on Monitor TV.
3. Memorized position of VR401 as shown in Figure (Position 1).

<STEP 3>
1. Turn VR401 fully clockwise and turn power OFF and ON.
2. Slowly turn VR401 to counter clockwise and adjust VR401 so that the E-E picture synchronized on Monitor TV.
3. Memorized position of VR401 as shown in Figure (Position 2).

<STEP 4>
1. Set the VR401 in centered (position 1) and (position 2) sa shown in Figure.

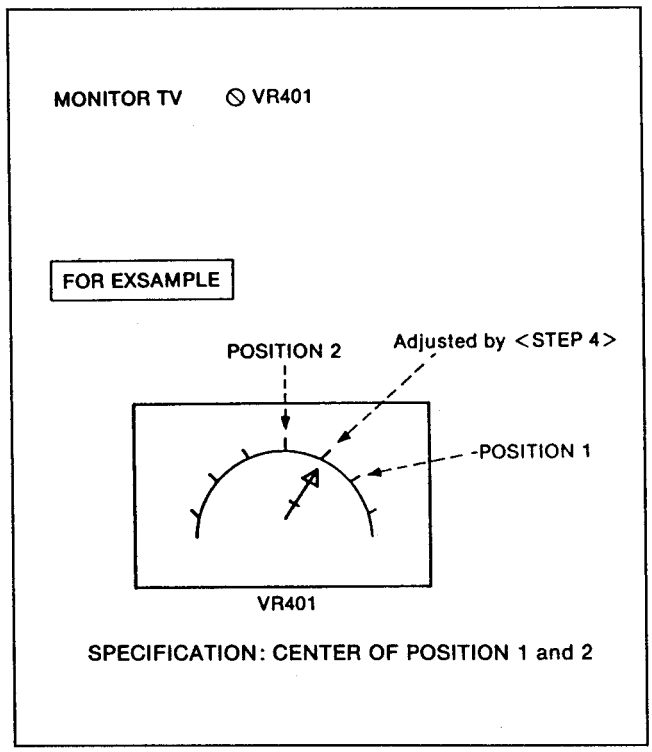

SPECIFICATION: CENTER OF POSITION 1 and 2

13-2. CF ADJUSTMENT (S9 : VIDEO A/D PLL)

SPEC	2.6V ± 0.1V
TEST	IC609 Pin4
MODE	EE2 (EJECT)
TAPE	
M.EQ	OSCILLOSCOPE
INPUT	COLOR BAR SIGNAL
ADJ.	VR602[H3]

<STEP 1>
1. SCOPE CH1 : IC609 Pin4
2. Adjust VR602 so that the output level is 2.6V ± 0.1V.

13-3. SCH ADJUSTMENT (S9 : VIDEO A/D PLL)

SPEC	AS SHOWN FIGURE
TEST	TP701 [G2], TP703 [G1]
MODE	EE2 (EJECT)
TAPE	
M.EQ	OSCILLOSCOPE
INPUT	COLOR BAR SIGNAL TO REF INPUT AND VIDEO IN
ADJ.	VR701[G1]

<STEP 1>
1. SCOPE CH1 : TP703 (TRIGGER)
   CH2 : TP701
2. Set the SW701 to ON.

<STEP 2>
1. Turn VR701 to clockwise.
2. Adjust VR701 so that the waveform phase is as shown in figure.

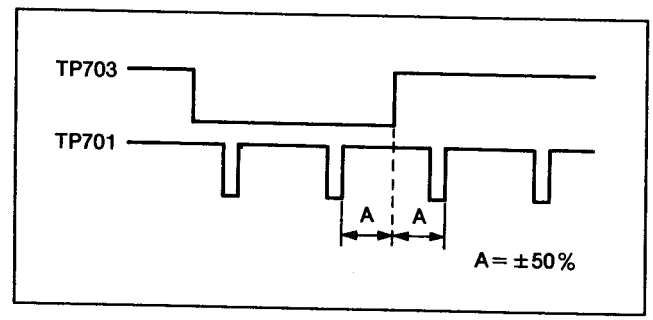

13-4. INCOME CF DETECTION ADJUSTMENT (1) (S9 : VIDEO A/D PLL)

SPEC	ALTERNATE +90° and -90°
TEST	INPUT SCH METER on TEST VIDEO MUNU
MODE	EE2 (EJECT)
TAPE	
M.EQ	SCH METER
INPUT	1411 COLOR BAR to VIDEO IN
ADJ.	VR702 (SCH DET 2)[G1] VR705 (SCH GAIN)[I2] VR706 (SCH OFFSET)[I2]

<STEP 1>

1. CONNECTION
2. CONFIRMATION
   Confirmation that the SCH phase on SCH METER.

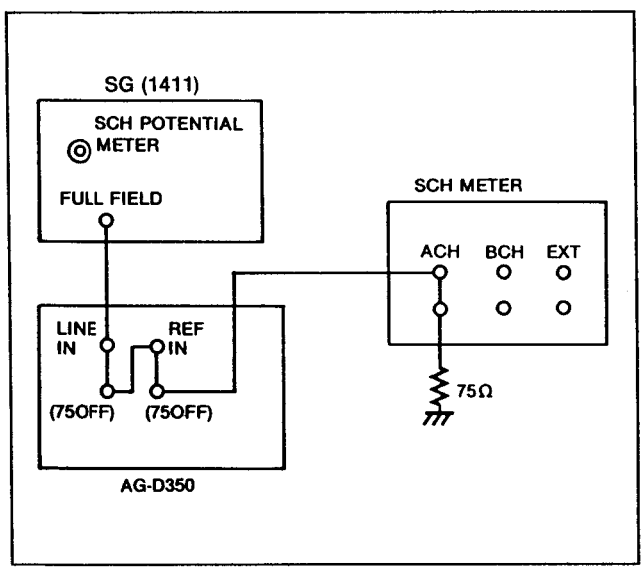

<STEP 2>

1. Set VR705 and VR706 to center position.
2. Adjust the Potential Meter on 1411 so that the SCH is +90° or -90° by turns.
3. Turn VR702 to fully clockwise.
4. Display the INPUT REF SCH METER as refer to MENU CONDITION 2 at the beginning of this SECTION.
5. Adjust VR702 so that the INPUT REF SCH METER displayed +90° and -90° by turns.
6. After finished this adjustment, perform 13-15 SCH METER ADJUSTMENT.

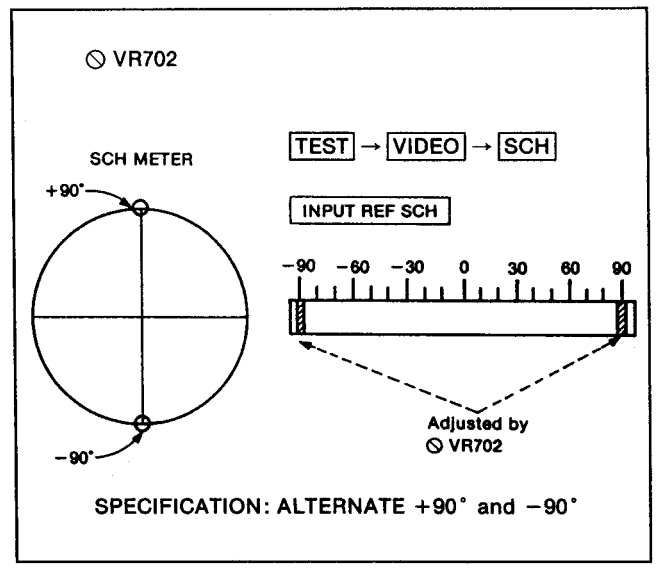

13-5. SCH METER ADJUSTMENT (S9 : VIDEO A/D PLL)

SPEC	
TEST	INPUT SCH METER on TEST VIDEO MENU
MODE	EE2 (EJECT)
TAPE	
M.EQ	SCH METER
INPUT	1411 COLOR BAR to VIDEO IN
ADJ.	VR705 (SCH GAIN)[I2], VR706 (SCH OFFSET)[I2]

<STEP 1>
MACHINE CONDITION
Refer to <STEP 1> on item 13-2.

<STEP 2>
1. Confirm that the SCH of SW701 is set to ON position.

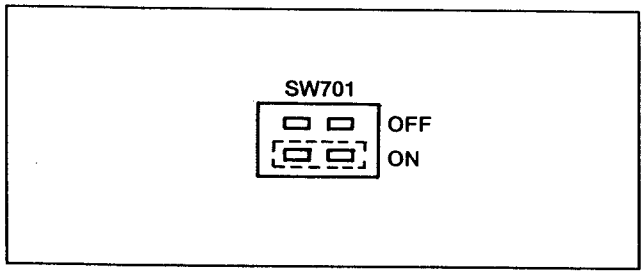

<STEP 3>
1. Set the SW701 to ON side as shown in Figure.
2. Adjust the Potention Meter VR on 1411 so that the SCH is +45° at SCH METER.
3. Display the INPUT SCH METER as refer to MENU CONDITION 2 at the beginning of this SECTION.
4. Adjust VR706 so that the INPUT SCH METER displayed +45°.

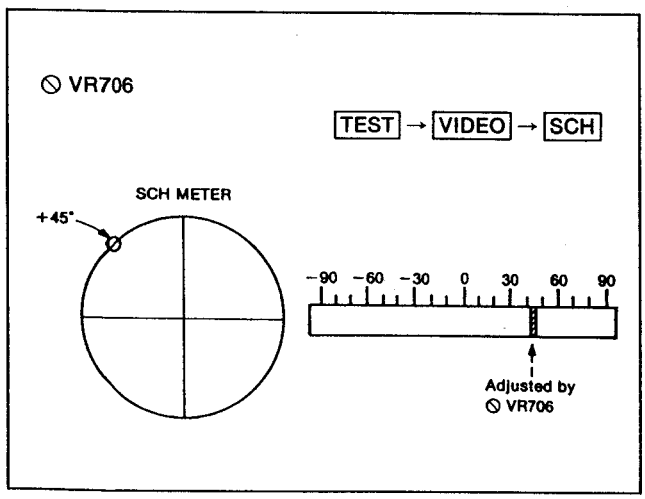

<STEP 4>
1. Adjust the Potention Meter VR on 1410 so that the SCH is +45° at SCH METER.
2. Display the INPUT SCH METER as refer to MENU CONDITION 2 at the beginning of this SECTION.
3. Adjust VR705 so that the INPUT SCH METER displayed -45°.

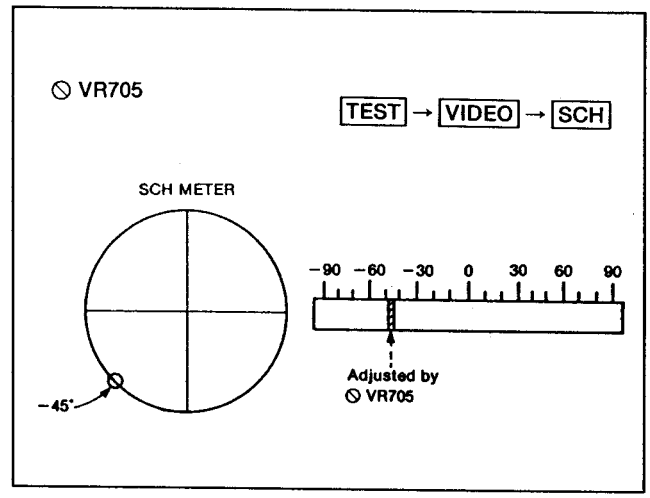

<STEP 5>
1. Re-adjust above <STEP 3> and <STEP 4> until stabilize the SCH indication.

13-6. INPUT SCH DETECTION ADJUSTMENT (S9 : VIDEO A/D PLL)

SPEC	Voltage at TP707, TP708 = TP706 ± 20mV
TEST	TP706[I1], TP707[I1], TP708[I2]
MODE	EE2 (EJECT)
TAPE	
M.EQ	SCH METER OSCILLOSCOPE
INPUT	1411 75% COLOR BAR to VIDEO IN
ADJ.	VR703 (SCH - H)[I2], VR704 (SCH -L)[I2]

<STEP 1>
MACHINE CONDITION
Refer to <STEP 1> on item 13-2.

<STEP 2>
1. Confirm that the SCH of SW701 is set to ON position.

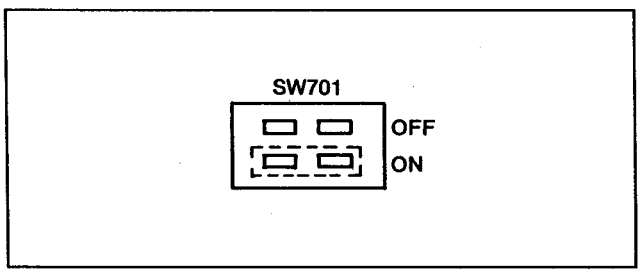

<STEP 3>
1. SCH METER : SCH mode
2. Adjust the Potention Meter VR on 1411 so that the SCH is +70° at SCH METER.
3. SCOPE CH1 : TP707
   CH2 : TP706
4. Measure the voltage at TP706.
5. Adjust VR703 so that the DC voltage at TP707 is TP706 ± 20mV.

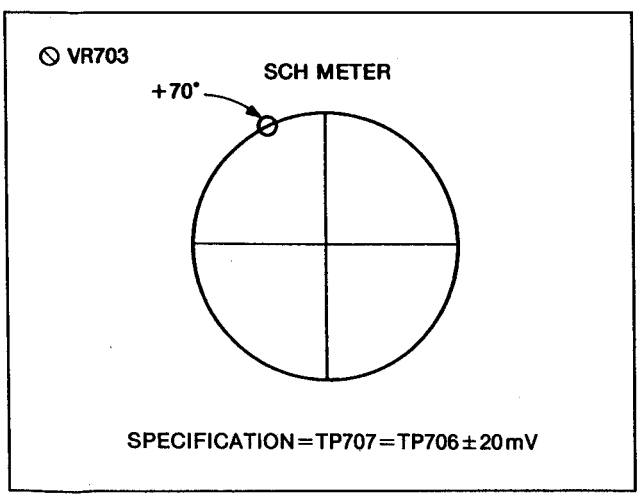

<STEP 4>
1. Adjust the Potention Meter VR on 1411 so that the SCH is -70° at SCH METER.
2. SCOPE CH1 : TP708
   CH2 : TP706
3. Adjust VR703 so that the DC voltage at TP708 is TP706 ± 20mV.

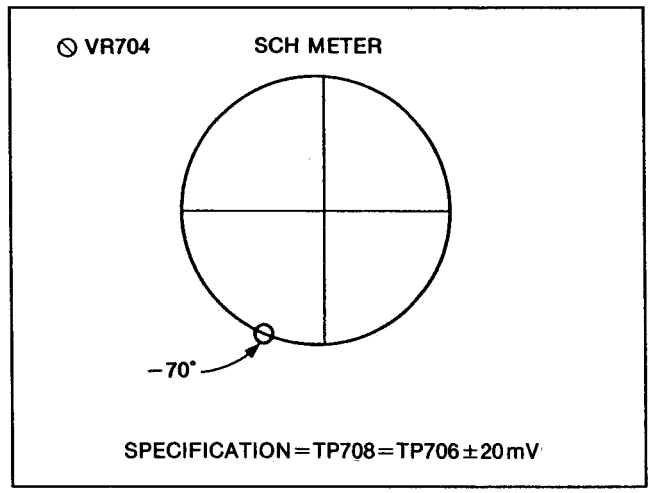

13-7. INCOME CF DETECTION ADJUSTMENT (S9 : VIDEO A/D PLL)

SPEC	FRONT SCH METER DISPLAY 0°
TEST	INPUT SCH METER on TEST VIDEO MENU
MODE	EE2 (EJECT)
TAPE	
M.EQ	
INPUT	DIGITAL 75% COLOR BAR to VIDEO IN
ADJ.	VR702 (SCH DET 2)[G1]

<STEP 1>
MACHINE CONDITION
Refer to <STEP 1> on item 13-2.

<STEP 2>
1. Confirm that the SCH of SW701 is set to ON position.

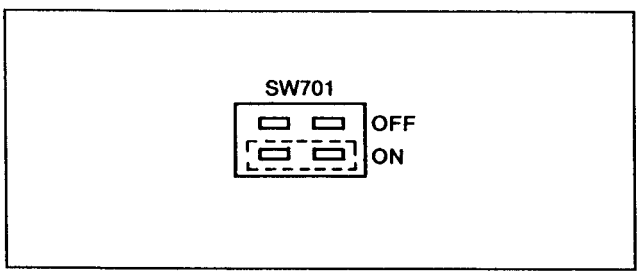

<STEP 3>
1. Turn the power OFF and ON.
2. Display the OUT REF SCH METER as refer to MENU CONDITION 2 at the beginning of this SECTION.
3. Adjust VR702 so that the OUT REF SCH METER displays 0°.

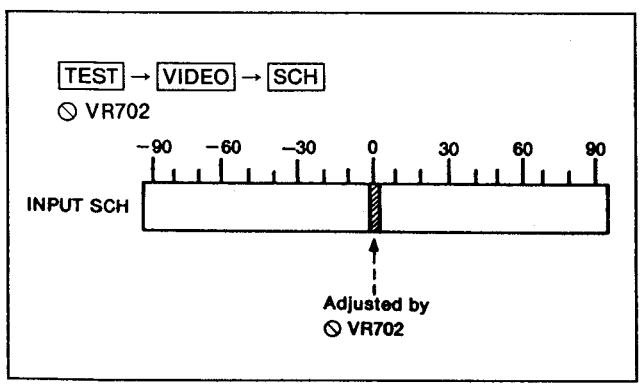

<STEP 4>
1. Confirm that the SW701 is set to ON position.

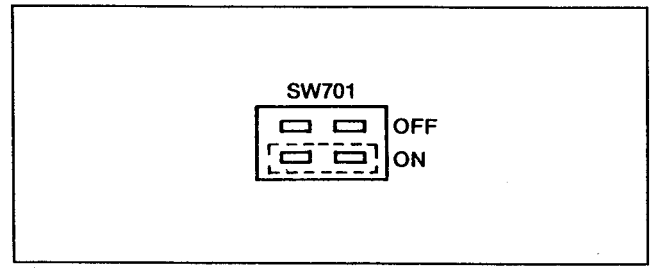

13-8. VIDEO PHASE ADJUSTMENT (S9 : VIDEO A/D PLL)

SPEC	REFER TO FIGURE
TEST	VIDEO OUT IC611-Pin 2, TP401[G2]
MODE	EE2 (EJECT)
TAPE	
M.EQ	SCH METER OSCILLOSCOPE
INPUT	DIGITAL 75% COLOR BAR to VIDEO IN
ADJ.	VR601 (H PHASE)[G2]

<STEP 1>

1. Connect the VTR as follows.

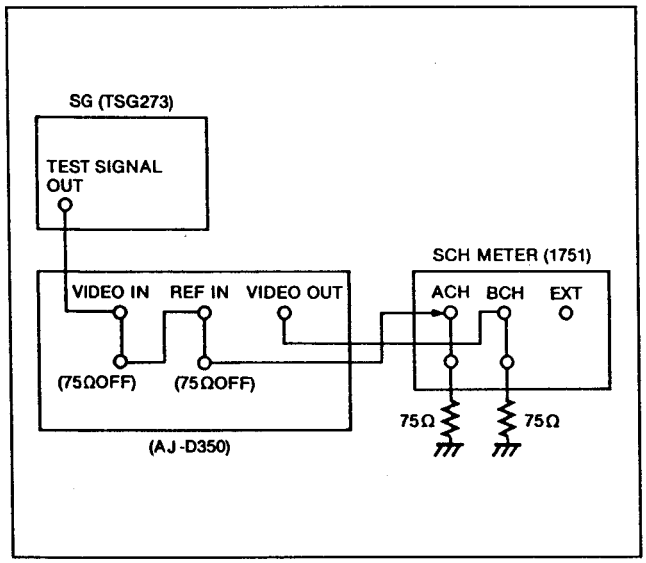

<STEP 2>

1. Set the Dip SW 151 on the L2 P.C.B. as follow as shown in Figure.

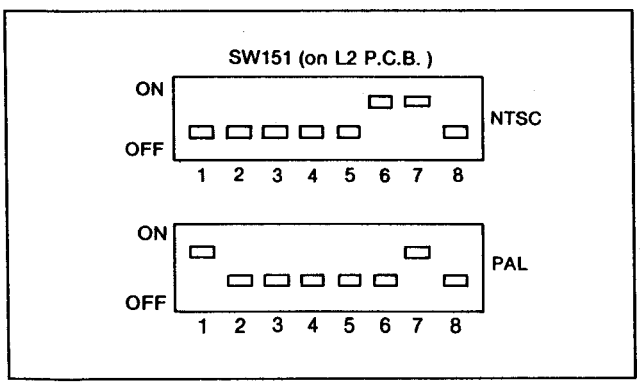

<STEP 3>

1. SCOPE CH1 : TP601
   CH2 : TP401
2. Adjust VR601 so that the relation between HC and HO signal as shown in Figure.

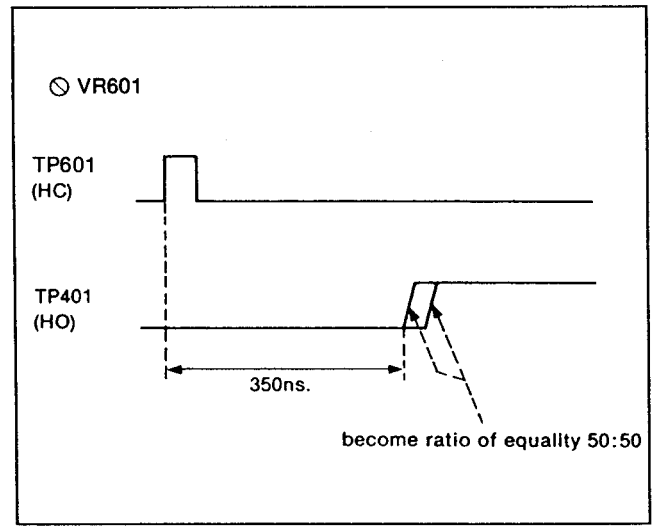

13-9. VIDEO INPUT CLAMP ADJUSTMENT (S9 ; VIDEO A/D PLL)

SPEC	A = 0V (FLAT)
TEST	VIDEO OUT 1
MODE	EE2 (EJECT)
TAPE	
M.EQ	WAVEFORM MONITOR
INPUT	DIGITAL RAMP SIGNAL to VIDEO IN
ADJ.	VR102 (CLAMP DC)[B3]

<STEP 1>

1. WFM MONITOR : VIDEO OUT 1
2. Adjust VR102 so that the A portion is flat as shown in Figure.

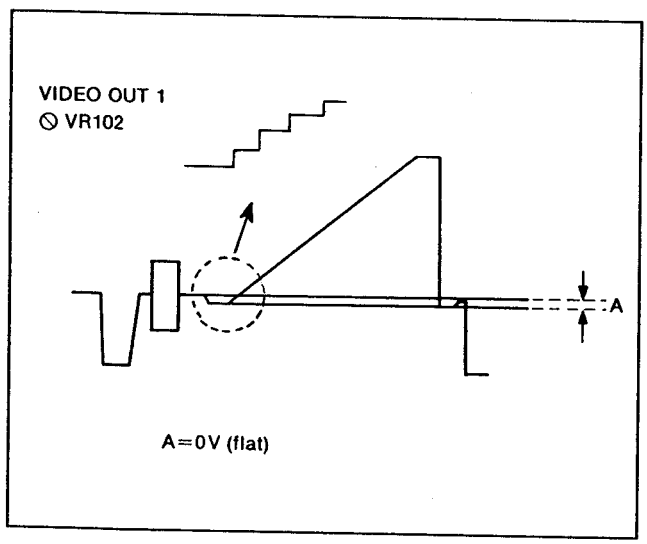

<STEP 2>

1. Expand WFM monitor by × 5 mode.
2. Confirm that there are 3 stairs in the 5 divisions of WFM monitor as shown in figure.

13-10. VIDEO INPUT LEVEL ADJUSTMENT (S9 : VIDEO A/D PLL)

SPEC	VIDEO OUT 1 = 1V ± 0.002Vpp
TEST	VIDEO OUT 1
MODE	EE2 (EJECT)
TAPE	
M.EQ	WAVEFORM MONITOR
INPUT	DIGITAL 75% COLOR BAR to VIDEO IN
ADJ.	VR101 (A/D LEVEL)[A3]

<STEP 1>

1. WFM MONITOR : VIDEO OUT 1
2. Adjust VR101 so that the Video Level (A) is 1 ± 0.002V as shown in Figure.

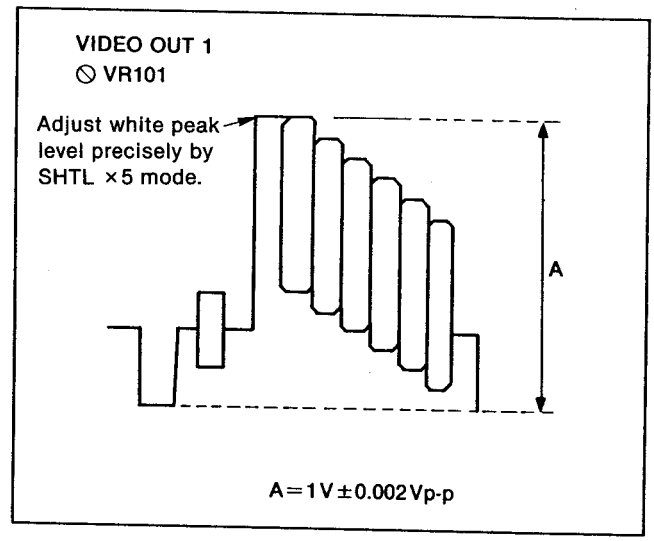

13-11. VIDEO INPUT FREQUENCY ADJUSTMENT (1) (S9 : VIDEO A/D PLL)

SPEC	RIPPLE ± 1%
TEST	VIDEO OUT 1
MODE	EE2 (EJECT)
TAPE	
M.EQ	WAVEFORM MONITOR
INPUT	DIGITAL H SWEEP to VIDEO IN
ADJ.	C170[A2]

<STEP 1>
1. WFM MONITOR : VIDEO OUT 1
2. Adjust C170 so that level from 1MHz to 4MHz is flat as shown in Figure.

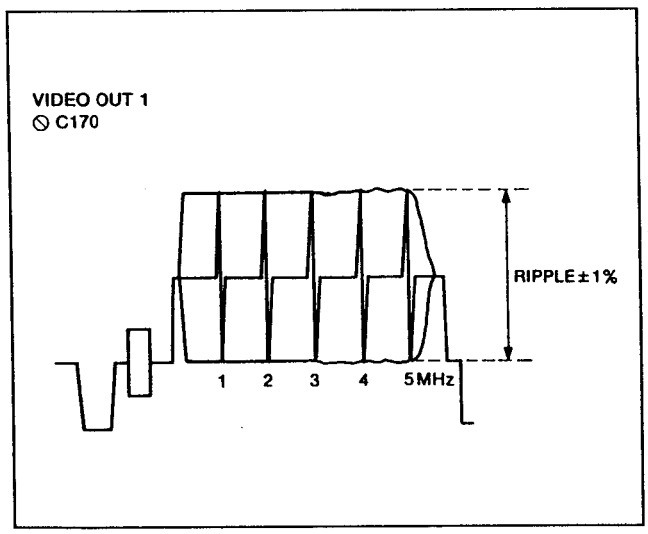

13-12. VIDEO INPUT FREQUENCY ADJUSTMENT (2) (S9 : VIDEO A/D PLL)

SPEC	CENTER OF THE SCALE
TEST	VIDEO OUT 1
MODE	E-E (EJECT)
TAPE	
M.EQ	VECTOR SCOPE
INPUT	DIGITAL 75% COLOR BAR to VIDEO IN
ADJ.	C170[A2], VR103[B3]

<STEP 1>
1. WFM MONITOR : VIDEO OUT 1
2. Adjust C170 so that each vector level is in center the scale of vector scope.
3. Adjust VR103 so that the each vector dot is in center of the box.

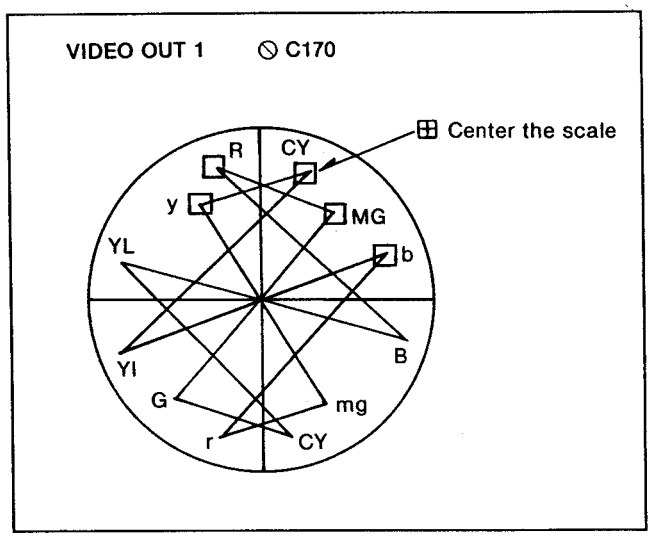

PAL

13-13. INPUT LEVEL METER ADJUSTMENT (S9 : VIDEO A/D PLL)

SPEC	INPUT LEVEL METER = 0dB
TEST	INPUT LEVEL METER
MODE	E-E (EJECT)
TAPE	
M.EQ	
INPUT	(TSG273) 100% COLOR BAR to VIDEO IN
ADJ.	VR201 (BOT DC ADJ.)[D2], VR202 (AD VRT ADJ.)[D3]

<STEP 1>
MENU CONDITION
VIDEO IN MENU : F5
Select the LEVEL DET to "PEAK".

<STEP 2>
1. Adjust VR202 so that the VIDEO INPUT LEVEL METER is 0dB.

<STEP 3>
MENU CONDITION
VIDEO IN MENU : F5
Select the LEVEL DET to "SYNC".

<STEP 4>
1. Adjust VR201 so that the VIDEO INPUT LEVEL METER is 0dB.

14. REC AMP BOARD

Confirm that the Machine Condition with L2, L3, L4, S1 and S2 board, refer to Machine Condition at the beginning of SECTION 5 (REC/PLAY CH0/CH1)

14-1-(1). REC 2nd HARMONICS DISTORTION ADJUSTMENT (1) (REC AMP)

SPEC	MINIMUM 2ND HARMONICS
TEST	TP3 (CH0 A0)[B2], TP4 (CH0 B)[B2]
MODE	CW RECORDING
TAPE	SELF RECORDING TAPE
M.EQ	SPECTRUM ANALYZER
INPUT	75% COLOR BAR
ADJ.	VR200[B6]

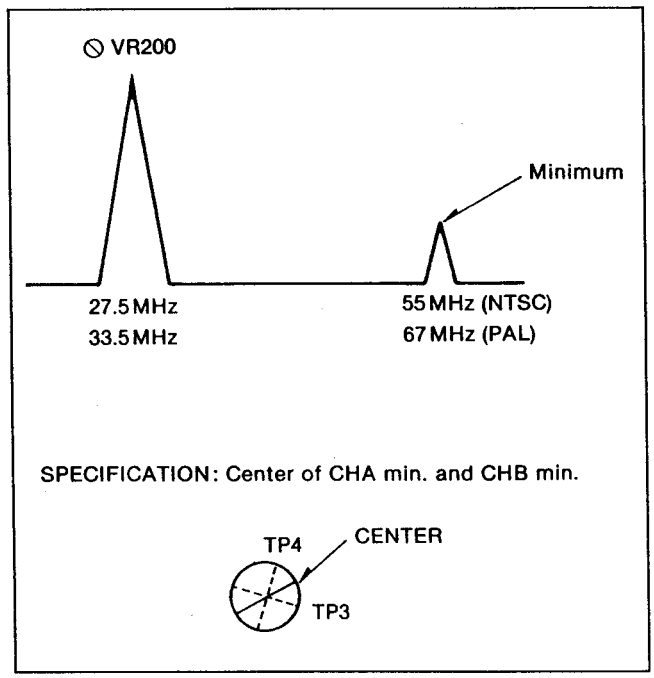

<STEP 1>
Set the spectrum analyzer as follows.

(REG 3)

REFERENCE LEVEL	:	0dBm
ATTEN	:	10dB
DIV (dB/DIV)	:	10dB/div
START FREQUENCY	:	20MHz
STOP FREQUENCY	:	70MHz
RES BW	:	300kHz
VIDEO BW	:	10kHz
SWEEP TIME	:	30m sec
TRIGGER	:	FREE RUN

<STEP 2>

1. Insert a self recording tape to the VTR and set the VTR on Recording mode.
2. Set the Front Menu to CW Recording mode as follows.

TEST → RF → BS + F8 →
(CURSOR CENTER) → ↓ ↓
→ →

3. Connect the spectrum analyzer probe to TP3.
4. SP USER MENU
   Set the item "HEAD" to A from NOR
5. Adjust VR200 so that the 2ND Harmonics becomes minimum and memorize the VR200 position.
6. Connect the spectrum analyzer probe to TP4.
7. SP USER MENU

   Set the item "HEAD" to B from A

8. Adjust VR200 so that the 2ND Harmonics becomes minimum and memorize the VR200 position.
9. Set the VR200 at certer between item 5 and 8.
10. Press HOME key.

14-1-(2). REC 2nd HARMONICS DISTORTION ADJUSTMENT (2) (REC AMP)

SPEC	MINIMUM 2ND HARMONICS
TEST	TP7 (CH1 A)[B1], TP8 (CH1 B)[B1]
MODE	CW RECORDING
TAPE	SELF RECORDING TAPE
M.EQ	SPECTRUM ANALYZER
INPUT	75% COLOR BAR
ADJ.	VR201[B6]

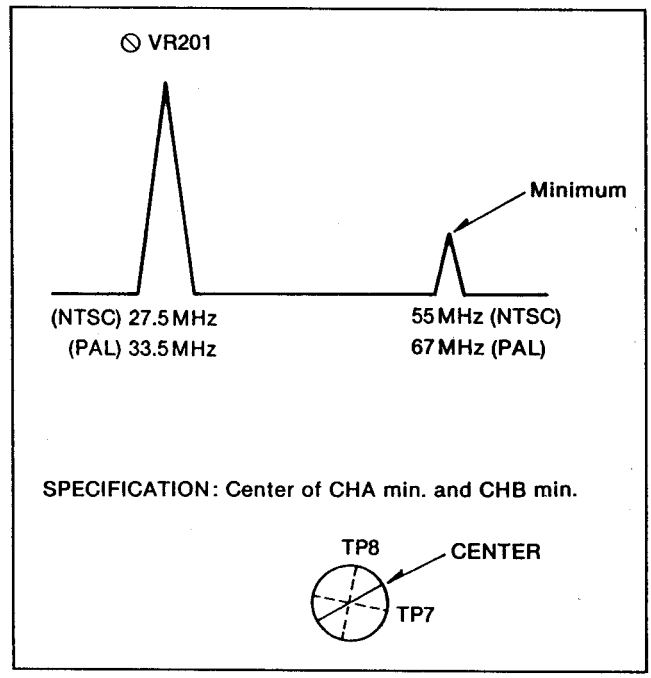

<STEP 1>

Set the spectrum analyzer as follows.
(REG 3)

REFERENCE LEVEL	:	0dBm
ATTEN	:	10dB
DIV (dB/DIV)	:	10dB/div
START FREQUENCY	:	20MHz
STOP FREQUENCY	:	70MHz
RES BW	:	300kHz
VIDEO BW	:	10kHz
SWEEP TIME	:	30m sec
TRIGGER	:	FREE RUM

<STEP 2>

1. Insert a self recording tape to the VTR and set the VTR on Recording mode.
2. Set the Front Menu to CW Recording mode as follows.
   TEST → RF → BS + F8 →
   (CURSOR CENTER) → ↓ ↓
   → →
3. Connect the spectrum analyzer probe to TP7.
4. SP USER MENU
   Set the item "HEAD" to A from NOR
5. Adjust VR201 so that the 2ND Harmonics becomes minimum and memorize the VR201 position.
6. Connect the spectrum analyzer probe to TP8.
7. SP USER MENU
   Set the item "HEAD" to B from A
8. Adjust VR201 so that the 2ND Harmonics becomes minimum and memorize the VR201 position.
9. Set the VR201 at certer between item 5 and 8.
10. Press HOME key.

14-2. REC CURRENT and REC EQUALIZER ADJUSTMENT (CH0) (REC AMP)

SPEC	REFER TO FIGURE
TEST	TP8 (S1 BOARD), TP207 (REC AMP BOARD) → EXT IN
MODE	REC mode
TAPE	75% COLOR BAR ALIGNMENT TAPE SELF RECORDING TAPE
M.EQ	SPECTRUM ANALYZER, 50Ω PROBE WITH CLIP
INPUT	SHUFFLING OFF 75% COLOR BAR ALIGNMENT TAPE
ADJ.	FRONT PANEL REC CURRENT (S MENU) VR2 (CH0 A FREQ), VR4 (CH0 B FREQ)

<STEP 1>
Set the spectrum analyzer as follows.
(REG 4)

REFERENCE LEVEL	:	-10.0dBm
ATTEN	:	10dB
DIV (dB/DIV)	:	5dB/div
START FREQUENCY	:	0Hz
STOP FREQUENCY	:	50MHz
RES BW	:	1MHz
VIDEO BW	:	3kHz
SWEEP TIME	:	300m sec
TRIGGER	:	EXT(HEAD SW)

<STEP 2>
Set the VTR shuffling off, error correction off and error concealment off mode.
L2 SW51-2 (OFF), SW51-3 (OFF)
L3 SW1 (OFF), SW2 (OFF), SW3 (OFF), SW4 (OFF)
L4 SW802 (OFF)

<STEP 3>
1. Connect the spectrum analyzer probe to TP8 on S1 Board.
2. Playback a Shuffling off 75% color bar alignment tape.

<STEP 4>
1. SCOPE CH1 : TP2610 (S4)
   SCOPE CH2 : TP2619 (S4)
2. Set the machine condition as follows.
   VIDEO OUT → SET UP → STATE → [ ](CURSOR CENTER)
   [→] → [→] → [→](EDIT REC) → TAPE → MANUAL EDIT → INSERT
3. Set the VTR PLAY mode.
4. Confirm that the waveform is shown below and the envelope level on the front bar graph panel becomes maximum.
   TEST → SERVO → AT → F4(CENTER) → EXIT → EXIT
   → RF → AT HEIGHT (F7) → BS+F8 → [ ](CURSOR CENTER) → F+[←]
   A and B Heads are selected by cusor key [←] [→].
   If not, adjust Front Panel adjustment knob so that the these two conditions will be satisfied.

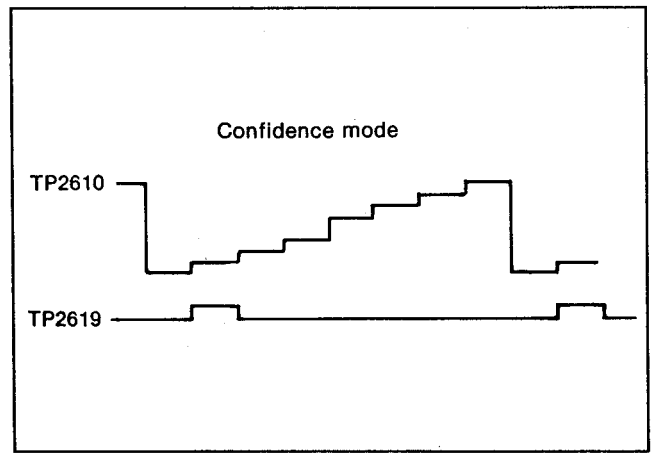

Note: This AT HEIGHT adjustment is tentative adjustment to get maximum envelope in correct AT Trace. Actual AT Adjustment must be done in AT (S4) Adjustment.

<STEP 5>
1. Memorize the frequency characteristics waveform to VIEW B of the spectrum analyzer.
2. Set the machine condition as follows.

   MANUAL EDIT → INSERT (INSERT OFF mode).

Note: STEP 4 and 5 place the AT Heads in the confidence position, when in Playback mode.
The frequency characteristics can then be memorized and compared to the Rec frequency characteristics.

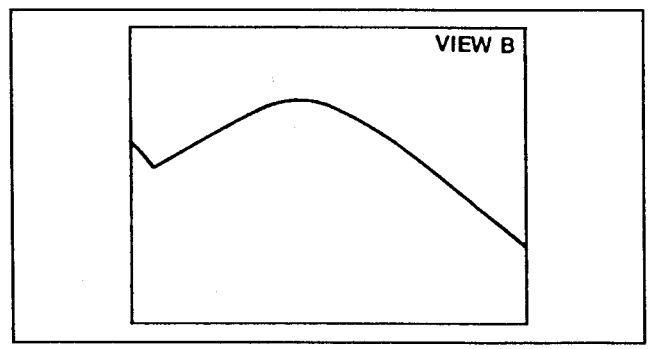

<STEP 6>

1. Eject the alignment tape and insert a self recording tape.
2. Connect the spectrum analyzer probe to TP8 on S1 Board.
3. Set the VTR in Rec mode.
4. Make sure that the AT Head height is correct position to get maximum envelope on CH0 display.
5. Set the FRONT MENU to REC CURRENT mode.

   TEST → RF → F4(REC CURRENT) → BS+F8 → [ ] (CURSOR CENTER) → F+[←]
   CH0 A, CH0 B, CH1 A, CH1 B Heads are selected by cursor key [↑] [↓].
6. Confirm that envelope on the bar graph is still keeping maximum level. If not, back to AT-HEIGHT adjusting menu and readjust Front Panel adjusting knob to get maximum level of envelope.
7. Set spectrum analyzer to REG 5. (refer to set up chart).

<STEP 7>

Adjust the REC Current CH0 A and CH0 B so that the waveform level is same level with the alignment tape play level at 5MHz.

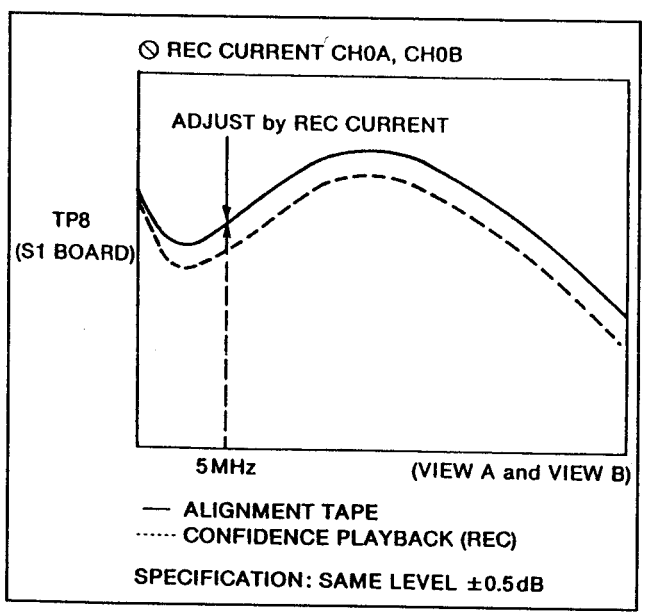

<STEP 8>

1. CH0B Rec Current Adjustment is same as CH0A which is described STEP 6- ~ STEP 7. (Just change the CH).

<STEP 9>

1. Adjust VR2 (CH0 A) and VR4 (CH0 B) so that the waveform level is same at 30MHZ as shown below and confirm that the error rate on the front panel is minimum.
2. If it is not, set the CH0 B to -128 by using adjustment VR on the front panel. And adjust VR2 (CH0 A) so that the error rate is minimum and same level.
3. Adjust VR4 (CH0 B) so that the error rate is minimum by using the same method above.

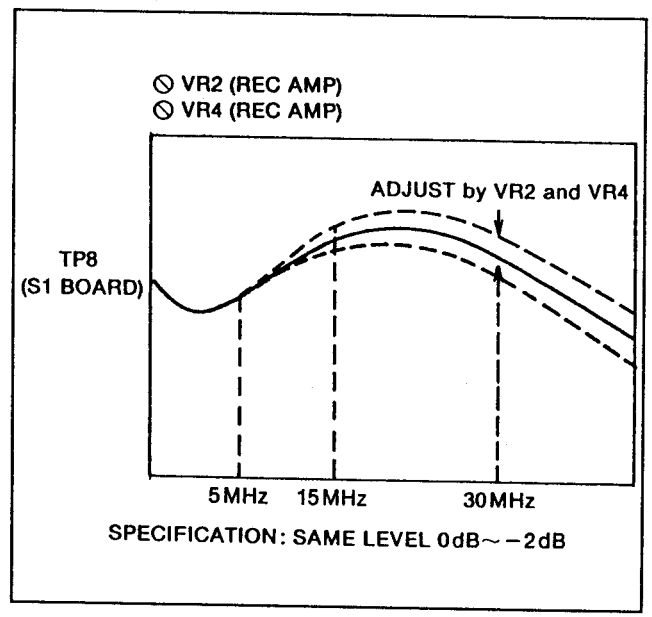

<STEP 10>

1. If level is increased at 30MHz to 35MHz, adjust REC CURRENT CH0 A and CH0 B so that the output level at 5MHz is same level. (A:0).
2. If the level is increased at 5MHz, adjust REC CURRENT CH0 A and CH0 B so that the output level at 5MHz is same increasing value. (a:c).

Caution : Adjustment point of VR2 and VR4 are as shown below.

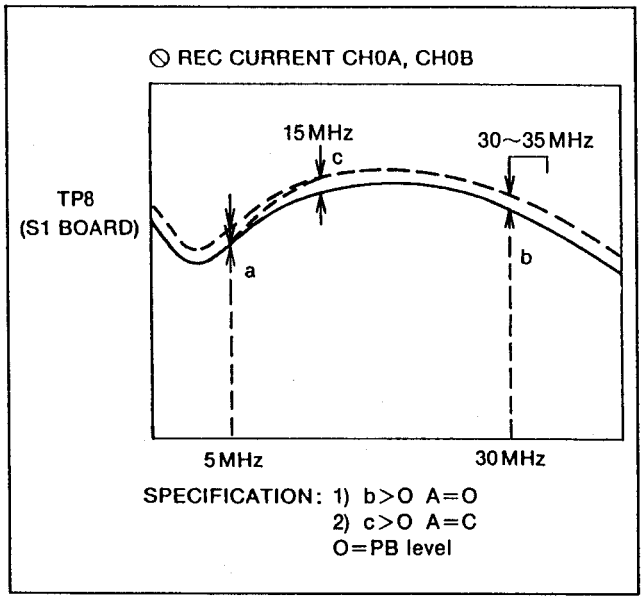

<STEP 11>

1. Set the machine condition as follows.

   VIDEO OUT → SET UP → STATE → [ ](CURSOR CENTER)
   [→] → [→] → [→](EDIT REC) → TAPE → MANUAL EDIT → INSERT

2. Set the VTR PLAY mode.
3. Confirm that the waveform level is same and error rate is minimum.

<STEP 12>

Set the AT HEIGHT Front Menu to all 0.

14-3. REC CURRENT and REC EQUALIZER ADJUSTMENT (CH1) (REC AMP)

SPEC	REFER TO FIGURE
TEST	TP8(S2 BOARD), TP207(S2 BOARD) → EXT IN
MODE	VAR × 1
TAPE	75% COLOR BAR ALIGNMENT TAPE SELF RECORDING TAPE
M.EQ	SPECTRUM ANALYZER, 50Ω PROBE WITH CLIP
INPUT	SHUFFLING OFF 75% COLOR BARALIGNMENT TAPE
ADJ.	FRONT PANEL REC CURRENT (SP MENU) VR7 (CH1 A FREQ), VR9 (CH1 B FREQ)

<STEP 1>

Set the spectrum analyzer as follows.
(REG 4)

REFERENCE LEVEL	:	-10.0dBm
ATTEN	:	10dB
DIV (dB/DIV)	:	5dB/div
START FREQUENCY	:	0Hz
STOP FREQUENCY	:	50MHz
RES BW	:	1MHz
VIDEO BW	:	3kHz
SWEEP TIME	:	300m sec
TRIGGER	:	EXT (HEAD SW)

<STEP 2>

Set the VTR shuffling off, error correction off and error concealment off mode.
L2 SW51-2 (OFF), SW51-3 (OFF)
L3 SW1 (OFF), SW2 (OFF), SW3 (OFF), SW4 (OFF)
L4 SW802 (OFF)

<STEP 3>

1. Connect the spectrum analyzer probe to TP8 on S2 Board.
2. Playback a Shuffling off 75% color bar alignment tape.

<STEP 4>

1. SCOPE CH1 : TP2610 (S4)
   SCOPE CH2 : TP2619 (S4)
2. Set the machine condition as follows.

   VIDEO OUT → SET UP → STATE → [ ](CURSOR CENTER)
   [→] → [→] → [→](EDIT REC) → TAPE → MANUAL EDIT → INSERT

3. Set the VTR PLAY mode.
4. Confirm that the waveform is shown below and the envelope level on the front panel bar graph becomes maximum.
   If not, adjust Front Panel adjustment knob so that the these two conditions will be satisfied.

   TEST → SERVO → AT → F4(CENTER) → EXIT → EXIT → RF → AT HEIGHT → BS+F8 → [ ](CURSOR CENTER) → F+[←]
   A and B Heads are selected by cusor key [←] [→].

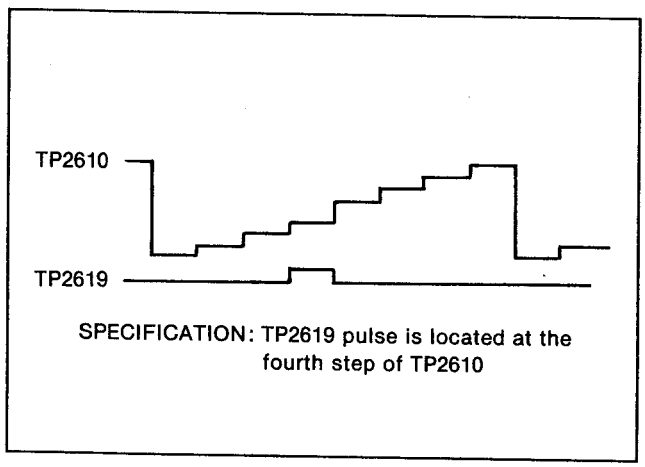

SPECIFICATION: TP2619 pulse is located at the fourth step of TP2610

Note: This AT HEIGHT adjustment is tentative adjustment to get maximum envelope in correct AT Trace. Actual AT Adjustment must be done in AT (S4) Adjustment.

<STEP 5>
1. Memorize the frequency characteristics waveform to VIEW B of the spectrum analyzer.
2. Set the machine condition as follows.
   MANUAL EDIT → INSERT (INSERT OFF mode).

Note: STEP 4 and 5 is place the AT Heads in the confidence position, when in Playback mode. The frequency characteristics can be memorized and compared to the Rec frequency characteristics.

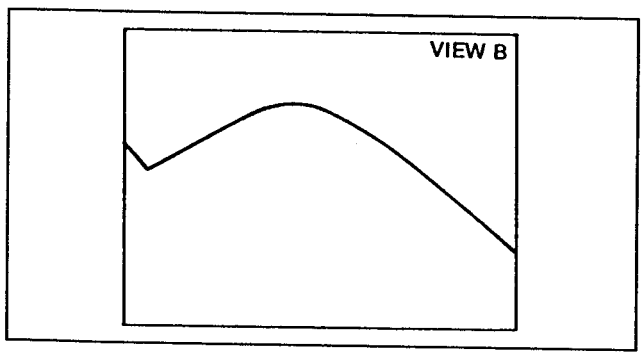

<STEP 6>
1. Eject the alignment tape and insert a self recording tape.
2. Connect the spectrum analyzer probe to TP8 on S2 Board.
3. Set the VTR in Rec mode.
4. Make sure that the AT Head height is correct position. to get maximum envelope on CH1 display.
5. Set the FRONT MENU to REC CURRENT mode.

   TEST → RF → F4(REC CURRENT) → BS+F8 → [ ] (CURSOR CENTER) → F+[←]
   CH0 A, CH0 B, CH1 A, CH1 B Heads are selected by cursor key [↑] [↓].

6. Confirm that envelope on the bar graph is still keeping maximum level. If not, back to AT-HEIGHT adjusting menu and readjust Front Panel adjusting knob to get maximum level of envelope.
7. Set spectrum analyzer to REG 5. (refer to set up chart).

<STEP 7>
Adjust the REC Current CH1 A and CH1 B so that the waveform level is same level with the alignment tape play level at 5MHz.

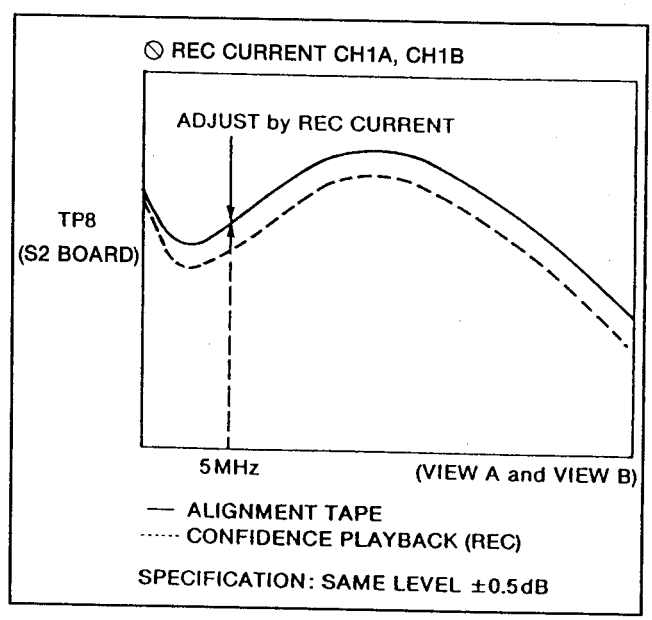

SPECIFICATION: SAME LEVEL ±0.5dB

<STEP 8>
1. CH1B Rec Current Adjustment is same as CH1A which is described STEP 6-3 ~ STEP 7 (Just change the CH).

<STEP 9>
1. Adjust VR7 (CH1 A) and VR9 (CH1 B) so that the waveform level is same at 30MHZ as shown below and confirm that the error rate on the front panel is minimum.
2. If it is not, set the CH1 B to -128 by using adjustment VR on the front panel. And adjust VR7 (CH1 A) so that the error rate is minimum and same level.
3. Adjust VR9 (CH1 B) so that the error rate is minimum by using the same method above.

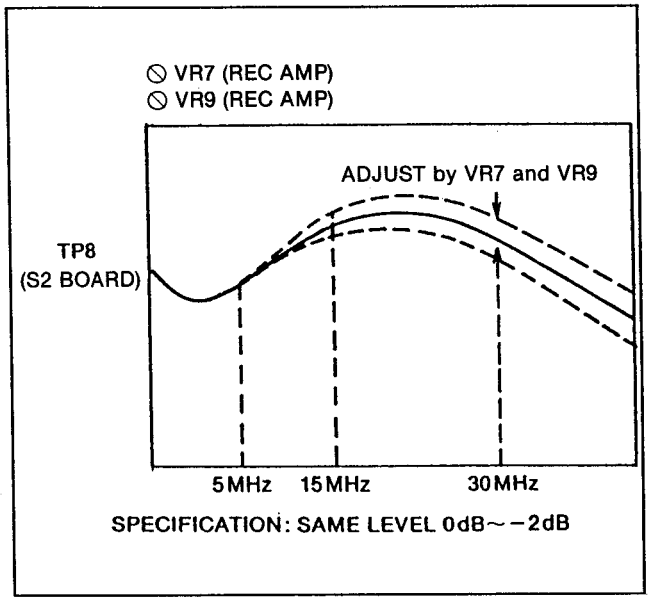

<STEP 10>

1. If level is increased at 30MHz to 35MHz, adjust REC CURRENT CH1 A and CH1 B so that the output level at 5MHz is same level. (A:0).
2. If the level is increased at 5MHz, adjust REC CURRENT CH1 A and CH1 B so that the output level at 5MHz is same increasing value. (a:c).

Caution : Adjust point of VR7 and VR9 are as shown below.

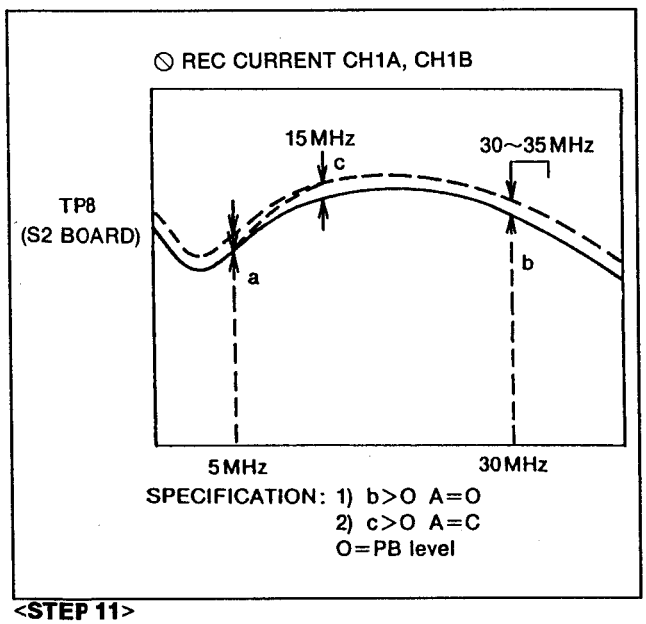

<STEP 11>

1. Set the machine condition as follows.

   VIDEO OUT → SET UP → STATE → [ ](CURSOR CENTER)
   [→] → [→] → [→](EDIT REC) → TAPE → MANUAL EDIT → INSERT

2. Set the VTR PLAY mode.
3. Confirm that the waveform level is same and error rate is minimum.

<STEP 12>

Set the AT HEIGHT Front Menu to all 0.

<STEP 13>

1. Save the REC CURRENT DATA as follows TEST MENU.
   BS + F8 → F9 (Select USER) → F + F11 (SAVE)

Note: When save the data, REC CURRENT data display will be disappeared.

ADJUSTMENT KNOW HOW (INFORMATION)

1. Insert a cassette and place the unit in recording mode.
2. Set the machine condition as follows.

   TEST→RF→REC CURR→[ ](CURSOR CENTER)→ [→] → (REC CURR).
   CH0 A, CH0 B CH1 A or CH1 B Heads are selected by cursor key [↑] [↓].

3. Adjust each CH by using the adjustment VR on the front panel so that the output envelope is maximum and minimum error on the display.

* In confidence mode, if adjust CH0 A, change the CH0 B envelope output. (CHA recording, CHB playback in confidence mode).

4. Adjust VR2, VR4, VR7 and VR9 on the REC AMP board so that the error rate is minimum.
5. After this adjustment check the frequency characteristics waveforms by using the spectrum analyzer. Refer to the item 14-2 and 14-3.
6. This specification is minimum error rate. (Inner Error rate is less than 4 on the display bar.)
7. If out of specification check the frequency characteristic waveform by using the spectrum analyzer. Connect the spectrum analyzer to TP8 on the S1 board and play back the alignment tape (1) and memorize the frequency characteristic waveform.
8. After memorize, place the unit in the recording mode.
9. If output waveform is same as the playback waveform, readjust the VR612 and VR613 so that the output level goes down a few dB level around 40MHz portion and minimum error rate as shown in Figure.

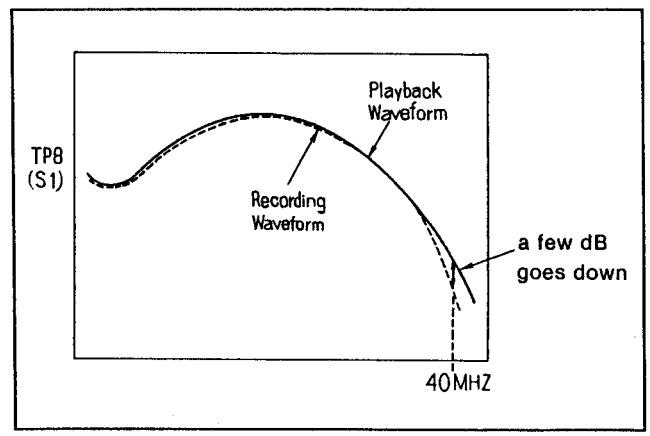

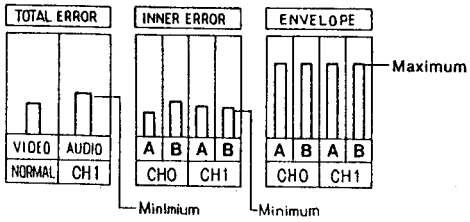

REC CURRENT	
CH0A	+ 110
CH0B	− 120
CH1B	+ 53
CH1A	+ 52

FINAL CONFIRMATION

SPEC	REFER TO FIGURE
TEST	TP8(S1,S2 BOARD), TP207(REC AMP BOARD) → EXT IN
MODE	REC mode
TAPE	SELF RECORDING TAPE
M.EQ	SPECTRUM ANALYZER, 50Ω PROBE WITH CLIP
INPUT	75% COLOR BAR SHUFFLING OFF ALIGNMENT TAPE
ADJ.	FRONT PANEL REC CURRENT (SP MENU) VR2, VR4, VR7, VR9

1. Set the spectrum analyzer as shown item 14-2.
2. Connect the spectrum analyzer to TP8.
3. Connect the EXT input of spectrum analyzer to TP207.
4. Place the unit in the recording mode and memories the frequency characteristics waveform to VIEW B of the spectrum analyzer.
5. Set the Rec current of front panel so that the output spectrum of 5MHz goes down to -5dB.
6. Confirm that the output spectrum as shown in figure.
7. If it is not, readjust the Rec current of front panel and VR2, VR4, VR7 and VR9.

MIX point of Both Spectrum = 30MHz ± 3MHz (NTSC)
35MHz → 3MHz (PAL)

8. Confirm that the error rate is minimum and envelope is maximum at bar graph.

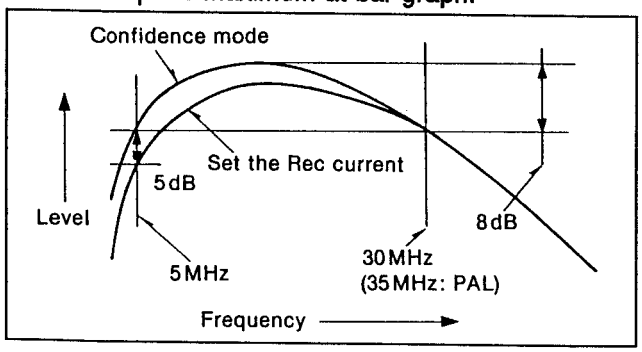

14-4. RF2 ENVELOPE DETECTION ADJUSTMENT

SPEC	MAX. ENVELOPE ON FRONT METER
TEST	FRONT METER OF TEST RF MENU
MODE	PLAY
TAPE	COLOR BAR SECTION OF ALIGNMENT TAPE
M.EQ	400MHz OSCILLOSCOPE
INPUT	
ADJ.	VR10[B3](CH1 OFF), VR12[B3](CH1 GAIN) VR5 [F1], VR11 [G1]

<STEP 1>

1. Set VR11 to center position
2. SCOPE CH1 : TP1
   CH2 : TP207 for Trigger
3. Adjust VR5 so that the DC voltage is 1.5V ± 0.1V.

<STEP 2>

1. Turn the VR10 fully colockwise.
2. Playback the alignment tape color bar portion.
3. Set the tracking FIX mode.

   TEST → RF → TRACKING → FIX

4. Adjust VR12 so that the envelope meter shows 3.0 as shown in figure.
5. Set the tracking variable mode.

   TEST → RF → TRACKING → VAR

   Confirm the envelope meter value is changed when the front panel adjustment VR is turned.

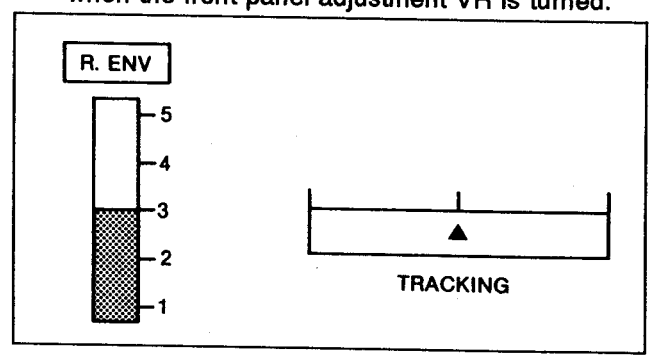

14-5. ROTARY ERASE ADJUSTMENT (REC AMP)

SPEC	REFER TO FIGURE
TEST	TP8 (S1 and S2)[E2], TP205[J5], TP206[K5],
MODE	AUDIO INSERT → VAR X 1
TAPE	BLANK TAPE
M.EQ	400MHz OSCILLOSCOPE
INPUT	75% COLOR BAR to VIDEO IN
ADJ.	VR202[O3], VR203[N1]

<STEP 1>

1. SCOPE CH2 : TP205
   CH3 : TP206
   CH4 : TP207
2. SCOPE TRIGGER : CH4
3. Disconnect the P504 and P511.
4. Set the "AUDIO INSERT" mode on MENU condition.
5. Place the unit in the Audio Insert mode. (PLAY --> REC)
6. Adjust VR202 so that the DC voltage is 10 ± 0.5V DC as shown in Figure.
7. Adjust VR203 so that the DC voltage is 10 ± 0.5V DC as shown in Figure.

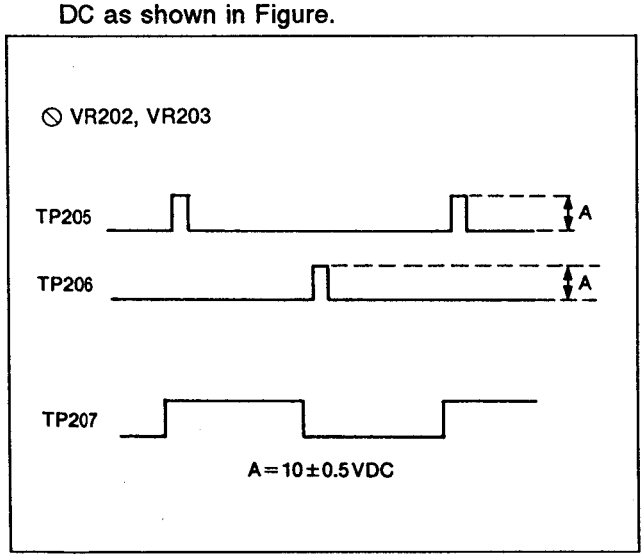

<STEP 2>

1. SCOPE CH1 : TP8/TPG5 (S1 board)
   CH4 : TP207
2. Playback an after adjustment recorded portion on VAR X 1 mode.
3. Confirm that the Audio Block of envelope is erased as shown in Figure.

<STEP 3>

1. SCOPE CH1 : TP8/TPG5 (S2 board)
   CH4 : TP207
2. Confirm that the envelope is within the above specification.
3. Re-connect the P504 and P511.

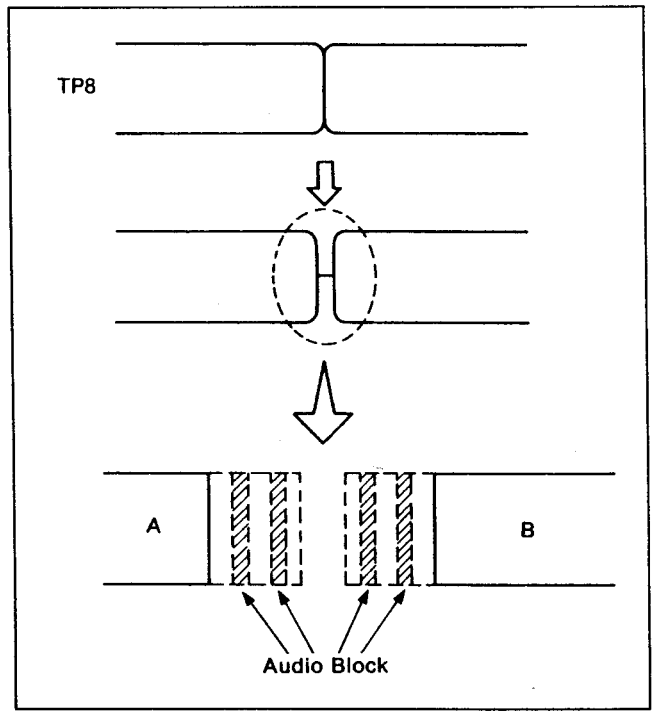

PAL

15. HEAD AMP REGULATOR BOARD

15-1. DC OUTPUT ADJUSTMENT (H.A REGURATOR)

SPEC	SV DC ± 0.1V DC
TEST	TP5
MODE	EJECT
TAPE	
M.EQ	OSCILLOSCOPE
INPUT	COLOR BAR
ADJ.	VR2

<STEP 1>
1. OSCILLOSCOPE : TP5
2. Adjust VR2 so that the adjust DC is 8V DC ± 0.1V DC.

15-2. WAVEFORM SHADER ADJUSTMENT (H.A REGURATOR)

SPEC	AS SHOWN FIGURE
TEST	TP2
MODE	EJECT
TAPE	
M.EQ	OSCILLOSCOPE
INPUT	COLOR BAR
ADJ.	VR1

<STEP 1>
1. OSCILLOSCOPE : TP2
2. Adjust VR1 so that the output waveform is as shown below.

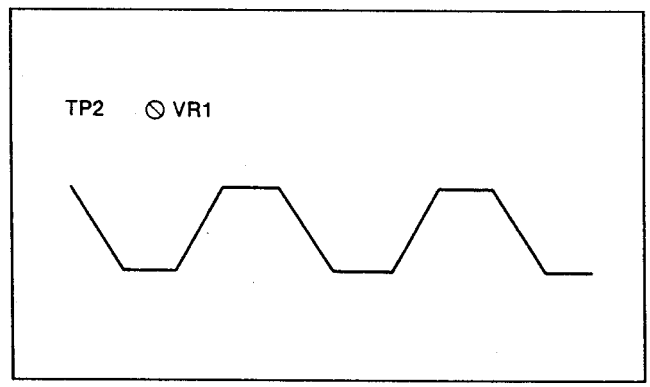

16. VIDEO/AUDIO REC (L2) BOARD

16-1. PLL (1) ADJUSTMENT

SPEC	AS SHOWN FIGURE
TEST	TP8602, TP8601
MODE	PITCH CONTROL ± 15%
TAPE	75% COLOR BAR PORTION ALIGNMENT TAPE
M.EQ	OSCILLOSCOPE
INPUT	
ADJ.	VR8601[B6]

<STEP 1>
1. SCOPE CH1 : TP8602 (TRIGGER)
   CH2 : TP8601
2. MENU CONDITION
   HOME MENU SET UP → PRPL ON
   Set the Program play to ± 15%
3. Confirm that the waveforms are locked as shown in figure.

<STEP 2>
1. If it is not, adjust VR8601 so that the waveform are locked.

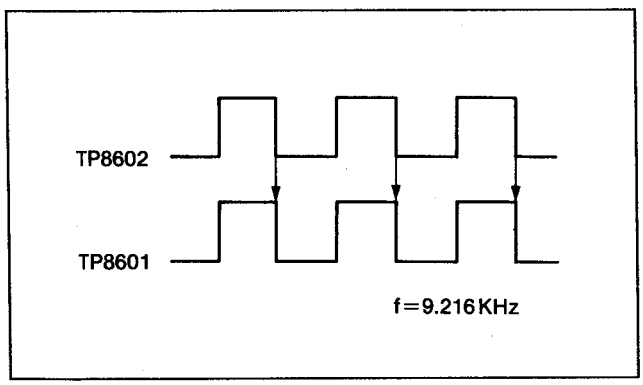

16-2. PLL (2) ADJUSTMENT

SPEC	AS SHOWN FIGURE
TEST	TP8605, TP8604
MODE	PITCH CONTROL ± 15%
TAPE	75% COLOR BAR PORTION ALIGNMENT TAPE
M.EQ	OSCILLOSCOPE
INPUT	
ADJ.	VR8602[D5]

<STEP 1>
1. SCOPE CH1 : TP8605 (TRIGGER)
   CH2 : TP8604
2. MENU CONDITION

   HOME MENU SET UP → PRPL ON
   Set the Program play to ± 15%
3. Confirm that the waveforms are locked as shown in figure.

<STEP 2>
1. If it is not, adjust VR8602 so that the waveform are locked.

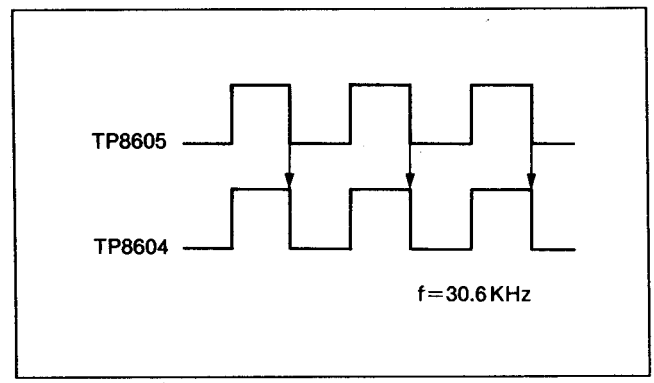

16-3. PLL (3) ADJUSTMENT

SPEC	AS SHOWN FIGURE
TEST	TP8608, TP8607
MODE	PITCH CONTROL ± 15%
TAPE	75% COLOR BAR PORTION ALIGNMENT TAPE
M.EQ	OSCILLOSCOPE
INPUT	
ADJ.	VR8603[D4]

<STEP 1>
1. SCOPE CH1 : TP8608 (TRIGGER)
   CH2 : TP8607
2. MENU CONDITION
   HOME MENU SET UP → PRPL ON
   Set the Program play to ± 15%
3. Confirm that the waveforms are locked as shown in figure.

<STEP 2>
1. If it is not, adjust VR8603 so that the waveform are locked.

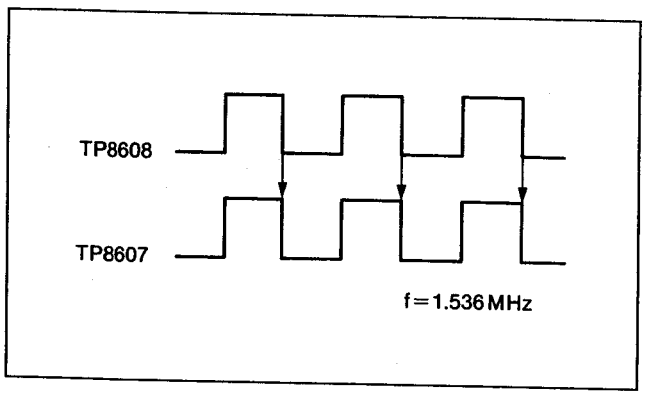

17. SYSTEM CONTROL (S7) BOARD

SPEC	2.00V ± 0.01V
TEST	TP1[B3]
MODE	EJECT
TAPE	
M.EQ	OSCILLOSCOPE
INPUT	
ADJ.	VR1[A4]

<STEP 1>
1. MENU CONDITION
   TEST → RF → REC CNT → (cursor center)
2. Memorize the REC current value and adjust the REC current value are +127 on the every channels.

<STEP 2>
1. SCOPE CH1 : TP1
2. Adjust VR1 so that the output level is 2.00V ± 0.01VDC.
3. Reset the REC current value to original position.

SPECTRUM ANALYZER SETUP
(MODEL HP8591A)

1. SETUP --- REG 1

ITEM	PARAMETER
(1) REF LEVEL	0dBm
(2) ATTEN	10dB
(3) DIV (dB/DIV)	10dB/div
(4) CENTER FREQUENCY	27.5MHz
(5) FREQUENCY SPAN	10MHz
(6) RES BW	100kHz
(7) VIDEO BW	3kHz
(8) SWEEP TIME	300msec
(9) TRIGGER	EXT (HEAD SW)
(10) VID AVG	30

2. SETUP --- REG 2

ITEM	PARAMETER
(1) REF LEVEL	0dBm
(2) ATTEN	10dB
(3) DIV (dB/DIV)	10dB/div
(4) CENTER FREQUENCY	27.5MHz
(5) FREQUENCY SPAN	10MHz
(6) RES BW	100kHz
(7) VIDEO BW	3kHz
(8) SWEEP TIME	300msec
(9) TRIGGER	EXT (HEAD SW)
(10) VID AVG	30

3. SETUP --- REG 3

ITEM	PARAMETER
(1) REF LEVEL	0dBm
(2) ATTEN	10dB
(3) DIV (dB/DIV)	10dB/div
(4) START FREQUENCY	20MHz
(5) STOP FREQUENCY	70MHz
(6) RES BW	300kHz
(7) VIDEO BW	3kHz
(8) SWEEP TIMER	30msec
(9) TRIGGER	FREE RUM

4. SETUP --- REG 4

ITEM	PARAMETER
(1) REF LEVEL	-10dBm
(2) ATTEN	10dB
(3) DIV (dB/DIV)	5dB/div
(4) START FREQUENCY	0MHz
(5) STOP FRQUENCY	50MHz
(6) RES BW	1MHz
(7) VIDEO BW	3kHz
(8) SWEEP TIME	300msec
(9) TRIGGER	EXT (HEAD SW)
(10) VID AVG	10

5. SETUP --- REG 5

ITEM	PARAMETER
(1) REF LEVEL	-20dBm
(2) ATTEN	10dB
(3) DIV (dB/DIV)	5dB/div
(4) START FREQUENCY	0MHz
(5) STOP FREQUENCY	50MHz
(6) RES BW	1kHz
(7) VIDEO BW	3kHz
(8) SWEEP TIME	300msec
(9) TRIGGER	EXT (HEAD SW)

6. SETUP --- REG 6

ITEM	PARAMETER
(1) REF LEVEL	-15dBm
(2) ATTEN	10dB
(3) DIV (dB/DIV)	5dB/div
(4) START FREQUENCY	27.5MHz
(5) STOP FREQUENCY	0MHz
(6) RES BW	1MHz
(7) VIDEO BW	3kHz
(8) SWEEP TIME	200msec
(9) TRIGGER	EXT (HEAD SW)
(10)VID AVG	5

Service Manual

Abbreviations
and
IC Informations

Panasonic
Broadcast Systems

P.C.BOARD PIN ABBREVIATIONS

CONTENTS

P001 (L1) ---------- 4-A- 1
P002 (L1) ---------- 4-A- 1
P003 (L2) ---------- 4-A- 4
P004 (L2) ---------- 4-A- 4
P005 (L3) ---------- 4-A- 7
P006 (L3) ---------- 4-A- 7
P007 (L4) ---------- 4-A-10
P008 (L4) ---------- 4-A-10
P201 (S1) ---------- 4-A-13
P202 (S1) ---------- 4-A-13
P203 (S2) ---------- 4-A-16
P204 (S2) ---------- 4-A-16
P205 (S3) ---------- 4-A-19
P206 (S3) ---------- 4-A-19
P207 (S4) ---------- 4-A-22
P208 (S4) ---------- 4-A-22
P209 (S5) ---------- 4-A-25
P210 (S5) ---------- 4-A-25
P211 (S6) ---------- 4-A-28
P212 (S6) ---------- 4-A-28
P213 (S7) ---------- 4-A-31
P214 (S7) ---------- 4-A-31
P215 (S8) ---------- 4-A-34
P216 (S8) ---------- 4-A-34
P217 (S9) ---------- 4-A-37
P218 (S9) ---------- 4-A-37

P.C.BOARD PIN ABBREVIATIONS

P001 A (L1)				
NO.	PIN NAME	I/O	FUNCTION	REMARKS
1	GND (A)		GND (ANALOG CIRCUIT)	
2	+12V (A)		+12V (ANALOG CIRCUIT)	
3	-12V (A)		-12V (ANALOG CIRCUIT)	
4	GND (A)		GND (ANALOG CIRCUIT)	
5	+8V (UN)		+8V (UNREGULATED)	
6	-8V (UN)		-8V (UNREGULATED)	
7	+15V (UN)		+15V (UNREGULATED)	
8	-15V (UN)		-15V (UNREGULATED)	
9	GND (A)			
10	CH1 IN G		CH1 LINE IN GND	
11	CH2 IN G		CH2 LINE IN GND	
12	CH3 IN G		CH3 LINE IN GND	
13	CH4 IN G		CH4 LINE IN GND	
14	GND (A)			
15	CH1 OUT	O	CH1 LINE OUT	
16	GND (A)		CH1 LINE OUT GND	
17	CH4 OUT	O	CH4 LINE OUT	
18	GND (A)		CH4 LINE OUT GND	
19	GND (A)			
20				
21				
22				
23				
24	AV AB 13	I	AV ADDRESS BUS	
25	AV AB 10	I	AV ADDRESS BUS	
26	AV AD 7	I	AV ADDRESS DATA BUS	
27	AV AD 4	I	AV ADDRESS DATA BUS	
28	AV AD 1	I	AV ADDRESS DATA BUS	
29	AV RD	I	AV READ	
30				
31				
32	GND (D)		GND (DIGITAL CIRCUIT)	

P002 A' (L1)				
NO.	PIN NAME	I/O	DESCRIPTION	REMARKS
1	GND (D)		GND (DIGITAL CIRCUIT)	
2	DSD 1	I	SERIAL DATA INPUT CH1/CH2	
3				
4	ASD 1	O	SERIAL DATA OUTPUT CH1/CH2	
5				
6				
7				
8				
9				
10				
11	AV DATA 5	I	VIDEO DAC INPUT	
12	AV DATA 2	I	VIDEO DAC INPUT	
13	AV DATA -1	I	VIDEO DAC INPUT	
14	AV CLK	I	VIDEO DAC CLK IN	
15	GND (A)		GND (ANALOG CIRCUIT)	
16	RET V	I	INCOME VIDEO INPUT	
17	GND (A)		GND (ANALOG CIRCUIT)	
18	V1 OUT	O	VIDEO 1 OUTPUT	
19	GND (A)		GND (ANALOG CIRCUIT)	
20	WFM OUT	O	WFM OUTPUT	
21	GND (A)		GND (ANALOG CIRCUIT)	
22	GND (A)			
23				
24				
25				
26				
27	GND (D)		GND (DIGITAL CIRCUIT)	
28	+5V (D)		+5V (DIGITAL CIRCUIT)	
29	+5V (D)		+5V (DIGITAL CIRCUIT)	
30	-5V (D)		-5V (DIGITAL CIRCUIT)	
31	GND (D)		GND (DIGITAL CIRCUIT)	
32	GND (D)		GND (DIGITAL CIRCUIT)	

P001 B (L1)				
NO.	PIN NAME	I/O	FUNCTION	REMARKS
1	GND (A)		GND (ANALOG CIRCUIT)	
2	+12V (A)		+12V (ANALOG CIRCUIT)	
3	-12V (A)		-12V (ANALOG CIRCUIT)	
4	GND (A)		GND (ANALOG CIRCUIT)	
5	+8V (UN)		+8V (UNREGULATED)	
6	-8V (UN)		-8V (UNREGULATED)	
7	+15V (UN)		+15V (UNRAGURETED)	
8	-15V (UN)		-15V (UNREGULATED)	
9	GND (A)		GND (ANALOG CIRCUIT)	
10	CH1 IN C	I	CH1 LINE IN COLD	
11	CH2 IN C	I	CH2 LINE IN COLD	
12	CH3 IN C	I	CH3 LINE IN COLD	
13	CH4 IN C	I	CH4 LINE IN COLD	
14	GND (A)		GND (ANALOG CIRCUIT)	
15	CH2 OUT	O	CH2 LINE OUT	
16	GND (A)		CH2 LINE OUT GND	
17	MOL OUT	O	MONITOR L OUT	
18	GND (A)		MONITOR L OUT GND	
19	GND (A)		GND (ANALOG CIRCUIT)	
20				
21	AMCK	I	ANALOG AUDIO MASTER CLOCK	
22	AMCK L	I	ANALOG AUDIO MASTER CLOCK LOW	
23	ABCK	I	ANALOG AUDIO BIT CLOCK	
24	AV AB 14	I	AV ADDRESS BUS	
25	AV AB 11	I	AV ADDRESS BUS	
26	AV AB 8	I	AV ADDRESS BUS	
27	AV AD 5	I	AV ADDRESS DATA BUS	
28	AV AD 2	I	AV ADDRESS DATA BUS	
29	AV ALE	I	AV ADDRESS LOAD ENABLE	
30	AV RESET	I	AV RESET	
31				
32	GND (D)		GND (DIGITAL CIRCUIT)	

P002 B' (L1)				
NO.	PIN NAME	I/O	DESCRIPTION	REMARKS
1	GND (D)		GND (DIGITAL CIRCUIT)	
2				
3	DSD L	I	SERIAL DATA INPUT L/R	
4				
5				
6				
7				
8				
9				
10				
11	AV DATA 6	I	VIDEO DAC INPUT	
12	AV DATA 3	I	VIDEO DAC INPUT	
13	AV DATA 0	I	VIDEO DAC INPUT	
14	AV CLK L	I	VIDEO DAC CLK INPUT	
15	GND (A)		GND (ANALOG CIRCUIT)	
16	RF IN		USING FOR RF WFM	
17	GND (A)		GND (ANALOG CIRCUIT)	
18	V2 OUT		VIDEO 2 OUTPUT	
19	GND (A)		GND (ANALOG CIRCUIT)	
20	CHAR DAT		CHARACTER DATA FOR SUPER	
21	GND (A)		GND (ANALOG CIRCUIT)	
22	GND (A)		GND (ANALOG CIRCUIT)	
23				
24				
25				
26				
27	GND (D)		GND (DIGITAL CIRCUIT)	
28	+5V (D)		+5V (DIGITAL CIRCUIT)	
29	+5V (D)		+5V (DIGITAL CIRCUIT)	
30	-5V (D)		-5V (DIGITAL CIRCUIT)	
31	GND (D)		GND (DIGITAL CIRCUIT)	
32	GND (D)		GND (DIGITAL CIRCUIT)	

P001 C (L1)				
NO.	PIN NAME	I/O	FUNCTION	REMARKS
1	GND (A)		GND (ANALOG CIRCUIT)	
2	+12V (A)		+12V (ANALOG CIRCUIT)	
3	-12V (A)		-12V (ANALOG CIRCUIT)	
4	GND (A)		GND (ANALOG CIRCUIT)	
5	+8V (UN)		+8V (UNREGULATED)	
6	-8V (UN)		-8V (UNREGULATED)	
7	+15V (UN)		+15V (UNREGULATED)	
8	-15V (UN)		-15V (UNREGULATED)	
9	GND (A)		GND (ANALOG CIRCUIT)	
10	CH1 IN H	I	CH1 LINE IN HOT	
11	CH2 IN H	I	CH2 LINE IN HOT	
12	CH3 IN H	I	CH3 LINE IN HOT	
13	CH4 IN H	I	CH4 LINE IN HOT	
14	GND (A)		GND (ANALOG CIRCUIT)	
15	CH3 OUT	O	CH3 LINE OUT	
16	GND (A)		CH3 LINE OUT GND	
17	MOR OUT	O	MONITOR R OUT	
18	GND (A)		MONITOR R OUT GND	
19	GND (A)		GND (ANALOG CIRCUIT)	
20				
21				
22				
23	AWCK	I	ANALOG AUDIO WORD CLOCK	
24	AV AB 15	I	AV ADDRESS BUS	
25	AV AB 12	I	AV ADDRESS BUS	
26	AV AB 9	I	AV ADDRESS BUS	
27	AV AD 6	I	AV ADDRESS DATA BUS	
28	AV AD 3	I	AV ADDRESS DATA BUS	
29	AV AD 0	I	AV ADDRESS DATA BUS	
30	AV WR	I	AV WRITE	
31				
32	GND (D)		GND (DIGITAL CIRCUIT)	

P002 C' (L1)				
NO.	PIN NAME	I/O	DESCRIPTION	REMARKS
1	GND (D)		GND (DIGITAL CIRCUIT)	
2	DSD 3	I	SERIAL DATA INPUT CH3/CH4	
3				
4	ASD 3	O	SERIAL DATA OUTPUT CH3/CH4	
5				
6				
7				
8				
9	SYNC BLK		SYNC BLANKING	
10	BURST FL		CLAMP PULSE (BURST FLAG)	
11	AV DATA 7	I	VIDEO DAC INPUT	
12	AV DATA 4	I	VIDEO DAC INPUT	
13	AV DATA 1	I	VIDEO DAC INPUT	
14	AV DATA -2	I	VIDEO DAC INPUT	
15	GND (A)		GND (ANALOG CIRCUIT)	
16	CTL IN		USING FOR CTL WFM	
17	GND (A)		GND (ANALOG CIRCUIT)	
18	V3 OUT		VIDEO 3 OUTPUT	
19	GND (A)		GND (ANALOG CIRCUIT)	
20	CHAR GAT		CHARACTER GATE FOR SUPER	
21	GND (A)		GND (ANALOG CIRCUIT)	
22	GND (A)		GND (ANALOG CIRCUIT)	
23				
24				
25				
26				
27	GND (D)		GND (DIGITAL CIRCUIT)	
28	+5V (D)		+5V (DIGITAL CIRCUIT)	
29	+5V (D)		+5V (DIGITAL CIRCUIT)	
30	-5V (D)		-5V (DIGITAL CIRCUIT)	
31	GND (D)		GND (DIGITAL CIRCUIT)	
32	GND (D)		GND (DIGITAL CIRCUIT)	

P003 A (L2)				
NO.	PIN NAME	I/O	FUNCTION	REMARKS
1	GND (A)		GND (ANALOG CIRCUIT)	
2	+12V (A)		+12V (ANALOG CIRCUIT)	
3	-12V (A)		-12V (ANALOG CIRCUIT)	
4	GND (A)		GND (ANALOG CIRCUIT)	
5	DIF CK	I	DIGITAL INTERFACE CLOCK (POS)	
6	DIF CK (NEG)	I	DIGITAL INTERFACE CLOCK (NEG)	
7	INCOM HA	O	INCOME H RESET	
8	INCOM FNO	O	INCOME FIELD NO	
9	BYP1 4FSC		BYPASS 1 4FSC (POS)	
10	BYP1 4FSC (NEG)		BYPASS 1 4FSC (NEG)	
11	REF H0		REF H OUT	
12	REF CS	I	REF COMPOSITE SYNC	
13	H RST		H RESET	
14	INCOM CS		INCOME COMPOSITE SYNC	
15	BYP2 4FSC		BYPASS 2 4 FSC	
16	BYP2 4FSC (NEG)		BYBASS 2 4 FSC LOW	
17	AU DATA IN 5	I	AUDIO REC DATA	
18	AU DATA IN 2	I	AUDIO REC DATA	
19	AU DATA GND		AUDIO REC DATA GND	
20				
21				
22				
23	FSD	I	DIGITAL IF SAMDLING CLOCK	
24	AV AB 13	I	AV ADDRESS BUS	
25	AV AB 10	I	AV ADDRESS BUS	
26	AV AD 7	I	AV ADDRESS DATA BUS	
27	AV AD 4	I	AV ADDRESS DATA BUS	
28	AV AD 1	I	AV ADDRESS DATA BUS	
29	AV RD	I	AV READ	
30	ST 0	I	STATUS DATA 0	
31	ST 1	I	STATUS DATA 1	
32	GND (D)		GND (DIGITAL CIRCUIT)	

P004 A' (L2)				
NO.	PIN NAME	I/O	DESCRIPTION	REMARKS
1	GND (D)		GND (DIGITAL CIRCUIT)	
2	DV DATA IN 5	I	DIGITAL VIDEO DATA IN	
3	DV DATA IN 2	I	DIGITAL VIDEO DATA IN	
4	DV DATA IN -1	I	DIGITAL VIDEO DATA IN	
5	DV CLK I	I	DIGITAL VIDEO CLOCK	
6	NC.			
7	GND (D)		GND (DIGITAL CIRCUIT)	
8	AV CS		ANALOG VIDEO COMPOSITE SYNC POS	
9	AV CS (NEG)		ANALOG VIDEO COMPOSITE SYNC NEG	
10	AV DATA IN 5	I	ANALOG VIDEO DATA IN (POS)	
11	AV DATA IN 5 (NEG)	I	ANALOG VIDEO DATA IN (NEG)	
12	AV DATA IN 2	I	ANALOG VIDEO DATA IN (POS)	
13	AV DATA IN 2 (NEG)	I	ANALOG VIDEO DATA IN (NEG)	
14	AV CLK I	I	ANALOG VIDEO CLOCK (POS)	
15	AV CLK I (NEG)	I	ANALOG VIDEO CLOCK (NEG)	
16	AV SC	I	ANALOG VIDEO SUB CARRIER (POS)	
17	AV SC (NEG)	I	ANALOG VIDEO SUB CARRIER (NEG)	
18	AV HO		AV H OUT (POS)	
19	AV HO (NEG)		AV H OUT (NEG)	
20	CH0 REC D	O	CH0 REC DATA (POS)	
21	CH0 REC D (NEG)	O	CH0 REC DATA (NEG)	
22	CH0 REC D GND		CH0 REC DATA GND	
23	BYP 9	O	BYPASS 9	
24	BYP 6	O	BYPASS 9	
25	BYP 3	O	BYPASS 9	
26	BYP 0	O	BYPASS 9	
27	GND (D)		GND (DIGITAL CIRCUIT)	
28	+5V (D)		+5V (DIGITAL CIRCUIT)	
29	+5V (D)		+5V (DIGITAL CIRCUIT)	
30	-5V (D)		-5V (DIGITAL CIRCUIT)	
31	GND (D)		GND (DIGITAL CIRCUIT)	
32	GND (D)		GND (DIGITAL CIRCUIT)	

P003 B (L2)				
NO.	PIN NAME	I/O	FUNCTION	REMARKS
1	GND (A)		GND (ANALOG CIRCUIT)	
2	+12V (A)			
3	-12V (A)			
4	GND (A)			
5	MCK	O	AUDIO MASTER CLOCK (POS)	
6	MCK (NEG)	O	AUDIO MASTER CLOCK (NEG)	
7	INCOM REC SW	I	INCOME REC SWITCH	
8	INCOM FN 1	O	INCOME FIELD NO.1	
9	PCON CLK		PITCH CONTROL CLOCK	
10	PCON CLK GND		PITCH CONTROL CLOCK	
11	REF FRM		REFERENCE FRAME	
12	REF VS	I	REFERENCE VERTICAL SYNC	
13	FSA	O	AUDIO SAMPLING CLOCK	
14	INCOM LALT	I	INCOME LINE ALTERNATE	
15	BYP2 2FSC	O	BYPASS 2 2FSC (POS)	
16	BYP2 2FSC (NEG)	O	BYPASS 2 2FSC (NEG)	
17	AU DATA IN 6	I	AUDIO REC DATA	
18	AU DATA IN 3	I	AUDIO REC DATA	
19	AUDATA IN 0	I	AUDIO REC DATA	
20	DBCK	O	AUDIO MASTER CLOCK	
21	AMCK	O	ANALOG AUDIO MASTER CLOCK (POS)	
22	AMCK (NEG)	O	ANALOG AUDIO MASTER CLOCK (NEG)	
23	ABCK	O	ANALOG AUDIO BIT CLOCK	
24	AV AB 14	I	AV ADDRESS BUS	
25	AV AB 11	I	AV ADDRESS BUS	
26	AV AB 8	I	AV ADDRESS BUS	
27	AV AD 5	I	AV ADDRESS DATA BUS	
28	AV AD 2	I	AV ADDRESS DATA BUS	
29	AV ALE	I	AV ADDRESS LOAD ENABLE	
30	AV RESET	I	AV RESET	
31	ST 2	I	STATUS DATA 2	
32	GND (D)		GND (DIGITAL CIRCUIT)	

P004 B' (L2)				
NO.	PIN NAME	I/O	DESCRIPTION	REMARKS
1	GND (D)		GND (DIGITAL CIRCUIT)	
2	DV DATA IN 6	I	DIGITAL VIDEO DATA IN 6	
3	DV DATA IN 3	I	DIGITAL VIDEO DATA IN 3	
4	DV DATA IN 0	I	DIGITAL VIDEO DATA IN 0	
5	DV CLK I L	I	DIGITAL VIDEO CLK L	
6	REC COMP SYNC			
7	REC V SYNC			
8	REC H SW			
9	REC H SW GND			
10	AV DATA IN 6	I	ANALOG VIDEO DATA IN 6	
11	AV DATA IN 6 (NEG)	I	ANALOG VIDEO DATA IN 6 (NEG)	
12	AV DATA IN 3	I	ANALOG VIDEO DATA IN 3	
13	AV DATA IN 3 (NEG)	I	ANALOG VIDEO DATA IN 3 (NEG)	
14	AV DATA IN 0	I	ANALOG VIDEO DATA IN 0	
15	AV DATA IN 0 (NEG)	I	ANALOG VIDEO DATA IN 0 (NEG)	
16	AV VS		ANALOG VIDEO V SYNC	
17	AV FRM		ANALOG VIDEO FRAME	
18	FLY ERASE		FLYING ERASE	
19	FV/2		FRAME PULSE	
20	CH1 REC D	O	CH1 REC DATA	
21	CH1 REC D (NEG)	O	CH1 REC DATA LOW	
22	CH1 REC D GND			
23	BYP 10	O	BYPASS 10	
24	BYP 7	O	BYPASS 7	
25	BYP 4	O	BYPASS 4	
26	BYP 1	O	BYPASS 1	
27	GND (D)		GND (DIGITAL CIRCUIT)	
28	+5V (D)		+5V (DIGITAL CIRCUIT)	
29	+5V (D)		+5V (DIGITAL CIRCUIT)	
30	-5V (D)		-5V (DIGITAL CIRCUIT)	
31	GND (D)		GND (DIGITAL CIRCUIT)	
32	GND (D)		GND (DIGITAL CIRCUIT)	

P003 C (L2)				
NO.	PIN NAME	I/O	FUNCTION	REMARKS
1	GND (A)			
2	+12V (A)			
3	-12V (A)			
4	GND (A)			
5	PB RST	I	PLAYBACK RESET	
6	PB FLD	I	PLAYBACK FIELD	
7	PB 5F	I	PLAYBACK LEAP FIELD	
8	INCOM FN 2	O	INCOME FIELD NO.2	
9	REC FNO DL		REC FIELD NO.Ø DELAY	
10	FN Ø		REC FIELD NO.Ø	
11	REC CF		REC COLOR FRAMING	
12	REF CLK	I	REFERENCE CLOCK	
13	REF CLK (NEG)	I	REFERENCE CLOCK (NEG)	
14	INCOM SC		INCOME SUB CARRIER	
15	BYP3 WCK	O	BYPASS 3 WRITE CLOCK	
16	BYP3 WCK (NEG)	O	BYPASS 3 WRITE CLOCK LOW	
17	AU DATA IN 7	I	AUDIO DATA IN	
18	AU DATA IN 4	I	AUDIO DATA IN	
19	AU DATA IN 1	I	AUDIO DATA IN	
20	DBCK L	O	AUDIO MASTER CLOCK LOW	
21	AWCK	O	ANALOG AUDIO WORD CLOCK	
22	FS 128	O	FS* 128	
23	SEL REC SW		SELECT REC SWITCH	
24	AV AB 15	I	AV ADDRESS BUS	
25	AV AB 12	I	AV ADDRESS BUS	
26	AV AB 9	I	AV ADDRESS BUS	
27	AV AD 6	I	AV ADDRESS DATA BUS	
28	AV AD 3	I	AV ADDRESS DATA BUS	
29	AV AD 0	I	AV ADDRESS DATA BUS	
30	AV WR	I	AV WRITE	
31	ST 3	I	STATUS DATA 3	
32	GND (D)		GND (DIGITAL CIRCUIT)	

P004 C' (L2)				
NO.	PIN NAME	I/O	DESCRIPTION	REMARKS
1	GND (D)		GND (DIGITAL CIRCUIT)	
2	DV DATA IN 7	I	DIGITAL VIDEO DATA IN 7	
3	DV DATA IN 4	I	DIGITAL VIDEO DATA IN 4	
4	DV DATA IN 1	I	DIGITAL VIDEO DATA IN 1	
5	REF REC SW	I	REFERENCE REC SWITCH	
6	REC VITC			
7	VITC GATE			
8	REC CF	I	REC COLOR FRAMING	
9	EXT CF IN	I	EXTERNAL COLOR FRAME IN	
10	AV DATA IN 7	I	ANALOG VIDEO DATA IN 7	
11	AV DATA IN 7 (NEG)	I	ANALOG VIDEO DATA IN 7 (NEG)	
12	AV DATA IN 4	I	ANALOG VIDEO DATA IN 4	
13	AV DATA IN 4 (NEG)	I	ANALOG VIDEO DATA IN 4 (NEG)	
14	AV DATA IN 1	I	ANALOG VIDEO DATA IN 1	
15	AV DATA IN 1 (NEG)	I	ANALOG VIDEO DATA IN 1 (NEG)	
16	AV LALT	I	AV LINE ALTERNATE	
17	AV CF	I	ANALOG VIDEO CF	
18	CH0 REC	O		
19	CH1 REC	O		
20	REC CLK	I		
21	REC CLK (NEG)	I		
22	REC CLK GND			
23	BYP 11	O	BYPASS 11	
24	BYP 8	O	BYPASS 8	
25	BYP 5	O	BYPASS 5	
26	BYP 2	O	BYPASS 2	
27	GND (D)		GND (DIGITAL CIRCUIT)	
28	+5V (D)		+5V (DIGITAL CIRCUIT)	
29	+5V (D)		+5V (DIGITAL CIRCUIT)	
30	-5V (D)		-5V (DIGITAL CIRCUIT)	
31	GND (D)		GND (DIGITAL CIRCUIT)	
32	GND (D)		GND (DIGITAL CIRCUIT)	

P005 A (L3)				
NO.	PIN NAME	I/O	FUNCTION	REMARKS
1	GND (A)		GND (ANALOG CIRCUIT)	
2	+12V (A)		+12V (ANALOG CIRCUIT)	
3	-12V (A)		-12V (ANALOG CIRCUIT)	
4	GND (A)		GND (ANALOG CIRCUIT)	
5				
6				
7	VALID F	O	VALID FLAG	
8	PB FLD	O	PLAYBACK FIELD	
9	SEGU 0	O	SEGMENT	
10	SEGM VAGUE	O	SEGMENT VAGUE	
11	SYNC + CH0			
12	SYNC - CH0			
13				
14				
15	BYP2 4FSC	I	BYPASS 4FSC	
16	BYP2 4FSC (NEG)	I	BYPASS 4FSC (NEG)	
17	TEST EE 2	I		
18	PB DATA CH0	I		
19	PB CLOCK CH0	I		
20	PB DATA CH1	I		
21	PB CLOCK CH1	I		
22	ENV DET CH0		ENVELOPE DETECT CH0	
23	ENV DET CH1		ENVELOPE DETECT CH1	
24	AV AB 13	I	AV ADDRESS BUS	
25	AV AB 10	I	AV ADDRESS BUS	
26	AV AD 7	I	AV ADDRESS DATA BUS	
27	AV AD 4	I	AV ADDRESS DATA BUS	
28	AV AD 1	I	AV ADDRESS DATA BUS	
29	AV RD	I	AV READ	
30				
31				
32	GND (D)		GND (DIGITAL CIRCUIT)	

P006 A' (L3)				
NO.	PIN NAME	I/O	DESCRIPTION	REMARKS
1	GND (D)		GND (DIGITAL CIRCUIT)	
2	PB DATA 6	I		
3	PB DATA 3	I		
4	PB DATA 0	I		
5	PB HST		PLAYBACK H START	
6	PB FN 0		PLAYBACK FIELD NO.0	
7	REF HST		REFERENCE H START	
8	REF FN 0		REFERENCE FIELD NO.0	
9	SYS 4FSC	O	SYSTEM 4FSC	
10	SYS 4FSC (NEG)	O	SYSTEM 4FSC (NEG)	
11	AU DATA IN 0	I	AUDIO REC DATA	
12	AU DATA IN 3	I	AUDIO REC DATA	
13	AU DATA IN 6	I	AUDIO REC DATA	
14				
15	PBD 12	O	PLAYBACK DATA CH1/CH2	
16	STO	O	STATUS DATA	
17				
18				
19				
20				
21				
22				
23	BYP 9	I	BYPASS 9	
24	BYP 6	I	BYPASS 6	
25	BYP 3	I	BYPASS 3	
26	BYP 0	I	BYPASS 0	
27	GND (D)		GND (DIGITAL CIRCUIT)	
28	+5V (D)		+5V (DIGITAL CIRCUIT)	
29	+5V (D)		+5V (DIGITAL CIRCUIT)	
30	-5V (D)		-5V (DIGITAL CIRCUIT)	
31	GND (D)		GND (DIGITAL CIRCUIT)	
32	GND (D)		GND (DIGITAL CIRCUIT)	

P005 B (L3)				
NO.	PIN NAME	I/O	FUNCTION	REMARKS
1	GND (A)		GND (ANALOG CIRCUIT)	
2	+12V (A)		+12V (ANALOG CIRCUIT)	
3	-12V (A)		-12V (ANALOG CIRCUIT)	
4	GND (A)		GND (ANALOG CIRCUIT)	
5	MCK	I	AUDIO MASTER CLOCK	
6	MCK (NEG)	I	AUDIO MASTER CLOCK (NEG)	
7				
8	MUTE 12	O	MUTE CH1/CH2	
9	SEG - 1	O	SEGMENT 1	
10	PB - FNO		PLAYBACK FIELD NO.	
11	SYNC + CH1			
12	SYNC - CH1			
13	PCON CLK		PITCH CONTROL CLOCK	
14	PCON CLK GND			
15	BYP2 2FSC	I	BYPASS 2 2FSC	
16	BYP2 2FSC (NEG)	I	BYPASS 2 2FSC (NEG)	
17				
18	PB DATA CH0 (NEG)	O		
19	PB CLOCK CH0 (NEG)	O		
20	PB DATA CH1 (NEG)	O		
21	PB CLOCK CH1 (NEG)	O		
22				
23				
24	AV AB 14	I	AV ADDRESS BUS	
25	AV AB 11	I	AV ADDRESS BUS	
26	AV AB 8	I	AV ADDRESS BUS	
27	AV AD 5	I	AV ADDRESS DATA BUS	
28	AV AD 2	I	AV ADDRESS DATA BUS	
29	AV ALE	I	AV ADDRESS LOAD ENABLE	
30	AV RESET	I	AV RESET	
31				
32	GND (D)		GND (DIGITAL CIRCUIT)	

P006 B' (L3)				
NO.	PIN NAME	I/O	DESCRIPTION	REMARKS
1	GND (D)		GND (DIGITAL CIRCUIT)	
2	PB DATA 7	I		
3	PB DATA 4	I		
4	PB DATA 1	I		
5	PB FLDST		PLAYBACK FIELD START	
6	ERR STRB		ERROR STROBE	
7	REF FLDST		REFERENCE FIELD START	
8	REF FN1		REFERENCE FIELD NO.1	
9	SYS 2FSC		SYSTEM 2FSC	
10	SYS 2FSC (NEG)		SYSTEM 2FSC (NEG)	
11	AU DATA IN 1	I	AUDIO REC DATA	
12	AU DATA IN 4	I	AUDIO REC DATA	
13	AU DATA IN 7	I	AUDIO REC DATA	
14				
15	PBD 34	O	PLAYBACK DATA CH3/CH4	
16	ST FLG	O	STATUS ERROR FLAG	
17				
18				
19				
20				
21				
22				
23	BYP 10		BYPASS 10	
24	BYP 7		BYPASS 7	
25	BYP 4		BYPASS 4	
26	BYP 1		BYPASS 1	
27	GND (D)		GND (DIGITAL CIRCUIT)	
28	+5V (D)		+5V (DIGITAL CIRCUIT)	
29	+5V (D)		+5V (DIGITAL CIRCUIT)	
30	-5V (D)		-5V (DIGITAL CIRCUIT)	
31	GND (D)		GND (DIGITAL CIRCUIT)	
32	GND (D)		GND (DIGITAL CIRCUIT)	

P005 C (L3)				
NO.	PIN NAME	I/O	FUNCTION	REMARKS
1	GND (A)		GND (ANALOG CIRCUIT)	
2	+12V (A)		+12V (ANALOG CIRCUIT)	
3	-12V (A)		-12V (ANALOG CIRCUIT)	
4	GND (A)		GND (ANALOG CIRCUIT)	
5	PB RST	I	PLAYBACK RESET	
6	PB FN	O	PLAYBACK FIELD NO.0	
7	PB 5F	O	PLAYBACK LEAP FIELD	
8	MUTE 34	O	MUTE CH3/CH4	
9				
10	REC FN 0	O	REC FIELD NO.0	
11				
12	PB TP FRAME		PLAYBACK TAPE FRAME	
13	PB H SW	I		
14				
15	BYP3 WCK	I	BYPASS 3 WRITE CLOCK	
16	BYP 3 WCK (NEG)	I	BYPASS 3 WRITE CLOCK (NEG)	
17				
18	PB DATA CH0 GND			
19	PB CLOCK CH0 GND			
20	PB DATA CH1 GND			
21	PB CLOCK CH1 GND			
22				
23	SEL REC SW	I	SELECT REC SWITCH	
24	AV AB 15	I	AV ADDRESS BUS	
25	AV AB 12	I	AV ADDRESS BUS	
26	AV AB 9	I	AV ADDRESS BUS	
27	AV AD 6	I	AV ADDRESS DATA BUS	
28	AV AD 3	I	AV ADDRESS DATA BUS	
29	AV AD 0	I	AV ADDRESS DATA BUS	
30	AV WR	I	AV WRITE	
31				
32	GND (D)		GND (DIGITAL CIRCUIT)	

P006 C' (L3)				
NO.	PIN NAME	I/O	DESCRIPTION	REMARKS
1	GND (D)		GND (DIGITAL CIRCUIT)	
2	PB FLAG	O	PLAYBACK FLAG	
3	PB DATA 5	I		
4	PB DATA 2	I		
5	PB CFST		PLAYBACK COLOR FRAME START	
6				
7				
8	REF FN2		REFERENCE FIELD NO.2	
9	REC FNO DL	O	REC FIELD NO.Ø DELAY	
10				
11	AU DATA IN 2	I	AUDIO REC DATA	
12	AU DATA IN 5	I	AUDIO REC DATA	
13	AU DATA GND		AUDIO REC DATA GND	
14				
15				
16	BLK SYNC	O	STATUS SYNC	
17				
18				
19				
20				
21				
22				
23	BYP 11	I	BYPASS 11	
24	BYP 8	I	BYPASS 8	
25	BYP 5	I	BYPASS 5	
26	BYP 2	I	BYPASS 2	
27	GND (D)		GND (DIGITAL CIRCUIT)	
28	+5V (D)		+5V (DIGITAL CIRCUIT)	
29	+5V (D)		+5V (DIGITAL CIRCUIT)	
30	-5V (D)		-5V (DIGITAL CIRCUIT)	
31	GND (D)		GND (DIGITAL CIRCUIT)	
32	GND (D)		GND (DIGITAL CIRCUIT)	

P007 A (L4)				
NO.	PIN NAME	I/O	FUNCTION	REMARKS
1	GND (A)		GND (ANALOG CIRCUIT)	
2	+12V (A)		+12V (ANALOG CIRCUIT)	
3	-12V (A)		-12V (ANALOG CIRCUIT)	
4	GND (A)		GND (ANALOG CIRCUIT)	
5	+8V (UN)		+8V (UNREGULATED)	
6	-8V (UN)		-8V (UNREGULATED)	
7	INCOM HR	I	INCOME H RESET	
8	INCOM FNO	I	INCOME FIELD NO.0	
9	BYP1 4FSC		BYPASS 1 4FSC	
10	BYP1 4FSC (NEG)		BYPASS 1 4FSC (NEG)	
11	REF HO	O	REFERENCE H OUT	
12	REF CS	O	REFERENCE COMPOSITE SYNC	
13	H RST		H RESET	
14	INCOM CS	I	INCOME COMPOSITE SYNC	
15	FV/2		FRAME PULSE	
16	90Hz/100Hz	I		
17	REF REC SW		REFERENCE REC SWITCH	
18	SPI HO			
19	PB COMP SYNC	O	PLAYBACK COMPOSITE SYNC	
20	REF VIDEO IN	I		
21	REF VIDEO IN GND			
22	BLACK BURST			
23	BLACK BURST GND			
24	AV AB 13	O	AV ADDRESS BUS	
25	AV AB 10	O	AV ADDRESS BUS	
26	AV AD 7	O	AV ADDRESS DATA BUS	
27	AV AD 4	O	AV ADDRESS DATA BUS	
28	AV AD 1	O	AV ADDRESS DATA BUS	
29	AV RD	O	AV READ	
30	AV SYS INT			
31	AV BUSY			
32	GND (D)		GND (DIGITAL CIRCUIT)	

P008 A' (L4)				
NO.	PIN NAME	I/O	DESCRIPTION	REMARKS
1	GND (D)		GND (DIGITAL CIRCUIT)	
2	PB DATA 6	I		
3	PB DATA 3	I		
4	PB DATA 0	I		
5	PB HST	I	PLAYBACK H START	
6	PB FN 0	I	PLAYBACK FIELD NO.0	
7	REF HST	I	REFERENCE H START	
8	REF FN 0	I	REFERENCE FIELD NO.0	
9	SYS 4FSC	O	SYSTEM 4FSC	
10	SYS 4FSC (NEG)	O	SYSTEM 4FSC (NEG)	
11	AV DATA 5	O	ANALOG VIDEO DATA 5	
12	AV DATA 2	O	ANALOG VIDEO DATA 2	
13	AV DATA -1	O	ANALOG VIDEO DATA 1	
14	AV CLK 0		ANALOG VIDEO CLOCK	
15	DV DATA OUT 5	O	DIGITAL VIDEO DATA OUT 5	
16	DV DATA OUT 5 (NEG)	O	DIGITAL VIDEO DATA OUT 5 (NEG)	
17	DV DATA OUT 2	O	DIGITAL VIDEO DATA OUT 2	
18	DV DATA OUT 2 (NEG)	O	DIGITAL VIDEO DATA OUT 2 (NEG)	
19	DV DATA OUT -1	O	DIGITAL VIDEO DATA OUT 1	
20	DV DATA OUT -1 (NEG)	O	DIGITAL VIDEO DATA OUT 1 (NEG)	
21				
22				
23	BYP 9	I	BYPASS 9	
24	BYP 6	I	BYPASS 6	
25	BYP 3	I	BYPASS 3	
26	BYP 0	I	BYPASS 0	
27	GND (D)		GND (DIGITAL CIRCUIT)	
28	+5V (D)		+5V (DIGITAL CIRCUIT)	
29	+5V (D)		+5V (DIGITAL CIRCUIT)	
30	-5V (D)		-5V (DIGITAL CIRCUIT)	
31	GND (D)		GND (DIGITAL CIRCUIT)	
32	GND (D)		GND (DIGITAL CIRCUIT)	

P007 B (L4)				
NO.	PIN NAME	I/O	FUNCTION	REMARKS
1	GND (A)		GND (ANALOG CIRCUIT)	
2				
3				
4				
5				
6				
7	INCOM REC SW		INCOME REC SWITCH	
8	INCOM FN 1	I	INCOME FIELD NO.1	
9	PCON CLK (4.5M)	I	PITCH CONTROL CLOCK	
10	PCON CLK GND			
11	REF FRM	O	REFERENCE FRAME	
12	REF VS	O	REFERENCE V SYNC	
13				
14	INCOM LALT		INCOME ALTERNATE	
15	FV/4		QUATER FIELD PULSE	
16	CAP FG1			
17				
18	SPI VD			
19	PB VITC			
20	EXT CF IN	I	EXTERNAL COLOR FRAMING IN	
21	EXT CF IN GND			
22	CF PULSE		COLOR FRAME PULSE	
23	CF PULSE GND			
24	AV AB 14	O	AV ADDRESS BUS	
25	AV AB 11	O	AV ADDRESS BUS	
26	AV AB 8	O	AV ADDRESS BUS	
27	AV AD 5	O	AV ADDRESS DATA BUS	
28	AV AD 2	O	AV ADDRESS DATA BUS	
29	AV ALE	O	AV ADDRESS LOAD ENABLE	
30	AV RESET	O	AV RESET	
31	VCP RESET			
32	GND (A)		GND (ANALOG CIRCUIT)	

P008 B' (L4)				
NO.	PIN NAME	I/O	DESCRIPTION	REMARKS
1	GND (D)		GND (DIGITAL CIRCUIT)	
2	PB DATA 7	I		
3	PB DATA 4	I		
4	PB DATA 1	I		
5	PB FLDST	I	PLAYBACK FIELD START	
6	ERR STRB	I	ERROR STROBE	
7	REF FLDST		REFERENCE FIELD START	
8	REF FN1	I	REFERENCE FIELD NO.1	
9	SYS 2FSC		SYSTEM 2FSC	
10	SYS 2FSC (NEG)		SYSTEM 2FSC (NEG)	
11	AV DATA 6	O	ANALOG VIDEO DATA 6	
12	AV DATA 3	O	ANALOG VIDEO DATA 3	
13	AV DATA 0	O	ANALOG VIDEO DATA 0	
14	AV CLK 0 (NEG)	O	ANALOG VIDEO CLOCK 0 (NEG)	
15	DV DATA OUT 6	O	DIGITAL VIDEO DATA OUT 6	
16	DV DATA OUT 6 (NEG)	O	DIGITAL VIDEO DATA OUT 6 (NEG)	
17	DV DATA OUT 3	O	DIGITAL VIDEO DATA OUT 3	
18	DV DATA OUT 3 (NEG)	O	DIGITAL VIDEO DATA OUT 3 (NEG)	
19	DV DATA OUT 0	O	DIGITAL VIDEO DATA OUT 0	
20	DV DATA OUT 0 (NEG)	O	DIGITAL VIDEO DATA OUT 0 (NEG)	
21	DV CLK 0		DIGITAL VIDEO CLK 0	
22	DV CLK 0 (NEG)		DIGITAL VIDEO CLK 0 (NEG)	
23	BYP 10	I	BYPASS 10	
24	BYP 7	I	BYPASS 7	
25	BYP 4	I	BYPASS 4	
26	BYP 1	I	BYPASS 1	
27	GND (D)		GND (DIGITAL CIRCUIT)	
28	+5V (D)		+5V (DIGITAL CIRCUIT)	
29	+5V (D)		+5V (DIGITAL CIRCUIT)	
30	-5V (D)		-5V (DIGITAL CIRCUIT)	
31	GND (D)		GND (DIGITAL CIRCUIT)	
32	GND (D)		GND (DIGITAL CIRCUIT)	

P007 C (L4)				
NO.	PIN NAME	I/O	FUNCTION	REMARKS
1	GND (D)		GND (DIGITAL CIRCUIT)	
2				
3				
4				
5				
6				
7				
8	INCOM FN2	I	INCOME FIELD NO.2	
9	CMPSY	O	COMPOSITE SYNC	
10	GND (A)		GND (ANALOG CIRCUIT)	
11	REF CF	O	REFERENCE COLOR FRAME	
12	REF CLK	O	REFERENCE CLOCK	
13	REF CLK (NEG)	O	REFERENCE CLOCK (NEG)	
14	INCOM SC	I	INCOME SUB CARRIER	
15	FV/8	O	PAL CF	
16	CAP DIR		CAPSTAN DIRECTION	
17				
18	PB V SYNC	O		
19				
20	TXD			
21	TXD L			
22	RXD			
23	RXD L			
24	AV AB 15	O	AV ADDRESS BUS	
25	AV AB 12	O	AV ADDRESS BUS	
26	AV AB 9	O	AV ADDRESS BUS	
27	AV AD 6	O	AV ADDRESS DATA BUS	
28	AV AD 3	O	AV ADDRESS DATA BUS	
29	AV AD 0	O	AV ADDRESS DATA BUS	
30	AV WR	O	AV WRITE	
31				
32	GND (D)		GND (DIGITAL CIRCUIT)	

P008 C' (L4)				
NO.	PIN NAME	I/O	DESCRIPTION	REMARKS
1	GND (D)		GND (DIGITAL CIRCUIT)	
2	PB FLAG			
3	PB DATA 5	I		
4	PB DATA 2	I		
5	PB CFST	I	PLAYBACK COLOR FRAME START	
6				
7				
8	REF FN 2	I	REFERENCE FIELD NO.2	
9	SYNC BLNK		SYNC BLANKING	
10	BURST FLAG			
11	AV DATA 7	O	ANALOG VIDEO DATA 7	
12	AV DATA 4	O	ANALOG VIDEO DATA 4	
13	AV DATA 1	O	ANALOG VIDEO DATA 1	
14	AV DATA -2	O	ANALOG VIDEO DATA 2	
15	DV DATA OUT 7	O	DIGITAL VIDEO DATA OUT 7	
16	DV DATA OUT 7 (NEG)	O	DIGITAL VIDEO DATA OUT 7 (NEG)	
17	DV DATA OUT 4	O	DIGITAL VIDEO DATA OUT 4	
18	DV DATA OUT 4 (NEG)	O	DIGITAL VIDEO DATA OUT 4 (NEG)	
19	DV DATA OUT 1	O	DIGITAL VIDEO DATA OUT 1	
20	DV DATA OUT 1 (NEG)	O	DIGITAL VIDEO DATA OUT 1 (NEG)	
21	DV DATA OUT -2	O	DIGITAL VIDEO DATA OUT 2	
22	DV DATA OUT -2 (NEG)	O	DIGITAL VIDEO DATA OUT 2 (NEG)	
23	BYP 11	I	BYPASS 11	
24	BYP 8	I	BYPASS 8	
25	BYP 5	I	BYPASS 5	
26	BYP 2	I	BYPASS 2	
27	GND (D)		GND (DIGITAL CIRCUIT)	
28	+5V (D)		+5V (DIGITAL CIRCUIT)	
29	+5V (D)		+5V (DIGITAL CIRCUIT)	
30	-5V (D)		-5V (DIGITAL CIRCUIT)	
31	GND (D)		GND (DIGITAL CIRCUIT)	
32	GND (D)		GND (DIGITAL CIRCUIT)	

P201 A (S1)				
NO.	PIN NAME	I/O	FUNCTION	REMARKS
1	GND (D)		GND (DIGITAL CIRCUIT)	
2				
3				
4	AT CH0 A GND			
5	AT CH0 A	I		
6	AT CH0 B GND			
7	AT CH0 B	I		
8	AT GND			
9				
10				
11				
12	REC DATA GND			
13	REC DATA CH0	I		
14	REC DATA GND			
15	REC DATA CH1	I		
16	REC CLK GND			
17	REC CLK	I		
18	REC CLK GND			
19	CH1 REC	I		
20	TEST EE2	I		
21				
22				
23				
24	REC ENV CH0	O	REC ENVELOPE CH0	
25	GND (A)		GND (ANALOG CIRCUIT)	
26				
27				
28	-5V (D)		-5V (DIGITAL CIRCUIT)	
29	+5V (D)		+5V (DIGITAL CIRCUIT)	
30	+5V (D)		+5V (DIGITAL CIRCUIT)	
31	GND (D)		GND (DIGITAL CIRCUIT)	
32	GND (D)		GND (DIGITAL CIRCUIT)	

P202 A' (S1)				
NO.	PIN NAME	I/O	DESCRIPTION	REMARKS
1	RF WFM GND			
2	AT ENV CH0	O	ENVELOPE CH0	
3				
4	EE CH0 DATA GND			
5	EE CH0 DATA	I		
6	EE CH1 DATA GND			
7	EE CH1 DATA	I		
8				
9				
10				
11				
12				
13				
14	ENV DET CH0	O	ENVELOPE DETECT CH0	
15	PB DATA CH0 GND			
16	PB DATA CH0	O		
17	PB CLOCK CH0 GND			
18	PB CLOCK CH0	O		
19				
20	GND (A)		GND (ANALOG CIRCUIT)	
21	PB MODE	I		
22	REC MODE	I		
23	EQ GAIN CH0	I	EQUALIZER GAIN CH0	
24	TEST MODE	I		
25	-5V (A)		-5V (ANALOG CIRCUIT)	
26	+5V (A)		+5V (ANALOG CIRCUIT)	
27	-12V (A)		-12V (ANALOG CIRCUIT)	
28	+12V (A)		+12V (ANALOG CIRCUIT)	
29	+15V (UN)		+15V (ANALOG CIRCUIT)	
30	+8V (UN)		+8V (ANALOG CIRCUIT)	
31	GND (A)		GND (ANALOG CIRCUIT)	
32	GND (A)		GND (ANALOG CIRCUIT)	

P201 B (S1)				
NO.	PIN NAME	I/O	FUNCTION	REMARKS
1	GND (D)		GND (DIGITAL CIRCUIT)	
2				
3				
4	GND (A)		GND (ANALOG CIRCUIT)	
5	GND (A)		GND (ANALOG CIRCUIT)	
6	GND (A)		GND (ANALOG CIRCUIT)	
7	GND (A)		GND (ANALOG CIRCUIT)	
8	GND (A)		GND (ANALOG CIRCUIT)	
9	GND (A)		GND (ANALOG CIRCUIT)	
10	GND (A)		GND (ANALOG CIRCUIT)	
11	GND (A)		GND (ANALOG CIRCUIT)	
12	GND (A)		GND (ANALOG CIRCUIT)	
13	GND (A)		GND (ANALOG CIRCUIT)	
14	GND (A)		GND (ANALOG CIRCUIT)	
15	GND (A)		GND (ANALOG CIRCUIT)	
16	GND (A)		GND (ANALOG CIRCUIT)	
17	GND (A)		GND (ANALOG CIRCUIT)	
18	GND (A)		GND (ANALOG CIRCUIT)	
19				
20				
21	H SW CH1	I	HEAD SWITCH CH1	
22	H SW CH0	I	HEAD SWITCH CH0	
23	SER H SW	I	SERIAL HEAD SWITCH	
24	GND (A)		GND (ANALOG CIRCUIT)	
25				
26				
27				
28	-5V (D)		-5V (DIGITAL CIRCUIT)	
29	+5V (D)		+5V (DIGITAL CIRCUIT)	
30	+5V (D)		+5V (DIGITAL CIRCUIT)	
31	GND (D)		GND (DIGITAL CIRCUIT)	
32	GND (D)		GND (DIGITAL CIRCUIT)	

P202 B' (S1)				
NO.	PIN NAME	I/O	DESCRIPTION	REMARKS
1	GND (A)		GND (ANALOG CIRCUIT)	
2				
3				
4				
5				
6				
7				
8				
9	GND (A)		GND (ANALOG CIRCUIT)	
10	GND (A)		GND (ANALOG CIRCUIT)	
11	GND (A)		GND (ANALOG CIRCUIT)	
12	GND (A)		GND (ANALOG CIRCUIT)	
13	GND (A)		GND (ANALOG CIRCUIT)	
14	GND (A)		GND (ANALOG CIRCUIT)	
15	GND (A)		GND (ANALOG CIRCUIT)	
16	GND (A)		GND (ANALOG CIRCUIT)	
17	GND (A)		GND (ANALOG CIRCUIT)	
18	GND (A)		GND (ANALOG CIRCUIT)	
19	GND (A)		GND (ANALOG CIRCUIT)	
20	GND (A)		GND (ANALOG CIRCUIT)	
21	REC CURR CH1	I	REC CURRENT CH1	
22	REC CURR CH0	I	REC CURRENT CH0	
23				
24				
25	-5V (A)		-5V (ANALOG CIRCUIT)	
26	+5V (A)		+5V (ANALOG CIRCUIT)	
27	-12V (A)		-12V (ANALOG CIRCUIT)	
28	+12V (A)		+12V (ANALOG CIRCUIT)	
29	+15V (UN)		+15V (ANALOG CIRCUIT)	
30	+8V (UN)		+8V (ANALOG CIRCUIT)	
31	GND (A)		GND (ANALOG CIRCUIT)	
32	GND (A)		GND (ANALOG CIRCUIT)	

P201 C (S1)				
NO.	PIN NAME	I/O	FUNCTION	REMARKS
1	GND (D)		GND (DIGITAL CIRCUIT)	
2				
3				
4				
5	AT CH0 A L	I		
6	AT CH0 A GND			
7	AT CH0 B L	I		
8	AT CH0 B GND			
9				
10				
11				
12	REC DATA GND			
13	REC DATA CH0 L	I		
14	REC DATA GND			
15	REC DATA CH1 L	I		
16	REC DATA GND			
17	REC CLK L	I		
18	REC CLK GND			
19	CH0 REC	I		
20	FLY ERASE	I	FLYING ERASE	
21				
22				
23				
24	REC ENV CH1	O	REC ENVELOPE CH1	
25	GND (A)	O	GND (ANALOG CIRCUIT)	
26				
27				
28	-5V (D)		-5V (DIGITAL CIRCUIT)	
29	+5V (D)		+5V (DIGITAL CIRCUIT)	
30	+5V (D)		+5V (DIGITAL CIRCUIT)	
31	GND (D)		GND (DIGITAL CIRCUIT)	
32	GND (D)		GND (DIGITAL CIRCUIT)	

P202 C' (S1)				
NO.	PIN NAME	I/O	DESCRIPTION	REMARKS
1	RF WFM	O		
2	ENV CH0 GND			
3				
4				
5	EE CH0 DATA L	I		
6	EE CH0 DATA GND			
7	EE CH1 DATA L	I		
8	EE CH1 DATA GND			
9				
10				
11				
12				
13				
14				
15				
16	PB DATA CH0 L	O		
17	PB DATA CH0 GND			
18	PB CLOCK CH0 L	O		
19	PB CLOCK CH0 GND			
20	HT SPEED	I	HEAD TAPE RELATIVE SPEED	
21	RF WFM SELECT 0	I		
22	RF WFM SELECT 1	I		
23	EQ FREQ CH0	I	EQUALIZER FREQUENCY CH0	
24				
25	-5V (A)		-5V (ANALOG CIRCUIT)	
26	+5V (A)		+5V (ANALOG CIRCUIT)	
27	-12V (A)		-12V (ANALOG CIRCUIT)	
28	+12V (A)		+12V (ANALOG CIRCUIT)	
29	+15V (UN)		+15V (ANALOG CIRCUIT)	
30	+8V (UN)		+8V (ANALOG CIRCUIT)	
31	GND (A)		GND (ANALOG CIRCUIT)	
32	GND (A)		GND (ANALOG CIRCUIT)	

P203 A (S2)				
NO.	PIN NAME	I/O	FUNCTION	REMARKS
1	GND (D)		GND (DIGITAL CIRCUIT)	
2				
3				
4	AT CH1 A GND			
5	AT CH1 A	I		
6	AT CH1 B GND			
7	AT CH1 B	I		
8	AT CH0 A GND			
9	AT CH0 A	I		
10	AT CH0 B GND			
11	AT CH0 B	I		
12				
13				
14				
15				
16				
17				
18				
19				
20	TEST EE2	I		
21				
22				
23				
24				
25				
26				
27				
28	-5V (D)		-5V (DIGITAL CIRCUT)	
29	+5V (D)		+5V (DIGITAL CIRCUIT)	
30	+5V (D)		+5V (DIGITAL CIRCUIT)	
31	GND (D)		GND (DIGITAL CIRCUIT)	
32	GND (D)		GND (DIGITAL CIRCUIT)	

P204 A' (S2)				
NO.	PIN NAME	I/O	DESCRIPTION	REMARKS
1	RF WFM GND			
2	AT ENV CH1	O	AT ENVELOPE CH1	
3	AT ENV CH0	O	AT ENVELOPE CH0	
4	EE CH1 DATA GND			
5	EE CH1 DATA	I		
6	EE CH0 DATA GND			
7	EE CH0 DATA	I		
8				
9	ENV DET CH0	O	ENVELOPE DETECTER CH0	
10	PB DATA CH0 GND			
11	PB DATA CH0	O		
12	PB CLOCK CH0 GND			
13	PB CLOCK CH0	O		
14	ENV DET CH1	O	ENVELOPE DETECTER CH1	
15	PB DATA CH1 GND			
16	PB DATA CH1	O		
17	PB CLOCK CH1 GND			
18	PB CLOCK CH1	O		
19				
20	GND (A)		GND (ANALOG CIRCUIT)	
21	PB MODE	I		
22				
23	EQ GAIN CH1	I	EQUALIZER GAIN CH1	
24	EQ GAIN CH0	I	EQUALIZER GAIN CH0	
25	-5V (A)		-5V (ANALOG CIRCUIT)	
26	+5V (A)		+5V (ANALOG CIRCUIT)	
27	-12V (A)		-12V (ANALOG CIRCUIT)	
28	+12V (A)		+12V (ANALOG CIRCUIT)	
29	+15V (UN)		+15V (ANALOG CIRCUIT)	
30	+8V (UN)		+8V (ANALOG CIRCUIT)	
31	GND (A)		GND (ANALOG CIRCUIT)	
32	GND (A)		GND (ANALOG CIRCUIT)	

P203 B (S2)				
NO.	PIN NAME	I/O	FUNCTION	REMARKS
1	GND (D)		GND (DIGITAL CIRCUIT)	
2				
3				
4	GND (A)		GND (ANALOG CIRCUIT)	
5	GND (A)		GND (ANALOG CIRCUIT)	
6	GND (A)		GND (ANALOG CIRCUIT)	
7	GND (A)		GND (ANALOG CIRCUIT)	
8	GND (A)		GND (ANALOG CIRCUIT)	
9	GND (A)		GND (ANALOG CIRCUIT)	
10	GND (A)		GND (ANALOG CIRCUIT)	
11	GND (A)		GND (ANALOG CIRCUIT)	
12	GND (A)		GND (ANALOG CIRCUIT)	
13	GND (A)		GND (ANALOG CIRCUIT)	
14	GND (A)		GND (ANALOG CIRCUIT)	
15	GND (A)		GND (ANALOG CIRCUIT)	
16	GND (A)		GND (ANALOG CIRCUIT)	
17	GND (A)		GND (ANALOG CIRCUIT)	
18	GND (A)		GND (ANALOG CIRCUIT)	
19				
20				
21				
22	H SW CH1	I	HEAD SWITCH CH1	
23	H SW CH0	I	HEAD SWITCH CH0	
24				
25				
26				
27				
28	-5V (D)		-5V (DIGITAL CIRCUIT)	
29	+5V (D)		+5V (DIGITAL CIRCUIT)	
30	+5V (D)		+5V (DIGITAL CIRCUIT)	
31	GND (D)		GND (DIGITAL CIRCUIT)	
32	GND (D)		GND (DIGITAL CIRCUIT)	

P204				
NO.	PIN NAME	I/O	DESCRIPTION	REMARKS
1	GND (A)		GND 9ANALOG CIRCUIT)	
2				
3				
4				
5				
6				
7				
8				
9	GND (A)		GND (ANALOG CIRCUIT)	
10	GND (A)		GND (ANALOG CIRCUIT)	
11	GND (A)		GND (ANALOG CIRCUIT)	
12	GND (A)		GND (ANALOG CIRCUIT)	
13	GND (A)		GND (ANALOG CIRCUIT)	
14	GND (A)		GND (ANALOG CIRCUIT)	
15	GND (A)		GND (ANALOG CIRCUIT)	
16	GND (A)		GND (ANALOG CIRCUIT)	
17	GND (A)		GND (ANALOG CIRCUIT)	
18	GND (A)		GND (ANALOG CIRCUIT)	
19	GND (A)		GND (ANALOG CIRCUIT)	
20				
21				
22				
23				
24				
25	-5V (A)		-5V (ANALOG CIRCUIT)	
26	+5V (A)		+5V (ANALOG CIRCUIT)	
27	-12V (A)		-12V (ANALOG CIRCUIT)	
28	+12V (A)		+12V (ANALOG CIRCUIT)	
29	+15V (UN)		+15V (ANALOG CIRCUIT)	
30	+8V (UN)		+8V (ANALOG CIRCUIT)	
31	GND (A)		GND (ANALOG CIRCUIT)	
32	GND (A)		GND (ANALOG CIRCUIT)	

P203 C (S2)				
NO.	PIN NAME	I/O	FUNCTION	REMARKS
1	GND (D)		GND (DIGITAL CIRCUIT)	
2				
3				
4				
5	AT CH1 A L	I		
6	AT CH1 A GND			
7	AT CH1 B L	I		
8	AT CH1 B GND			
9	AT CH0 A L	I		
10	AT CH0 A GND			
11	AT CH0 B L	I		
12	AT CH0 B GND			
13				
14				
15				
16				
17				
18				
19				
20				
21				
22				
23				
24				
25				
26				
27				
28	-5V (D)		-5V (DIGITAL CIRCUIT)	
29	+5V (D)		+5V (DIGITAL CIRCUIT)	
30	+5V (D)		+5V (DIGITAL CIRCUIT)	
31	GND (D)		GND (DIGITAL CIRCUIT)	
32	GND (D)		GND (DIGITAL CIRCUIT)	

P204 C' (S2)				
NO.	PIN NAME	I/O	DESCRIPTION	REMARKS
1	RF WFM	O		
2	ENV CH1 GND			
3	ENV CH0 GND			
4				
5	EE CH1 DATA L	I		
6	EE CH1 DATA GND			
7	EE CH0 DATA L	I		
8	EE CH0 DATA GND			
9				
10	PB DATA CH0 L	O		
11	PB DATA CH0 GND			
12	PB CLOCK CH0 L	O		
13	PB CLOCK CH0 GND			
14				
15				
16	PB DATA CH1 L	O		
17	PB DATA CH1 GND			
18	PB CLOCK CH1 L	O		
19	PB CLOCK CH1 GND			
20	HT SPEED	I	HEAD TAPE RELATIVE SPEED	
21	RF WFM SELECT 0	I		
22	RF WFM SELECT 1	I		
23	EQ FREQ CH1	I	EQUALIZER FREQUENCY CH1	
24	EQ FREQ CH0	I	EQUALIZER FREQUENCY CH0	
25	-5V (A)		-5V (ANALOG CIRCUIT)	
26	+5V (A)		+5V (ANALOG CIRCUIT)	
27	-12V (A)		-12V (ANALOG CIRCUIT)	
28	+12V (A)		+12V (ANALOG CIRCUIT)	
29	+15V (UN)		+15V (ANALOG CIRCUIT)	
30	+8V (UN)		+8V (ANALOG CIRCFUIT)	
31	GND (A)		GND (ANALOG CIRCUIT)	
32	GND (A)		GND (ANALOG CIRCUIT)	

P205 A (S3)				
NO.	PIN NAME	I/O	FUNCTION	REMARKS
1	NC.			
2				
3	GND (A)		GND (ANALOG CIRCUIT)	
4	GND (A)		TC R/P HEAD GND	
5	GND (A)		GND (ANALOG CIRCUIT)	
6	GND (A)		GND (ANALOG CIRCUIT)	
7				
8				
9				
10				
11				
12				
13				
14				
15				
16				
17				
18				
19	REC LTC	I	REC LTC DATA	
20				
21	FULERA L	I	FULL ERASE LOW	
22	CUEERA L	I	CUE ERASE LOW	
23	CUEREC L	I	CUE REC LOW	
24	MUTE L	I	MUTE LOW	
25	REC VR	I	CUE REC VR	
26	SIG MUT	O	SIGNAL MUTE	
27	+24V (UN)		+24V (UNREGULATED)	
28	-5V (D)		-5V (DIGITAL CIRCUIT)	
29	+5V (D)		+5V (DIGITAL CIRCUIT)	
30	+5V (D)		+5V (DIGITAL CIRCUIT)	
31	GND (D)		GND (DIGITAL CIRCUIT)	
32	GDN (D)		GND (DIGITAL CIRCUIT)	

P206 A' (S3)				
NO.	PIN NAME	I/O	DESCRIPTION	REMARKS
1				
2				
3				
4				
5				
6	GND (A)		GND (ANALOG CIRCUIT)	
7	GND (A)		GND (ANALOG CIRCUIT)	
8	GND (A)		GND (ANALOG CIRCUIT)	
9	GND (A)		GND (ANALOG CIRCUIT)	
10	GND (A)		GND (ANALOG CIRCUIT)	
11	GND (A)		GND (ANALOG CIRCUIT)	
12	GND (A)		GND (ANALOG CIRCUIT)	
13	GND (A)		CUE IN GND	
14	GND (A)		GND (ANALOG CIRCUIT)	
15	GND (A)		GND (ANALOG CIRCUIT)	
16	GND (A)		D MIX DATA GND	
17	GND (A)		GND (ANALOG CIRCUIT)	
18				
19				
20				
21				
22				
23				
24				
25	-5V (A)		-5V (ANALOG CIRCUIT)	
26	+5V (A)		+5V (ANALOG CIRCUIT)	
27	-12V (A)		-12V (ANALOG CIRCUIT)	
28	+12V (A)		+12V (ANALOG CIRCUIT)	
29	+15V (UN)		+15V (ANALOG CIRCUIT)	
30	+8V (UN)		+8V (ANALOG CIRCUIT)	
31	GND (A)		GND (ANALOG CIRCUIT)	
32	GND (A)		GND (ANALOG CIRCUIT)	

P205 B (S3)				
NO.	PIN NAME	I/O	FUNCTION	REMARKS
1	NC.			
2				
3	GND (A)		GND (ANALOG CIRCUIT)	
4	TC HEAD -	I/O	TC R/P HEAD C	
5	GND (A)		GND (ANALOG CIRCUIT)	
6	GND (A)		GND (ANALOG CIRCUIT)	
7				
8				
9				
10				
11				
12				
13				
14				
15				
16				
17				
18				
19	PB LTC	O	PLAYBACK LTC	
20				
21	OSC ON L	I	OSC ON LOW	
22	TCERA L	I	TC ERASE LOW	
23	TCREC L	I	TC REC LOW	
24	ATT 1	I	ATTENUATOR 1	
25	CUE PB VR	I	CUE PLAYBACK VR	
26				
27	+24V (UN)		+24V (UNREGULATED)	
28	-5V (D)		-5V (DIGITAL CIRCUIT)	
29	+5V (D)		+5V (DIGITAL CIRCUIT)	
30	+5V (D)		+5V (DIGITAL CIRCUIT)	
31	GND (D)		GND (DIGITAL CIRCUIT)	
32	GND (D)		GND (DIGITAL CIRCUIT)	

P206 B' (S3)				
NO.	PIN NAME	I/O	DESCRIPTION	REMARKS
1				
2				
3				
4				
5				
6	GND (A)		GND (ANALOG CIRCUIT)	
7	GND (A)		CUE METER GND	
8	GND (A)		GND (ANALOG CIRCUIT)	
9	GND (A)		GND (ANALOG CIRCUIT)	
10	GND (A)		CUE OUT GND	
11	GND (A)		GND (ANALOG CIRCUIT)	
12	GND (A)		GND (ANALOG CIRCUIT)	
13	CUE IN C	I	CUE IN COLD	
14	GND (A)		GND (ANALOG CIRCUIT)	
15	GND (A)		GND (ANALOG CIRCUIT)	
16	CUE D C	I	D MIX DATA COLD	
17	GND (A)		GND (ANALOG CIRCUIT)	
18				
19				
20				
21				
22				
23				
24				
25	-5V (A)		-5V (ANALOG CIRCUIT)	
26	+5V (A)		+5V (ANALOG CIRCUIT)	
27	-12V (A)		-12V (ANALOG CIRCUIT)	
28	+12V (A)		+12V (ANALOG CIRCUIT)	
29	+15V (UN)		+15V (ANALOG CIRCUIT)	
30	+8V (UN)		+8V (ANALOG CIRCUIT)	
31	GND (A)		GND (ANALOG CIRCUIT)	
32	GND (A)		GND (ANALOG CIRCUIT)	

P205 C (S3)				
NO.	PIN NAME	I/O	FUNCTION	REMARKS
1	NC.			
2				
3	GND (A)		GND (ANALOG CIRCUIT)	
4	TC HEAD +	I/O	TC R/P HEAD H	
5	GND (A)		GND (ANALOG CIRCUIT)	
6	GND (A)		GND (ANALOG CIRCUIT)	
7				
8				
9	RESET	I	SYSTEM RESET	
10				
11				
12				
13				
14				
15				
16				
17				
18				
19	GND (A)		GND (ANALOG CIRCUIT)	
20	X3FOR	I		
21	ERA CHK	O	ERASE CHECK	
22	CTLERA L	I	CTL ERASE LOW	
23	CUE EE	I	CUE EE	
24	ATT 2	I	ATTENUATOR 2	
25	CUE MIX	I	D MIX SELECT	
26				
27	+24V (UN)		+24V (UNREGULATED)	
28	-5V (D)		-5V (DIGITAL CIRCUIT)	
29	+5V (D)		+5V (DIGITAL CIRCUIT)	
30	+5V (D)		+5V (DIGITAL CIRCUIT)	
31	GND (D)		GND (DIGITAL CIRCUIT)	
32	GND (D)		GND (DIGITAL CIRCUIT)	

P206 C' (S3)				
NO.	PIN NAME	I/O	DESCRIPTION	REMARKS
1				
2				
3				
4				
5				
6	GND (A)		GND (ANALOG CIRCUIT)	
7	CUE METER	O	CUE METER	
8	GND (A)		GND (ANALOG CIRCUIT)	
9	GND (A)		GND (ANALOG CIRCUIT)	
10	CUE OUT	O	CUE OUT	
11	GND (A)		GND (ANALOG CIRCUIT)	
12	GND (A)		GND (ANALOG CIRCUIT)	
13	CUE IN H	I	CUE IN HOT	
14	GND (A)		GND (ANALOG CITCUIT)	
15	GND (A)		GND (ANALOG CIRCUIT)	
16	CUE D H	I	D MIX DATA HOT	
17	GND (A)		GND (ANALOG CIRCUIT)	
18				
19				
20				
21				
22				
23				
24				
25	-5V (A)		-5V (ANALOG CIRCUIT)	
26	+5V (A)		+5V (ANALOG CIRCUIT)	
27	-12V (A)		-12V (ANALOG CIRCUIT)	
28	+12V (A)		+12V (ANALOG CIRCUIT)	
29	+15V (UN)		+15V (UNREGULATED)	
30	+8V (UN)		+8V (UNREGULATED)	
31	GND (A)		GND (ANALOG CIRCUIT)	
32	GND (A)		GND (ANALOG CIRCUIT)	

P207 A (S4)				
NO.	PIN NAME	I/O	FUNCTION	REMARKS
1	GND (D)		GND (DIGITAL CIRCUIT)	
2				
3				
4				
5				
6				
7				
8				
9	SEG-0	I	SEGMENT-0	
10	PB FN0	I	PLAYBACK FIELD NO.0	
11				
12				
13				
14				
15				
16				
17				
18				
19	STRN B	I	STRAIN B	
20	PAT A G	O	PATTERN A HEAD	
21	PAT B G	O	PATTERN B HEAD	
22				
23				
24				
25				
26				
27				
28	-5V (D)		-5V (DIGITAL CIRCUIT)	
29	+5V (D)		+5V (DIGITAL CIRCUIT)	
30	+5V (D)		+5V (DIGITAL CIRCUIT)	
31	GND (D)		GND (DIGITAL CIRCUIT)	
32	GND (D)		GND (DIGITAL CIRCUIT)	

P208 A' (S4)				
NO.	PIN NAME	I/O	DESCRIPTION	REMARKS
1				
2	ENV CH0	I	ENVELOPE CH0	
3	ENV CH0 GND	I	ENVELOPE CHO GND	
4	ENV CH1	I	ENVELOPE CH1	
5	ENV CH1 GND	I	ENVELOPE CH1 GND	
6				
7				
8				
9				
10	AT 0T DT	O	AT OUT DATA	
11	ADV H SW	I	ADVANCE HEAD SWITCH	
12	ADV H SW GND	I	ADVANCE HEAD SWITCH GND	
13	CAP FB	O	CAPSTAN FEEDBACK	
14	CAP FB G	O	CAPSTAN FEEDBACK GND	
15				
16	CAP F/R	O	CAPSTAN FORWARD/REVERSE	
17				
18				
19				
20				
21				
22				
23				
24				
25	-5V (A)		-5V (ANALOG CIRCUIT)	
26	+5V (A)		+5V (ANALOG CIRCUIT)	
27	-12V (A)		-12V (ANALOG CIRCUIT)	
28	+12V (A)		+12V (ANALOG CIRCUIT)	
29	+15V (UN)		+15V (UNREGULATED)	
30	+8V (UN)		+8V (UNREGULATED)	
31	GND (A)		GND (ANALOG CIRCUIT)	
32	GND (A)		GND (ANALOG CIRCUIT)	

P207 B (S4)				
NO.	PIN NAME	I/O	FUNCTION	REMARKS
1	GND (D)		GND (DIGITAL CIRCUIT)	
2				
3				
4				
5				
6				
7				
8				
9	SEG 1	I	SEGMENT 1	
10	SEG VAG	I	SEGMENT VAGUE	
11				
12				
13				
14				
15	FR GATE	O	FRAME GATE	
16	FV/2	I	FRAME REFERENCE	
17				
18				
19	STRN G	I	STRAIN GND	
20	PAT A	O	PATTERN A	
21	PAT B	O	PATTERN B	
22				
23				
24				
25				
26				
27				
28	-5V (D)		-5V (DIGITAL CIRCUIT)	
29	+5V (D)		+5V (DIGITAL CIRCUIT)	
30	+5V (D)		+5V (DIGITAL CIRCUIT)	
31	GND (D)		GND (DIGITAL CIRCUIT)	
32	GND (D)		GND (DIGITAL CIRCUIT)	

P208 B' (S4)				
NO.	PIN NAME	I/O	DESCRIPTION	REMARKS
1				
2				
3				
4				
5				
6				
7	AC CTL	I	CTL PULSE	
8				
9				
10	AT IN DT	I	AT IN DATA	
11				
12				
13				
14				
15				
16				
17				
18				
19				
20				
21				
22				
23				
24				
25	-5V (A)		-5V (ANALOG CIRCUIT)	
26	+5V (A)		+5V (ANALOG CIRCUIT)	
27	-12V (A)		-12V (ANALOG CIRCUIT)	
28	+12V (A)		+12V (ANALOG CIRCUIT)	
29	+15V (UN)		+15V (UNREGULATED)	
30	+8V (UN)		+8V (UNREGULATED)	
31	GND (A)		GND (ANALOG CIRCUIT)	
32	GND (A)		GND (ANALOG CIRCUIT)	

P207 C (S4)				
NO.	PIN NAME	I/O	FUNCTION	REMARKS
1	GND (D)		GND (DIGITAL CIRCUIT)	
2				
3				
4				
5				
6				
7				
8				
9	SYNC+CH0	I	OFF TAPE SYNC+CH0	
10	SYNC-CH0	I	OFF TAPE SYNC-CH0	
11				
12	SYNC+CH1	I	OFF TAPE SYNC+CH1	
13	SYNC-CH1	I	OFF TAPE SYNC-CH1	
14				
15				
16				
17				
18				
19	STRN A	I	STRAIN A	
20	HV MONI	I	HIGH VOLTAGE MONITOR	
21	HV ON	O	HIGH VOLTAGE ON	
22				
23				
24				
25				
26				
27				
28	-5V (D)		-5V (DIGITAL CIRCUIT)	
29	+5V (D)		+5V (DIGITAL CIRCUIT)	
30	+5V (D)		+5V (DIGITAL CIRCUIT)	
31	GND (D)		GND (DIGITAL CIRCUIT)	
32	GND (D)		GND (DIGITAL CIRCUIT)	

P208 C' (S4)				
NO.	PIN NAME	I/O	DESCRIPTION	REMARKS
1				
2				
3				
4				
5				
6	SER ADR0	I	SERIAL ADDRESS 0	
7	SER ADR1	I	SERIAL ADDRESS 1	
8	SER ADR2	I	SERIAL ADDRESS 2	
9				
10	AT CLK	I	AT CLOCK	
11				
12				
13	CNF H	O	CONFIDENCE HIGH	
14	CAP FG 1	I	CAPSTAN FG 1	
15				
16	CAP FG 2	I	CAPSTAN FG 2	
17				
18	REC ENV CH0	I	REC ENVELOPE CH0	
19	REC ENV CH0 GND	I	REC ENVELOPE CH0 GND	
20	R ENV1	I	REC ENVELOPE CH1	
21	REC ENV CH1 GND	I	REC ENVELOPE CH1 GND	
22	MRST	I	MASTER RESET	
23				
24				
25	-5V (A)		-5V (ANALOG CIRCUIT)	
26	+5V (A)		+5V (ANALOG CIRCUIT)	
27	-12V (A)		-12V (ANALOG CIRCUIT)	
28	+12V (A)		+12V (ANALOG CIRCUIT)	
29	+15V (UN)		+15V (UNREGULATED)	
30	+8V (UN)		+8V (UNREGULATED)	
31	GND (A)		GND (ANALOG CIRCUIT)	
32	GND (A)		GND (ANALOG CIRCUIT)	

P209 A (S5)				
NO.	PIN NAME	I/O	FUNCTION	REMARKS
1	GND (D)		GND (DIGITAL CIRCUIT)	
2	DRUM FG	I	DRUM FG	
3	PG -	I	DRUM PG -	
4	FG 1	I	CAPSTAN FG 1	
5	TPH 1	I	TAKE UP FG 1	
6	SPH 2	I	SUPPLY FG 2	
7	TEN GND	O	TENSION SENSOR GND	
8	TEN VCC	O	TENSION SENSOR VCC	
9	CTL HE +	I	CONTROL HEAD +	
10	D STOP L	O	DRUM STOP LOW	
11				
12	CAP EDS	O	CAPSTAN FWD/REV/STOP	
13				
14	TERR	O	T-REEL DRIVE ERR	
15				
16	90/100Hz	I	HEAD SWITCH REFERENCE	
17	FV/8	I	CF REFERENCE (PAL)	
18				
19	FVVCC	O	REEL FG SENSOR VCC	
20				
21	DRUM RST	I	DRUM RESET	
22				
23				
24				
25				
26				
27				
28	-5V (D)		-5V (DIGITAL CIRCUIT)	
29	+5V (D)		+5V (DIGITAL CIRCUIT)	
30	+5V (D)		+5V (DIGITAL CIRCUIT)	
31	GND (D)		GND (DIGITAL CIRCUIT)	
32	GND (D)		GND (DIGITAL CIRCUIT)	

P210 A' (S5)				
NO.	PIN NAME	I/O	DESCRIPTION	REMARKS
1				
2				
3				
4				
5	A/C CTL	O	CTL PULSE	
6	SER ADAT	I	SERIAL DATA (TO SERVO)	
7	SER BDAT	O	SERIAL DATA (TO SYSCON)	
8	SER CLK	I	SERIAL CLOCK	
9	S FG	O	SUPPLY FG	
10	AT OT DT	I	SERIAL OUTPUT DATA FROM AT	
11	ADV H.SW	O	ADVANCE HEAD SWITCH	
12	ADV H SW GND	O	ADVANCE HEAD SWITCH GND	
13	CAP FB	I	CAPSTAN FEEDBACK (FROM AT)	
14	CAP FB G	I	CAPSTAN FEEDBACK GND	
15				
16	CAP F/R	I	CAPSTAN FOWARD/REVERSE FROM AT	
17				
18	SER H.SW	O	SERIAL HEAD SWITCH	
19	HT SPEED GND	O	HEAD-TAPE RERATIVE SPEED GND	
20				
21				
22	R ENV1	I	REC ENVELOPE CH1	
23	AG (R ENV1 G)	I	REC ENVELOPE CH1 GND	
24				
25	-5V (A)		-5V (ANALOG CIRCUIT)	
26	+5V (A)		+5V (ANALOG CIRCUIT)	
27	-12V (A)		-12V (ANALOG CIRCUIT)	
28	+12V (A)		+12V (ANALOG CIRCUIT)	
29	+15V (UN)		+15V (UNREGULATED)	
30	+8V (UN)		+8V (UNREGULATED)	
31	GND (A)		GND (ANALOG CIRCUIT)	
32	GND (A)		GND (ANALOG CIRCUIT)	

P209 B (S5)				
NO.	PIN NAME	I/O	FUNCTION	REMARKS
1	GND (D)		GND (DIGITAL CIRCUIT)	
2	AG	I	DRUM FG GND	
3	V FG +	O	CAPSTAN FG SENSOR VCC	
4	FG 2	I	CAPSTAN FG 2	
5	TPH 2	I	TAKE UP FG 2	
6				
7	AG (CTL S)	I	ANALOG GND (CTL SHIELD)	
8	S TENTION	I	SUPPLY TENSION	
9	CTL HE -	I	CONTROL HEAD -	
10	D ERR	O	DRUM ERROR	
11	DRUM REF GND	O	DRUM REFERENCE GND	
12	CAP ERR	O	CAPSTAN ERROR	
13	CAP REF GND	O	CAPSTAN REFERENCE GND	
14	SERR	O	S-REEL DRIVE ERROR	
15	FR GATE	I	FRAME GATE	
16	FV/2	I	FRAME REFERENCE	
17	PB FRAME	O	PLAYBACK TAPE FRAME	
18				
19	FG GND (SFG GND)	O	REEL FG SENSOR GND	
20				
21	CAP RST	I	CAPSTAN RESET	
22				
23				
24				
25				
26				
27				
28	-5V (D)		-5V (DIGITAL CIRCUIT)	
29	+5V (D)		+5V (DIGITAL CIRCUIT)	
30	+5V (D)		+5V (DIGITAL CIRCUIT)	
31	GND (D)		GND (DIGITAL CIRCUIT)	
32	GND (D)		GND (DIGITAL CIRCUIT)	

P210 B' (S5)				
NO.	PIN NAME	I/O	DESCRIPTION	REMARKS
1				
2				
3				
4	SYS FRM	O	CTL FRAME	
5		O	CTL CF	
6	SER AD 0	I	SERIAL ADDRESS 0	
7	SER AD 1	I	SERIAL ADDRESS 1	
8	SER AD 2	I	SERIAL ADDRESS 2	
9	T-FG	O	TAKE UP FG	
10	AT IN DT	O	SERIAL INPUT DATA TO AT	
11	REC H.SW	O	REC HEAD SWITCH	
12	REC H SW GND	O	REC HEAD SWITCH GND	
13				
14	WFM CTL	O	WAVEFORM CTL	
15	AG (GND A)	O	WAVEFORM CTL GND	
16				
17				
18	SER HSW GND	O	SERIAL HSW GND	
19	REC ENV CH0	I	REC ENVELOPE CH0	
20				
21				
22				
23				
24				
25	-5V (A)		-5V (ANALOG CIRCUIT)	
26	+5V (A)		+5V (ANALOG CIRCUIT)	
27	-12V (A)		-12V (ANALOG CIRCUIT)	
28	+12V (A)		+12V (ANALOG CIRCUIT)	
29	+15V (UN)		+15V (UNREGULATED)	
30	+8V (UN)		+8V (UNREGULATED)	
31	GND (A)		GND (ANALOG CIRCUIT)	
32	GND (A)		GND (ANALOG CIRCUIT)	

P209 C (S5)				
NO.	PIN NAME	I/O	FUNCTION	REMARKS
1	GND (D)		GND (DIGITAL CIRCUIT)	
2	PG +	I	DRUM PG +	
3	V FG G	O	CAPSTAN FG SENSOR GND	
4				
5	SPH 1	I	SUPPLY FG 1	
6				
7				
8	PNCH-ON	I	PINCH ON	
9	D BRK L	O	DRUM BRAKE LOW	
10	DRUM ERR GND	O	DRUM ERROR GND	
11	D SW L	O	DRUM SWITCH LOW	
12	CAP ERR GND	O	CAPSTAN ERROR GND	
13	CAP RCC	O	CAPSTAN RIPPLE CANCEL	
14	+2.5VA	O	SERVO REF +2.5[V]	
15				
16	FV/4	I	CF REFERENCE (NTSC)	
17	PB H.SW	O	PLAYBACK HEAD SWITCH	
18				
19	FG GND (TFG GND)	O	REEL FG SENSOR GND	
20				
21	REEL RST	I	REEL RESET	
22				
23				
24				
25				
26				
27				
28	-5V (D)		-5V (DIGITAL CIRCUIT)	
29	+5V (D)		+5V (DIGITAL CIRCUIT)	
30	+5V (D)		+5V (DIGITAL CIRCUIT)	
31	GND (D)		GND (DIGITAL CIRCUIT)	
32	GND (D)		GND (DIGITAL CIRCUIT)	

P210 C' (S5)				
NO.	PIN NAME	I/O	DESCRIPTION	REMARKS
1				
2				
3				
4	3FRM	I	FRAME REFERENCE AT X3 FORMAT	
5	3CF	I	CF REFERENCE AT X3 FORMAT	
6	SER SEL 0	I	SERIAL SELECT 0	
7	SER SEL 1	I	SERIAL SELECT 1	
8	CAP DIR	O	CAPSTAN DIRECTION	
9	CAP FGP	O	CAPSTAN FG PULSE	
10	AT CLK	O	SERIAL CLOCK (TO AT)	
11	CNF H.SW	O	CONFIDENCE HEAD SWITCH	
12	CNF H SW GND	O	CONFIDENCE HEAD SWITCH GND	
13	CNF H	I	CONFIDENCE HIGH	
14	CAP FG1	O	CAPSTAN FG 1	
15				
16	CAP FG2	O	CAPSTAN FG 2	
17				
18	HT SPD	O	HEAD TAPE RELATIVE SPEED	
19	REC ENV CH0 GND	I	REC ENVELOPE CH0 GND	
20				
21				
22				
23				
24				
25	-5V (A)		-5V (ANALOG CIRCUIT)	
26	+5V (A)		+5V (ANALOG CIRCUIT)	
27	-12V (A)		-12V (ANALOG CIRCUIT)	
28	+12V (A)		+12V (ANALOG CIRCUIT)	
29	+15V (UN)		+15V (UNREGULATED)	
30	+8V (UN)		+8V (UNREGULATED)	
31	GND (A)		GND (ANALOG CIRCUIT)	
32	GND (A)		GND (ANALOG CIRCUIT)	

P211 A (S6)				
NO.	PIN NAME	I/O	FUNCTION	REMARKS
1	GND (D)		GND (DIGITAL CIRCUIT)	
2				
3				
4				
5				
6				
7				
8				
9	SYS DB 0	I/O	SYSCON DATA BUS 0	
10	SYS DB 1	I/O	SYSCON DATA BUS 1	
11	SYS DB 2	I/O	SYSCON DATA BUS 2	
12	SYS DB 3	I/O	SYSCON DATA BUS 3	
13	SYS DB 4	I/O	SYSCON DATA BUS 4	
14	SYS DB 5	I/O	SYSCON DATA BUS 5	
15	SYS DB 6	I/O	SYSCON DATA BUS 6	
16	SYS DB 7	I/O	SYSCON DATA BUS 7	
17	TC INT	O	TC INTERUPT	
18				
19				
20				
21	FULL ERASE	O		
22	CUE ERASE	O		
23	CUE REC	O		
24	MUTE	O		
25	CUE REC VR	O		
26	REC LTC	O		
27				
28	-5V (D)		-5V (DIGITAL CIRCUIT)	
29	+5V (D)		+5V (DIGITAL CIRCUIT)	
30	+5V (D)		+5V (DIGITAL CIRCUIT)	
31	GND (D)		GND (DIGITAL CIRCUIT)	
32	GND (D)		GND (DIGITAL CIRCUIT)	

P212 A' (S6)				
NO.	PIN NAME	I/O	DESCRIPTION	REMARKS
1				
2	T/C IN +	I		
3	T/C OUT +	O		
4				
5	AC-CTL	I		
6	TRANSMIT A 1	I/O		
7	TRANSMIT B 1	I/O		
8	RECEIVE A 1	I/O		
9	RECEIVE B 1	I/O		
10	TXD	O	RS232C TXD	
11	CTS	I	RS232C CTS	
12	CHAR SIG	O	CHARACTER SIFNAL	
13	SPI HD	I	SUPER INPOSE HP	
14	PB VITC	I		
15	REC CF	I	REC COLOR PRAME	
16	4FSC CLK	I		
17	DIO 1	I/O	GPIB DATA	
18	DIO 4	I/O	GPIB DATA	
19	DIO 7	I/O	GPIB DATA	
20	DAV	I/O	GPIB STATUS	
21	ATN	I/O	GPIB STATUS	
22	REM	I/O	GPIB STATUS	
23				
24				
25	-5V (A)		-5V (ANALOG CIRCUIT)	
26	+5V (A)		+5V (ANALOG CIRCUIT)	
27	-12V (A)		-12V (ANALOG CIRCUIT)	
28	+12V (A)		+12V (ANALOG CIRCUIT)	
29	+15V (UN)		+15V (UNREGULATED)	
30	+8V (UN)		+8V (UNREGULATED)	
31	GND (A)		GND (ANALOG CIRCUIT)	
32	GND (A)		GND (ANALOG CIRCUIT)	

P211 B (S6)				
NO.	PIN NAME	I/O	FUNCTION	REMARKS
1	GND (D)		GND (DIGITAL CIRCUIT)	
2				
3				
4				
5				
6				
7				
8				
9	SYS AB 0	I	SYSCON ADDRESS BUS 0	
10	SYS AB 1	I	SYSCON ADDRESS BUS 1	
11	SYS AB 2	I	SYSCON ADDRESS BUS 2	
12	SYS AB 3	I	SYSCON ADDRESS BUS 3	
13	SYS AB 4	I	SYSCON ADDRESS BUS 4	
14	SYS AB 5	I	SYSCON ADDRESS BUS 5	
15	SYS AB 6	I	SYSCON ADDRESS BUS 6	
16	SYS AB 7	I	SYSCON ADDRESS BUS 7	
17	SYS AB 8	I	SYSCON ADDRESS BUS 8	
18	SYS AB 9	I	SYSCON ADDRESS BUS 9	
19	SYS AB 10	I	SYSCON ADDRESS BUS 10	
20				
21	7 OSC ON	O		
22	TC ERASE	O		
23	TC REC	O		
24	ATT 1	O	ATTENUTOR 1	
25	CUE PB VR	O		
26	PB LTC	I		
27				
28	-5V (D)		-5V (DIGITAL CIRCUIT)	
29	+5V (D)		+5V (DIGITAL CIRCUIT)	
30	+5V (D)		+5V (DIGITAL CIRCUIT)	
31	GND (D)		GND (DIGITAL CIRCUIT)	
32	GND (D)		GND (DIGITAL CIRCUIT)	

P212 B' (S6)				
NO.	PIN NAME	I/O	DESCRIPTION	REMARKS
1				
2	T/C IN -	I		
3	T/C OUT -	O		
4				
5	SYS FRM	I	SYSTEM FRAME	
6	TRANSMIT A 2	I/O		
7	TRANSMIT B 2	I/O		
8	RECEIVE A 2	I/O		
9	RECEIVE B 2	I/O		
10	RXD	I	RS232C RXD	
11	DSR	I	RS232 DSR	
12	CHAR GATE	O	CHARACTER GATE	
13	SPI VD	I	SUPER INPOSE VD	
14	PB COMP SYNC	I		
15	REC VITC	I		
16	REC COMP SYNC	I		
17	DIO 2	I/O	GPIB DATA	
18	DIO 5	I/O	GPIB DATA	
19	DIO 8	I/O	GPIB DATA	
20	NRFD	I/O	GPIB STATUS	
21	IFC	I/O	GPIB STATUS	
22	EDI	I/O	GPIB STATUS	
23				
24				
25	-5V (A)		-5V (ANALOG CIRCUIT)	
26	+5V (A)		+5V (ANALOG CIRCUIT)	
27	-12V (A)		-12V (ANALOG CIRCUIT)	
28	+12V (A)		+12V (ANALOG CIRCUIT)	
29	+15V (UN)		+15V (UNREGULATED)	
30	+8V (UN)		+8V (UNREGULATED)	
31	GND (A)		GND (ANALOG CIRCUIT)	
32	GND (A)		GND (ANALOG CIRCUIT)	

P211 C (S6)				
NO.	PIN NAME	I/O	FUNCTION	REMARKS
1	GND (D)		GND (DIGITAL CIRCUIT)	
2				
3				
4				
5				
6				
7				
8				
9	SYS RESET	I	SYSCON RESET	
10	SYS IORD	I	SYSCON I/O READ	
11	SYS IOWR	I	SYSCON I/O WRITE	
12	SYS MERD	I	SYSCON MEMORY READ	
13	SYS MEWR	I	SYSCON MEMORY WRITE	
14	SYS BUSY	O	SYSCON BUSY	
15	SYS CS TC	I	SYSCON CHIP SELECT TC	
16	SYS CS REMT	I	SYSCON CHIP SELECT REMOTE	
17	REMT INT	O	REMOTE INTERRUPT	
18				
19				
20				
21	ERASE CHECK	I		
22	CTL ERASE	O		
23	CUE EE	O		
24	ATT 2	O	ATTENUTOR 2	
25	CUE MIX	O		
26				
27				
28	-5V (D)			
29	+5V (D)			
30	+5V (D)			
31	GND (D)			
32	GND (D)			

C' (S6)				
NO.	PIN NAME	I/O	DESCRIPTION	REMARKS
1				
2	T/C IN GND			
3	T/C OUT GND			
4	X3FRM	O	X3 FORMAT FRAME PULSE	
5	X3CF	O	X3 FORMAT CF PULSE	
6	TRANSMIT A 3	I/O		
7	TRANSMIT B 3	I/O		
8	RECEIVE A 3	I/O		
9	RECEIVE B 3	I/O		
10	RTS	O	REQUEST TO SEND	
11	DTR	O	DATA TERMINAL READY	
12	DCD	I	DATA CARRIER DETECTED	
13				
14	PB V SYNC	I		
15	VITC GATE	I		
16	REC V SYNC	I		
17	DID 3	I/O	GPIB DATA	
18	DID 6	I/O	GPIB DATA	
19		I/O		
20	NDAC	I/O	GPIB STATUS	
21	SRQ	I/O	GPIB STATUS	
22				
23				
24				
25	-5V (A)		-5V (ANALOG CIRCUIT)	
26	+5V (A)		+5V (ANALOG CIRCUIT)	
27	-12V (A)		-12V (ANALOG CIRCUIT)	
28	+12V (A)		+12V (ANALOG CIRCUIT)	
29	+15V (UN)		+15V (UNREGULATED)	
30	+8V (UN)		+8V (UNREGULATED)	
31	GND (A)		GND (ANALOG CIRCUIT)	
32	GND (A)		GND (ANALOG CIRCUIT)	

P213 A (S7)				
NO.	PIN NAME	I/O	FUNCTION	REMARKS
1	GND (D)		GND (DIGITAL CIRCUIT)	
2	AV AD 0	I/O	AV ADDRESS DATA BUS 0	
3	AV AD 3	I/O	AV ADDRESS DATA BUS 3	
4	AV AD 6	I/O	AV ADDRESS DATA BUS 6	
5	AV AD 8	I/O	AV ADDRESS DATA BUS 8	
6	AV AB 11	I	AV ADDRESS BUS 11	
7	AV AB 14	I	AV ADDRESS BUS 14	
8	AV RD	I	AV READ	
9	SYS DB 0	I/O	SYSCON DATA BUS 0	
10	SYS DB 1	I/O	SYSCON DATA BUS 1	
11	SYS DB 2	I/O	SYSCON DATA BUS 2	
12	SYS DB 3	I/O	SYSCON DATA BUS 3	
13	SYS DB 4	I/O	SYSCON DATA BUS 4	
14	SYS DB 5	I/O	SYSCON DATA BUS 5	
15	SYS DB 6	I/O	SYSCON DATA BUS 6	
16	SYS DB 7	I/O	SYSCON DATA BUS 7	
17	TC INT	I		
18	REC V SYNC	I		
19	REC CF	I		
20	AT RST	O	AT RESET	
21	DRUM RST	O	DRUM RESET	
22	MCONT 5	O	MECH CONTROL 5	
23	PINCH ON	O		
24	MCONT 1	O	MECH CONTROL 1	
25	MCONT 2	O	MECH CONTROL 2	
26	T REEL DRV ON	O	T REEL DRIVE ON	
27				
28	-5V (D)		-5V (DIGITAL CIRCUIT)	
29	+5V (D)		+5V (DIGITAL CIRCUIT)	
30	+5V (D)		+5V (DIGITAL CIRCUIT)	
31	GND (D)		GND (DIGITAL CIRCUIT)	
32	GND (D)		GND (DIGITAL CIRCUIT)	

P214 A' (S7)				
NO.	PIN NAME	I/O	DESCRIPTION	REMARKS
1				
2	F-SER A DATA +	O	FRONT CERIAL A DATA	SYS→FRONT
3	F-SER A DATA -	O		
4	F-SER A EN +	O	FRONT CERIAL A ENEBLE	SYS→FRONT
5	F-SER A EN -	O		
6	S-SER A DATA	O	SERVO SERIAL A DATA	SYS→SERVO
7	S-SER B DATA	I	SERVO SERIAL B DATA	SYS←SERVO
8	S-SER CLK	O	SERVO SERIAL CLOCK	
9	S-FG	I	S-REEL FG	CODER 1
10	CASS DET A	I	CASSETTE DATECTA	
11	S PHOTE	I	SUPPLY PHOTO	
12	T PHOTE	I	TAKE UP PHOTE	
13	SUB LOAD START	I		
14	SUB LOAD END	I		
15	CASS DET F	I	CASSETTE DATECT F	USER C (L)
16	CASS DET R	I	CASSETTE DETECT R	USER C (S,M)
17	CASS DET S	I	CASSETTE DETECT S	USER A (ALL)
18	CASS DET T	I	CASSETTE DETECT T	USER B (V/CTL)
19	SER H SW	I	SERIAL HEAD SWITCH	
20	REC MODE	O		
21	PB MODE	O		
22	REC CURR CH0	O		
23	REC CURR CH1	O		
24				
25	-5V (A)		-5V (ANALOG CIRCUIT)	
26	+5V (A)		+5V (ANALOG CIRCUIT)	
27	-12V (A)		-12V (ANALOG CIRCUIT)	
28	+12V (A)		+12V (ANALOG CIRCUIT)	
29	+15V (UN)		+15V (UNREGULATED)	
30	+8V (UN)		+8V (UNREGULATED)	
31	GND (A)		GND (ANALOG CIRCUIT)	
32	GND (A)		GND (ANALOG CIRCUIT)	

P213 B (S7)				
NO.	PIN NAME	I/O	DESCRIPTION	REMARKS
1	GND (D)		GND (DIGITAL CIRCUIT)	
2	AV AD 1	I/O	AV ADDRESS DATA BUS 1	
3	AV AD 4	I/O	AV ADDRESS DATA BUS 4	
4	AV AD 7	I/O	AV ADDRESS DATA BUS 7	
5	AV AB 9	I	AV ADDRESS DATA BUS 9	
6	AV AB 12	I	AV ADDRESS DATA BUS 12	
7	AV AB 15	I	AV ADDRESS DATA BUS 15	
8	AV WR	I	AV WRITE	
9	SYS AB 0	O	SYSCON ADDRESS BUS 0	
10	SYS AB 1	O	SYSCON ADDRESS BUS 1	
11	SYS AB 2	O	SYSCON ADDRESS BUS 2	
12	SYS AB 3	O	SYSCON ADDRESS BUS 3	
13	SYS AB 4	O	SYSCON ADDRESS BUS 4	
14	SYS AB 5	O	SYSCON ADDRESS BUS 5	
15	SYS AB 6	O	SYSCON ADDRESS BUS 6	
16	SYS AB 7	O	SYSCON ADDRESS BUS 7	
17	SYS AB 8	O	SYSCON ADDRESS BUS 8	
18	SYS AB 9	O	SYSCON ADDRESS BUS 9	
19	SYS AB 10	O	SYSCON ADDRESS BUS 10	
20	VCP RESET	O	AV CPU RESET	
21	CAP RST	O	CAPSTAN RESET	
22	MCONT 6	O	MECH CONTROL 6	
23	S BAK ON	O	SUPPLY BRAKE ON	
24	STP ON	O	STOP ON	
25	MCONT 3	O	MECH CONTROL 3	
26	S REEL DRV ON	O	SUPPLY REEL DRIVE ON	
27				
28	-5V (D)		-5V (DIGITAL CIRCUIT)	
29	+5V (D)		+5V (DIGITAL CIRCUIT)	
30	+5V (D)		+5V (DIGITAL CIRCUIT)	
31	GND (D)		GND (DIGITAL CIRCUIT)	
32	GND (D)		GND (DIGITAL CIRCUIT)	

P214 B' (S7)				
NO.	PIN NAME	I/O	DESCRIPTION	REMARKS
1		I		
2	F-SER B DATA +	I	FRONT SERIAL B DATA	FRONT→SYS
3	F-SER B DATA -	I		
4	F-SER B EN +	I	FRONT SERIAL B ENABLE	FRONT→SYS
5	F-SER B EN -	I		
6	SER ADR0	O	SERVO SERIAL ADDRESS	DATA ADDRESS
7	SER ADR1	O		
8	SER ADR2	O		
9	T-FG	I	T-REEL FG	
10	CASS DET B	I	CASSETTE DETECT B	CODER 2
11	CASS IN SW L	I	CASSETTE IN SWITCH LEFT	
12	CASS UP SW	I	CASSETTE UP SWITCH	
13	L CASS IN	I	L CASSETTE IN	
14	MAIN LOAD START	I		
15	MAIN LOAD END	I		
16	MAIN LOAD CENTER	I		
17	SENS LED A	O	SENSOR LED A	
18	SENS LED K	O	SENSOR LED K	
19	AUTO OFF LAMP	O		
20	SUB LOAD CEN	I	SUB LOADING CENTER	
21	TEST MODE	O		
22	EQ GAIN CH0	O	EQUALIZER GAIN CH0	
23	EQ GAIN CH1	O	EQUALIZER GAIN CH1	
24				
25	-5V (A)		-5V (ANALOG CIRCUIT)	
26	+5V (A)		+5V (ANALOG CIRCUIT)	
27	-12V (A)		-12V (ANALOG CIRCUIT)	
28	+12V (A)		+12V (ANALOG CIRCUIT)	
29	+15V (UN)		+15V (UNREGULATED)	
30	+8V (UN)		+8V (UNREGULATED)	
31	GND (A)		GND (ANALOG CIRCUIT)	
32	GND (A)		GND (ANALOG CIRCUIT)	

P213 C (S7)				
NO.	PIN NAME	I/O	FUNCTION	REMARKS
1	GND (D)		GND (DIGITAL CIRCUIT)	
2	AV AD 2	I/O	AV ADDRESS DATA BUS 2	
3	AV AD 5	I/O	AV ADDRESS DATA BUS 5	
4	AV ALE	I		
5	AV AB 10	I	AV ADDRESS BUS 10	
6	AV AB 13	I	AV ADDRESS BUS 13	
7	AV SYS INT	O	AV SYSCON INTERRUPT	
8	AV BUSY	O		
9	SYS RESET	O		
10	SYS IORD	O	SYSCON IO READ	
11	SYS IOWR	O	SYSCON IO WRITE	
12	SYS MERD	O	SYSCON MEMORY READ	
13	SYS MEWR	O	SYSCON MEMORY WRITE	
14	SYS BUSY	I	SYSCON BUSY	
15	SYS CS TC	O	SYSCON CHIP SELECT TC	
16	SYS CS REMT	O	SYSCON CHIP SELECT REMOTE	
17	REMT INT	I	REMOTE INTERRUPT	
18				
19				
20				
21	REEL RST	O	REEL RESET	
22	MCONT 7	O	MECH CONTROL 7	
23	T BAK ON	O	TAKE UP BRAKE ON	
24	CLEAN ON	O		
25	MCONT 4	O	MECH CONTROL 4	
26	MCONT 8	O	MECH CONTROL 8	
27				
28	-5V (D)		-5V (DIGITAL CIRCUIT)	
29	+5V (D)		+5V (DIGITAL CIRCUIT)	
30	+5V (D)		+5V (DIGITAL CIRCUIT)	
31	GND (D)		GND (DIGITAL CIRCUIT)	
32	GND (D)		GND (DIGITAL CIRCUIT)	

P214 C' (S7)				
NO.	PIN NAME	I/O	DESCRIPTION	REMARKS
1		O		
2	F-SER STB +	O	FRONT SERIAL STROBE	
3	F-SER STB -	O		
4	F-SER CLK +	O	FRONT SERIAL CLOCK	
5	F-SER CLK -	O		
6	S-SER SEL 0	O	SERVO SERIAL SELECT	CPU SELECT
7	S-SER SEL 1	O		
8	CAP DIR	I	CAPSTAN DIRECTION	
9	CAP FGP	I	CAPSTAN FG PULSE	
10	CASS DET C	I	CASSETTE DETECT C	CODER 3
11	CASS IN SW R	I	CASSETTE IN SW RIGHT	
12	CASS DOWN SW	I	CASSETTE DOWN SWITCH	
13	M CASS IN	I	M CASSETTE IN	
14	REEL POS FRONT	I	REEL POSITION FRONT	
15	REEL POS CENTER	I	REEL POSITION CENTER	
16	REEL POS BACK	I	REEL POSITION BACK	
17	DEW SENS	I	DEW SENSOR	
18	EJECT KEY	I		
19	EJECT LAMP	O		
20	RF WFM SELECT 0	O		
21	RF WFM SELECT 1	O		
22	EQ FREQ CH 0	O	EQUALIZER FREQUENCY CH0	
23	EQ FREQ CH 1	O	EQUALIZER FREQUENCY CH1	
24				
25	-5V (A)		-5V (ANALOG CIRCUIT)	
26	+5V (A)		+5V (ANALOG CIRCUIT)	
27	-12V (A)		-12V (ANALOG CIRCUIT)	
28	+12V (A)		+12V (ANALOG CIRCUIT)	
29	+15V (UN)		+15V (UNREGULATED)	
30	+8V (UN)		+8V (UNREGULATED)	
31	GND (A)		GND (ANALOG CIRCUIT)	
32	GND (A)		GND (ANALOG CIRCUIT)	

P215 A (S8)				
NO.	PIN NAME	I/O	FUNCTION	REMARKS
1	GND (D)		GND (DIGITAL CIRCUIT)	
2	AV AD 0	I	AV ADDRESS DATA BUS 0	
3	AV AD 3	I	AV ADDRESS DATA BUS 3	
4	AV AD 6	I	AV ADDRESS DATA BUS 6	
5	AV AB 8	I	AV ADDRESS BUS 8	
6	AV AB 11	I	AV ADDRESS BUS 11	
7	AV AB 14	I	AV ADDRESS BUS 14	
8	AV RD	I	AV READ	
9	AV RESET	I	AV RESET	
10				
11				
12	ASD 1	I	ANALOG AUDIO INPUT CH1/CH2	
13				
14	DSD 1	O	PLAYBACK DATA OUTPUT CH1/CH2	
15				
16	PBD 1 2	I	PLAYBACK DATA CH1/CH2	
17	STO	I	STATUS DATA	
18				
19				
20	MUTE 1 2	I	MUTE CH1/CH2	
21				
22	VALIDF	I	VALID FLAG	
23				
24	AU DATA IN 0	O	AUDIO REC DATA	
25	AU DATA IN 3	O	AUDIO REC DATA	
26	AU DATA IN 6	O	AUDIO REC DATA	
27				
28	-5V (D)		-5V (DIGITAL CIRCUIT)	
29	+5V (D)		+5V (DIGITAL CIRCUIT)	
30	+5V (D)		+5V (DIGITAL CIRCUIT)	
31	GND (D)		GND (DIGITAL CIRCUIT)	
32	GND (D)		GND (DIGITAL CIRCUIT)	

P216 A' (S8)				
NO.	PIN NAME	I/O	DESCRIPTION	REMARKS
1				
2	PB RST	I	PLAYBACK RESET	
3				
4	DBCK L	I	AUDIO MASTER CLOCK LOW	
5	NC.			
6	ST 0	O	STATUS DATA 0	
7	NC.			
8	FSA	I	AUDIO SAMPLING CLOCK	
9				
10				
11				
12				
13				
14				
15				
16	NC.			
17				
18	DAI 1A	I	DIGITAL AUDIO INPUT 1A	
19	DAI 2A	I	DIGITAL AUDIO INPUT 2A	
20	DAO 1A	O	DIGITAL AUDIO OUTPUT 1A	
21	DAO 2A	O	DIGITAL AUDIO OUTPUT 2A	
22	VA CNT 1A	O	VA CONTROL 1A	
23	VA CNT 2A	O	VA CONTROL 2A	
24				
25	-5V (A)		-5V (ANALOG CIRCUIT)	
26	+5V (A)		+5V (ANALOG CIRCUIT)	
27	-12V (A)		-12V (ANALOG CIRCUIT)	
28	+12V (A)		+12V (ANALOG CIRCUIT)	
29	+15V (UN)		+15V (UNREGULATED)	
30	+8V (UN)		+8V (UNREGULATED)	
31	GND (A)		GND (ANALOG CIRCUIT)	
32	GND (A)		GND (ANALOG CIRCUIT)	

P215 B (S8)				
NO.	PIN NAME	I/O	FUNCTION	REMARKS
1	NC.			
2	AV AD 1	I	AV ADDRESS DATA BUS 1	
3	AV AD 4	I	AV ADDRESS DATA BUS 4	
4	AV AD 7	I	AV ADDRESS DATA BUS 7	
5	AV AB 9	I	AV ADDRESS BUS 9	
6	AV AB 12	I	AV ADDRESS BUS 12	
7	AV AB 15	I	AV ADDRESS BUS 15	
8	AV WR	I	AV WRITE	
9				
10				
11				
12				
13				
14				
15	DSD L	O	PLAYBACK DATA OUTPUT L/R	
16	PBD 34	I	PLAYBACK DATA CH3/CH4	
17	STFLG	I	STATUS ERROR FLAG	
18				
19				
20	MUTE 3 4	I	MUTE CH3/CH4	
21				
22	PB5F	I	PLAYBACK LEAP FIELD	
23				
24	AU DATA IN 1	O	AUDIO REC DATA	
25	AU DATA IN 4	O	AUDIO REC DATA	
26	AU DATA IN 7	O	AUDIO REC DATA	
27				
28	-5V (D)		-5V (DIGITAL CIRCUIT)	
29	+5V (D)		+5V (DIGITAL CIRCUIT)	
30	+5V (D)		+5V (DIGITAL CIRCUIT)	
31	GND (D)		GND (DIGITAL CIRCUIT)	
32	GND (D)		GND (DIGITAL CIRCUIT)	

P216 B' (S8)				
NO.	PIN NAME	I/O	DESCRIPTION	REMARKS
1				
2	NC.			
3				
4	DBCK	I	AUDIO MASTER CLOCK	
5	NC.			
6	ST 1	O	STATUS DATA 1	
7	FSD	O	DIGITAL IF SAMPLING CLOCK	
8				
9				
10				
11	NC.			
12				
13				
14				
15				
16	CUE D C	O	D MIX DATA COLD	
17				
18	DAI 1B	I	DIGITAL AUDIO INPUT 1B	
19	DAI 2B	I	DIGITAL AUDIO INPUT 2B	
20	DAO 1B	O	DIGITAL AUDIO OUTPUT 1B	
21	DAO 2B	O	DIGITAL AUDIO OUTPUT 2B	
22	VA CNT 1B	O	VA CONTROL 1B	
23	VA CNT 2B	O	VA CONTROL 2B	
24				
25	-5V (A)		-5V (ANALOG CIRCUIT)	
26	+5V (A)		+5V (ANALOG CIRCUIT)	
27	-12V (A)		-12V (ANALOG CIRCUIT)	
28	+12V (A)		+12V (ANALOG CIRCUIT)	
29	+15V (UN)		+15V (UNREGULATED)	
30	+8V (UN)		+8V (UNREGULATED)	
31	GND (A)		GND (ANALOG CIRCUIT)	
32	GND (A)		GND (ANALOG CIRCUIT)	

P215 C (S8)				
NO.	PIN NAME	I/O	FUNCTION	REMARKS
1	NC.			
2	AV AD 2	I	AV ADDRESS DATA BUS 2	
3	AV AD 5	I	AV ADDRESS DATA BUS 5	
4	AV ALE	I	AV ADDRESS LOAD ENABLE	
5	AV AB 10	I	AV ADDRESS BUS 10	
6	AV AB 13	I	AV ADDRESS BUS 13	
7				
8				
9				
10				
11				
12	ASD 3	I	ANALOG AUDIO INPUT CH3/CH4	
13				
14	DSD 3	O	PLAYBACK DATA OUTPUT CH3/CH4	
15				
16				
17	BLK SYNC	I	STATUS SYNC	
18				
19				
20				
21				
22	PB FLD	I	PLAYBACK FIELD	
23				
24	AU DATA IN 2	O	AUDIO REC DATA	
25	AU DATA IN 5	O	AUDIO REC DATA	
26	AU DATA IN GND		AUDIO REC DATA GND	
27				
28	-5V (D)		-5V (DIGITAL CIRCUIT)	
29	+5V (D)		+5V (DIGITAL CIRCUIT)	
30	+5V (D)		+5V (DIGITAL CIRCUIT)	
31	GND (D)		GND (DIGITAL CIRCUIT)	
32	GND (D)		GND (DIGITAL CIRCUIT)	

P216 C' (S8)				
NO.	PIN NAME	I/O	DESCRIPTION	REMARKS
1				
2	DIF CK	O	DIGITAL INTERFACE CLOCK	
3	DIF CK L	O	DIGITAL INTERFACE CLOCK LOW	
4				
5				
6	ST 2	O	STATUS DATA 2	
7				
8	NC.			
9	NC.			
10				
11	CUE METER	I	CUE METER	
12				
13				
14				
15				
16	CUE D H	O	D MIX DATA HOT	
17				
18	DAI 1 GND		DIGITAL AUDIO INPUT 1 GND	
19	DAI 2 GND		DIGITAL AUDIO INPUT 2 GND	
20	DAO 1 GND		DIGITAL AUDIO OUTPUT 1 GND	
21	DAO 2 GND		DIGITAL AUDIO OUTPUT 2 GND	
22	VA CNT 1 GND		VA CONTROL 1 GND	
23	VA CNT 2 GND		VA CONTROL 2 GND	
24				
25	-5V (A)		-5V (ANALOG CIRCUIT)	
26	+5V (A)		+5V (ANALOG CIRCUIT)	
27	-12V (A)		-12V (ANALOG CIRCUIT)	
28	+12V (A)		+12V (ANALOG CIRCUIT)	
29	+15V (UN)		+15V (UNREGULATED)	
30	+8V (UN)		+8V (UNREGULATED)	
31	GND (A)		GND (ANALOG CIRCUIT)	
32	GND (A)		GND (ANALOG CIRCUIT)	

P217 A (S9)				
NO.	PIN NAME	I/O	FUNCTION	REMARKS
1	GND (D)		GND (DIGITAL CIRCUIT)	
2	AV AD 0		AV ADDRESS DATA BUS 0	
3	AV AD 3		AV ADDRESS DATA BUS 3	
4	AV AD 6		AV ADDRESS DATA BUS 6	
5	AV AB 8		AV ADDRESS BUS 8	
6	AV AB 11		AV ADDRESS BUS 11	
7	AV AB 14		AV ADDRESS BUS 14	
8	AV RD		AV READ	
9	AV RESET			
10				
11				
12				
13				
14				
15				
16				
17				
18				
19				
20				
21				
22				
23				
24				
25				
26				
27				
28	-5V (D)		-5V (DIGITAL CIRCUIT)	
29	+5V (D)		+5V (DIGITAL CIRCUIT)	
30	+5V (D)		+5V (DIGITAL CIRCUIT)	
31	GND (D)		GND (DIGITAL CIRCUIT)	
32	GND (D)		GND (DIGITAL CIRCUIT)	

P218 A' (S9)				
NO.	PIN NAME	I/O	DESCRIPTION	REMARKS
1				
2				
3	AV VS		AV V SYNC	
4	AV CS		AV COMPOSITE SYNC	
5	AV SC		AV SUB CARRIER	
6	AV LALT		AV ALTERNATE	
7	AV FRM		AV FRAME	
8	AV CF		AV COLOR FRAME	
9	AV HO		AV H OUT	
10	AV CLK			
11				
12	AV DATA 0			
13	AV DATA 1			
14	AV DATA 2			
15	AV DATA 3			
16	AV DATA 4			
17	AV DATA 5			
18	AV DATA 6			
19	AV DATA 7			
20				
21				
22				
23	GND (A)		GND (ANALOG CIRCUIT)	
24	+5V (A)		+5V (ANALOG CIRCUIT)	
25	-5V (A)		-5V (ANALOG CIRCUIT)	
26	+5V (A)		+5V (ANALOG CIRCUIT)	
27	-12V (A)		-12V (ANALOG CIRCUIT)	
28	+12V (A)		+12V (ANALOG CIRCUIT)	
29	+15V (UN)		+15V (UNREGULATED)	
30	+8V (UN)		+8V (UNREGULATED)	
31	GND (A)		GND (ANALOG CIRCUIT)	
32	GND (A)		GND (ANALOG CIRCUIT)	

P217 B (S9)				
NO.	PIN NAME	I/O	FUNCTION	REMARKS
1	GND (D)		GND (DIGITAL CIRCUIT)	
2	AV AD 1		AV ADDRESS DATA BUS 1	
3	AV AD 4		AV ADDRESS DATA BUS 4	
4	AV AD 7		AV ADDRESS DATA BUS 7	
5	AV AB 9		AV ADDRESS BUS 9	
6	AV AB 12		AV ADDRESS BUS 12	
7	AV AB 15		AV ADDRESS BUS 15	
8	AV WR		AV WRITE READ	
9				
10				
11				
12				
13				
14				
15				
16				
17				
18				
19				
20				
21				
22				
23				
24				
25				
26				
27				
28	-5V (D)		-5V (DIGITAL CIRCUIT)	
29	+5V (D)		+5V (DIGITAL CIRCUIT)	
30	+5V (D)		+5V (DIGITAL CIRCUIT)	
31	GND (D)		GND (DIGITAL CIRCUIT)	
32	GND (D)		GND (DIGITAL CIRCUIT)	

P218 B' (S9)				
NO.	PIN NAME	I/O	DESCRIPTION	REMARKS
1				
2				
3				
4	AV CS L		ANALOG VIDEO COMP SYNC L	
5	AV SC L		ANALOG VIDEO SUB CARRIER L	
6				
7				
8				
9	AV HO L		AV H OUT L	
10	AV CLK L		ANALOG VIDEO CLK L	
11				
12	AV DATA 0 L			
13	AV DATA 1 L			
14	AV DATA 2 L			
15	AV DATA 3 L			
16	AV DATA 4 L			
17	AV DATA 5 L			
18	AV DATA 6 L			
19	AV DATA 7 L			
20				
21	REC INPUT VIDEO GND			
22				
23	GND (A)		GND (ANALOG CIRCUIT)	
24	+5V (A)		+5V (ANALOG CIRCUIT)	
25	-5V (A)		-5V (ANALOG CIRCUIT)	
26	+5V (A)		+5V (ANALOG CIRCUIT)	
27	-12V (A)		-12V (ANALOG CIRCUIT)	
28	+12V (A)		+12V (ANALOG CIRCUIT)	
29	+15V (UN)		+15V 9UNREGULATED)	
30	+8V (UN)		+8V (UNREGULATED)	
31	GND (A)		GND (ANALOG CIRCUIT)	
32	GND (A)		GND (ANALOG CIRCUIT)	

P217 C (S9)				
NO.	PIN NAME	I/O	FUNCTION	REMARKS
1	GND (D)		GND (DIGITAL CIRCUIT)	
2	AV AD 2		AV ADDRESS DATA BUS 2	
3	AV AD 5		AV ADDRESS DATA BUS 5	
4	AV ALE		AV ADDRES LOAD ENABLE	
5	AV AB 10		AV ADDRESS BUS 10	
6	AV AB 13		AV ADDRESS BUS 13	
7				
8				
9				
10				
11				
12				
13				
14				
15				
16				
17				
18				
19				
20				
21				
22				
23				
24				
25				
26				
27				
28	-5V (D)		-5V (DIGITAL CIRCUIT)	
29	+5V (D)		+5V (DIGITAL CIRCUIT)	
30	+5V (D)		+5V (DIGITAL CIRCUIT)	
31	GND (D)		GND (DIGITAL CIRCUIT)	
32	GND (D)		GND (DIGITAL CIRCUIT)	

P218 C' (S9)				
NO.	PIN NAME	I/O	DESCRIPTION	REMARKS
1				
2				
3				
4				
5				
6				
7				
8				
9				
10				
11				
12				
13				
14				
15				
16				
17				
18				
19				
20				
21	REC INPUT VIDEO			
22				
23	GND (A)		GND (ANALOG CIRCUIT)	
24	+5V (A)		+5V (ANALOG CIRCUIT)	
25	-5V (A)		-5V (ANALOG CIRCUIT)	
26	+5V (A)		+5V (ANALOG CIRCUIT)	
27	-12V (A)		-12V (ANALOG CIRCUIT)	
28	+12V (A)		+12V (ANALOG CIRCUIT)	
29	+15V (UN)		+15V (UNREGULATED)	
30	+8V (UN)		+8V (UNREGULATED)	
31	GND (A)		GND (ANALOG CIRCUIT)	
32	GND (A)		GND (ANALOG CIRCUIT)	

ICs INFORMATION

CONTENTS

PART NO.	REF. NO.	REF. PAGE
74AC02SJ	7402	5
74AC157SJ	74157	8
74AC374SJ	74374	11
74AC74SJ	7474	13
74AC86SJ	7486	13
74ACT240SJ	74240	9
74F00SJ	7400	5
74F112SJ	74112	6
74F11SJ-R1	7411	6
74F153SJ-R1	74153	8
74F163ASJ-R1	74163	8
74F241SJ-R1	74241	8
74F283SJ	74283	10
74F398SC	74398	11
74F399SJ	74399	11
74F399SJ-R1	74399	11
74F540SJ	74540	12
74F541SJ	74541	12
74F541SJ-R1	74541	12
74F574SJ	74574	12
74F574SJ-R1	74574	12
74F74SJ	7474	13
74F74SJ-R1	7474	13
74F821SC	74821	
74F86SJ	7486	13
74FCT574ASC	74574	12
AD707KR	AD707KR	60
AD7535JN	AD7535	13
AD9300KQ	AD9300	13
AD96685BQ	AD96685	13
ADM50ND	ADM50ND	65
AK5326	AK5326	14
AM26LS31M	AM26LS31PC	14
AM26LS32M	AM26LS32PC	14
AM27C256200D	AM27C256	15
AN3821K		
AN6558	AN6558/S	66
AN6558S	AN6558/S	66
AN7805	AN7805	15
AN7818F		
AN78L05	AN78L00	15
AN78L09	AN78L00	15
AN78N05	AN78N00	15
AN78N09	AN78N00	15
AN78N12	AN78N00	15
AN7918F		
AN79L05	AN79L00	15
AN79L09	AN79L00	15
AN79N05	AN79N00	16
AN79N09	AN79N00	16
AN79N12	AN79N00	16
AN91A12S	AN91A12S	66
AN96A02S		
BA301	BA301	66
BA6110	BA6110	16
BA6238AU2M	BA6238	16
CD74AC00M	7400	5
CD74AC04M	7404	6
CY7C136-35	CY7C136-35	55
CY7C136-35JC	CY7C136-35	55
CXD1175M	CXD1175M	66
CY261-45WC	CY261-45WC	16
D65180GD031		
DAC10-GX	DAC10-GX	17
DAC1222LCN		
DS1225Y-200		
DS9637ACN	DS9637A	17
GAL6001-30P	GAL6001	21
HA19505	HA19505	60
HD146818AFP	HD146818	61
HD63484PS8	HD63484	61
HD64180ZP8	HD64180	22
HD68HC000P10	HD68000Y10	68
HD74HC674P	74674	59
HM628128LFP7	HM628128LFP7	66
HM62832P-35	HM62832P-35	22
IDTFCT399ASO	IDTFCT399ASO	21
IDTFCT823BSO	IDTFCT823BSO	23
IDTFCT825AP	IDTFCT825AP	23
IDTFCT825ASO	IDTFCT825ASO	67
L29C520PC22		
L7A0341		
L7A0343	L7A0343	24
L7A0344		
L7A0348		
L7A0378		
L7A0541	L7A0541	25
L7A0543	L7A0543	68
L7A0544		
L7A0545		
L7A0651	L7A0651	25
L7A0674	L7A0674	26
L7A0782	L7A0782	27
LM2902M	LM2902	25
LM2903M	LM2903M	62
LM2904M	LM2904	25
LM311M	LM311M	62
LM318N	LM318N	64
LM319M	LM319	25
LM337T	LM337	26

PART NO.	REF. NO.	REF. PAGE
M5165FP-10L	M5165FP-10L	28
M51951BML	M51951	27
M5206P	M5206P	29
M5256BFP-70	M5256BFP-70	28
M54514AP		
M5M4464AL-12	M5M4464AL-12	29
M5M5257P-35	M5M5257P-35	29
MAX690CPA	MAX690	63
MB121M246	MB121M246	30
MB40576P	MB40576P	30
MB621926	MB621926	69
MB813AZ	MB813AZ	30
MB81C68A35PS	MB81C68A35PS	31
MB81C78A35PF	MB81C78A35PF	31
MB81C79A35PF	MB81C79A35PF	32
MB8289-25PF	MB8289-25PF	32
MB8421-90LPF	MB8421-90LPF	69
MB89363BPF	MB89363	62
MC10104L	MC10104	32
MC10115L	MC10115	33
MC10116L	MC10116	33
MC10124L	MC10124	33
MC10125L	HD10125	19
MC10131L	MC10131	33
MC10H102L	MC10H102	33
MC10H107L	MC10H107	33
MC10H116L	MC10H116	33
MC10W125		
MC10H176L	MC10H176	34
MC14011BF	4011	1
MC14012BF	4012	1
MC14013BF	4013	1
MC14015BF-R	4015	1
MC14027BF	4027	1
MC14046BF	4046	2
MC14049UBF	4049	2
MC14050BF	4050	2
MC14053BF	4053	3
MC14066BF	4066	4
MC14069UBF	4069	4
MC14073BF	4073	4
MC14081BF	4081	4
MC14094BF	4094	4
MC14520BF	4520	5
MC14526BF	4526	5
MC14528BF-R	4528	5
MC14538BF	4538	5
MC14539BF	4539	58
MC14556BF		
MC1488M	1488	57
MC1489M	1489	57
MC1495L	MC1495L	34
MC34051M	MC34051	34
MC34051P	MC34051	34
MC4044P	MC4044	69

PART NO.	REF. NO.	REF. PAGE
MC74HC00AF	7400	5
MC74HC02AF	7402	5
MC74HC04AF	7404	6
MC74HC08AF	7408	6
MC74HC109F	74109	6
MC74HC10F	7410	6
MC74HC11F	7411	6
MC74HC125AF	74125	6
MC74HC138AF	74138	7
MC74HC139AF	74139	7
MC74HC14AF	7414	7
MC74HC153F	74153	8
MC74HC157AF	74157	8
MC74HC158F	74157	8
MC74HC161F	74161	8
MC74HC163F	74163	8
MC74HC164F	74164	8
MC74HC165F	74165	8
MC74HC175F	74175	9
MC74HC20F	7420	9
MC74HC237F	74237	7
MC74HC240AF	74240	9
MC74HC244AF	74244	10
MC74HC244AFR	74244	10
MC74HC245AF	74245	10
MC74HC257F	74257	10
MC74HC273F	74273	10
MC74HC27F	7427	10
MC74HC32AF	7432	11
MC74HC365F	74365	11
MC74HC393F	74393	11
MC74HC4040F	4040	2
MC74HC4050F	4050	2
MC74HC4051F	4051	3
MC74HC4052F	4052	3
MC74HC4053F	4053	3
MC74HC4066F	4066	4
MC74HC4075F	4075	4
MC74HC4538F	4538	5
MC74HC540F	74540	12
MC74HC541F	74541	12
MC74HC541N	74541	12
MC74HC573AF	74573	59
MC74HC573F	74573	59
MC74HC574AF	74574	12
MC74HC574AN	74574	12
MC74HC574F	74574	12
MC74HC595AF	74595	12
MC74HC688F	74688	60
MC74HC74AF	7474	13
MC74HC85F	7485	60
MC74HC86F	7486	13
MC74HCT245AF	74245	10
MC74HCU04F	7404	6
MM74HC166M	74166	9

PART NO.	REF. NO.	REF. PAGE
MM74HC221AM	74221	9
MN1287BF	MN1287	34
MN188166VHI5		
MN4030BS	4030	2
MN51040VPI	MN51040	35
MN53015VZW	MN53015VZW	35
MN53030VPR	MN53030VYA	37
MN53030VPT	MN53030VYA	37
MN53040VPQ	MN53040VPQ	36
MN53040VPS	MN53040VPS	36
MN56200VPV		
MN64730	MN64730	37
MN64731	MN64731	35
MN6631A	MN6631	36
MN67512VAVF	MN67512	65
MN67512VAVG	MN67512	65
MN8305S	MN8305S	38
MP6901	MP6901	38
MSM5210RS	MSM5210RS	39
N74F827D		
NE521D	NE521	38
NE5539D	NE5539	38
NE564D	NE564	38
NJM082BM	NJM082BM	39
NJM1496M	NJM1496	39
NJM2901M	NJM2901	39
NJM360M	NJM360M	70
NJM4558M	NJM4558	40
NJM5532MD	NJM5532	40
PC74HCT541TT	74541	12
PC74HCT574TT	74574	12
PU4124	PU4124	40
RC082BM		
RC084M		
RC4556MB	4556B	58
RC4560MD	RC4560MD	41
S-80230AG	S80230AG	41
S-81250HG	S81250HG	41
SDM251A20A10		
SN74ALS157AL	74157	8
SN74ALS244BS	74244	10
SN74ALA245AS	74245	10
SN74ALS574AS	74574	12
SN74ALS576AS	74576	12
SN74AS04NS	7404	6
SN74AS109NS	74109	6
SN74AS153NS	74153	8
SN74AS244NS	74244	10
SN74AS32NS	7432	11
SN74HCT541NS	74541	12
SN74LS05NS	7405	57
SN74LS08NS	7408	6
SN74LS123NS	74123	6
SN74LS151NS	74151	7
SN74LS221NS	74221	9

PART NO.	REF. NO.	REF. PAGE
SN74LS245NS	74245	10
SN74LS399N	74399	57
SN74LS399NS	74399	57
SN74LS541NS	74541	12
SN74LS541NSL	74541	12
SN74LS628NS	74628	12
SN74LS629NS	74629	59
SN74LS682NS	74682	13
SN74LS684NS	74684	13
SN74LS92NS	7492	13
SN74S1051NS	SN74S1051NS	56
SN74S85NS		
SN75158P	SN75158	41
SN75160AN	SN75160	42
SN75161BN	SN75161	42
TA7712F	TA7712	42
TC4S584F	TC4S584F	42
TC4S66F	TC4S66F	70
TC4S69F	TC4S69F	70
TC4S71F		
TC74HC123AF	74123	6
TC74HC148	74148	7
TC74HC193AF	74193	9
TC74HC283AF	74283	10
TC74HC4094F	4094	4
TC7S02FTE85R		
TC9122P	TC9122P	42
TDC1038N6C	TDC1038	43
TL082CPS	TL082	43
TL084CNS	TL084	43
TL1451CNS	TL1451CNS	44
TL431CLP	TL431	43
TL7705CPB	TL7705	44
TL7705CPSB	TL7705	44
TMPZ284C43AF6	TMPZ84C43AF6	44
TMS320C25FN		
TMS4C1060NL3	TMS4C1060	45
UPA1453H	UPA1453H	44
UPC1663G	UPC1663	46
UPC317H		
UPC319G2	UPC319	44
UPC339G	UPC339	44
UPC339G2	UPC339	44
UPC393G	UPC393	46
UPC4074G	UPC4074	46
UPC4082G	UPC4082	46
UPC451G	UPC451	46
UPC4558G2	UPC4558	46
UPC4572G2	UPC4572	46
UPC4741G	UPC4741	46
UPC494C	UPC494	47
UPC494G	UPC494	47
UPC494GS	UPC494	47
UPC624C	UPC624C	47
UPC78L08J	AN78L00	15

PART NO.	REF. NO.	REF. PAGE
UPC78N12H	AN78N00	15
UPC79L08J	AN79L00	15
UPD27C2001	UPD27C2001	56
UPD4051BG	4051	3
UPD4053BG	4053	3
UPD42101G-3	UPD42101G	47
UPD42102G-3	UPD42102G	48
UPD42505C-50	UPD42505C-50	48
UPD65013F101	UPD65013F101	49
UPD65022F046	UPD65022G046	48
UPD65022F210	UPD65022F210	50
UPD65042F024	UPD65042G024	48
UPD65061F032	UPD65061GF032	51
UPD71054GB	UPD71054G	54
UPD71055GB	UPD71055G	54
UPD7210C	UPD7210	63
UPD7503GB26	UPD7503G	53
UPD78C10CW	UPD78C10G	54
VCR0111	VCR0111	54
VSI0769B	GAL6001	21
VSI0770B	GAL6001	21
VSI0771B	GAL6001	21
VSI0772B	GAL6001	21
VSI0773B	GAL6001	21
VSI0774B	GAL6001	21
VSI0781	GAL22V10	20
VSI0782B	GAL6001	21
VSI0783	GAL22V10	20
VSI0784B	GAL6001	21
VSI0785	GAL16V8A	19
VSI0786B	GAL6001	21
VSI0787	GAL16V8A	19
VSI0788B	GAL6001	21
VSI0789	EPS448	18
VSI0790	EPS448	18
VSI0793	27HC256-55LC	57
VSI0794	27HC256-55LC	57
VSI0795	27HC256-55LC	57
VSI0796	EPM5032	18
VSI0799	EP610	17
VSI0800	EP910	17
VSI0801A	EPM5032	18
VSI0803B	GAL6001	21
VSI0804	EPM5032	18
VSI0806	EPM5032	18
VSI0808	EPM5032	18
VSI0810	EP610	17
VSI0812	EP610	17
VSI0814	EP610	17
VSI0816	EP610	17
VSI0817	EP610	17
VSI0818	EP610	17
VSI0820	EP910	17
VSI0821	EP610	17
VSI0823	EP610	17

PART NO.	REF. NO.	REF. PAGE
VSI0825	EP610	17
VSI0826	EP610	17
VSI0827	EPM5032	18
VSI0828	EP610	17
VSI0829	EP610	17
VSI0830	EP610	17
VSI0832	EP610	17
VSI0834	EP610	17
VSI0836	EP610	17
VSI0838	EP610	17
VSI0839	EP610	17
VSI0840	EPM5032	18
VSI0842	EPM5032	18
VSI0844	EPM5032	18
VSI0845	EPM5032	18
VSI0846	PEEL18CV8	40
VSI0847	PEEL22CV10	41
VSI0848	PEEL22CV10	41
VSI0849A	PEEL18CV8	40
VSI0850B	GAL6001	21
VSI0851	PEEL18CV8	40
VSI0853B	GAL6001	21
VSI0854	PEEL18CV8	40
VSI0855	PEEL18CV8	40
VSI0856	PEEL18CV8	40
VSI0857C	GAL6001	21
VSI0858C	GAL6001	21
VSI0860C	GAL6001	21
VSI0862B	GAL6001	21
VSI0864B	GAL6001	21
VSI0866B	GAL6001	21
VSI0870	27HC256-55LC	57
VSI0871	27HC256-55LC	57
VSI0872	27HC256-55LC	57
VSI0874	EPS448	18
VSI0876A	EPM5032	18
VSI0894A	EPM5032	18
VSI0895A	EPM5032	18
VSI0896	EPM5032	18
VSI0897	EPM5032	18
VSI0900A	AM27C128	14
VSI0903	GAL20V8A	67
VSI0904	GAL20V8A	67
VSI0906	EPM5032	18
VSI0907	EPM5032	18
VSI0908	EPM5032	18
VSI0918A	EPM5032	18
VSI0919A	EPM5032	18
VSI0920A	EPM5032	18
VSI0921B	EPM5032	18
VSI0923	D27HC65DX30	57
VSI0925	D27HC65DX30	57
VSI0926	EP910	17
VSI0927A	EPM5032	18
VSI0928A	EPM5032	18

PART NO.	REF. NO.	REF. PAGE
VSI0929	EP910	17
VSI0930B	GAL6001	21
VSI0931C	EPM5032	18
VSI0933A	EPM5032	18
VSI0935A	EPM5032	18
VSI0937B	EPM5032	18
VSI0939	EPM5032	18
VSI0941B	EPM5032	18
VSI0942A	EPM5032	18
VSI0943	EPM5032	18
VSI0949	GAL6001	21
VSI0950B	GAL6001	21
VSI0952A	EP910	17
VSI0962	AM27C128	14
VSI0964E	AM27C512200D	
VSI0966B	AM27C128	14
VSI0979B	AM27C512200D	
VSI0982	EPM5032	18
VSI0983	EPM5032	18
VSI0984	EPM5032	18
VSI0985	EPM5032	18
VSI0986	EPM5032	18
VSI0987	EPM5032	18
VSI0995	EP910	17
VSI1034	AM27C040150D	
VSI1035	AM27C040150D	
VSI1038	GAL20V8A	67
	AK27CX642	56
ZR33891LC-20	ZR33891	64
ZR33891PQC-20	ZR33891	64

NOTE: The following ICs which are not described on the REF. PAGE, are not contained the IC Block drawing in this issue.

4011
(QUAD 2-INPUT NAND GATE)

(TOP VIEW)

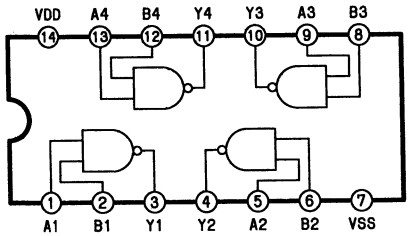

4012
(DUAL 4-INPUT NAND GATE)

(TOP VIEW)

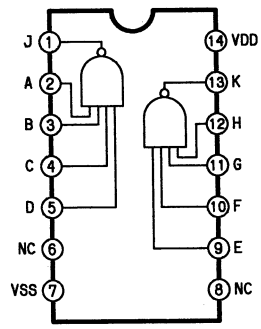

4013
(DUAL D-TYPE FLIP-FLOP)

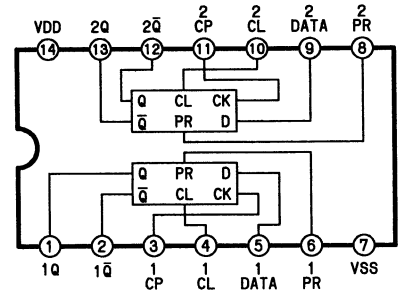

TRUTH TABLE

INPUTS				OUTPUTS	
CLOCK t	DATA	RESET	SET	Q	Q̄
⌐⌐	0	0	0	0	1
⌐⌐	1	0	0	1	0
⌐⌐	×	0	0	Q	Q̄
×	×	1	0	0	1
×	×	0	1	1	0
×	×	1	1	1	1

NO CHANGE

X=DON'T CARE
t=LEVEL CHANGE

4015
(DUAL 4-STAGE SHIFT REGISTER)

LOGIC DIAGRAM

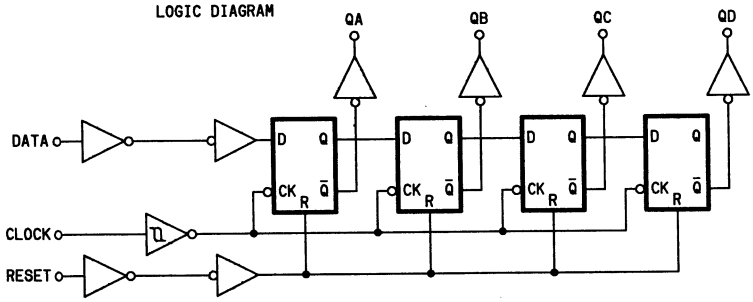

(TOP VIEW)

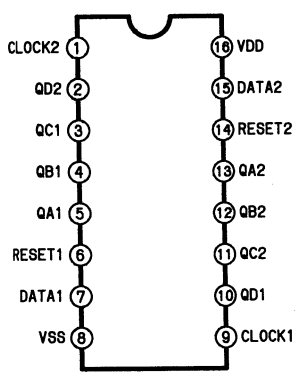

TRUTH TABLE

CL ▲	D	R	Q1	QN
⌐⌐	0	0	0	QN-1
⌐⌐	1	0	1	QN-1
⌐⌐	×	0	Q1	QN (NO CHANGE)
×	×	1	0	0

▲ LEVEL CHANGE
× DON'T CARE CASE

4027
(DUAL J-K MASTER-SLAVE FLIP-FLOP)

(TOP VIEW)

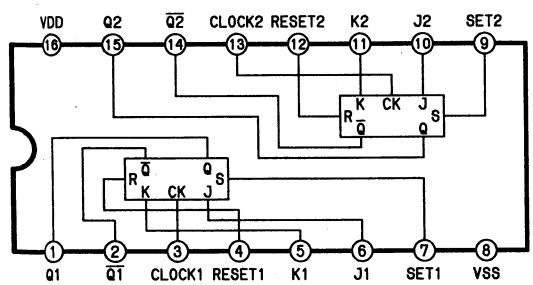

TRUTH TABLE

INPUT					OUTPUT	
C	J	K	S	R	QN+1	Q̄N+1
⌐⌐	L	L	L	L	QN	Q̄N
⌐⌐	L	H	L	L	L	H
⌐⌐	H	L	L	L	H	L
⌐⌐	H	H	L	L	Q̄N	QN
⌐⌐	×	×	L	L	QN	Q̄N
×	×	×	L	H	L	H
×	×	×	H	L	H	L
×	×	×	H	H	H	H

×=DON'T CARE CASE

4030
(QUAD EXCLUSIVE OR GATE)

(TOP VIEW)

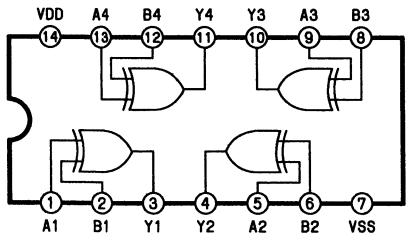

TRUTH TABLE

A	B	Y
L	L	L
H	L	H
L	H	H
H	H	L

4040
(12-STAGE RIPPLE CARRY BINARY COUNTER/DIVIDER)

(TOP VIEW)

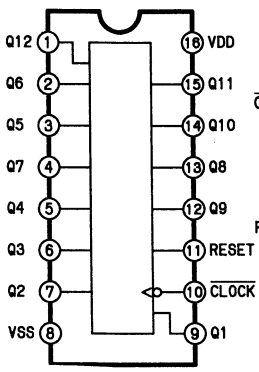

LOGIC DIAGRAM

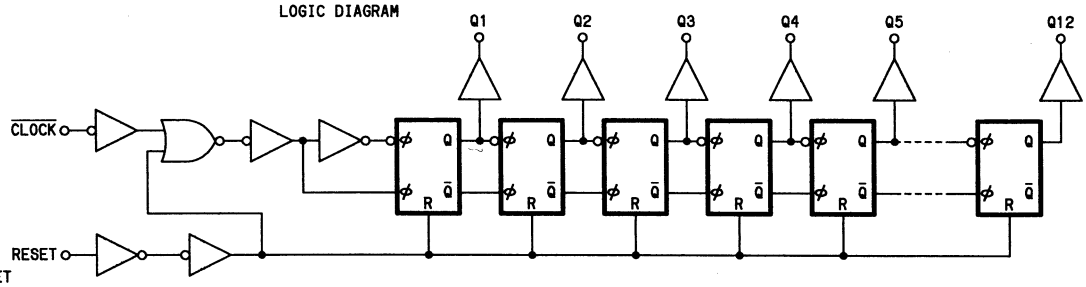

TRUTH TABLE

CLOCK	RESET	QN OUT
X	H	L
↑	L	NO COUNT
↓	L	BI COUNT

X : H or L

4046
(PHASE-LOCKED LOOP)

(TOP VIEW)

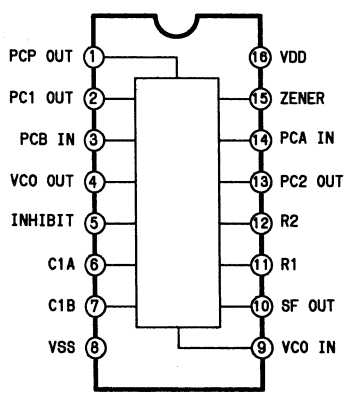

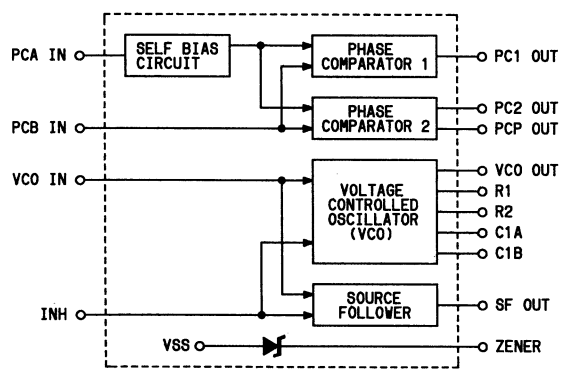

4049
(HEX.INVERTING BUFFER/CONVERTER)

(TOP VIEW)

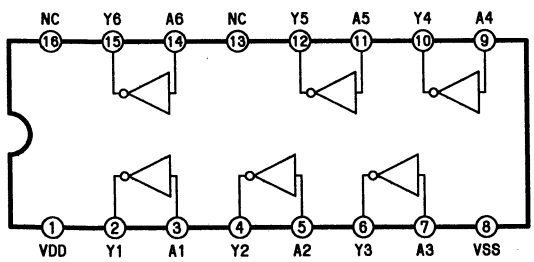

4050
(HEX.BUFFER/CONVERTER)

(TOP VIEW)

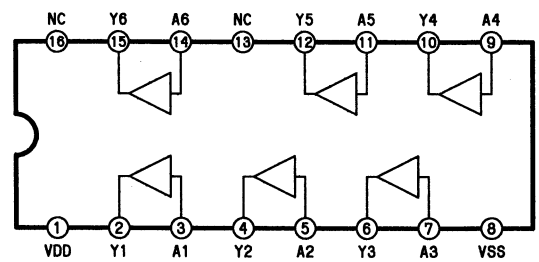

4051
(SINGLE 8-CHANNEL MULTIPLEXER/DEMULTIPLEXER)

(TOP VIEW)

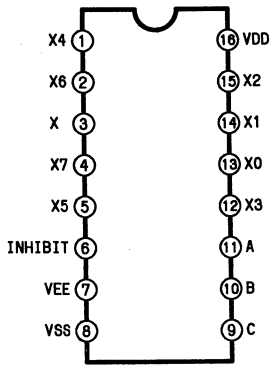

TRUTH TABLE

INPUT STATES				"ON" CHANNEL(S)
INHIBIT	C	B	A	
0	0	0	0	0
0	0	0	1	1
0	0	1	0	2
0	0	1	1	3
0	1	0	0	4
0	1	0	1	5
0	1	1	0	6
0	1	1	1	7
1	X	X	X	NONE

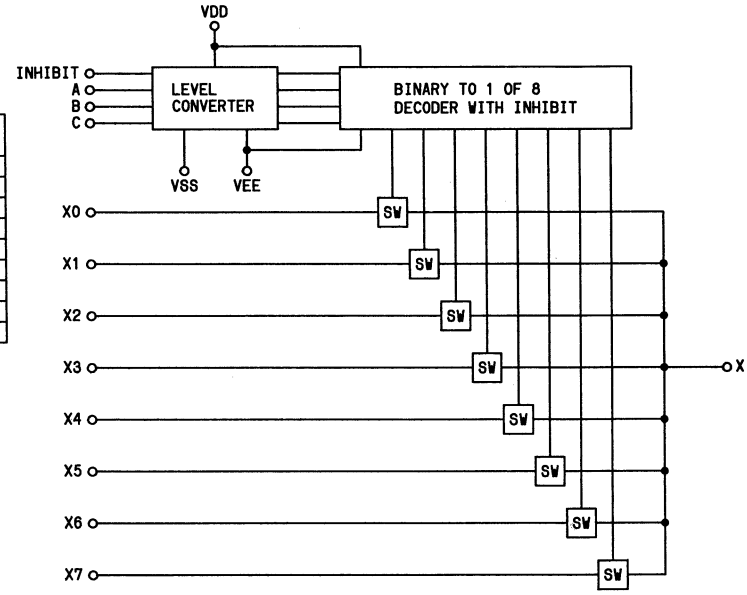

4052
(DIFFERENTIAL 4-CHANNEL MULTIPLEXER/DEMULTIPLEXER)

(TOP VIEW)

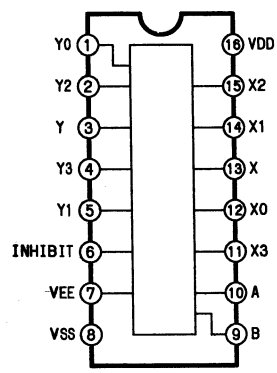

TRUTH TABLE

INPUT STATES			"ON" CHANNEL(S)
INHIBIT	B	A	
0	0	0	X0.Y0
0	0	1	X1.Y1
0	1	0	X2.Y2
0	1	1	X3.Y3
1	X	X	NONE

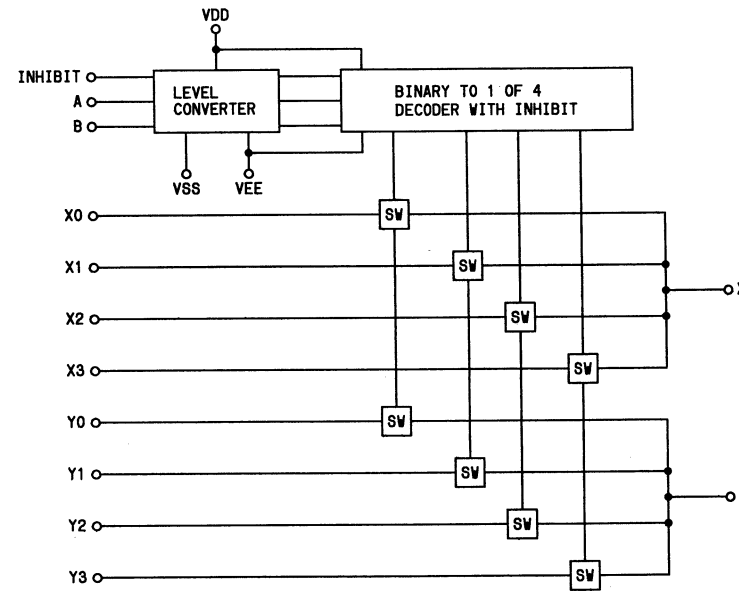

4053
(TRIPLE 2-CHANNEL MULTIPLEXER/DEMULTIPLEXER)

(TOP VIEW)

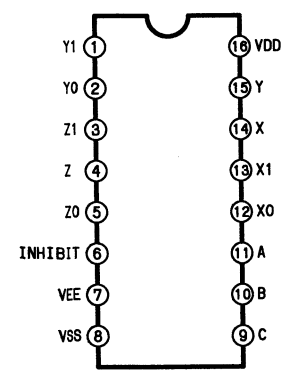

TRUTH TABLE

INPUT STATES				"ON" CHANNEL(S)
INHIBIT	C	B	A	
0	0	0	0	X0.Y0.Z0
0	0	0	1	X1.Y1.Z1
1	X	X	X	NONE

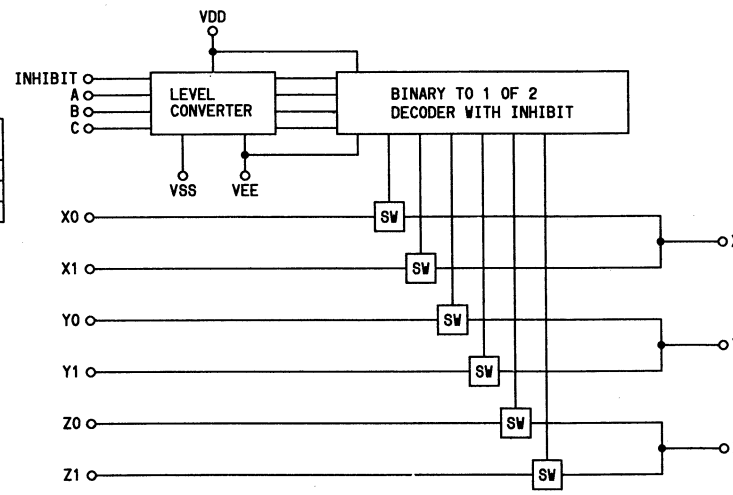

4066
(QUAD BILATERAL SWITCH)

(TOP VIEW)

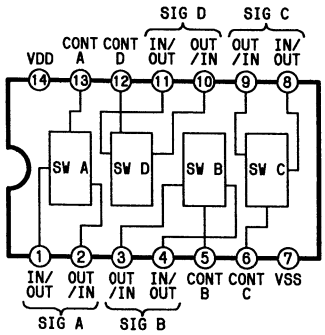

TRUTH TABLE

CONTROL	SWITCH
H	ON
L	OFF

4069
(HEX.INVERTER)

(TOP VIEW)

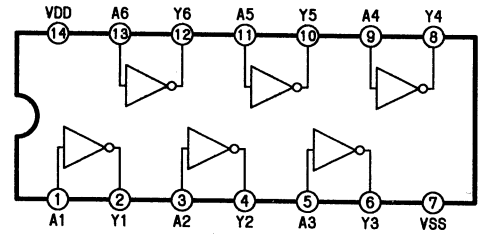

4073
(TRIPLE 3-INPUT AND GATE)

(TOP VIEW)

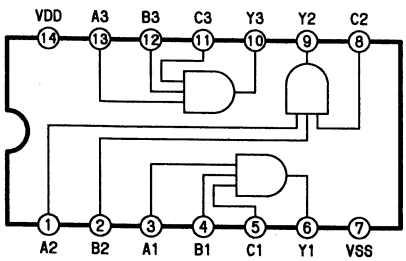

4075
(TRIPLE 3-INPUT OR GATE)

(TOP VIEW)

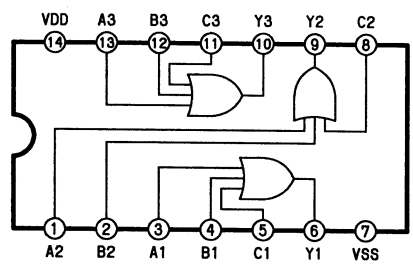

4081
(QUAD 2-INPUT AND GATE)

(TOP VIEW)

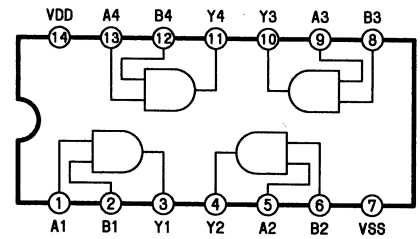

4094
(8-STAGE SHIFT/STORE BUS REGISTER)

(TOP VIEW)

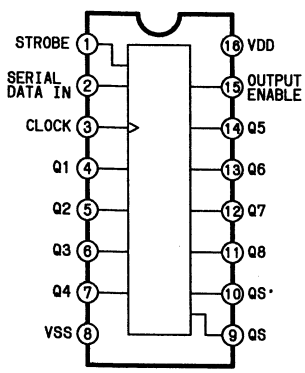

TRUTH TABLE

CL ▲	OUTPUT ENABLE	STROBE	DATA	PARALLEL OUTPUTS		SERIAL OUTPUTS	
				Q1	QN	QS	Q'S
▲	0	×	×	OC	OC	Q7	NC
▲	0	×	×	OC	OC	NC	Q7
▲	1	0	×	NC	NC	Q7	NC
▲	1	1	0	0	QN-1	Q7	NC
▲	1	1	1	1	QN-1	Q7	NC
▲	1	1	1	NC	NC	NC	Q7

▲=LEVEL CHANGE ×=DON'T CARE CASE

BLOCK DIAGRAM

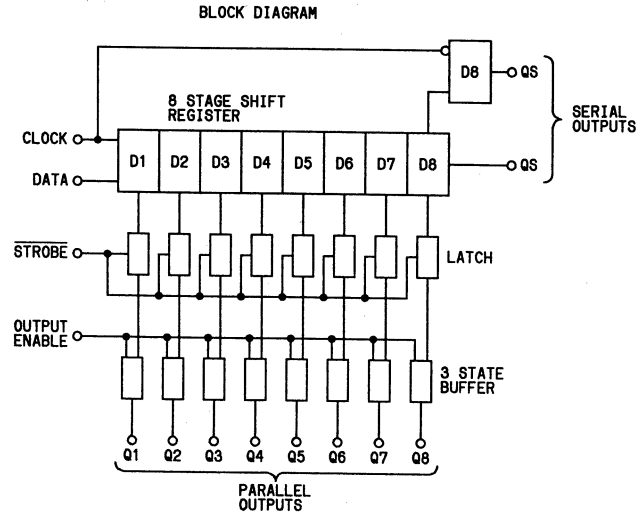

4520
(DUAL BINARY UP COUNTER)

(TOP VIEW)

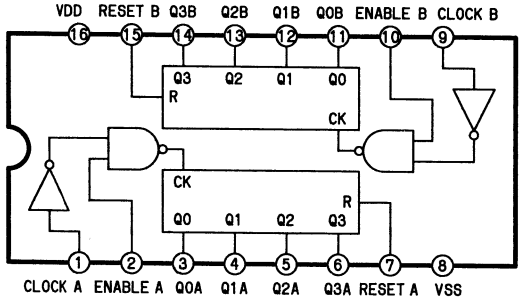

4526
(PROGRAMMABLE DIVIDE-BY-N 4-BIT COUNTER)

(TOP VIEW)

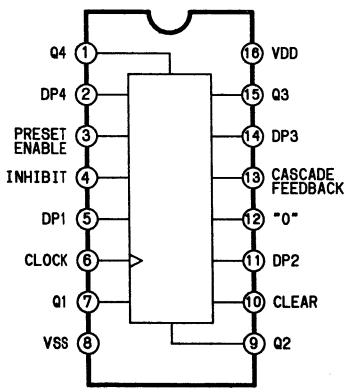

CLOCK	INHIBIT	PRESET ENABLE	MASTER RESET	ACTION
0	0	0	0	NO COUNT
↓	0	0	0	COUNT1
X	1	0	0	NO COUNT
1	↓	0	0	COUNT1
X	X	1	0	PRESET
X	X	X	1	RESET

4528
(DUAL MONOSTABLE MULTIVIBRATOR)

(TOP VIEW)

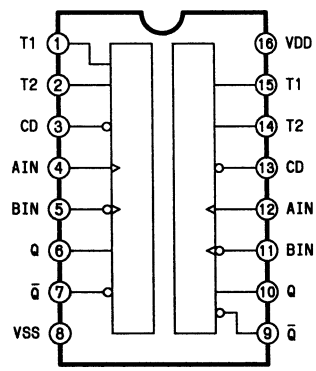

TRUTH TABLE

INPUT			OUTPUT	
A	B	CD	Q	Q̄
↑	H	H	⎍	⎎
↑	L	H	Q	Q̄
H	↓	H	Q	Q̄
L	↓	H	⎍	⎎
X	X	L	L	H

4538
(DUAL PRECISION MONOSTABLE MULTIVIBRATOR)

(TOP VIEW)

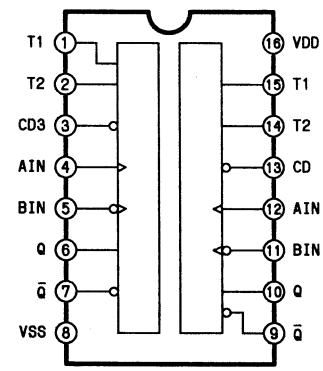

TRUTH TABLE

INPUT			OUTPUT	
A	B̄	C̄D̄	Q	Q̄
↑	H	H	⎍	⎎
↑	L	H	Q	Q̄
H	↓	H	Q	Q̄
L	↓	H	⎍	⎎
X	X	L	L	H

7400
(QUAD 2-INPUT NAND GATE)

(TOP VIEW)

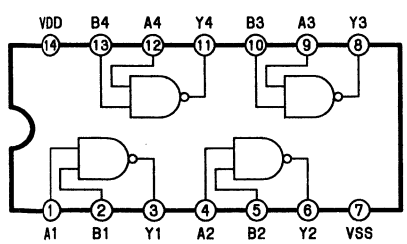

TRUTH TABLE (74HC)

INPUTS		OUTPUTS
A	B	Y
L	L	H
L	H	H
H	L	H
H	H	L

7402
(QUAD 2-INPUT NOR GATE)

(TOP VIEW)

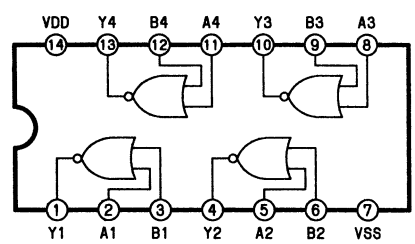

TRUTH TABLE

INPUTS		OUTPUTS
A	B	Y
L	L	H
L	H	L
H	L	L
H	H	L

7404
(HEX.INVERTER)

(TOP VIEW)

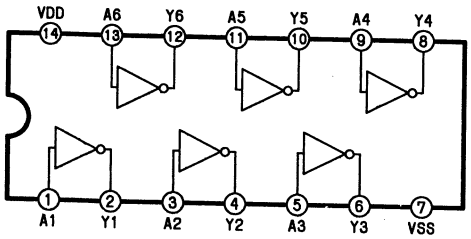

7408
(QUAD 2-INPUT AND GATE)

(TOP VIEW)

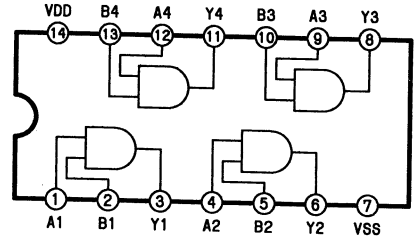

TRUTH TABLE

INPUTS		OUTPUTS
A	B	Y
L	L	L
L	H	L
H	L	L
H	H	H

7410
(TRIPLE 3-INPUT POSITIVE-NAND GATES)

(TOP VIEW)

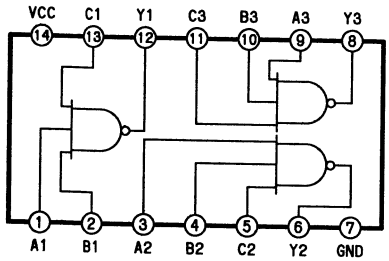

POSITIVE LOGIC:
$Y=\overline{ABC}$

74109
(DUAL J-K FLIP-FLOP WITH PRESET AND CLEAR)

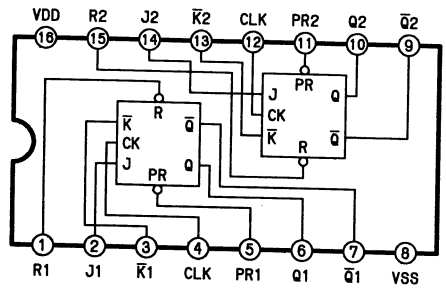

CLK:CLOCK
$\overline{PR}$:PRESET
$\overline{R}$:RESET

TRUTH TABLE (74HC109)

INPUTS					OUTPUTS	
PR	CLR	CLK	J	K̄	Q	Q̄
L	H	×	×	×	H	L
H	L	×	×	×	L	H
L	L	×	×	×	H*	H*
H	H	↑	L	L	L	H
H	H	↑	H	L	TOGGLE	
H	H	↑	L	H	Q0	Q̄0
H	H	↑	H	H	H	L
H	H	L	×	×	Q0	Q̄0

* :UNSTABLE

74112
(DUAL J-K FLIP-FLOP WITH PRESET AND CLEAR)

(TOP VIEW)

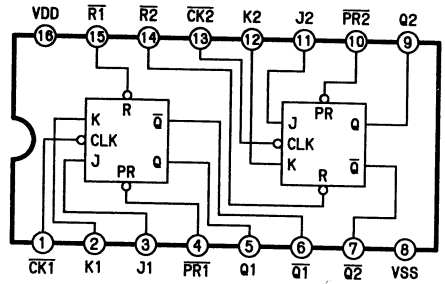

CLK:CLOCK
$\overline{PR}$:PRESET
$\overline{R}$:RESET

TRUTH TABLE (74HC112)

INPUTS					OUTPUTS	
PR	CLR	CLK	J	L	Q	Q̄
L	H	×	×	×	H	L
H	L	×	×	×	L	H
L	L	×	×	×	L*	L*
H	H	↓	L	L	Q0	Q̄0
H	H	↓	H	L	H	L
H	H	↓	L	H	L	H
H	H	↓	H	H	TOGGLE	
H	H	H	×	×	Q0	Q̄0

* :UNSTABLE

7411
(TRIPLE 3-INPUT AND GATE)

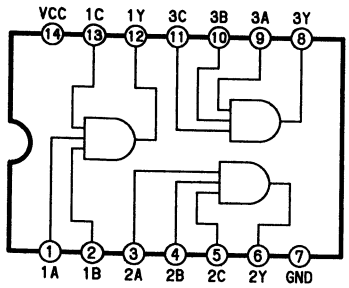

Y=A.B.C

74125
(3 STATE QUAD BUFFER)

(TOP VIEW)

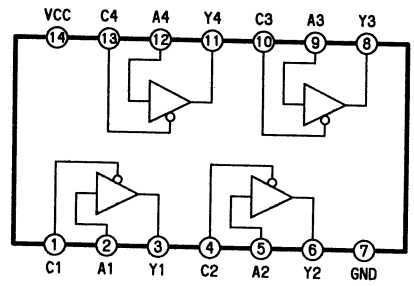

TRUTH TABLE

INPUTS		OUTPUT
A	C	Y
H	L	H
L	L	L
X	H	Z

74123
(DUAL RETRIGGERABLE MONOSTABLE MULTIVIBRATOR)

(TOP VIEW)

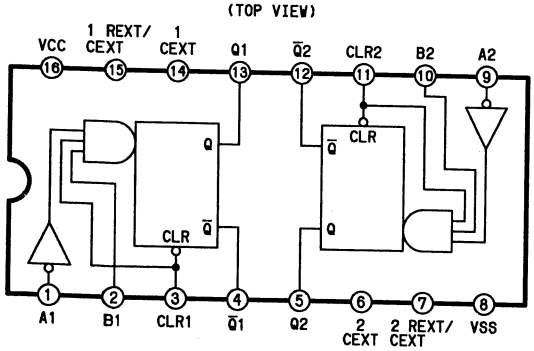

TRUTH TABLE

INPUTS			OUTPUTS	
CLEAR	A	B	Q	Q̄
L	×	×	L	H
×	H	×	L	H
×	×	L	L	H
H	L	↑	⎍	⎎
H	↓	H	⎍	⎎
↑	L	H	⎍	⎎

74137
74237
(3-8 LINE DECODERS)

(TOP VIEW)

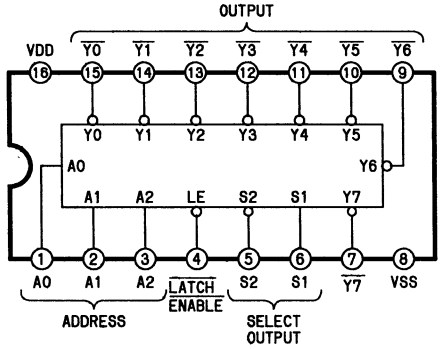

TRUTH TABLE

INPUT						OUTPUT							
LATCH ENABLE	SELECT S1	SELECT S2	ADDRESS A2	ADDRESS A1	ADDRESS A0	Y0	Y1	Y2	Y3	Y4	Y5	Y6	Y7
X	X	H	X	X	X	H	H	H	H	H	H	H	H
X	L	X	X	X	X	H	H	H	H	H	H	H	H
L	H	L	L	L	L	L	H	H	H	H	H	H	H
L	H	L	L	L	H	H	L	H	H	H	H	H	H
L	H	L	L	H	L	H	H	L	H	H	H	H	H
L	H	L	L	H	H	H	H	H	L	H	H	H	H
L	H	L	H	L	L	H	H	H	H	L	H	H	H
L	H	L	H	L	H	H	H	H	H	H	L	H	H
L	H	L	H	H	L	H	H	H	H	H	H	L	H
L	H	L	H	H	H	H	H	H	H	H	H	H	L
H	H	L	X	X	X	*HOLD THE OUTPUT							

← SELECTED TO LOW

H:HIGH L:LOW X:H or L

*DEW TO ADDRESS CONDITION OF LATCH ENABLE

74138
(3-TO-8 LINE DECODER)

(TOP VIEW)

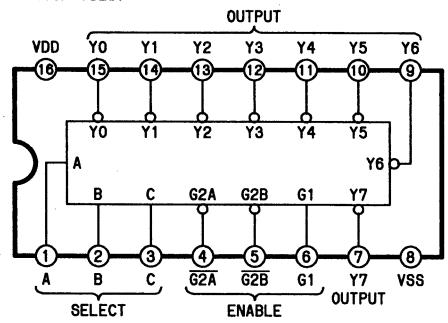

TRUTH TABLE (74HC138)

INPUTS					OUTPUTS							
ENABLE		SELECT										
G1	G2*	C	B	A	Y0	Y1	Y2	Y3	Y4	Y5	Y6	Y7
X	H	X	X	X	H	H	H	H	H	H	H	H
L	X	X	X	X	H	H	H	H	H	H	H	H
H	L	L	L	L	L	H	H	H	H	H	H	H
H	L	L	L	H	H	L	H	H	H	H	H	H
H	L	L	H	L	H	H	L	H	H	H	H	H
H	L	L	H	H	H	H	H	L	H	H	H	H
H	L	H	L	L	H	H	H	H	L	H	H	H
H	L	H	L	H	H	H	H	H	H	L	H	H
H	L	H	H	L	H	H	H	H	H	H	L	H
H	L	H	H	H	H	H	H	H	H	H	H	L

* $\overline{G2}=\overline{G2A}+\overline{G2B}$

7414
(HEX.INVERTING SCHMITT TRIGGER)

(TOP VIEW)

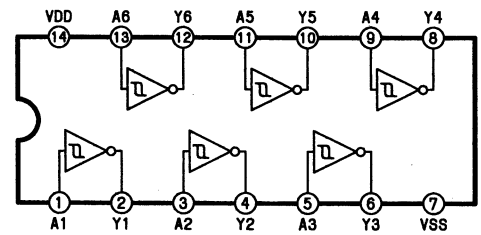

74148
(8-TO-3 LINE PRIORITY ENCODER)

(TOP VIEW)

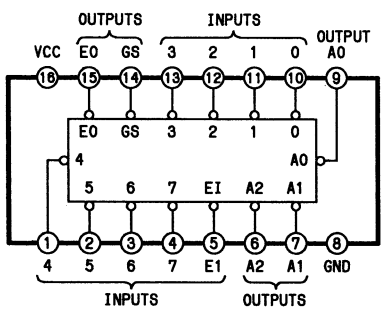

74139
(DUAL 2-TO-4 LINE DECODER)

(TOP VIEW)

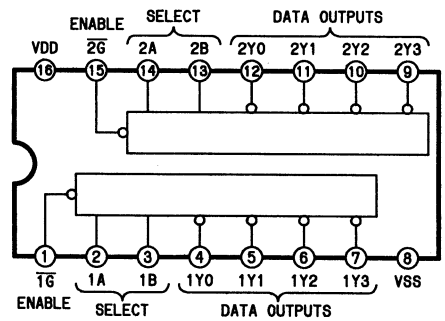

TRUTH TABLE

INPUTS			OUTPUTS			
ENABLE	SELECT					
G	B	A	Y0	Y1	Y2	Y3
H	X	X	H	H	H	H
L	L	L	L	H	H	H
L	L	H	H	L	H	H
L	H	L	H	H	L	H
L	H	H	H	H	H	L

74151
(8-CHANNEL DIGITAL MULTIPLEXER)

(TOP VIEW)

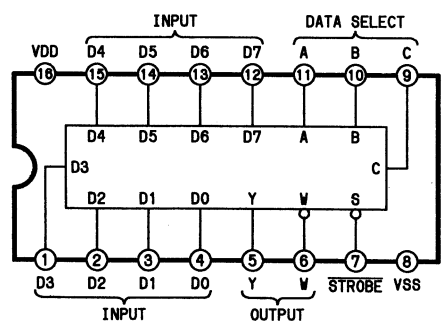

TRUTH TABLE

INPUTS									OUTPUTS				
E1	0	1	2	3	4	5	6	7	A2	A1	A0	GS	EO
H	X	X	X	X	X	X	X	X	H	H	H	H	H
L	H	H	H	H	H	H	H	H	H	H	H	H	L
L	X	X	X	X	X	X	X	L	L	L	L	L	H
L	X	X	X	X	X	X	L	H	L	L	H	L	H
L	X	X	X	X	X	L	H	H	L	H	L	L	H
L	X	X	X	X	L	H	H	H	L	H	H	L	H
L	X	X	X	L	H	H	H	H	H	L	L	L	H
L	X	X	L	H	H	H	H	H	H	L	H	L	H
L	X	L	H	H	H	H	H	H	H	H	L	L	H
L	L	H	H	H	H	H	H	H	H	H	H	L	H

TRUTH TABLE

INPUTS				OUTPUTS	
SELECT			STROBE		
C	B	A	S	Y	W
X	X	X	H	L	H
L	L	L	L	D0	$\overline{D0}$
L	L	H	L	D1	$\overline{D1}$
L	H	L	L	D2	$\overline{D2}$
L	H	H	L	D3	$\overline{D3}$
H	L	L	L	D4	$\overline{D4}$
H	L	H	L	D5	$\overline{D5}$
H	H	L	L	D6	$\overline{D6}$
H	H	H	L	D7	$\overline{D7}$

74153
(DUAL 4 TO 1 DATA SELECTORS)

(TOP VIEW)

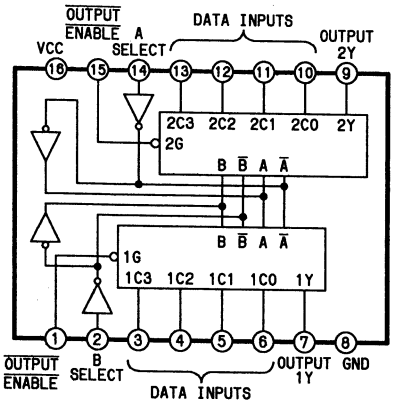

TRUTH TABLE

INPUT			OUTPUT
SELECT		OUTPUT ENABLE	Y
B	A		
X	X	H	L
L	L	L	C0
L	H	L	C1
H	L	L	C2
H	H	L	C3

H:HIGH L:LOW X:H or L

74157.74158
(QUAD 2-INPUT MULTIPLEXER)

(TOP VIEW)

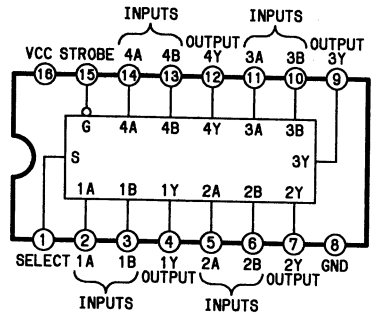

TRUTH TABLE (74HC157)

INPUTS				OUTPUT Y	
STROBE	SELECT	A	B	HC157	HC158
H	X	X	X	L	H
L	L	L	X	L	H
L	L	H	X	H	L
L	H	X	L	L	H
L	H	X	H	H	L

74161
(4-BIT SYNCHRONOUS BINARY COUNTER)

(TOP VIEW)

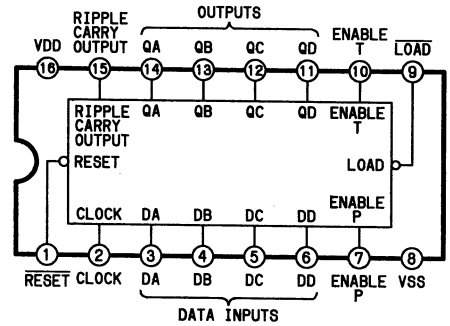

TRUTH TABLE (74HC160/74HC161)

INPUT					OUTPUT
CLOCK	$\overline{RESET}$	$\overline{LOAD}$	ENABLE P	ENABLE T	Qn
X	L	X	X	X	L
↑	H	L	X	X	LOAD
↑	H	H	H	H	COUNT
X	H	H	L	X	NO COUNT
X	H	H	X	L	NO COUNT

H:HIGH L:LOW X:H or L
n:A~D

74163
(4-BIT SYNCHRONOUS BINARY COUNTER WITH SYNCHRONOUS CLEAR)

(TOP VIEW)

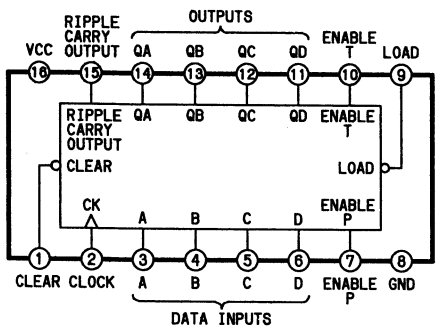

TRUTH TABLE

CLK	CLR	ENP	ENT	LOAD	FUNCTION
↑	L	X	X	X	CLEAR
X	H	H	L	H	COUNT & RC DISABLED
X	H	L	H	H	COUNT DISABLED
X	H	L	L	H	COUNT & RC DISABLED
↑	H	X	X	L	LOAD
↑	H	H	H	H	INCREMENT COUNTER

74164
(8-BIT SERIAL-IN/PARALLEL-OUT SHIFT REGISTER)

(TOP VIEW)

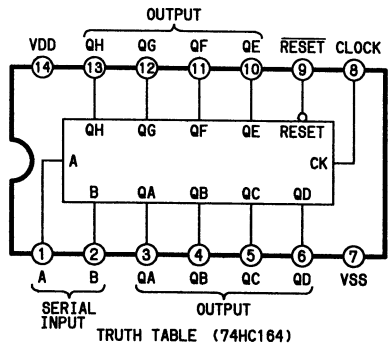

TRUTH TABLE (74HC164)

INPUT				OUTPUT		
$\overline{RESET}$	CLOCK	A	B	QA	QB	QH
L	X	X	X	L	L	L
H	↓	X	X	NO CHANGE		
H	↑	L	X	L	QA	QG
H	↑	X	L	L	QA	QG
H	↑	H	H	H	QA	QG

H:HIGH L:LOW X:H or L

FUNCTION TABLE (74161)

INPUT					OUTPUT		
CLEAR	LOAD	CK	ENABLE P	ENABLE T	QA QB QC QD	RIPPLE CARRY	FUNCTION
H	H	↑	H	H		—	COUNT
H	L	↑	X	X	DA DB DC DD	—	DATA SET
↓	X	X	X	X	L L L L	—	CLEAR
H	X	X	X	H	H H H H	H	—

74165
(PARALLEL-LOAD 8-BIT SHIFT REGISTERS)

(TOP VIEW)

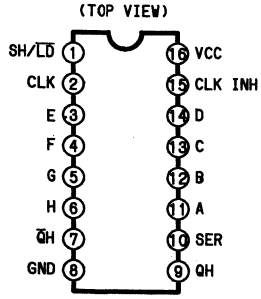

TRUTH TABLE

INPUT			FUNCTION
SH/$\overline{LD}$	CLK	CLK INH	
L	X	X	PARALLEL INPUT
H	H	X	NO CHANGE
H	X	H	
H	L	↑	SHIFT
H	↑	L	

FUNCTION TABLE

INPUT			FUNCTION
SHIFT/LOAD	CK	CK INHIBIT	
H	↑	L	RIGHT SHIFT
↓	X	X	DATA SET
H	X	H	HOLD

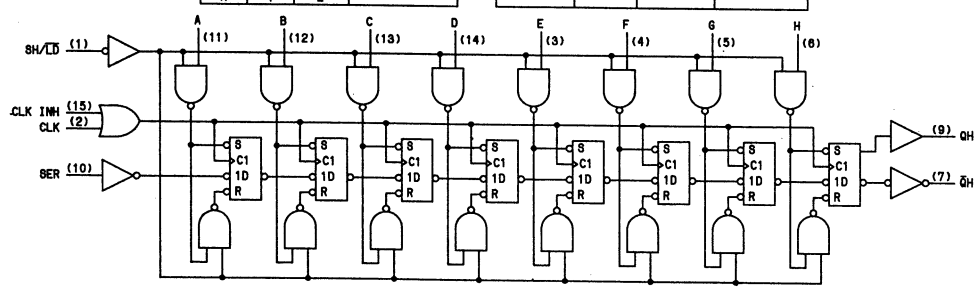

74166
(8-BIT SHIFT REGISTER)

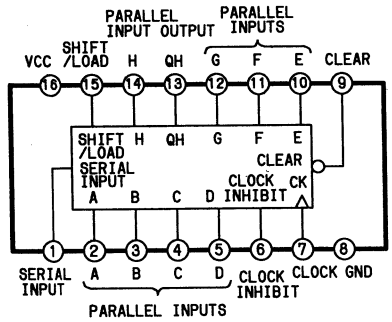

TRUTH TABLE

INPUT				FUNCTION
CLEAR	SHIFT/LOAD	CK	CK INHIBIT	
H	H	↑	L	RIGHT SHIFT
H	L	↑	L	LOAD
H	H	X	H	HOLD
↓	X	X	X	CLEAR

74175
(QUAD D-TYPE FLIP-FLOP WITH CLEAR)

(TOP VIEW)

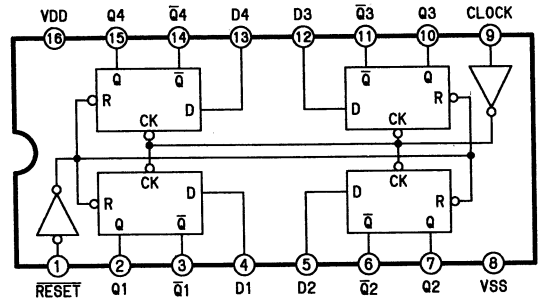

TRUTH TABLE (74HC175)

INPUT			OUTPUT	
CLOCK	$\overline{RESET}$	D	Q	$\overline{Q}$
×	L	×	L	H
↑	H	H	H	L
↑	H	L	L	H
L	H	×	NO CHANGE	

H:HIGH L:LOW X:H or L

74193
(4-BIT SYNCHRONOUS BINARY UP/DOWN COUNTER)

(TOP VIEW)

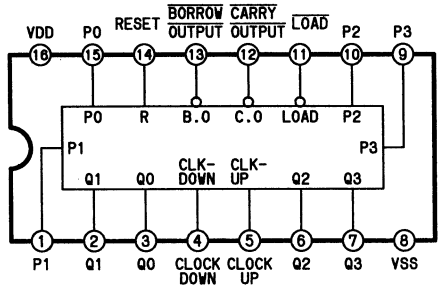

P0～P3 PRESET INPUT
Q0～Q3 BINARY OUTPUT

TRUTH TABLE

COUNT		CLEAR	LOAD	FUNCTION
UP	DOWN			
↑	H	L	H	COUNT UP
H	↑	L	H	COUNT DOWN
×	×	H	×	CLEAR
×	×	L	L	LOAD

74221
(DUAL NON-RETRIGGERABLE MONOSTABLE MULTIVIBRATOR)

(TOP VIEW)

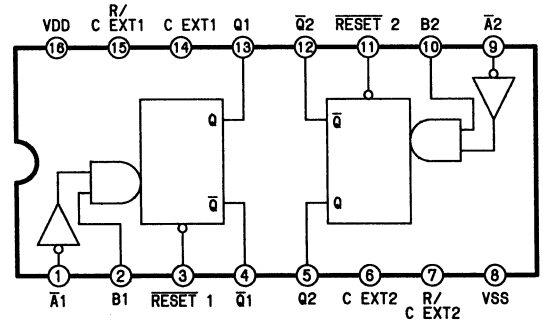

(74HC221)

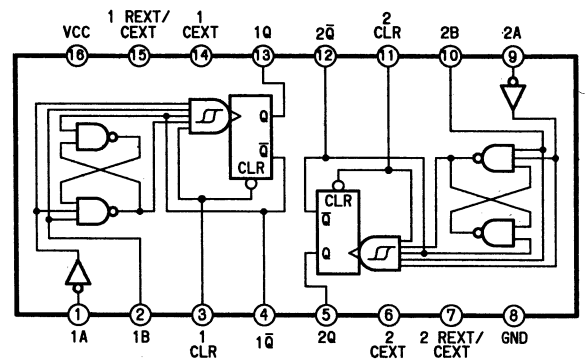

(74221)

TRUTH TABLE (74HC221)

INPUTS			OUTPUTS	
CLEAR	A	B	Q	$\overline{Q}$
L	×	×	L	H
×	H	×	L	H
×	×	L	L	H
H	L	↑	⎍	⎎
H	↓	H	⎍	⎎
↑	L	H	⎍	⎎

74240
(INVERTING OCTAL 3-STATE BUFFER)

(TOP VIEW)

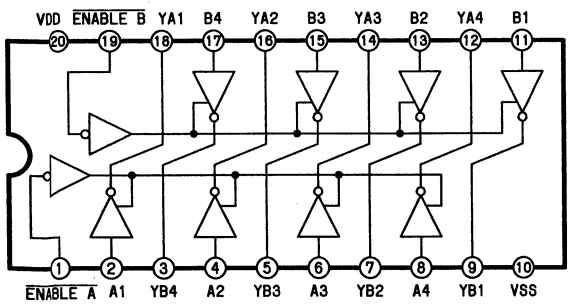

TRUTH TABLE (74HC240)

$1\overline{G}$	1A	1Y	$2\overline{G}$	2A	2Y
L	L	H	L	L	H
L	H	L	L	H	L
H	L	Z	H	L	Z
H	H	Z	H	H	Z

7420
(DUAL 4-INPUT NAND GATE)

(TOP VIEW)

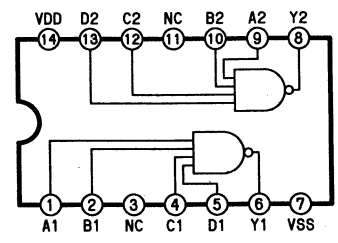

74241
(INVERTING OCTAL 3-STATE BUFFER)

(TOP VIEW)

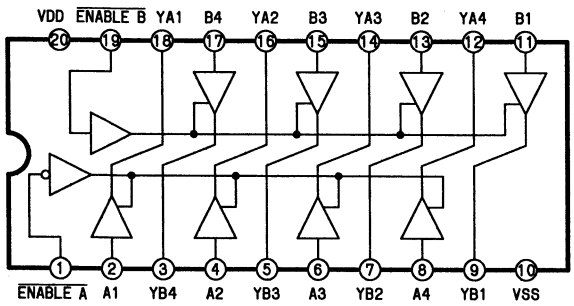

TRUTH TABLE (74HC241)

$1\overline{G}$	1A	1Y	$2\overline{G}$	2A	2Y
L	L	L	H	L	L
L	H	H	H	H	H
H	L	Z	L	L	Z
H	H	Z	L	H	Z

74244
(OCTAL 3-STATE BUFFER)

(TOP VIEW)

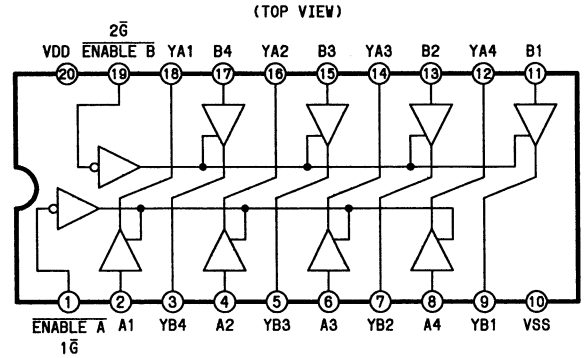

TRUTH TABLE (74HC244)

$1\overline{G}$	1A	1Y	$2\overline{G}$	2A	2Y
L	L	L	L	L	L
L	H	H	L	H	H
H	L	Z	H	L	Z
H	H	Z	H	H	Z

74245
(OCTAL 3-STATE BUS TRANSCEIVERS)

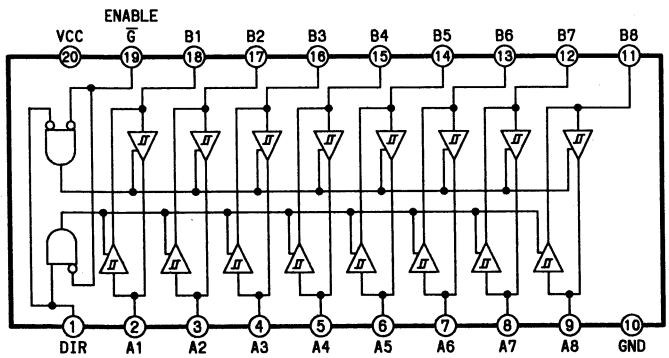

7427
(TRIPLE 3-INPUT NOR GATE)

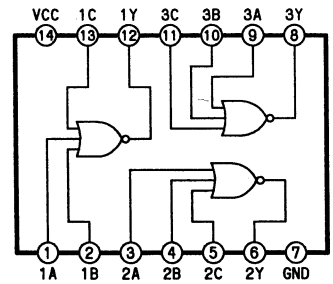

74257
(QUAD 2-CHANNEL 3-STATE MULTIPLEXER)

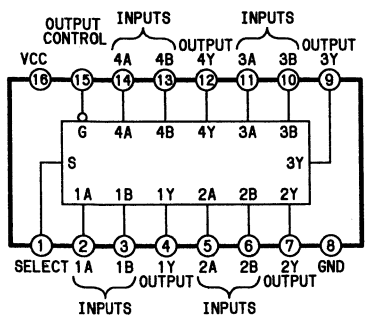

FUNCTION TABLE (74257)

INPUTS		OUTPUT
SELECT	OUTPUT CONTROL	Y
X	H	Z
L	L	A
H	L	B

TRUTH TABLE (74HC257)

INPUTS				OUTPUT
OUTPUT CONTROL	SELECT	A	B	Y
H	×	×	×	Z
L	L	L	×	L
L	L	H	×	H
L	H	×	L	L
L	H	×	H	H

74283
(4-BIT BINARY ADDER WITH FAST CARRY)

(TOP VIEW)

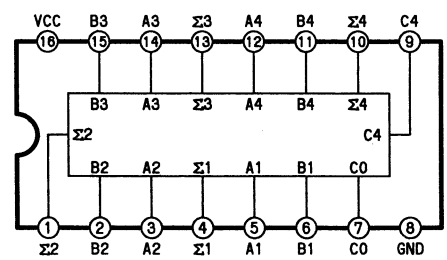

74273
(OCTAL D-TYPE FLIP-FLOP WITH CLEAR)

(TOP VIEW)

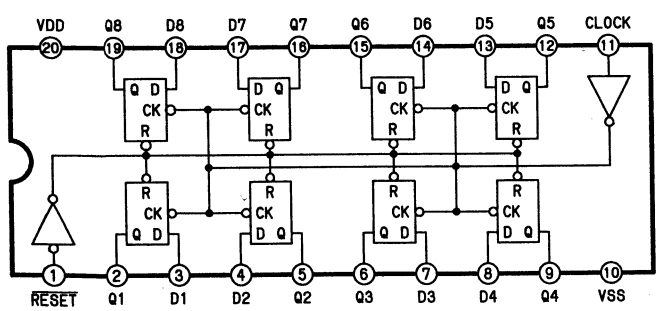

TRUTH TABLE (74HC273)

INPUTS			OUTPUTS
CLEAR	CLOCK	D	Q
L	×	×	L
H	↑	H	H
H	↑	L	L
H	L	×	Q0

7432
(QUAD 2-INPUT OR GATE)

(TOP VIEW)

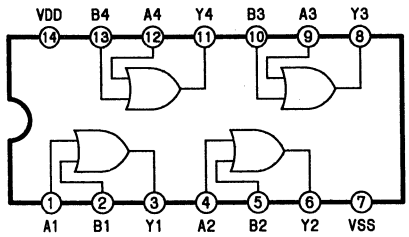

74365
(HEX.3-STATE BUFFER)

(TOP VIEW)

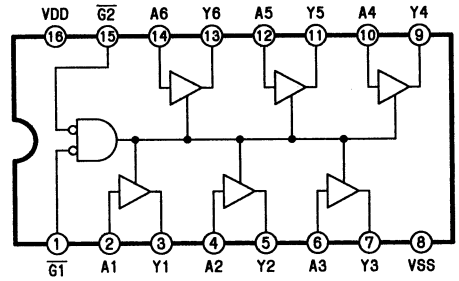

TRUTH TABLE (74HC365)

INPUTS			OUTPUT
$\overline{G1}$	$\overline{G2}$	A	Y
H	×	×	Z
×	H	×	Z
L	L	H	H
L	L	L	L

74374
(3-STATE OCTAL D-TYPE FLIP-FLOP)

(TOP VIEW)

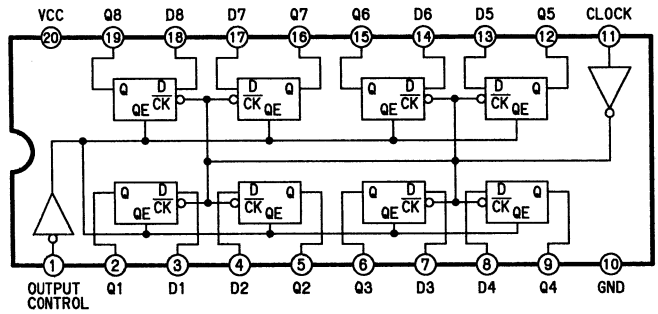

TRUTH TABLE (74HC374)

OUTPUT CONTROL	CLOCK	DATA	OUTPUT
L	↑	H	H
L	↑	L	L
L	L	×	Q0
H	×	×	Z

FUNCTION TABLE (74374)

INPUT		FUNCTION
OUTPUT CTL	CK	
×	↓	DATA SET
H	×	HIGH IMPE OUT

74393
(DUAL 4-BIT BINARY COUNTER)

(TOP VIEW)

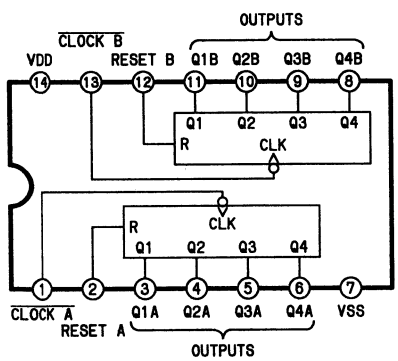

TRUTH TABLE (74HC393)

INPUTS		FUNCTION
CLOCK	CLEAR	
↓	L	INCREMENT
×	H	CLEAR

74398
(4-BIT 2 INPUT MULTIPLEX REGISTER)

(TOP VIEW)

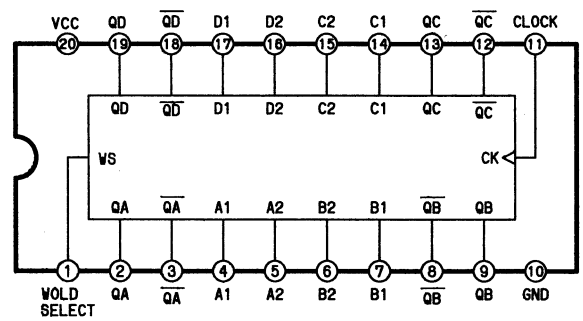

TRUTH TABLE

INPUT		OUTPUT			
WOLD SELECT	CK	QA	QB	QC	QD
L	↓	DA1	DB1	DC1	DD1
H	↓	DA2	DB2	DC2	DD2

74399
(4-BIT 2 INPUT MALTIPLEX REGISTER)

(TOP VIEW)

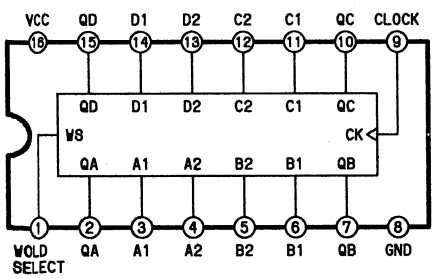

TRUTH TABLE

INPUT		OUTPUT			
WOLD SELECT	CK	QA	QB	QC	QD
L	↓	DA1	DB1	DC1	DD1
H	↓	DA2	DB2	DC2	DD2

74540
(INVERTING OCTAL 3-STATE BUFFER)

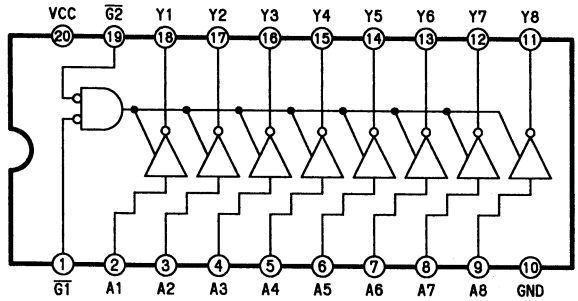

TRUTH TABLE

INPUT		OUTPUT
E1	E2	
L	L	D
H	×	HIGH Z
×	H	

74541
(OCTAL 3-STATE BUFFER)

(TOP VIEW)

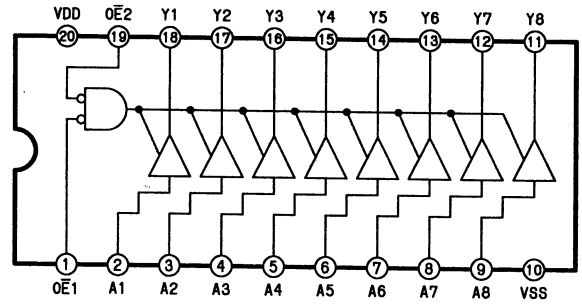

$O\overline{E}1$.$O\overline{E}2$:$\overline{OUTPUT\ ENABLE}$

TRUTH TABLE

INPUT			OUTPUT
$O\overline{E}1$	$O\overline{E}2$	A	Y
L	L	L	L
L	L	H	H
H	×	×	Z
×	H	×	Z

X:H or L Z:HIGH IMPEDANCE

74574
(OCTAL D-TYPE FLIP-FLOP)

(TOP VIEW)

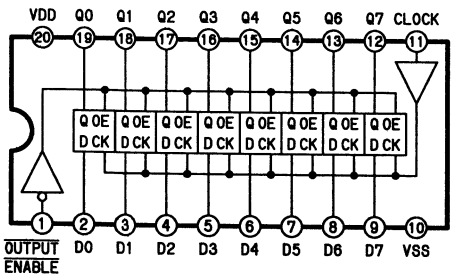

TRUTH TABLE (74HC574)

INPUT			OUTPUT
$\overline{OUTPUT\ ENABLE}$	CLOCK	DATA D	Q
L	↑	H	H
L	↑	L	L
L	↓	×	NO CHANGE
H	×	×	Z

X:H or L Z:HIGH IMPEDANCE

74576
(OCTAL D-TYPE EDGE-TRIGGERED FLIP-FLOPS WITH INVERTED OUTPUTS)

(TOP VIEW)

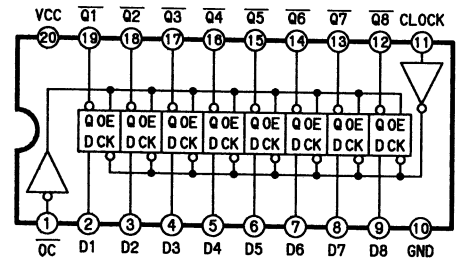

74628
(VCO)

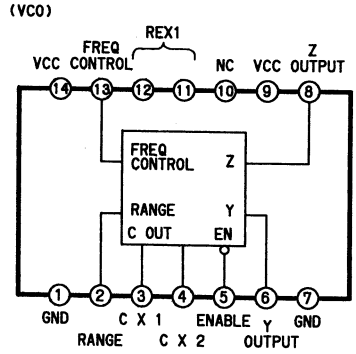

74595
(8-BIT SHIFT REGISTER WITH OUTPUT LATCH)

(TOP VIEW)

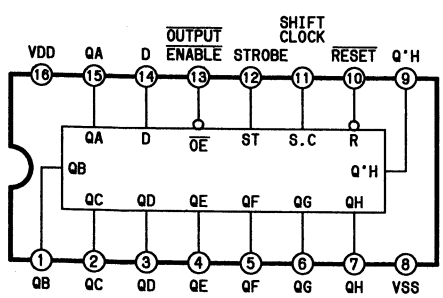

QA～QH:PARALLEL OUTPUTS
Q'H :SERIAL OUTPUT

TRUTH TABLE (74HC595)

RCK	SCK	$\overline{SCLR}$	$\overline{G}$	FUNCTION
×	×	×	1	QA THRU QH-TRI-STATE
×	×	L	×	SHIFT REGISTER CLEARED QH'=0
×	↑	H	×	SHIFT REGISTER CLOCKED QN=Qn-1,Q0=SER
↑	×	H	×	CONTENTS OF SHIFT REGISTER TRANSFERRED TO OUTPUT LATCHES

74682
74684
(8-BIT MAGNITUDE COMPARATORS)

(TOP VIEW)

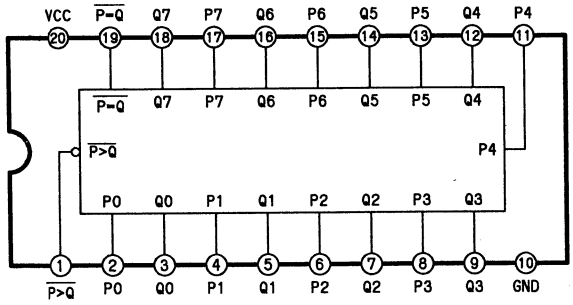

AD9300 (SELECT SWITCH)

(TOP VIEW)

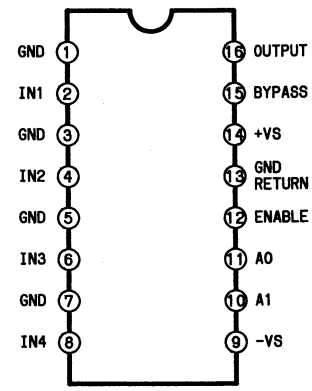

7474
(DUAL D-TYPE FLIP-FLOP)

(TOP VIEW)

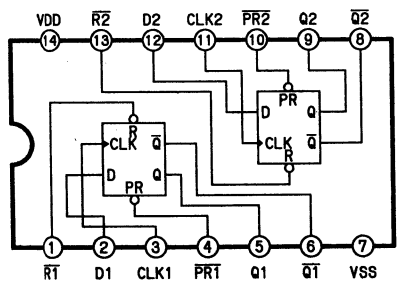

CLK:CLOCK

$\overline{PR}$:$\overline{PRESET}$

$\overline{R}$:$\overline{RESET}$

D:DATA

TRUTH TABLE (74HC74)

INPUTS				OUTPUTS	
PR	CLR	CLK	D	Q	$\overline{Q}$
L	H	×	×	H	L
H	L	×	×	L	H
L	L	×	×	H*	H*
H	H	↑	H	H	L
H	H	↑	L	L	H
H	H	L	×	Q0	$\overline{Q0}$

*:UNSTABLE

AD96685 (COMPARATOR)

(TOP VIEW)

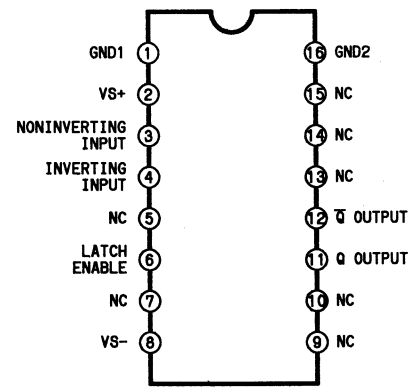

7486
(QUAD EXCLUSIVE OR GATE)

(TOP VIEW)

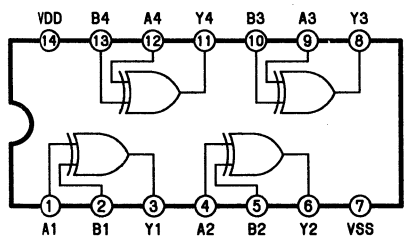

$Y=A\oplus B=\overline{A}B+A\overline{B}$

TRUTH TABLE

INPUTS		OUTPUTS
A	B	Y
L	L	L
L	H	H
H	L	H
H	H	L

AD7535
(TIMING CHARACTERISTICS)

(TOP VIEW)

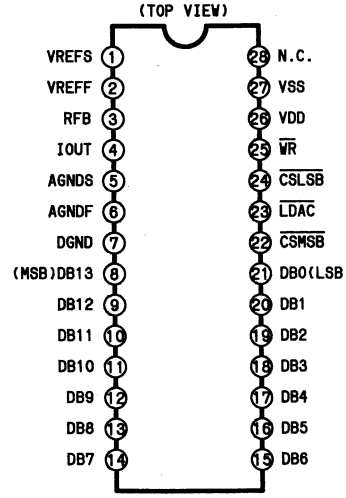

7492
(DIVIDE BY TWELVE COUNTER)

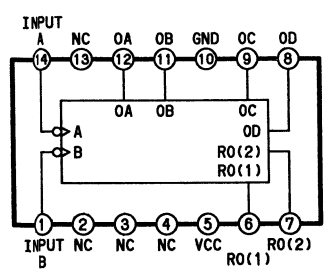

FUNCTION TABLE

INPUT				OUTPUT				FUNCTION
RO	CK			QA	QB	QC	QD	
	A	B	PULS					
L	↓	↓	0	L	L	L	L	COUNT
			1	H	H	L	L	
			2	L	L	H	L	
			3		L	L	H	
			4		H	L	H	
			5		L	H	H	
			6		L	L	L	
H	×	×	—	L	L	L	L	CLEAR

RO=RO(1).RO(2)

AK5326
(HIGH PERFORMANCE STEREO A/D CONVERTER)

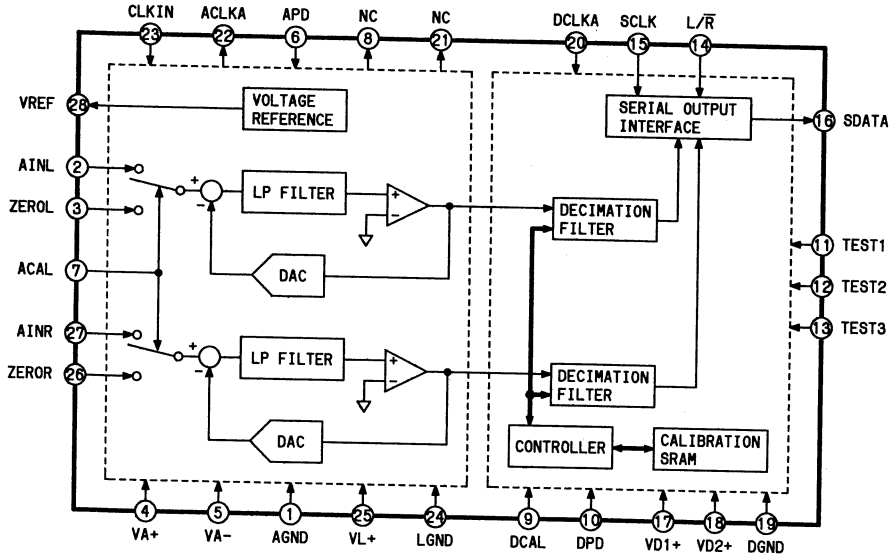

AM26LS31PC
(QUAD DIFF LINE(RS422)DRIVER)

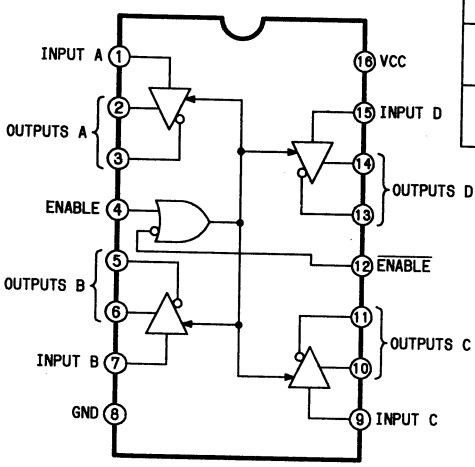

TRUTH TABLE			
IN	CONTROL (E/$\overline{E}$)	NON-INVERTING OUTPUT	INVERTING OUTPUT
H	H/L	H	L
L	H/L	L	H
X	L/H	Z	Z

AM26LS32PC
(QUAD DIFF LINE(RS422/423)RECEIVER)

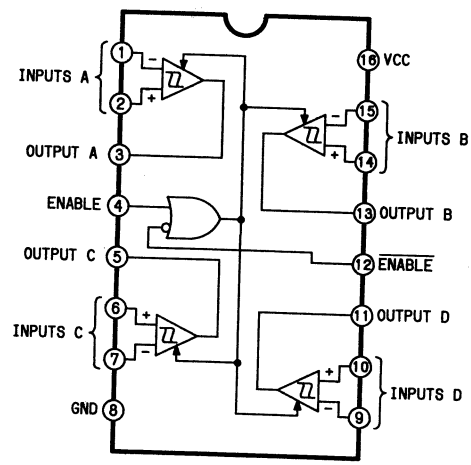

AM27C128
(16,384×8-BIT CMOS EPROM)

BLOCK DIAGRAM

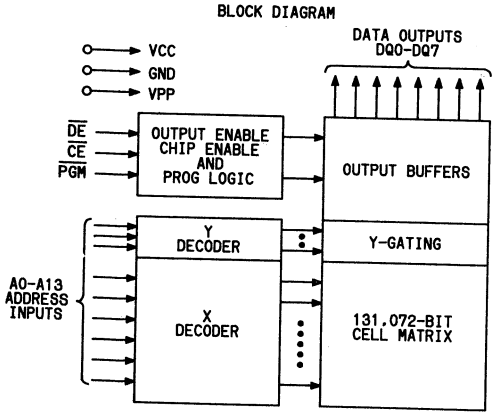

DIP

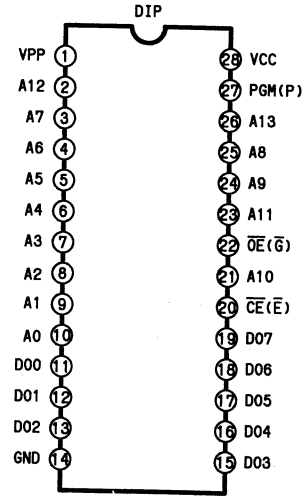

LCC

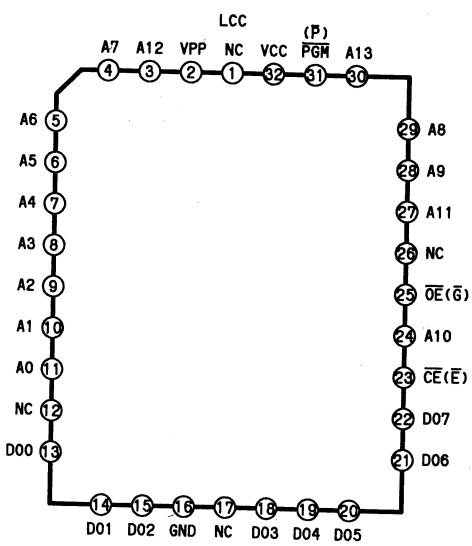

AM27C256
(32.768×8-BIT CMOS EPROM)

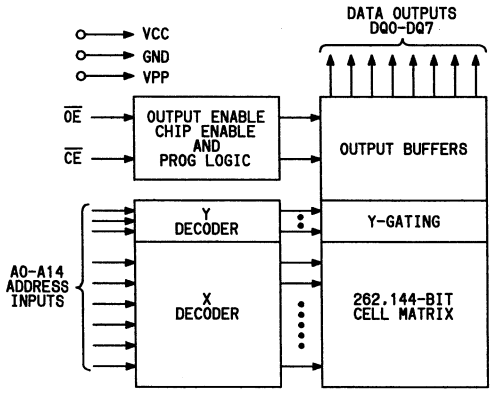

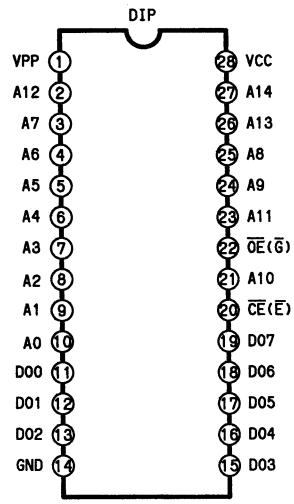

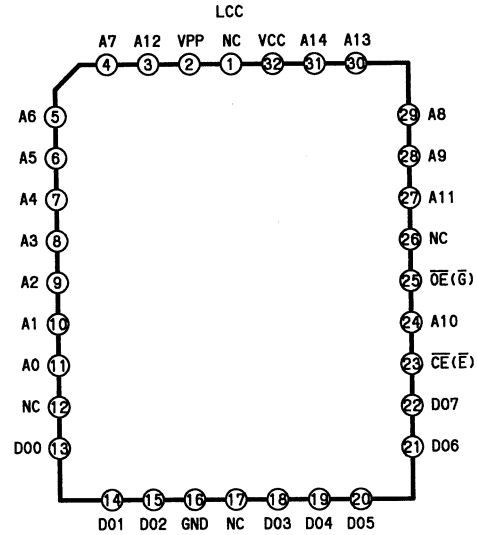

AN78L00
(3-TERMINAL POSITIVE OUTPUT VOLTAGE REGULATOR)

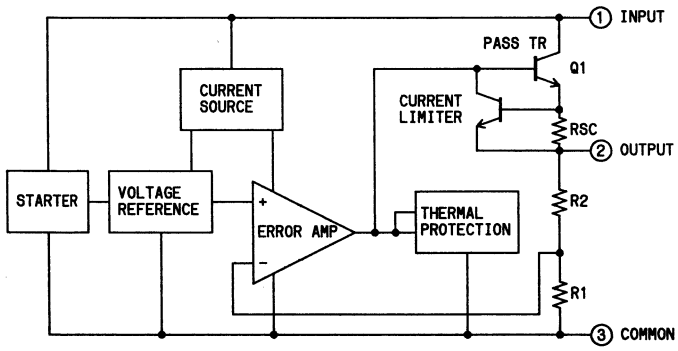

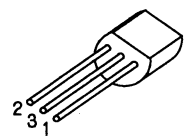

AN78N00
(3-TERMINAL POSITIVE OUTPUT VOLTAGE REGULATOR)

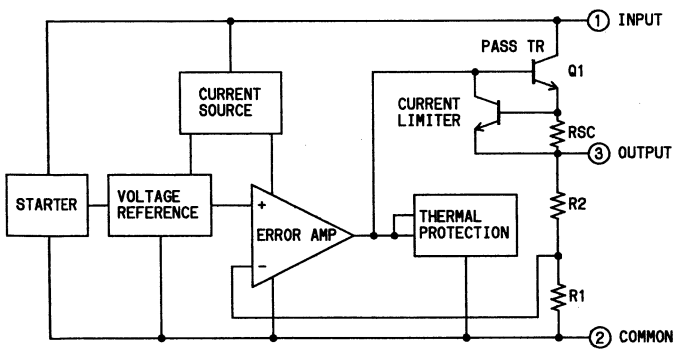

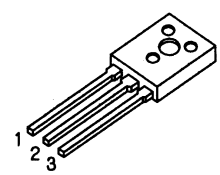

AN79L00
(3-TERMINAL NEGATIVE OUTPUT VOLTAGE REGULATOR)

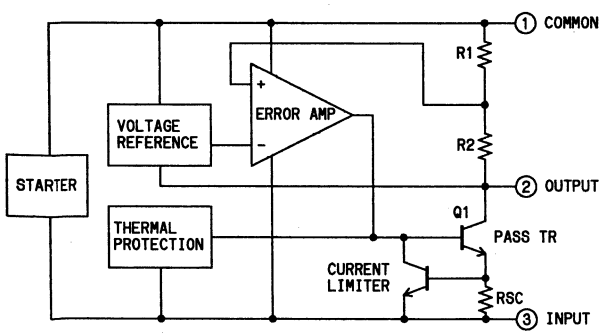

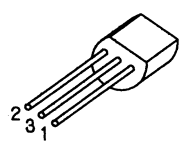

AN7805

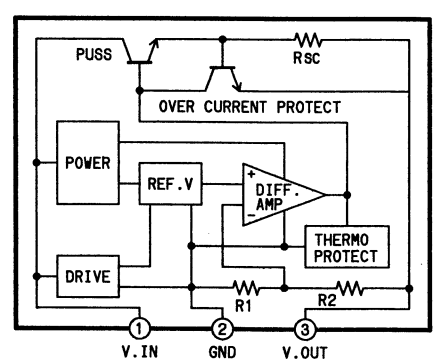

AN79N00
(3-TERMINAL NEGATIVE OUTPUT VOLTAGE REGULATOR)

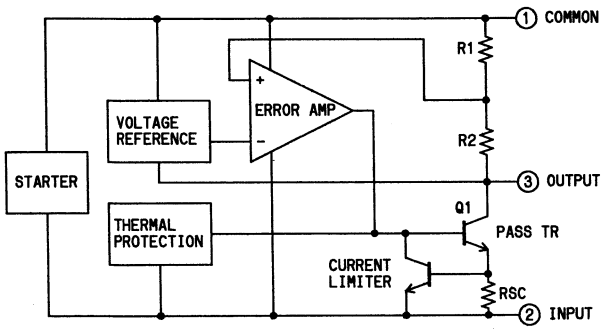

BA6110
(VOLTAGE CONTROL AMP)

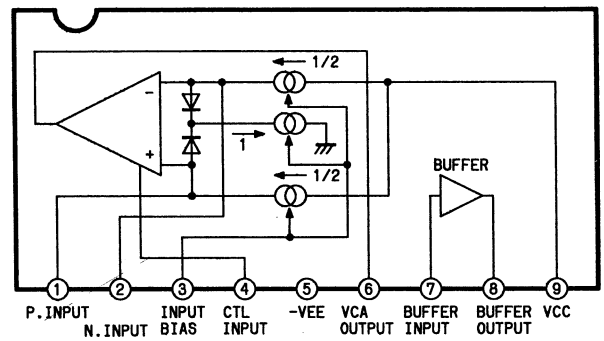

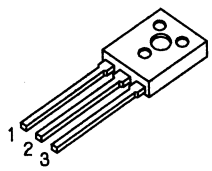

BA6238
(LOADING REGULATOR)

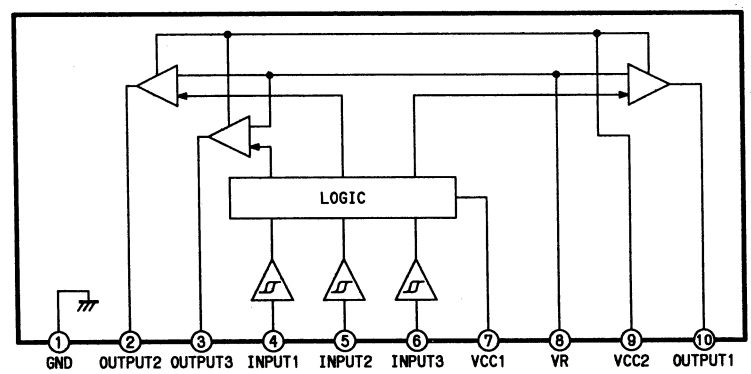

CY261-45WC
(TOP VIEW)

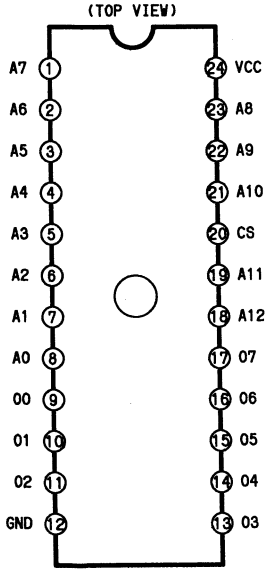

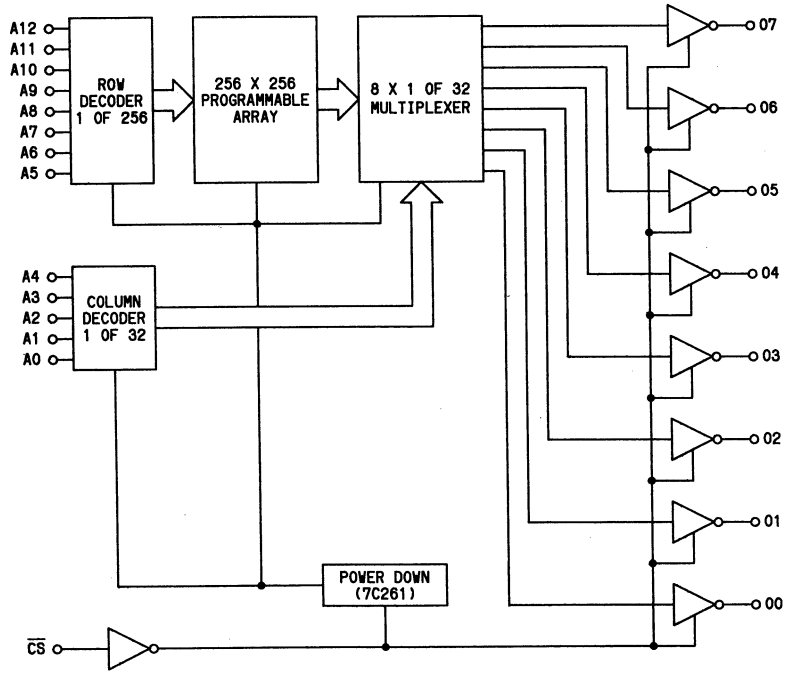

DAC10-GX (10-BIT D/A CONVERTER)
(18PIN HERMETIC DIP)

(TOP VIEW)

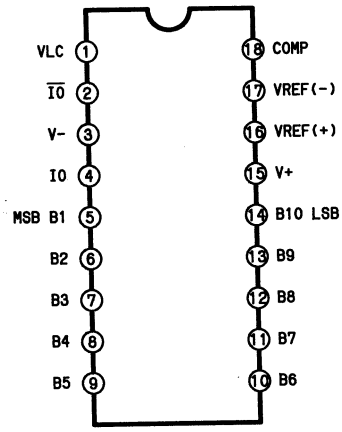

DS9637A
(DUAL DIFFERENTIAL LINE RECEIVER)

(TOP VIEW)

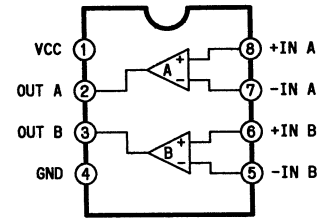

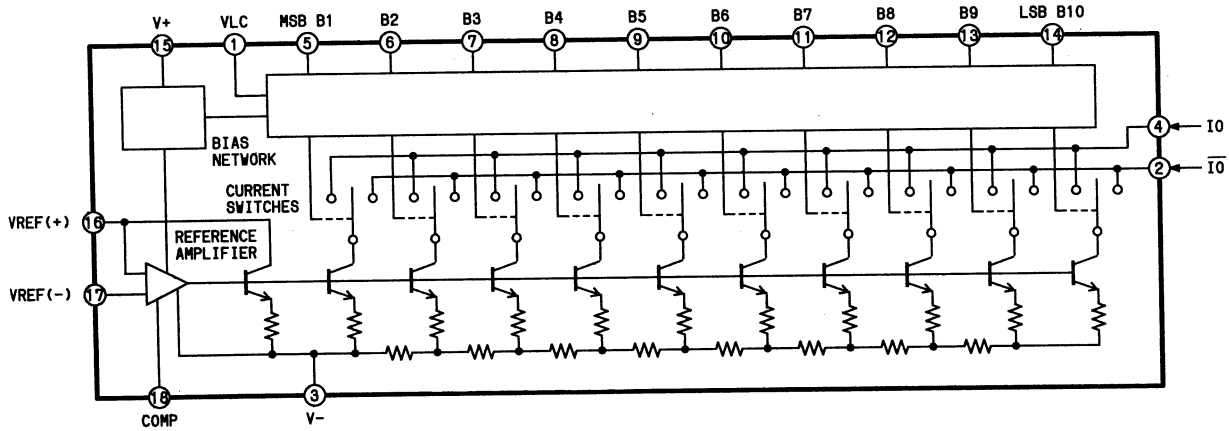

EP910 (C-MOS EPROM) (TOP VIEW)

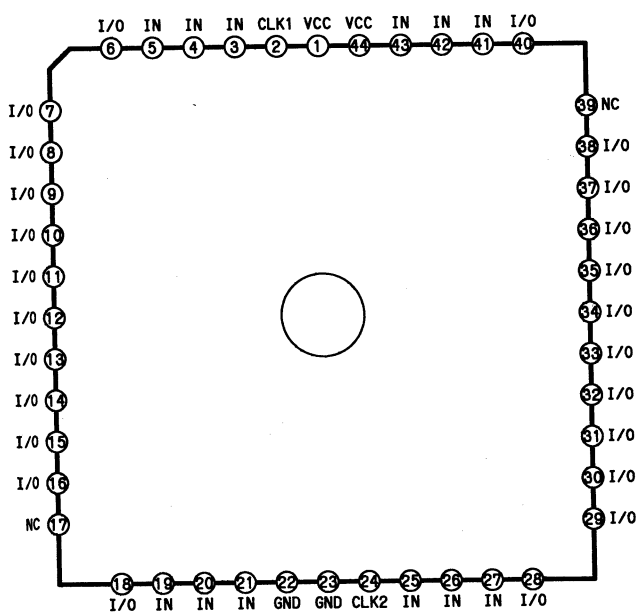

EP610
(16 MACROCELL EPLD)

(TOP VIEW)

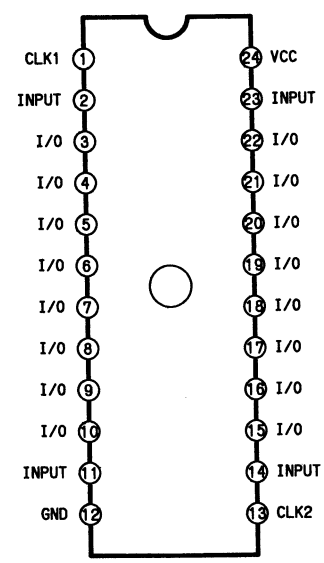

EPM5032 (C-MOS EPLD)

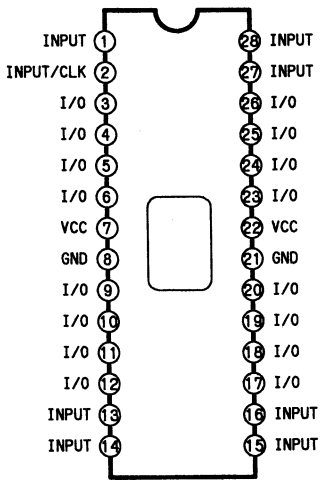

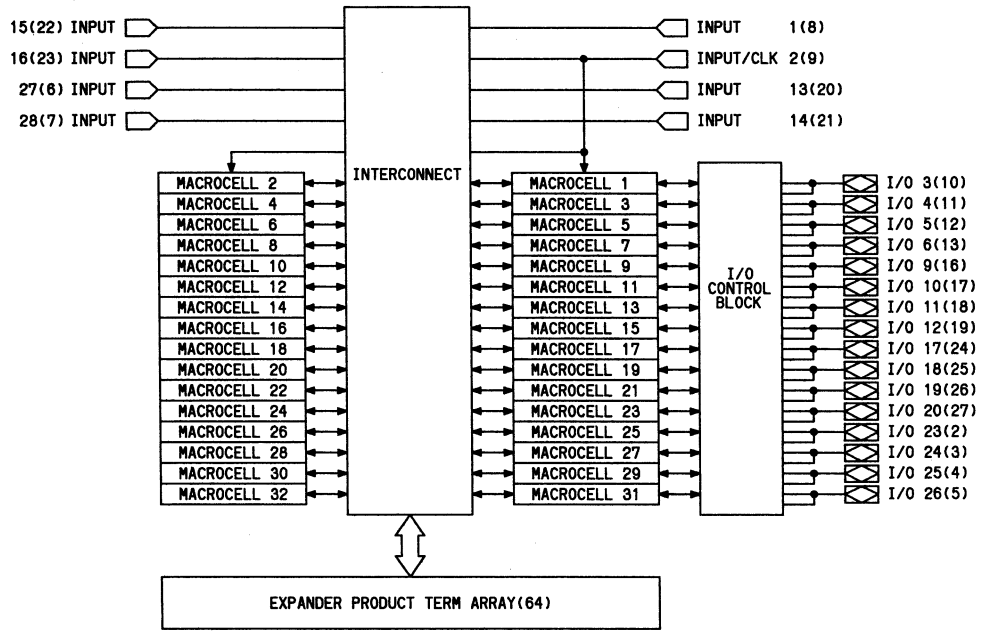

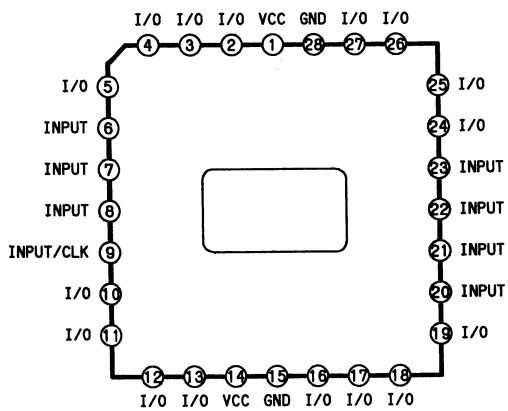

EP8448
(STAND-ALONE MICRO SEQUENCER)

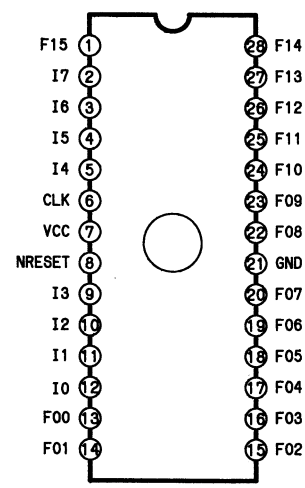

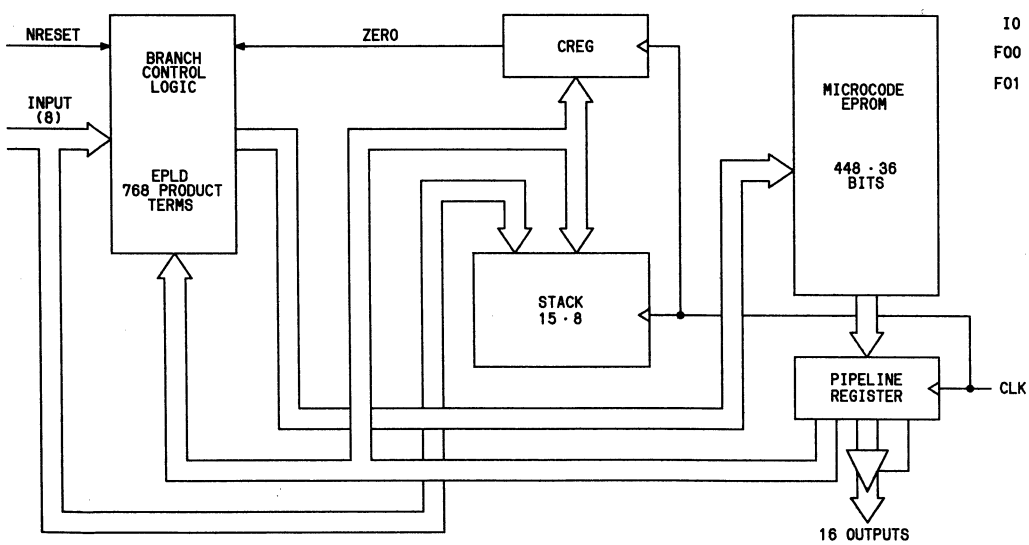

GAL16V8A

(E^3 CMOS 64×32 PROGRAMMABLE AND ARRAY)

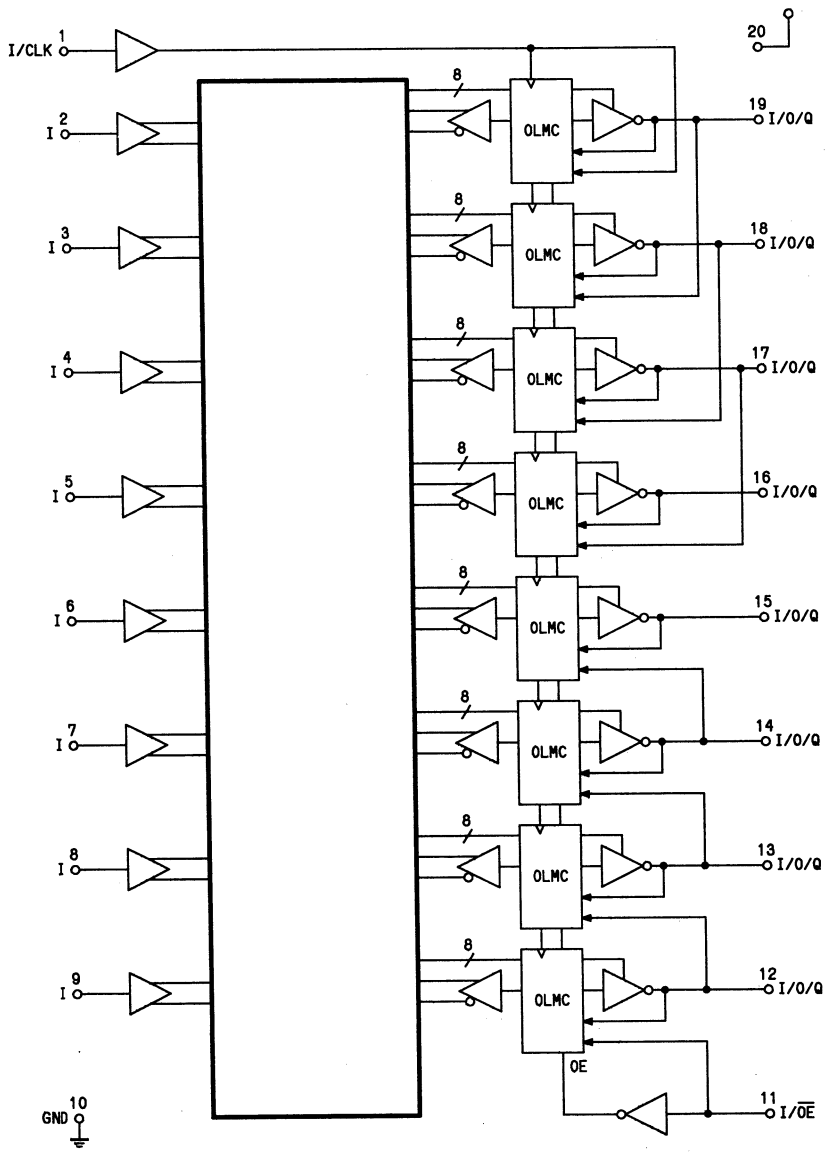

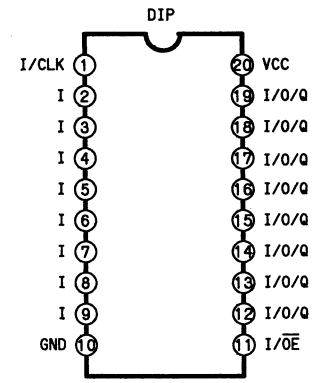

HD10125

(QUADRUPLE ECL TO TTL TRANSLATORS)

(TOP VIEW)

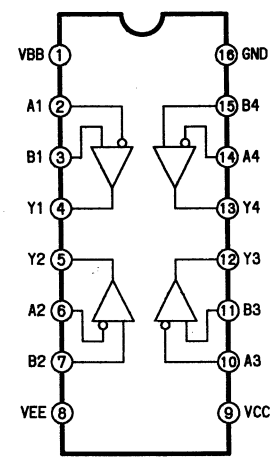

GAL22V10
(PROGRAMMABLE AND-ARRAY(132 × 44))

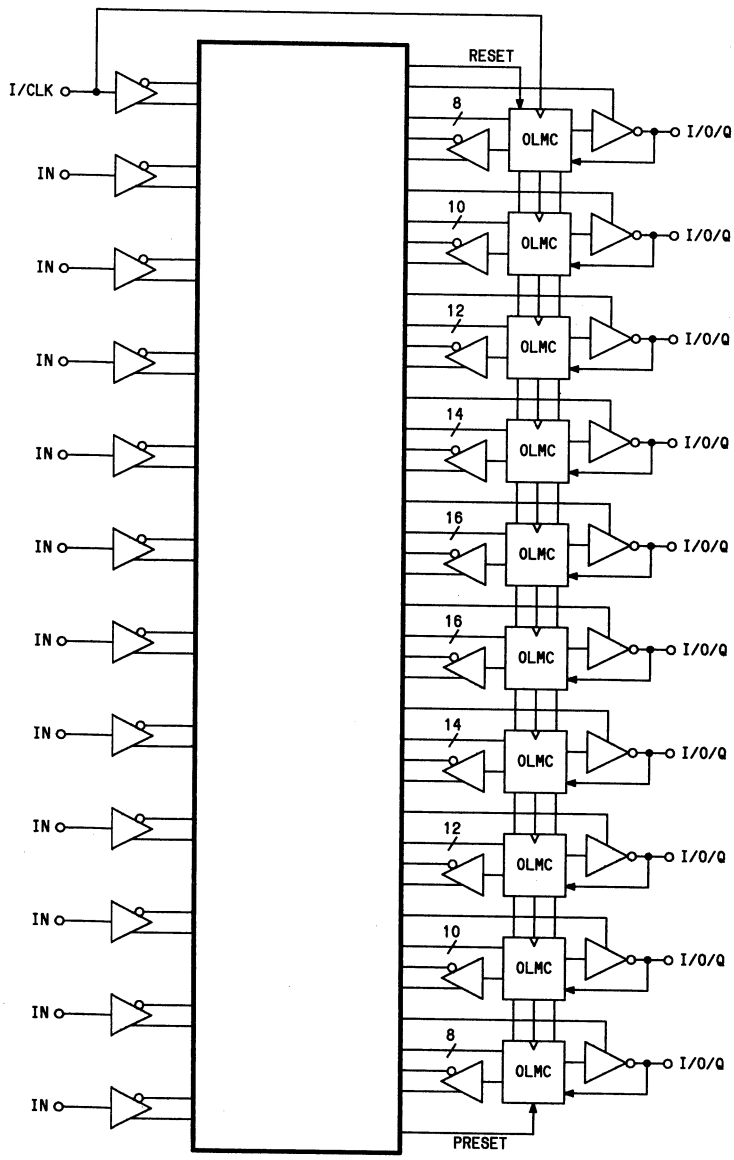

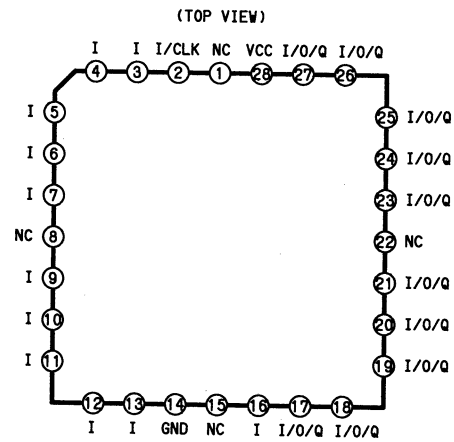

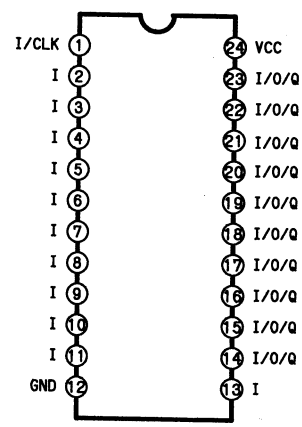

GAL6001 (PROGRAM AND-ARRAY)

(TOP VIEW)

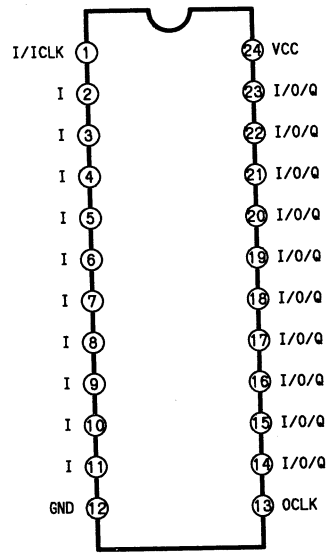

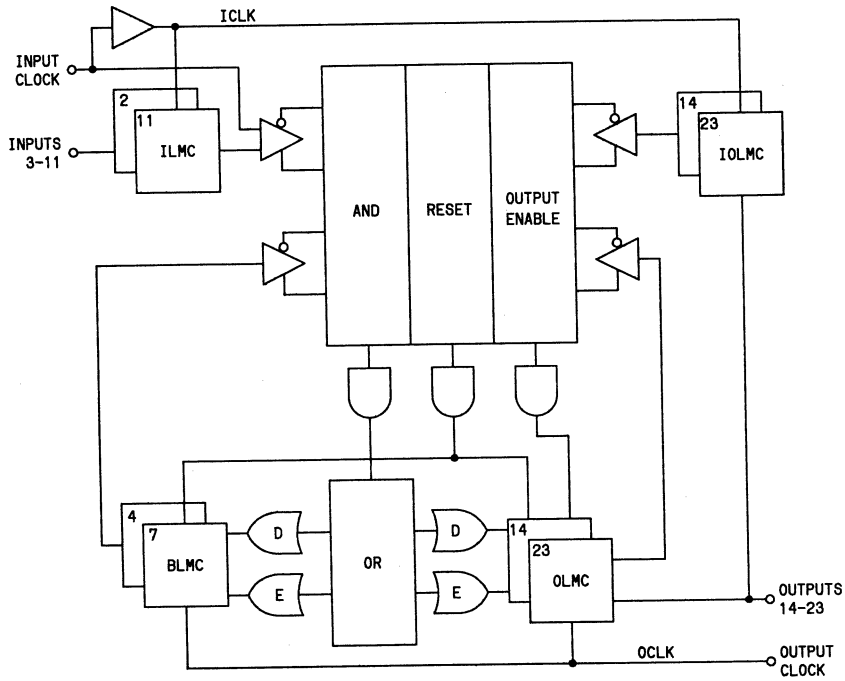

(TOP VIEW)

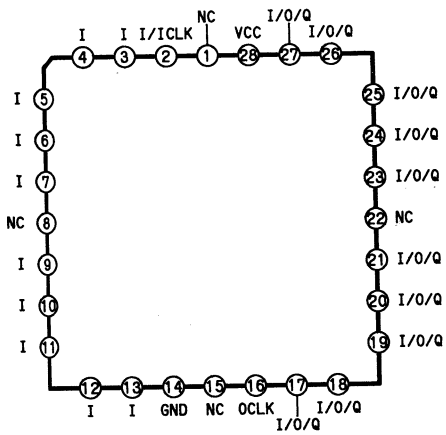

IDTFCT399ASO (LATCH)

(TOP VIEW)

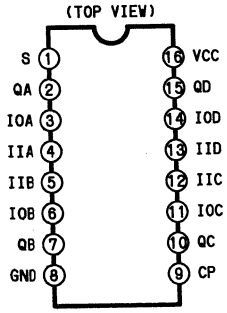

INPUTS			OUTPUTS
S	IO	II	Q
I	I	X	L
I	h	X	H
h	X	I	L
h	X	h	H

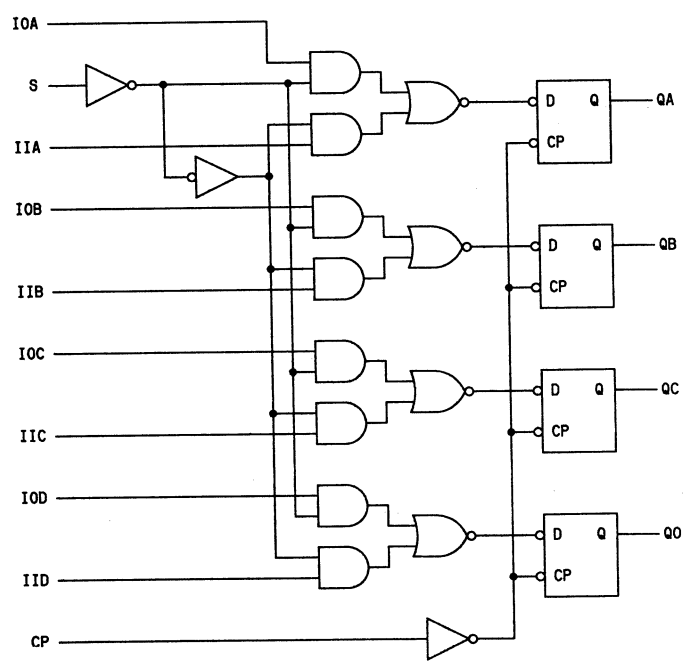

HD64180
(8BIT MC)

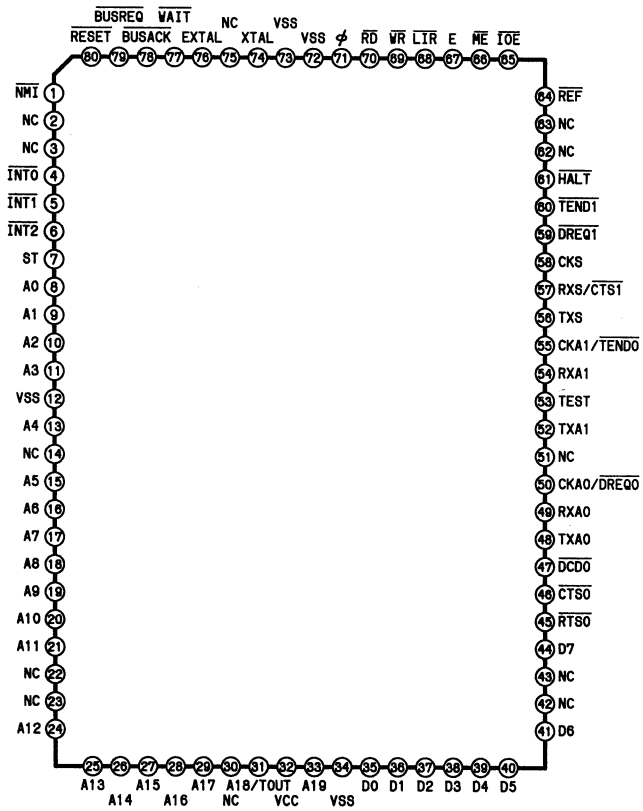

HM62832P-35
(262,144-BIT C-MOS RAM)

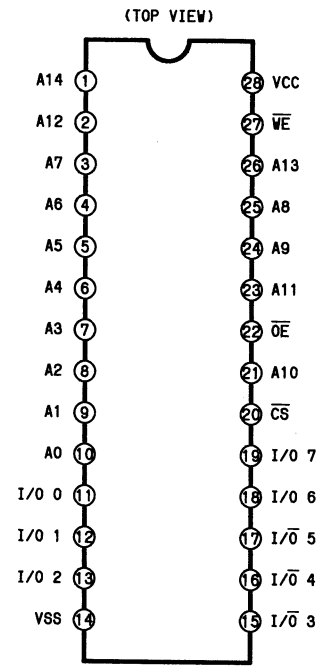

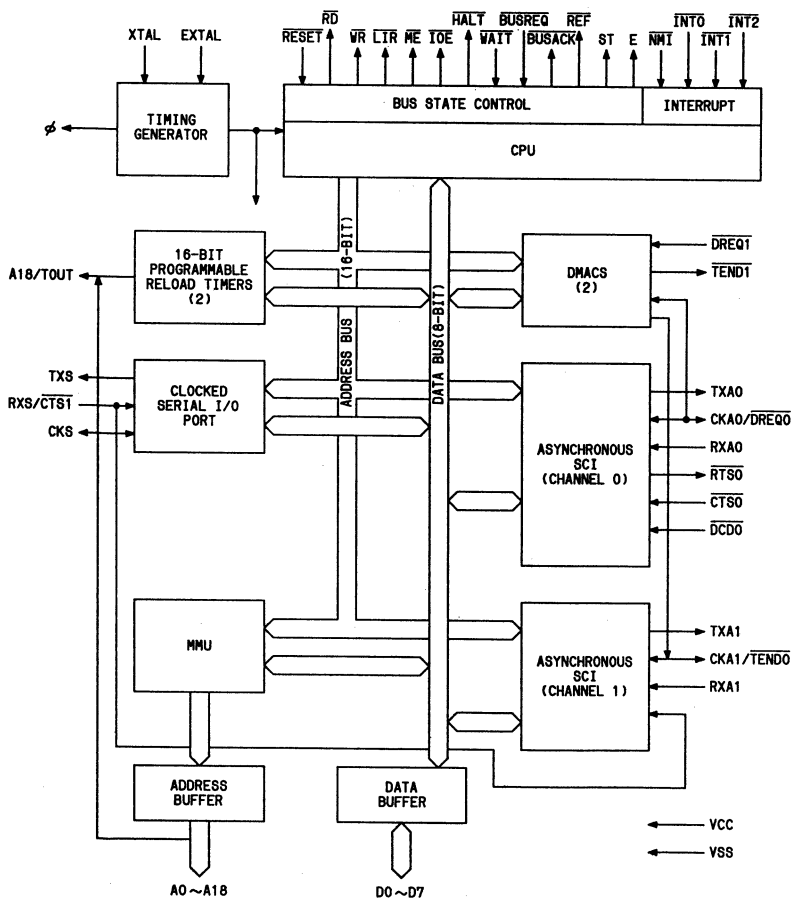

IDTFCT823BSO (LATCH)

(TOP VIEW)

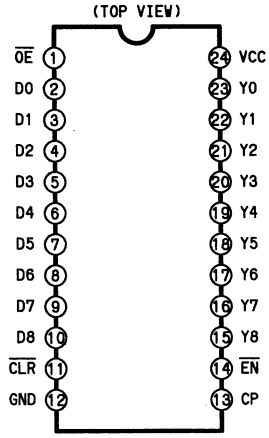

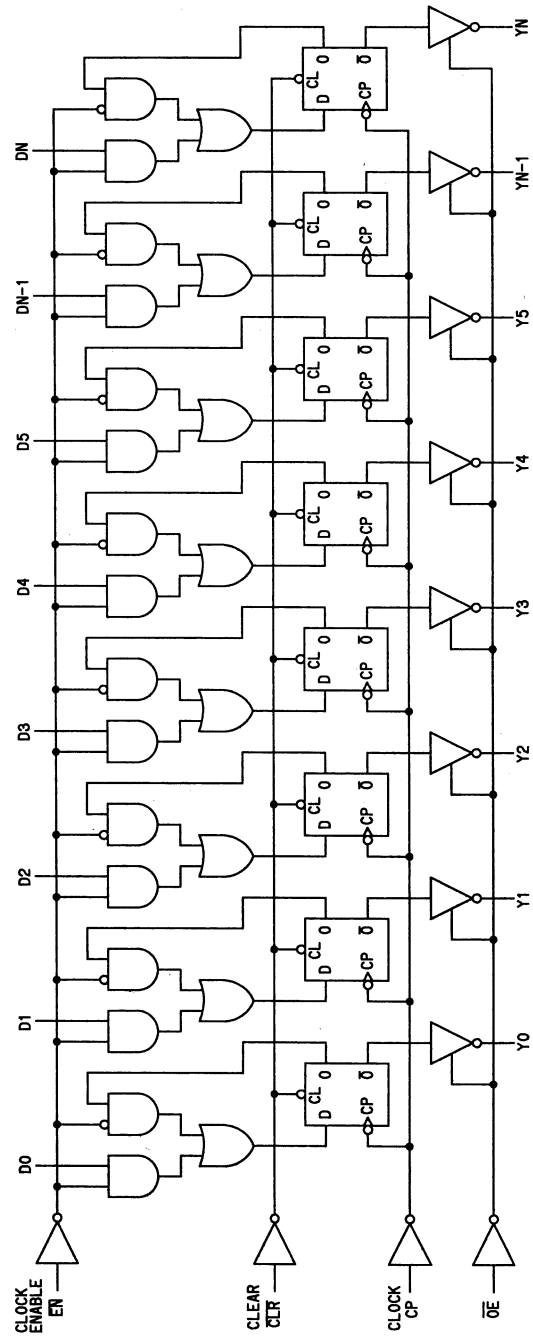

IDTFCT825AP (LATCH)

(TOP VIEW)

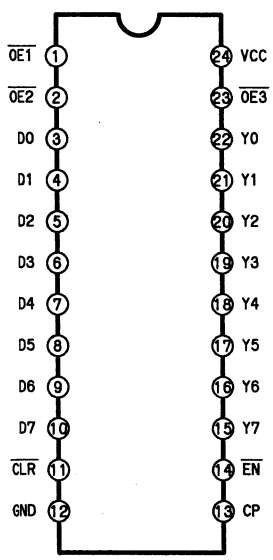

TRUTH TABLE

INPUTS					INTERNAL OUTPUTS		FUNCTION
OE	CLR	EN	D1	CP	Q1	Y1	
H	X	L	L	↑	L	Z	HIGH Z
H	X	L	H	↑	H	Z	
H	L	X	X	X	L	Z	CLEAR
L	L	X	X	X	L	L	
H	H	H	X	X	NC	Z	HOLD
L	H	H	X	X	NC	NC	
H	H	L	L	↑	L	Z	LOAD
H	H	L	H	↑	H	Z	
L	H	L	L	↑	L	L	
L	H	L	H	↑	H	H	

H:HIGH L:LOW X:DON'T CARE
NC:NO CHANGE ↑:LOW TO HIGH TRANSITION
Z:HIGH IMPEDANCE

INPUTS					INTERNAL OUTPUTS		FUNCTION
OE	CLR	EN	D1	CP	O1	Y1	
H	X	L	L	T	L	Z	HIGH Z
H	X	L	H	T	H	Z	
H	L	X	X	X	L	Z	CLEAR
L	L	X	X	X	L	L	
H	H	H	X	X	NC	Z	HOLD
L	H	H	X	X	NC	NC	
H	H	L	L	T	L	Z	LOAD
H	H	L	H	T	H	Z	
L	H	L	L	T	L	L	
L	H	L	H	T	H	H	

L7A0343 (OUTER ECC DECODER)
(160 PIN QFP)

(TOP VIEW)

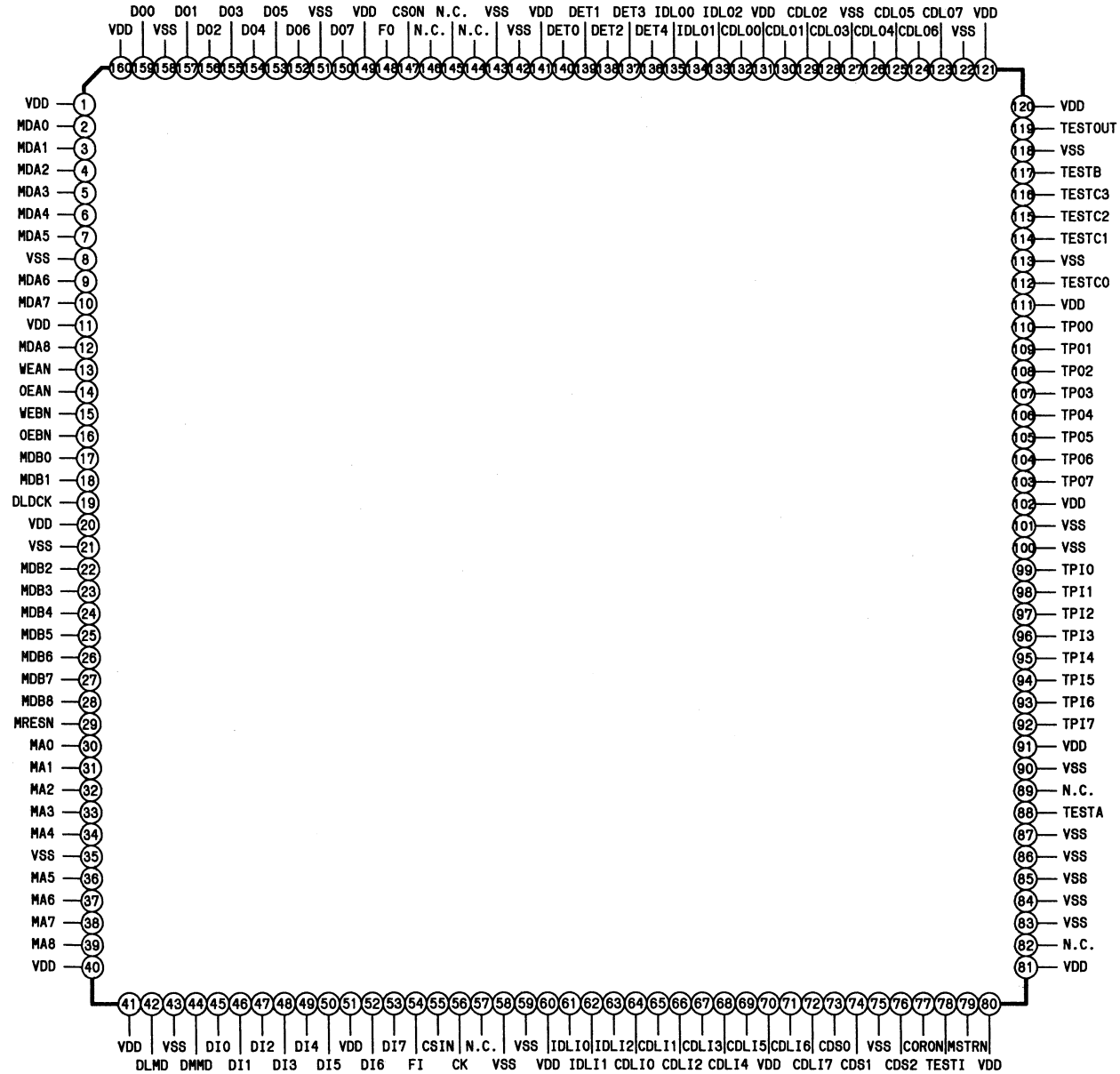

L7A0541

(80PIN QFP)

(TOP VIEW)

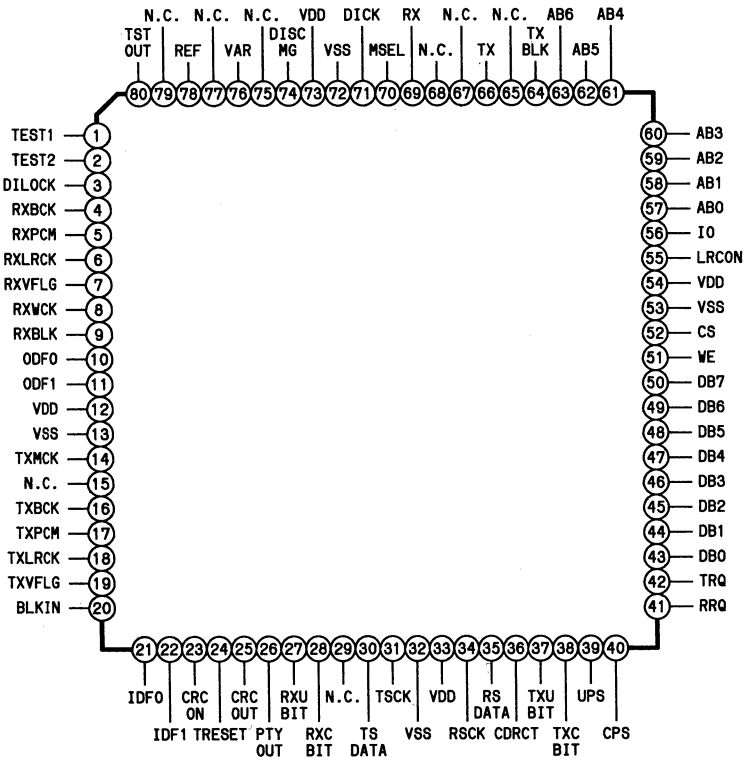

LM2902

(4 INPUTS SIGNAL SOURCE OP AMP)

(TOP VIEW)

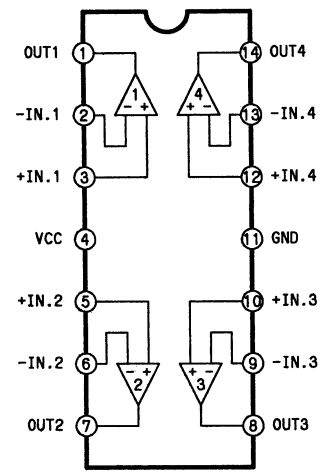

LM2904

(2 INPUTS SINGLE SOURCE OP AMP)

(TOP VIEW)

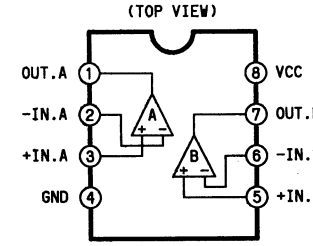

L7A0651

(80PIN QFP)

(TOP VIEW)

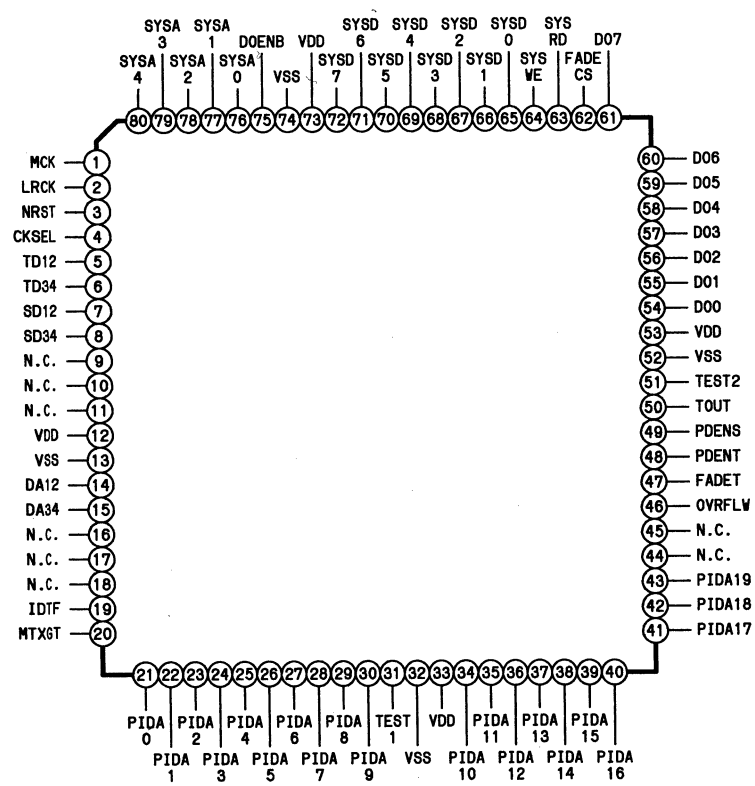

LM319

(DUAL VOLTAGE COMPARATOR)

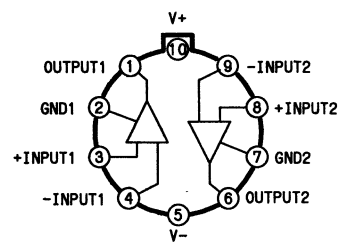

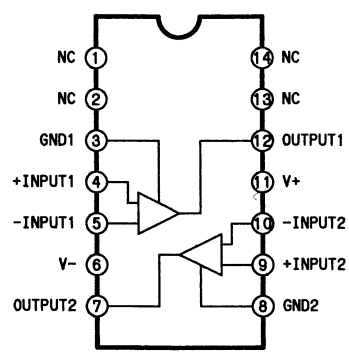

L7A0674 (PCM REC)
(160 PIN QFP)

(TOP VIEW)

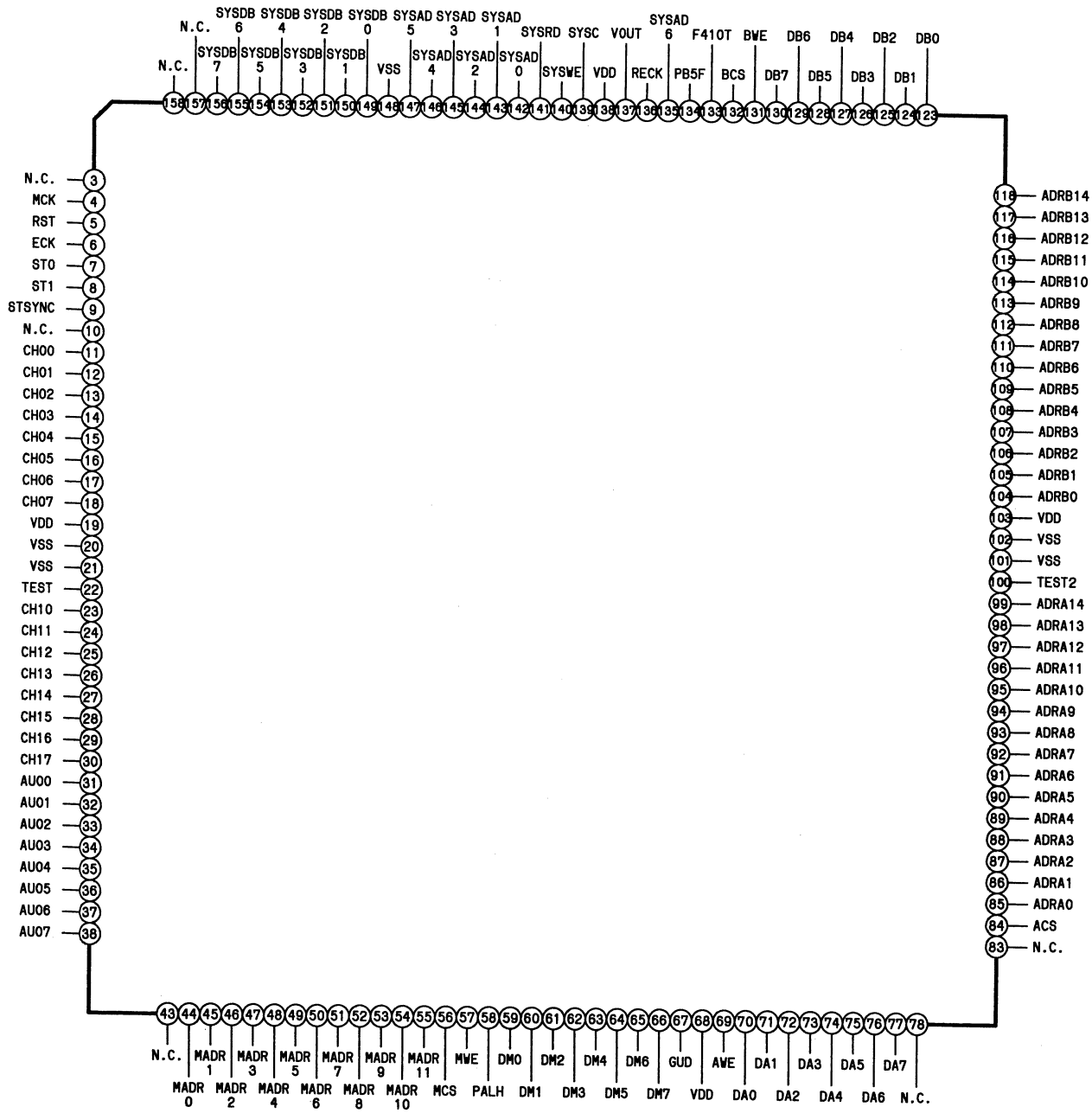

LM337

(BOTTOM VIEW)

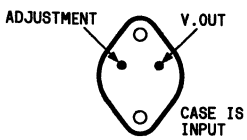

(FRONT VIEW)

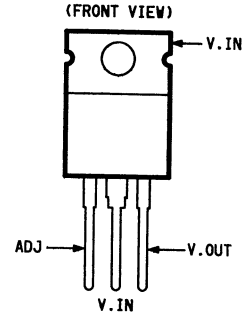

L7A0782 (AUDIO DESHUFFLE)

(TOP VIEW)

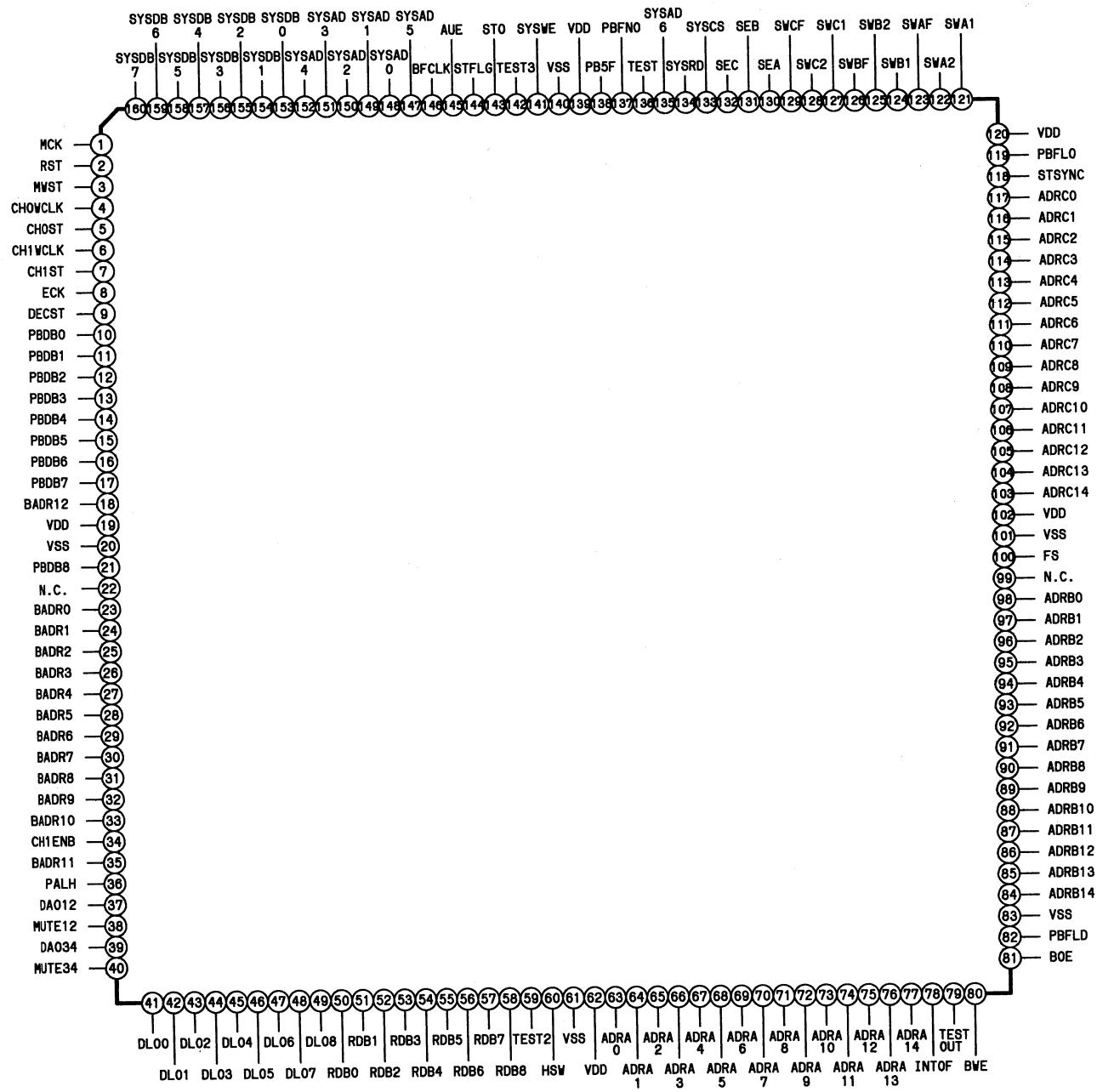

M51951

(VOLTAGE DETECTOR/DELAY CIRCUIT)

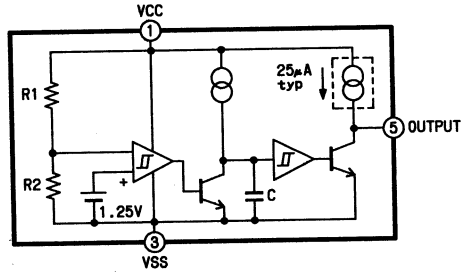

M5165FP-10L (8-BIT RAM)

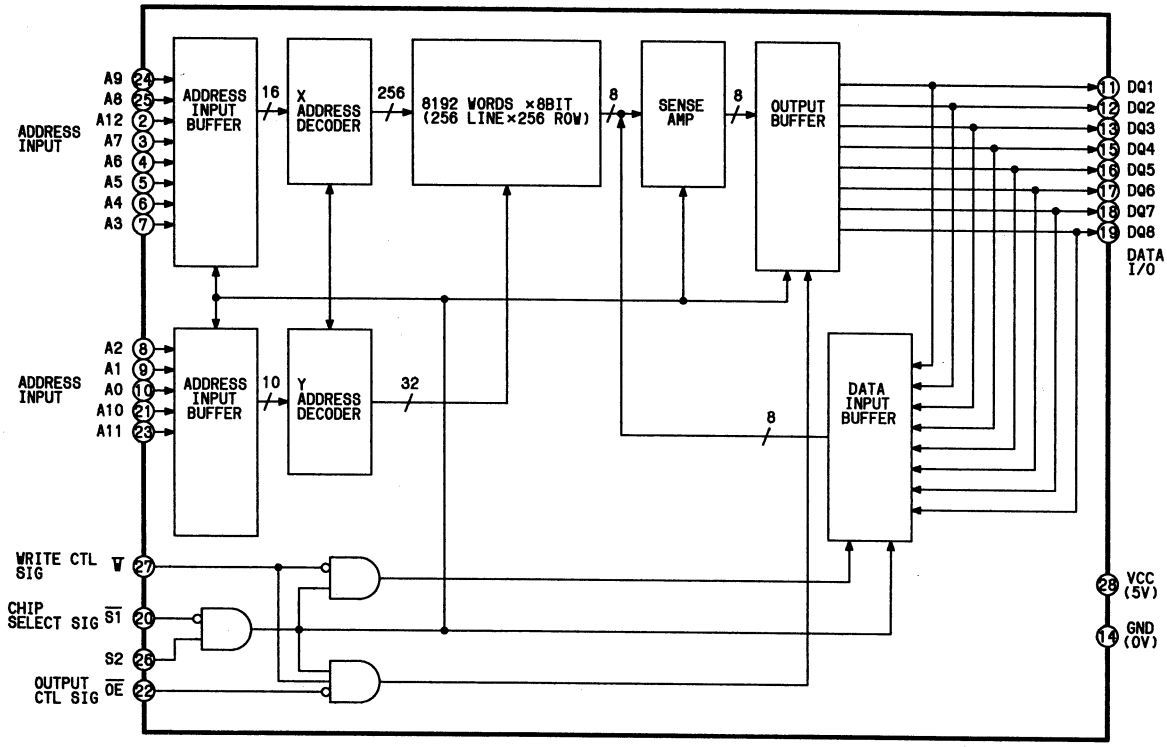

M5256BFP-70 (8-BIT RAM)

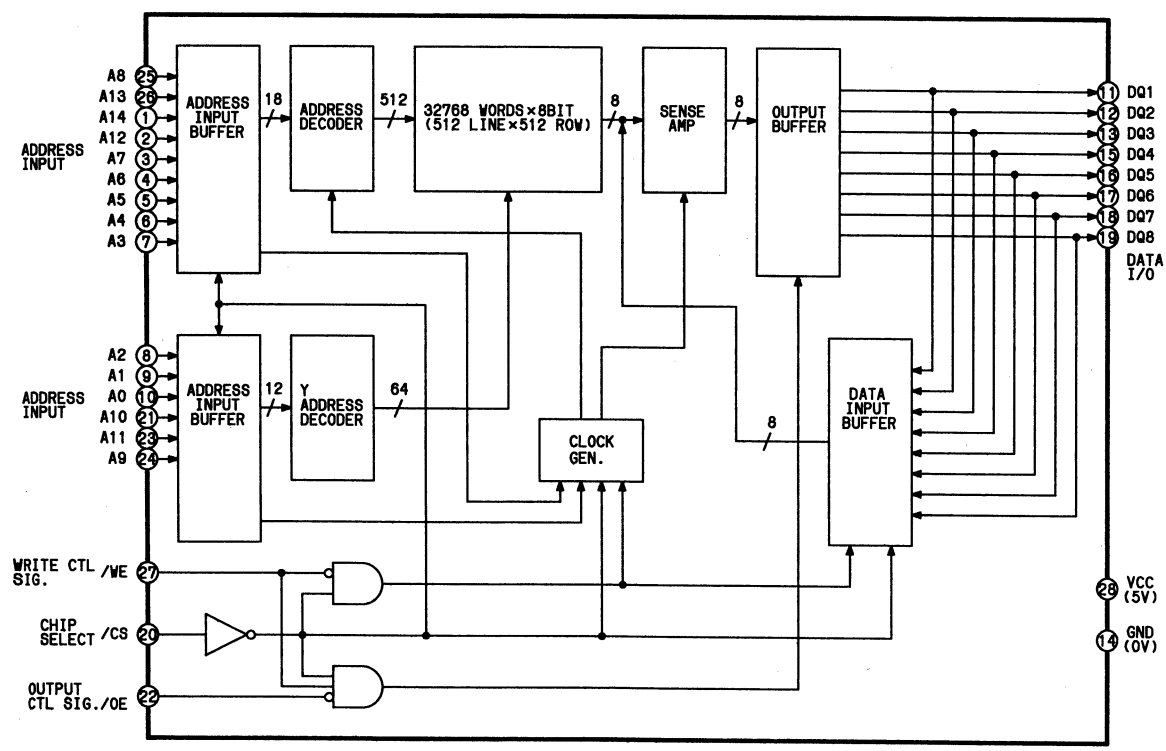

M5206P
(DUAL VCA FOR ELECTRONIC VOLUME)
(TOP VIEW)

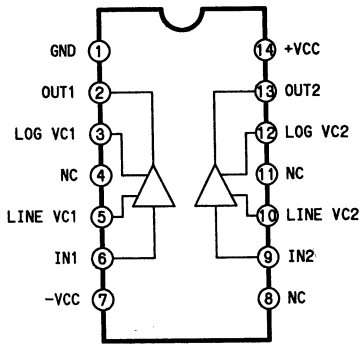

M5M4464AL-12

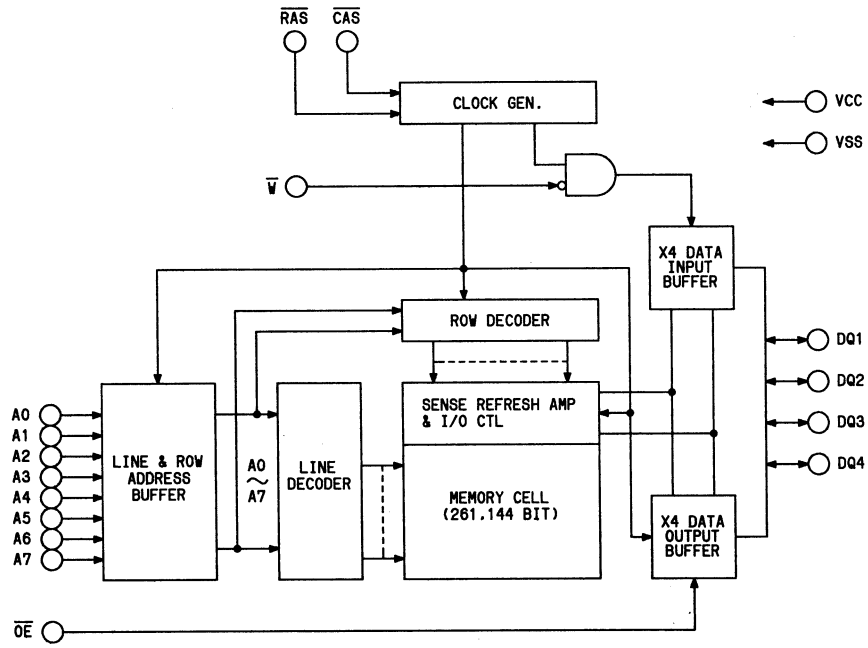

M5M5257P-35 (S-RAM)

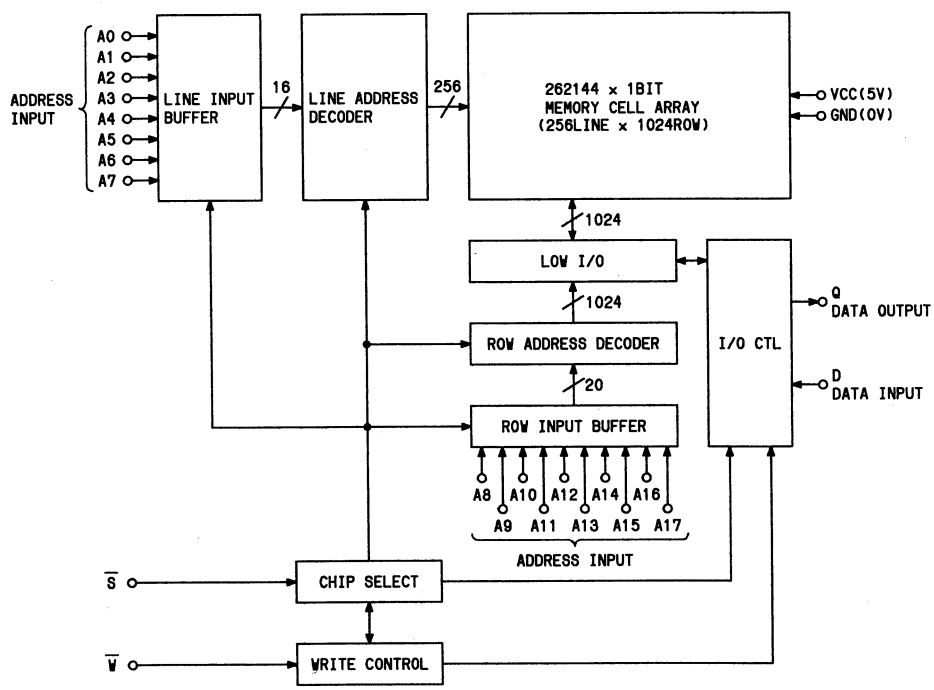

MB121M246 (PARALLEL SERIAL CONVERTER)

(BOTTOM VIEW)

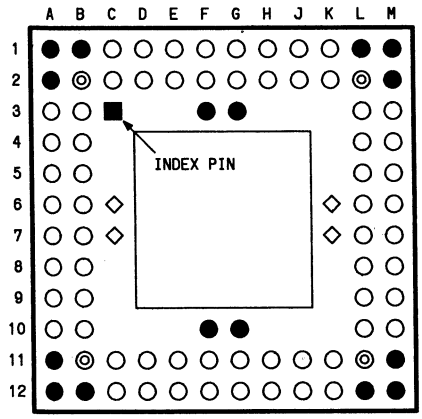

○ : SIGNAL PIN

● : GND

◇ : VEE = -5.2V

◎ : VCC = +5V

PIN NO.	I/O	PIN NAME	PIN NAME	PIN NO.	I/O	PIN NAME	PIN NAME
B10	B	BP01	AD1	F01	O	W21	A2WCLK
A10	B	BP00	AD0	E02	O	XW1	XAWCLK
B09	B	BP03	AD3	E01	O	W1	AWCLK
A09	B	BP02	AD2	D01	O	OCK1	ARECLK
A08	B	BP04	AD4	D02	O	XOK1	XARECLK
B08	B	BP05	AD5	C01	O	OS1	AREDATA
A07	B	BP06	AD6	C02	O	XOS1	XAREDATA
B07	I	ASYC	ASYIN	K11	I	XIS2	BPBDATA
B06	I	APS1	ASUPOS1	K12	I	IS2	XBPBDATA
A06	I	APS0	ASYPOS0	J11	-	IG01	IG01
B05	I	APS3	ASYPOS3	J12	-	IG02	IG02
A05	I	APS2	ASYPOS2	H12	I	CK2	BPBCLK
A04	O	S01	ASTOUT	H11	I	XCK2	XBPBCLK
B04	O	XS01	XASYOUT	G12	I	RSET	RSET
A03	O	W2T1	A2WCLKT	G11	-	IG03	IG03
B03	O	WT1	AWCLKT	F11	-	IG04	IG04
K02	O	XOS2	BREDATA	F12	I	RECL	RECL
K01	O	OS2	XBREDATA	E11	I	XCK1	XAPBCLK
J02	O	XOK2	BRECLK	E12	I	CK1	APBCLK
J01	O	OCK2	XBRECLK	D12	-	IG05	IG05
H01	O	W2	BWCLK	D11	-	IG06	IG06
H02	O	XW2	XBWCLK	C12	I	IS1	APBDATA
G01	O	W22	B2WCLK	C11	I	XIS1	XAPBDATA
G02	O	XW22	XB2WCLK	L10	B	BP11	BD1
F02	O	XW21	XA2WCLK	M10	B	BP10	BD0
L09	B	BP13	BD3	M06	I	BPS0	BSYPOS0
M09	B	BP12	BD2	L05	I	BPS3	BSYPOS3
M08	B	BP14	BD4	M05	I	BPS2	BSYPOS2
L08	B	BP15	BD5	M04	O	S02	BSYOUT
M07	B	BP16	BD6	L04	O	XS02	XBSYOUT
L07	I	BSYC	BSYIN	M03	O	W2T2	B2WCLKT
L06	I	BPS1	BSYPOS1	L03	O	WT2	BWCLKT

MB40576P (WINDOW AND ENCODER)

(TOP VIEW)

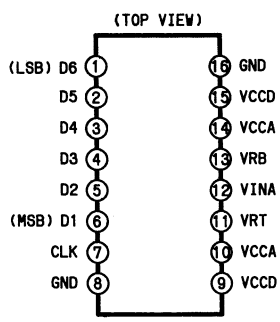

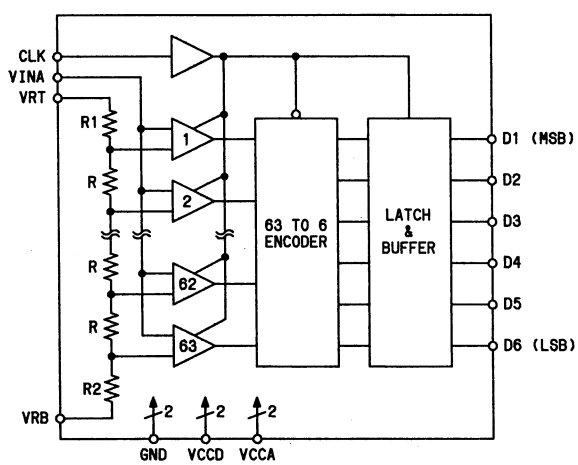

MB813AZ (LATCH)

(TOP VIEW)

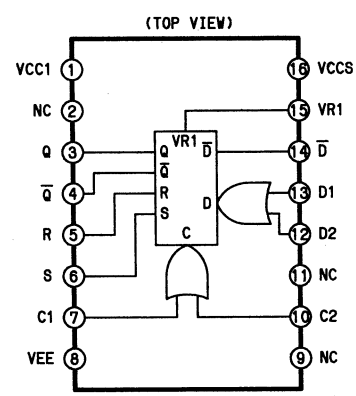

INPUT				OUTPUT	
SET S	RESET R	CLOCK C	DATA D	Q	Q̄
H	H	X	X	*	*
H	L	X	X	H	L
L	H	X	X	L	H
L	L	↑	H	H	L
L	L	↑	L	L	H
L	L	L	X	Q0	Q0

MB81C68A35PS

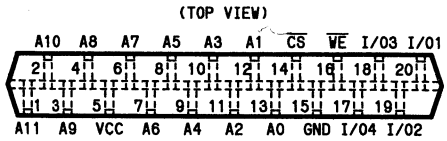

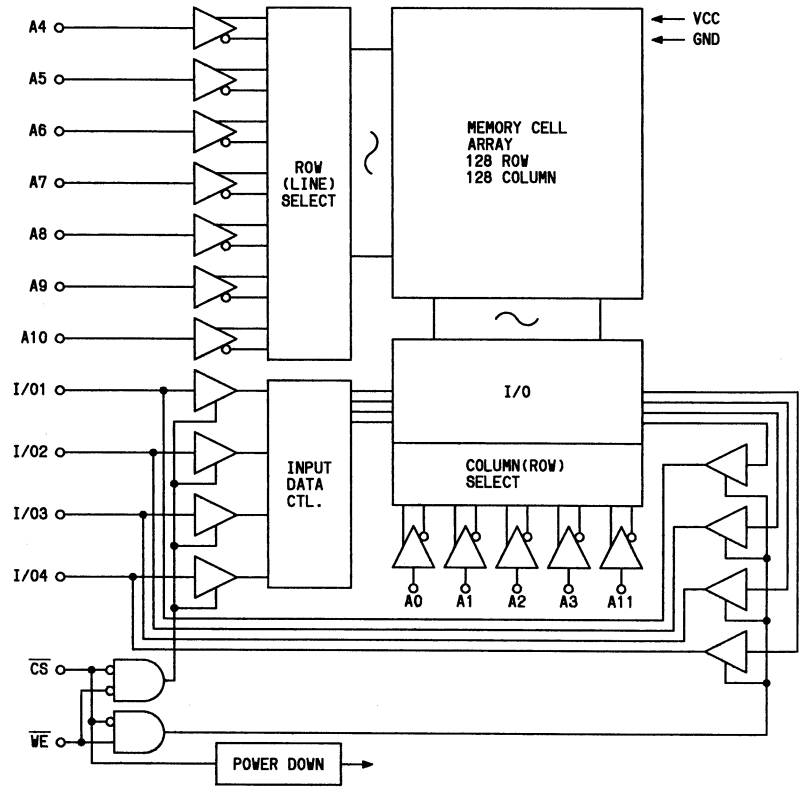

MB81C78A35PF (8K MEMORY)

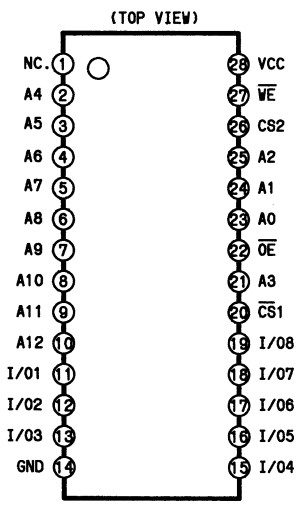

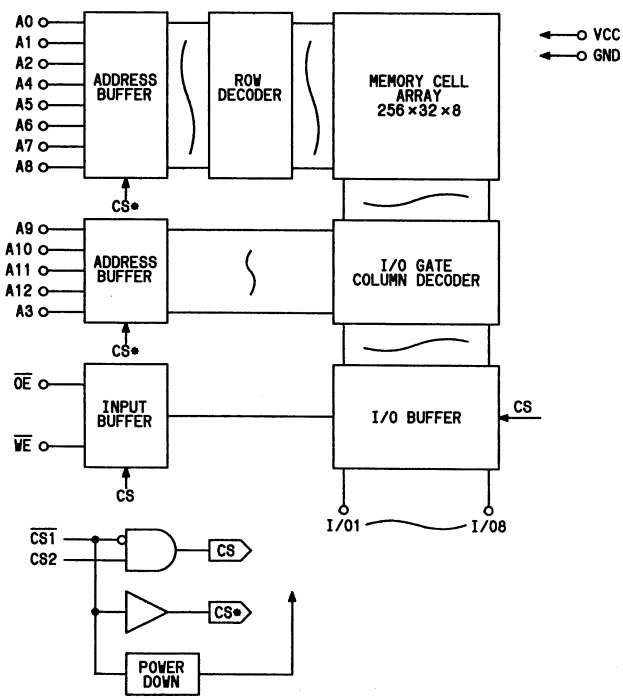

MB81C79A35PF (8K MEMORY)

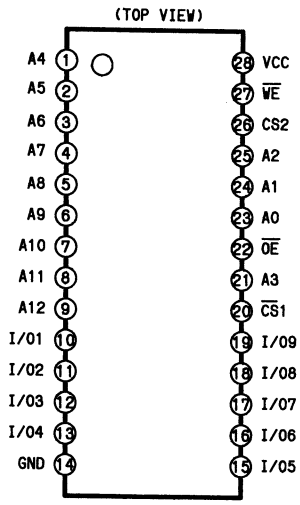

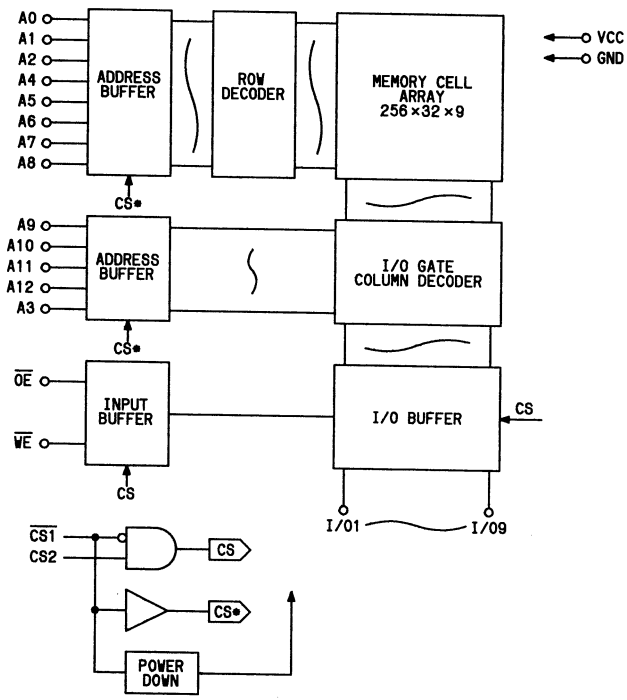

MB8289-25PF (FIELD MEMORY)

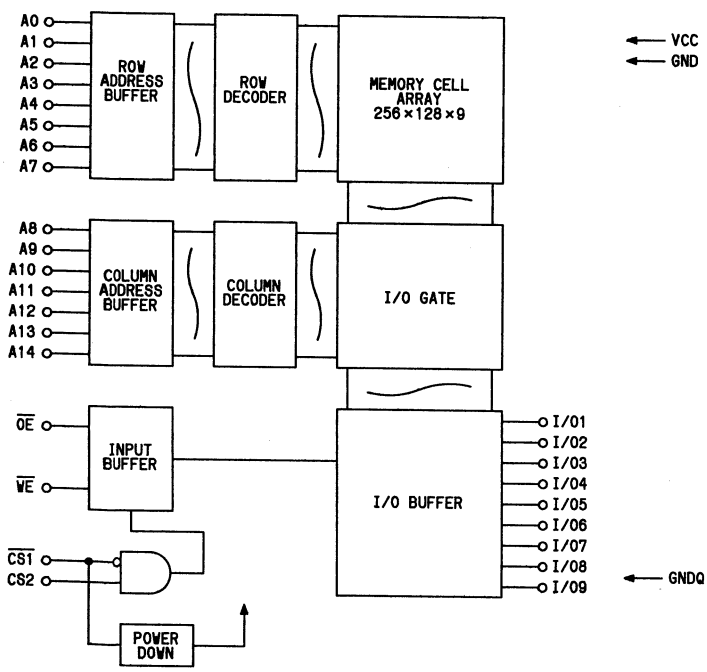

MC10104
(QUAD 2-INPUT AND GATE)

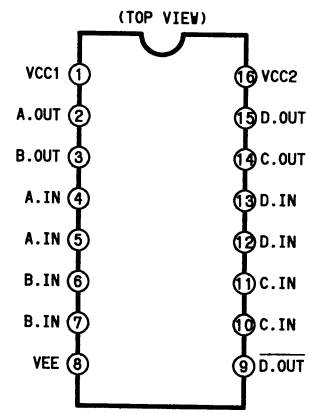

MC10115
(QUAD LINE RECEIVER)

(TOP VIEW)

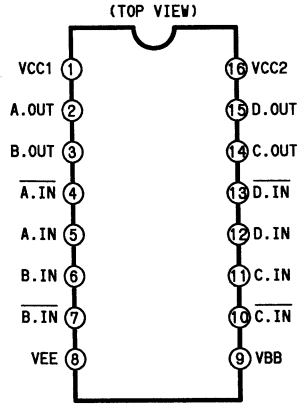

LOGIC DIAGRAM

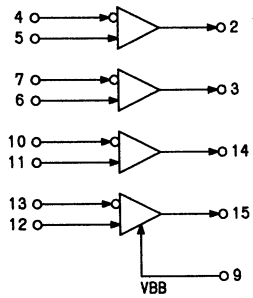

MC10124
(QUAD TTL TO MECL TRANSLATOR)

(TOP VIEW)

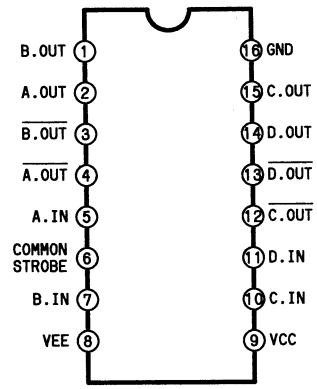

LOGIC DIAGRAM

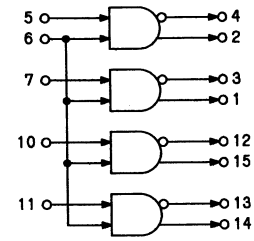

MC10131
(DUAL TYPED MASTER-SLAVE FLIP-FLOP)

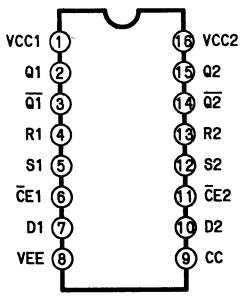

(LOGIC DIAGRAM)

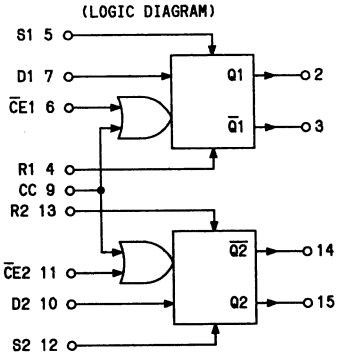

CLOCKED TRUTH TABLE

C	D	QN-1
L	ϕ	QN
H	L	L
H	H	H

R-S TRUTH TABLE

R	S	QN-1
L	L	QN
L	H	H
H	L	L
H	H	N.D.

ϕ=DON'T CARE
C=CE+CC
A CLOCK H IS A CLOCK TRANSITION FROM A LOW TO A HIGH STATE.

N.D.=NOT DEFINED

MC10116
(TRIPLE DIFFERENTIAL LINE RECEIVER)

(TOP VIEW)

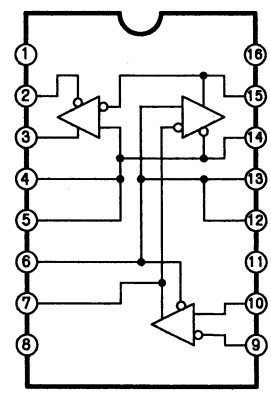

MC10H102
(QUAD 2-INPUT NOR GATE)

(TOP VIEW)

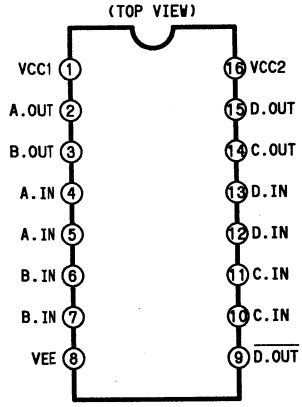

MC10H107
(TRIPLE 2-INPUT EXCLUSIVE "OR"/EXCLUSIVE "NOR")

(TOP VIEW)

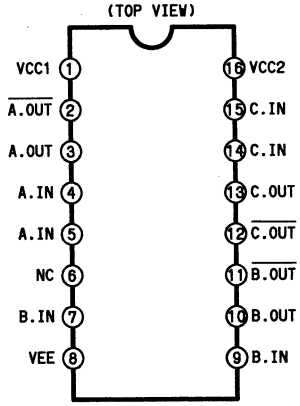

MC10H116
(TRIPLE LINE RECEIVER)

(TOP VIEW)

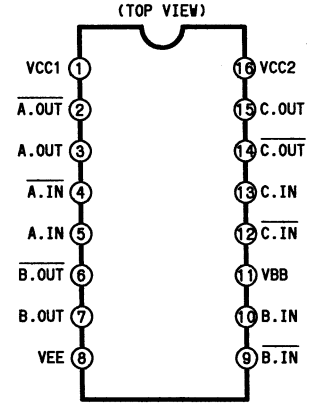

LOGIC DIAGRAM

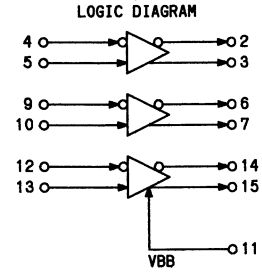

MC10H176
(HEX "D" MASTER-SLAVE FLIP-FLOP)

LOGIC DIAGRAM

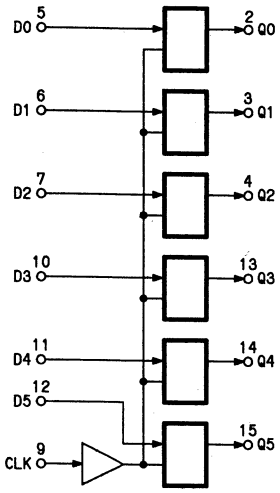

VCC1=PIN1
VCC2=PIN16
VEE=PIN8

MC1495L
(ANALYSIS AND BASIC OPERATION)

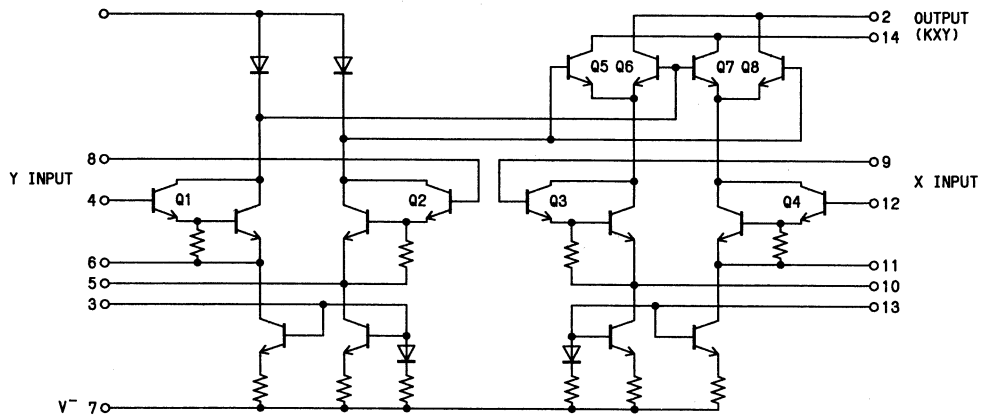

MC34051
(DUAL RS-422/423 TRANSCEIVER)

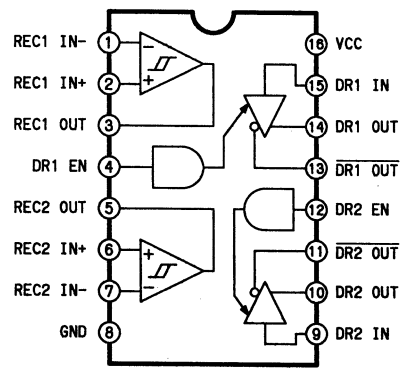

MN1287 (CHARACTOR GENERATOR)

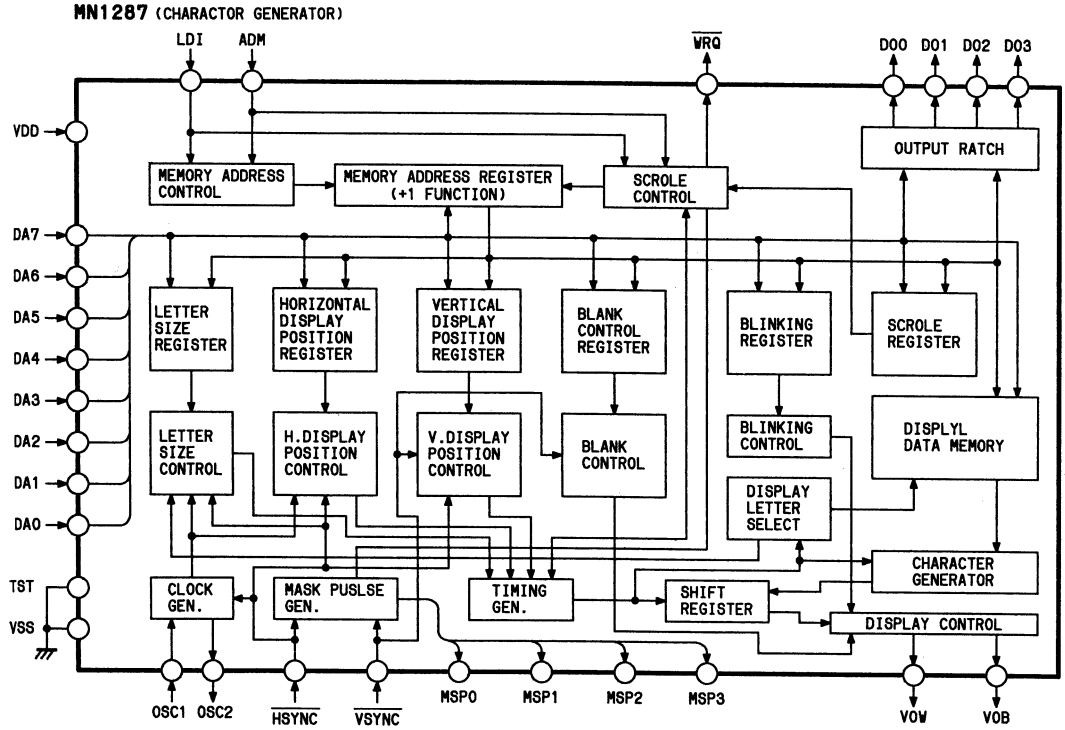

MN51040
(TIME CODE GENERATOR/READER)

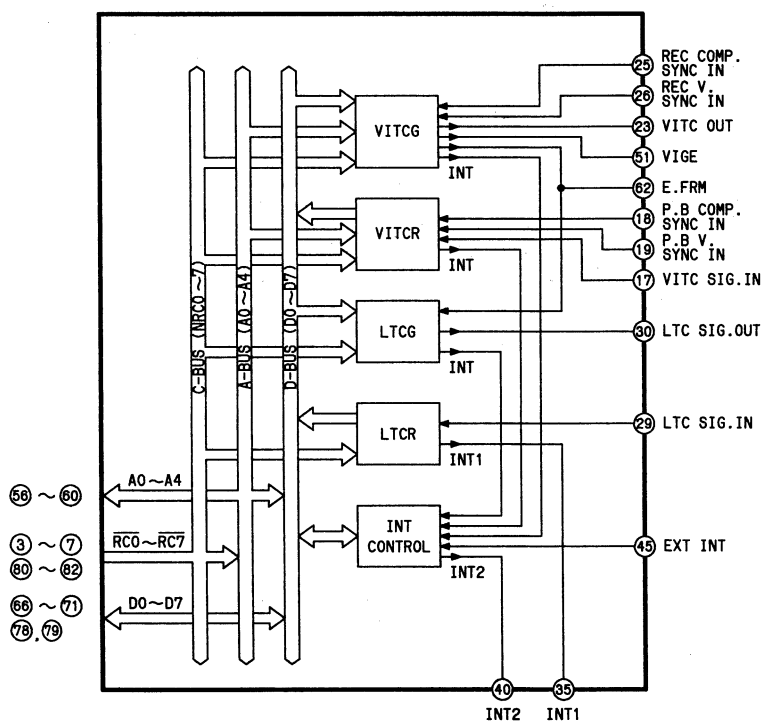

MN64731 (PWM D/A)

(TOP VIEW)

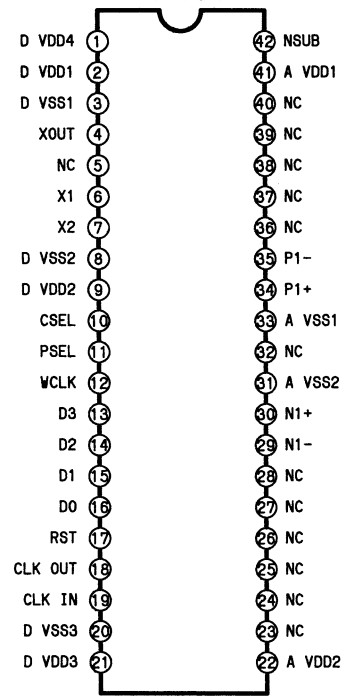

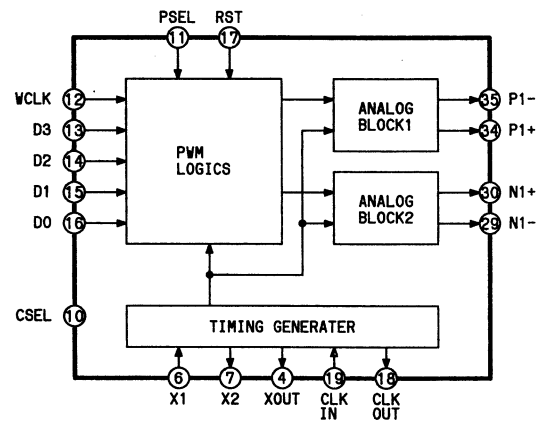

MN53015VZW
(1500 GATES C-MOS GATE ARRAY)

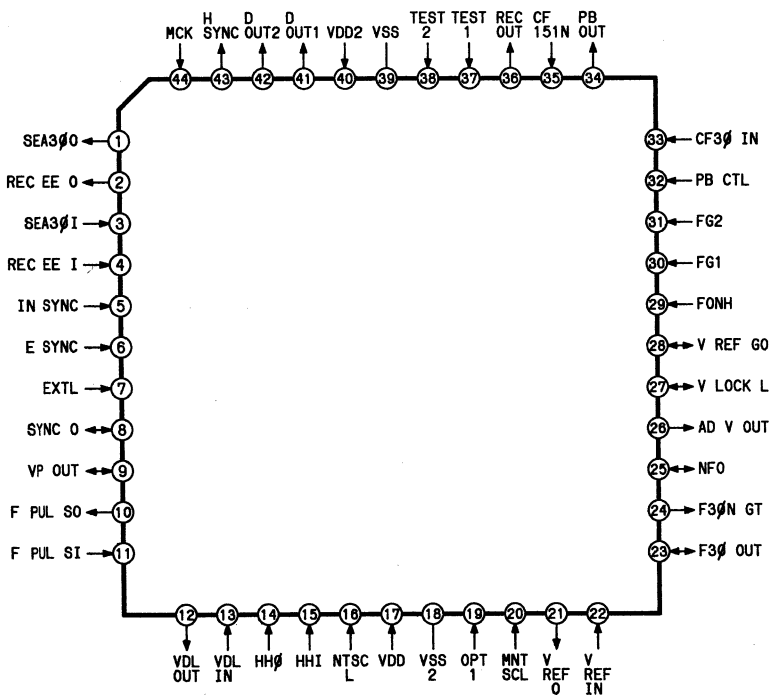

MN53040VPS (SELECTOR)

(TOP VIEW)

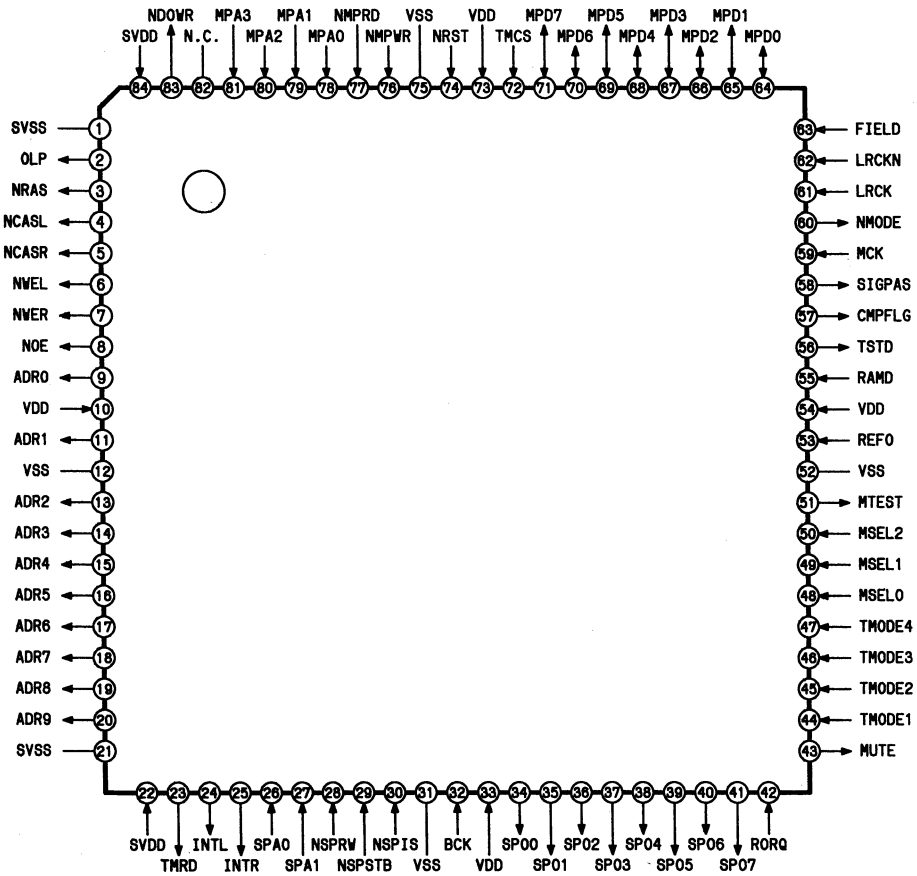

MN6631

(5-CHANNEL CMOS ELECTRONIC SWITCH)

(TOP VIEW)

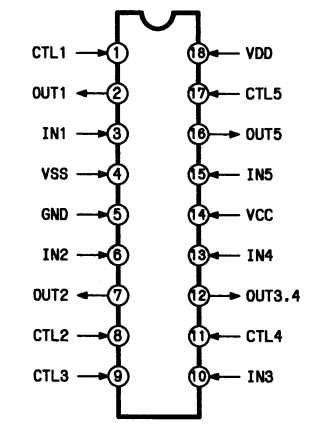

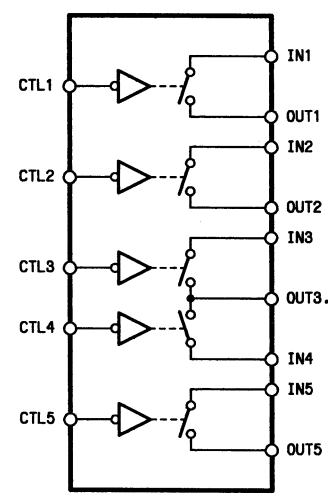

FUNCTION TABLE

INPUT	SWITCH
L	ON
H	OFF

MN53040VPQ (SELECTOR FOR A/D CONVERTER)

(TOP VIEW)

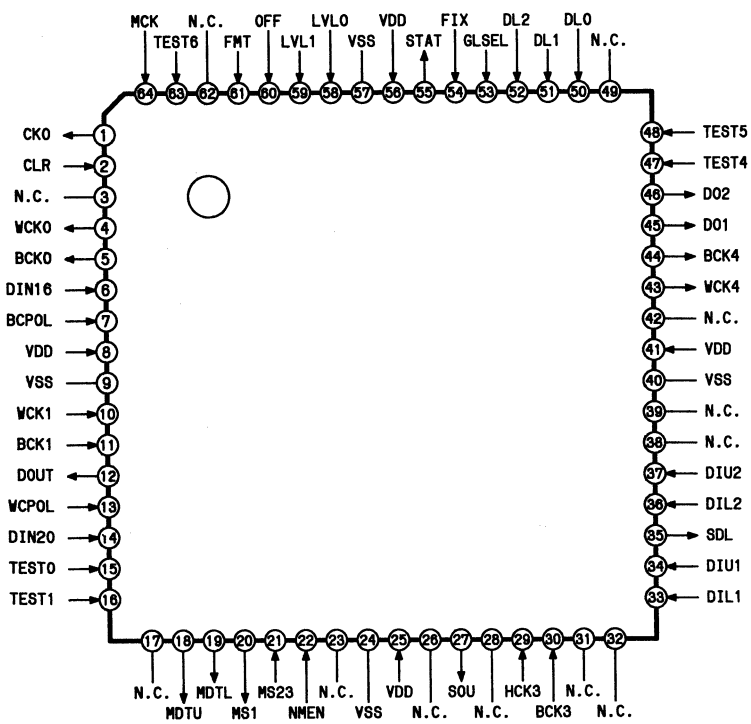

MN53030VYA (CONTROL FOR JOG)

(TOP VIEW)

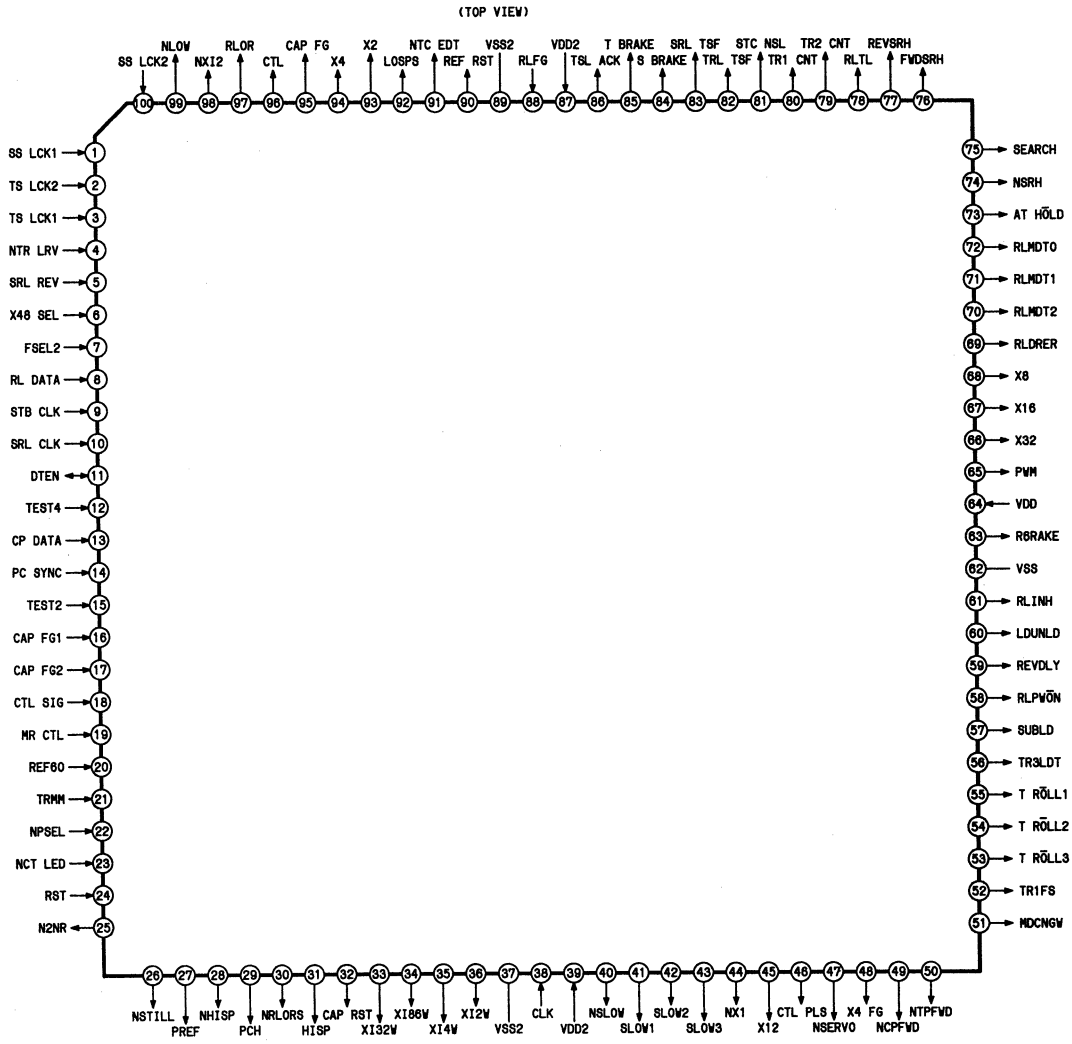

MN64730 (DIGITAL ATTENUATOR)

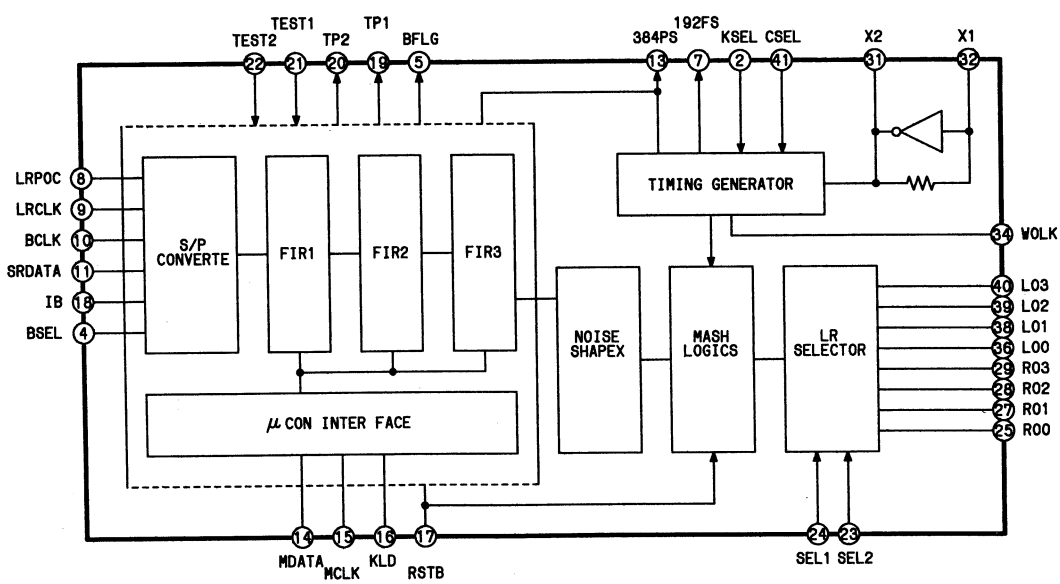

MN8305S (INTERPOLATION FOR JOG)

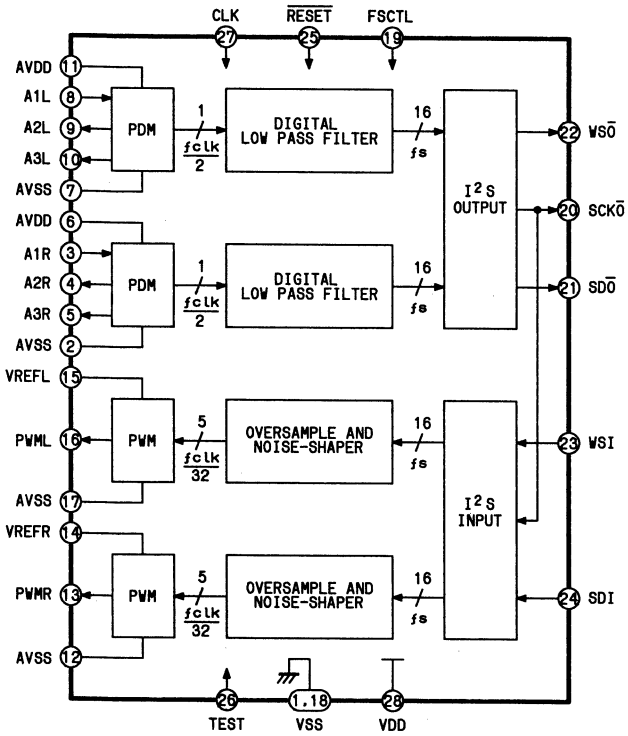

NE521
(HIGH SPEED DUAL DIFFERENTIAL COMPARATOR)

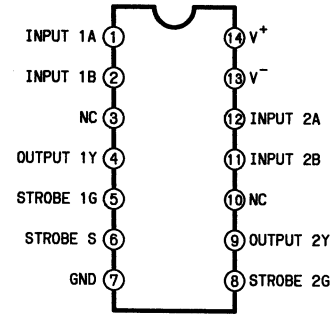

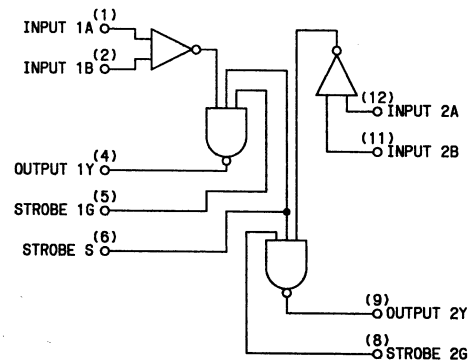

NE5539
(ULTRA HIGH FREQUENCY OPERATIONAL AMPLIFIER)
(TOP VIEW)

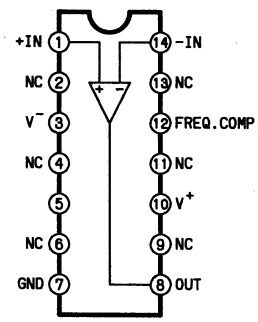

MP6901
(HIGH POWER SWITCHING)

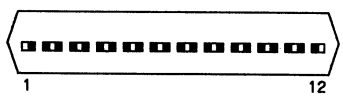

1.11.12	EMITTER
2.4.5.7.8.10	BASE
3.6.9	COLLECTOR

EQUIVALENT CIRCUIT

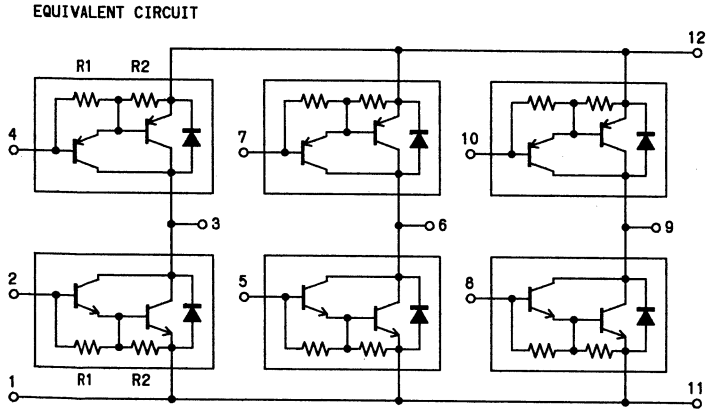

R1≈4.5KΩ R2≈300Ω

NE564
(PHASE LOCKED LOOP)
(TOP VIEW)

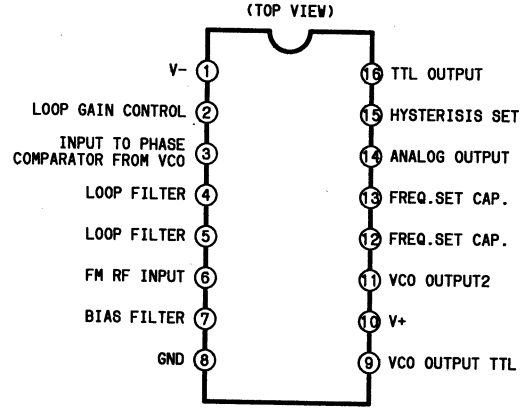

MSM5210RS (UP/DOWN COUNTER)

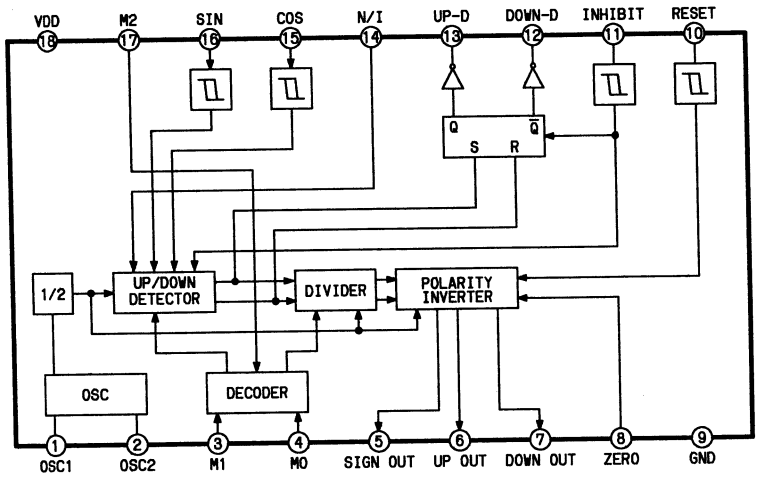

NJM1496
(BALANCED MODULATOR/DEMODULATOR)

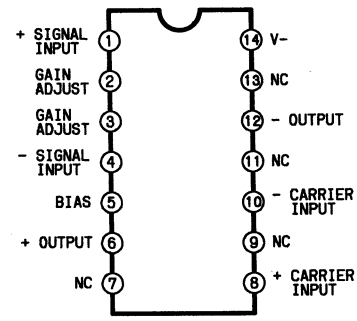

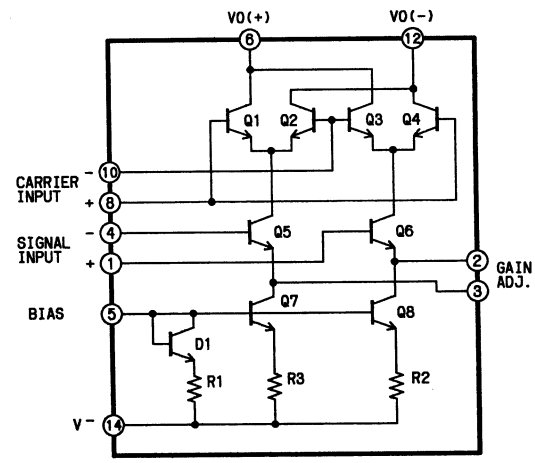

NJM2901
(QUAD VOLTAGE COMPARATOR)
(TOP VIEW)

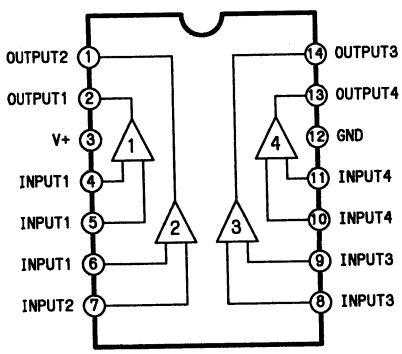

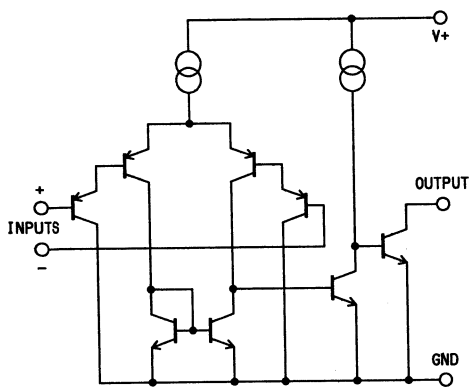

NJM082BM
(OPERATIONAL AMPLIFIER)

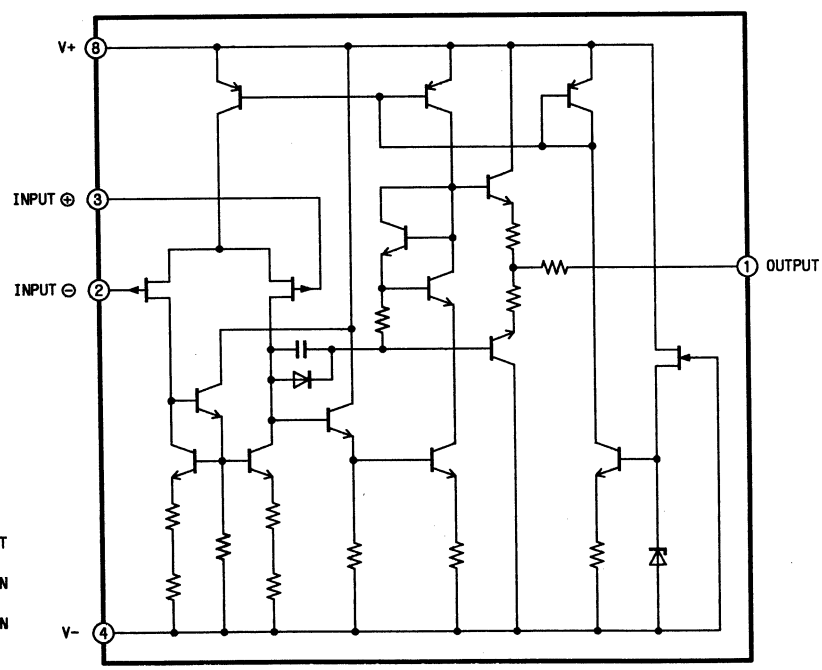

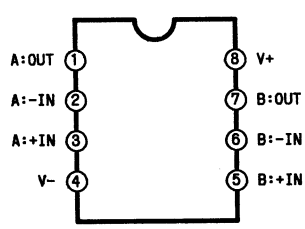

NJM4558
(OPERATIONAL AMPLIFIER)
(TOP VIEW)

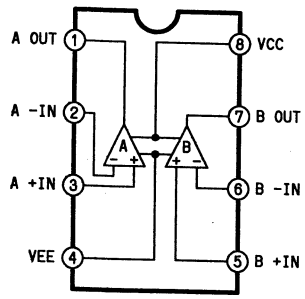

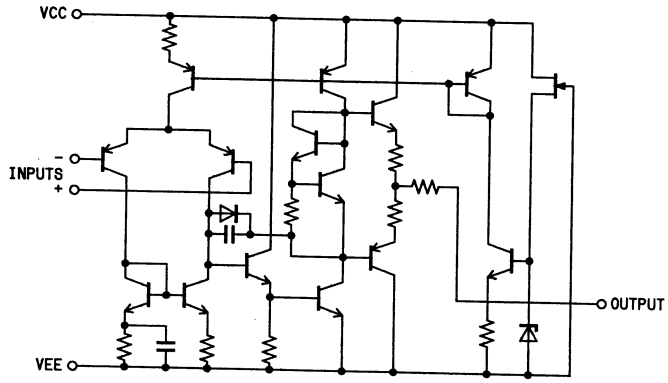

PEEL18CV8 (C-MOS EPROM)
(TOP VIEW)

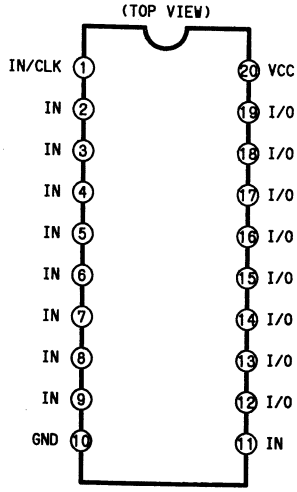

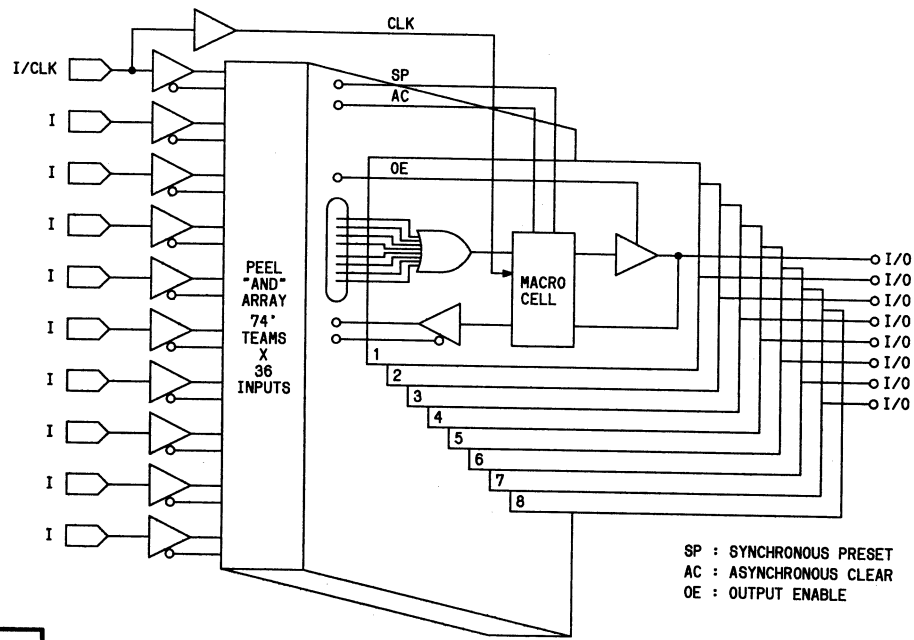

SP : SYNCHRONOUS PRESET
AC : ASYNCHRONOUS CLEAR
OE : OUTPUT ENABLE

NJM5532
(2 CIRCUIT LOW NOISE AMP)
(TOP VIEW)

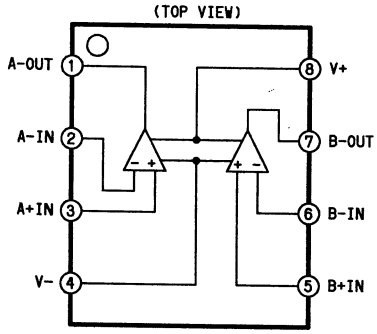

PU4124
(POWER AMP)

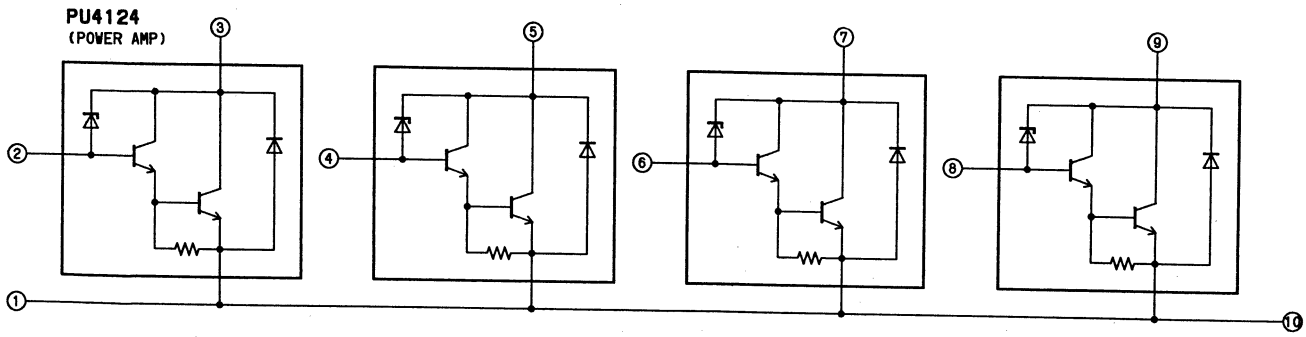

PEEL22CV10 (C-MOS EPROM)

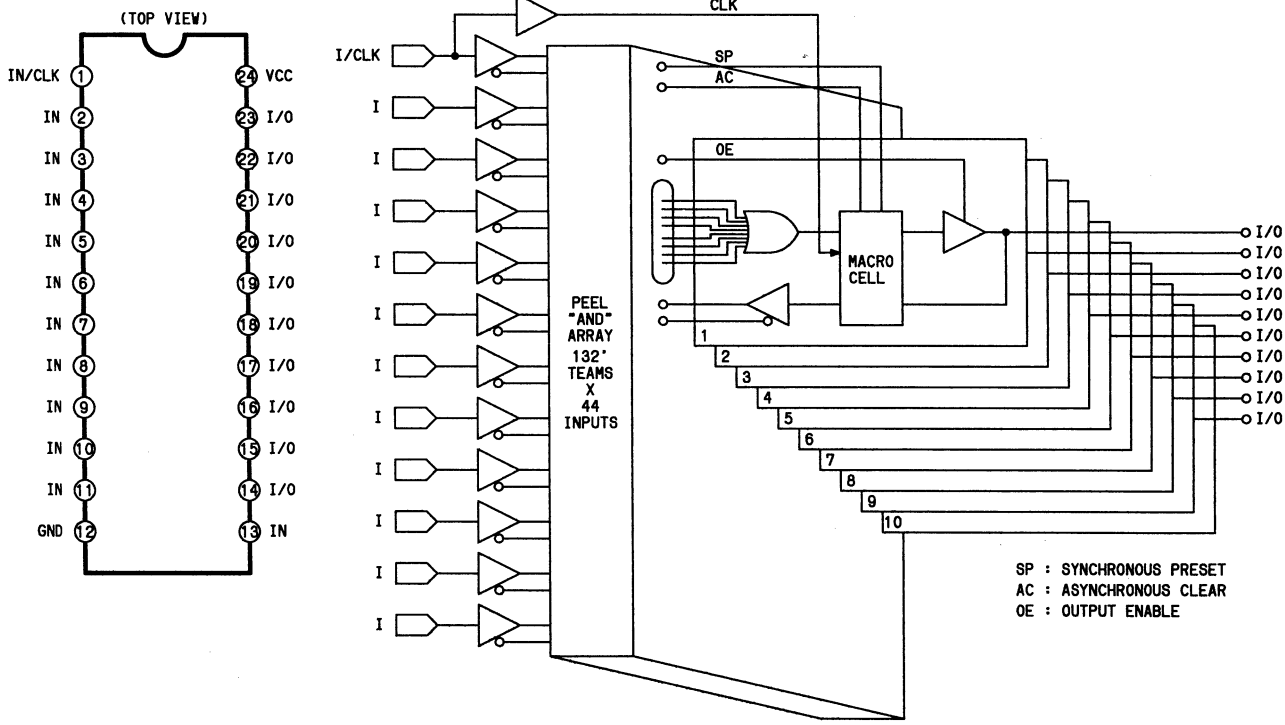

RC4560MD

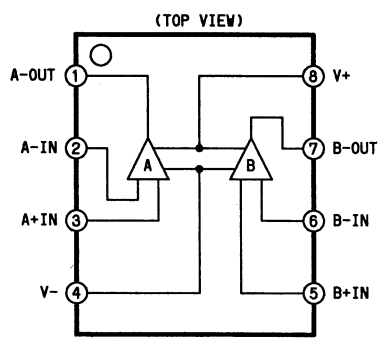

S-80230AG
(C-MOS VOLTAGE REGULATOR)

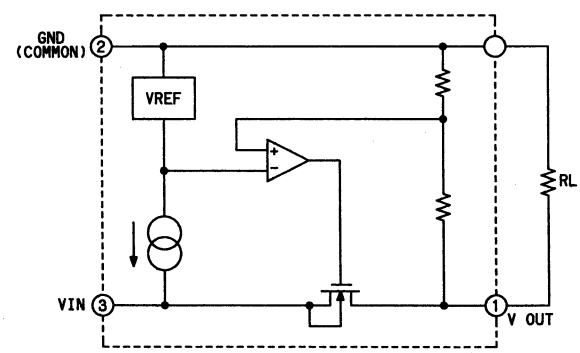

S81250HG
(C-MOS VOLTAGE REGULATOR)

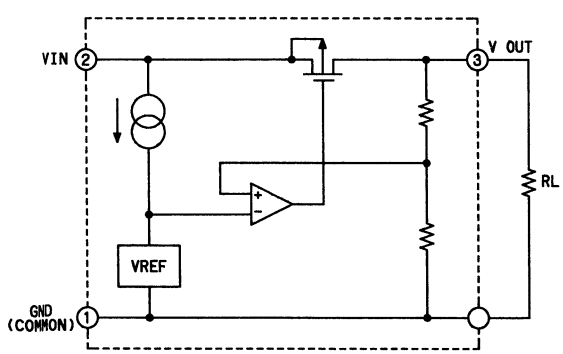

SN75158

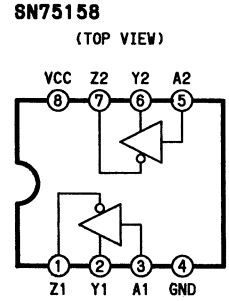

SN75160 (GPI INTERFACE)

(TOP VIEW)

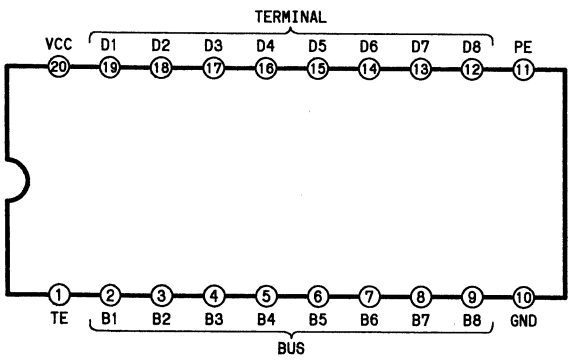

SN75161 (GPI INTERFACE)

(TOP VIEW)

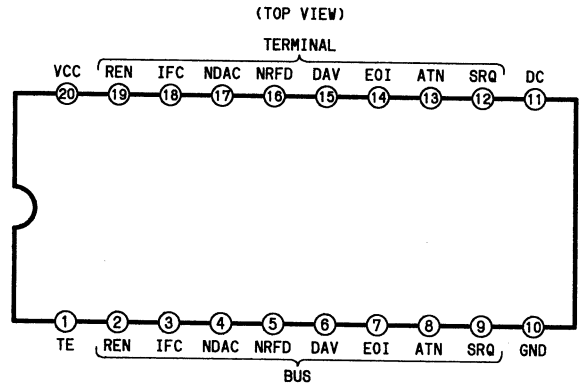

(FUNCTION TABLES)

DRIVERS

INPUTS			OUTPUT
D	TE	PE	B
H	H	H	H
L	H	H	L
H	X	L	F
L	H	L	L
X	L	X	F

RECEIVERS

INPUTS			OUTPUT
B	TE	PE	D
L	L	X	L
H	L	X	H
X	H	X	Z

TA7712

(MOTOR CONTROL IC)

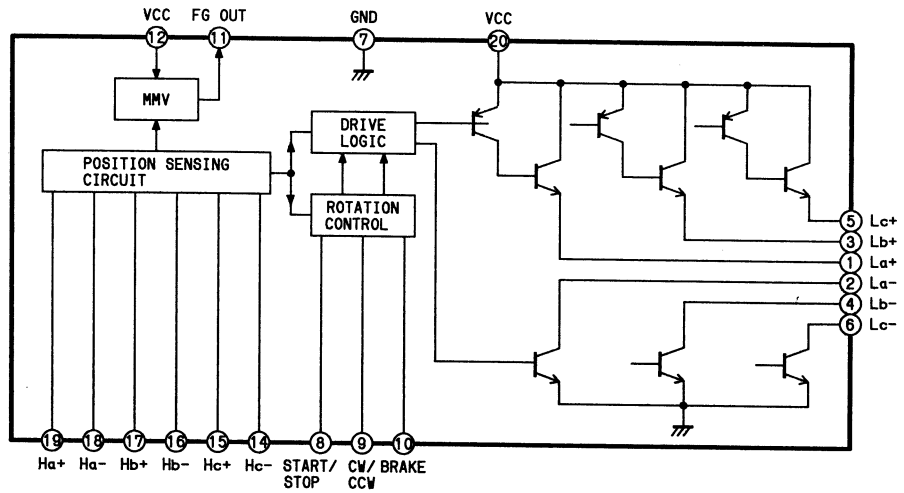

TC4S584F

(SCHMITT TRIGGER)

(TOP VIEW)

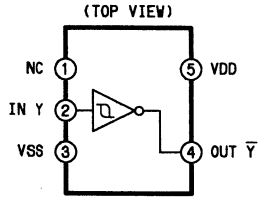

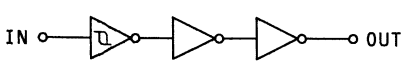

TC9122P

(HIGH SPEED BCD PROGRAMMABLE COUNTER)

(TOP VIEW)

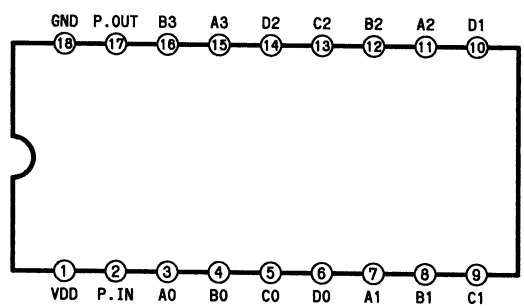

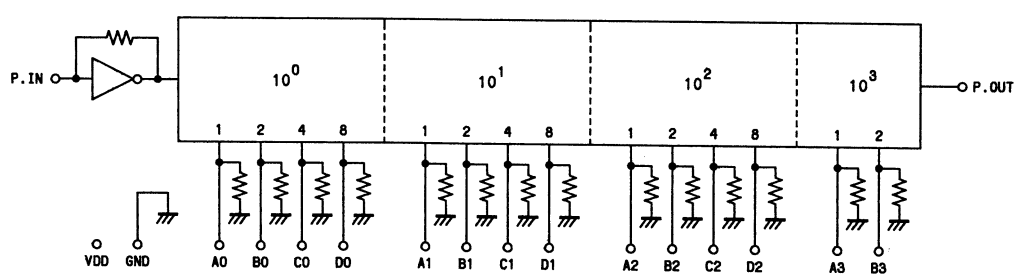

TDC1038
(MONOLITHIC VIDEO A/D CONVERTER)

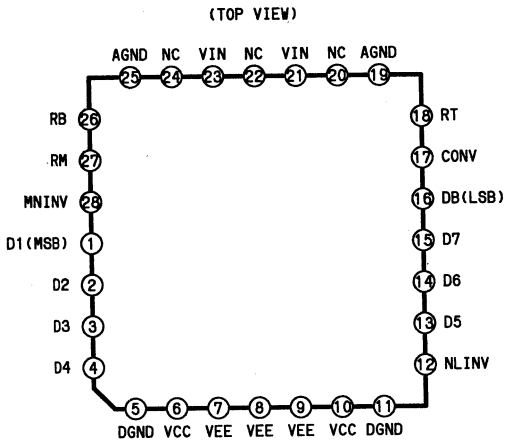

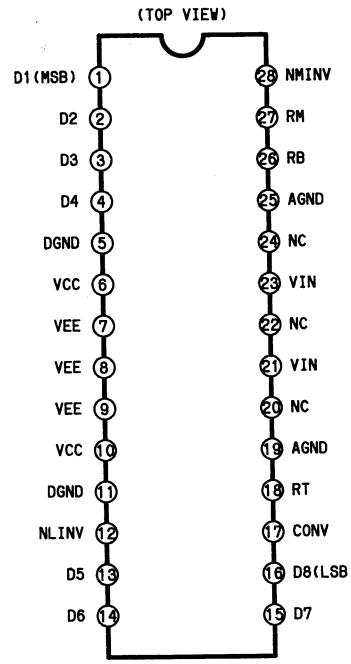

TL082
(OPERATIONAL AMPLIFIER)
(TOP VIEW)

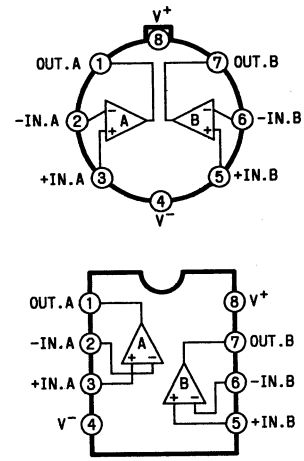

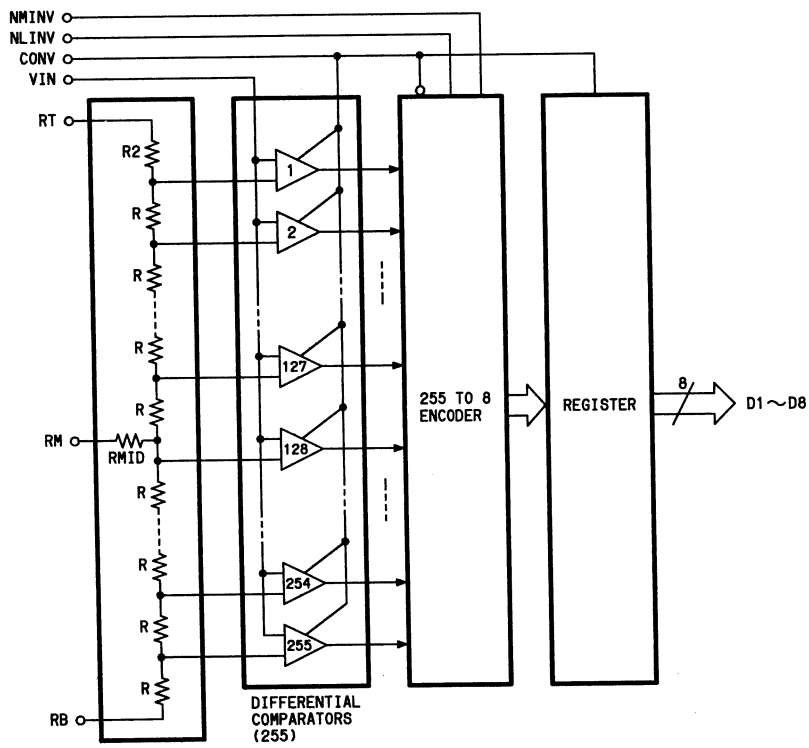

TL084
(OPERATIONAL AMPLIFIER)
(TOP VIEW)

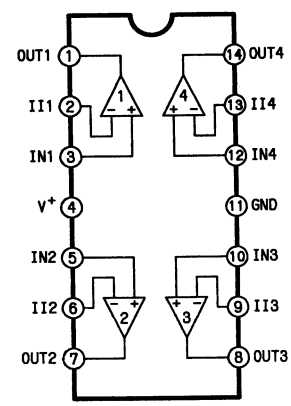

TL431
(ADJUSTABLE PRECISION SHUNT REGULATOR)

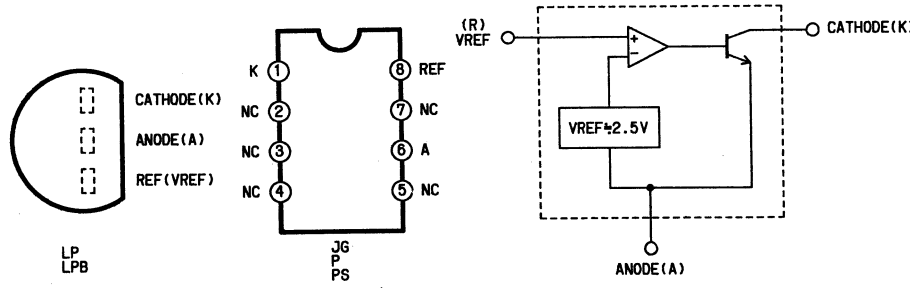

TL1451CNS
(DUAL SWITCHING REGULATOR CONTROLLER)

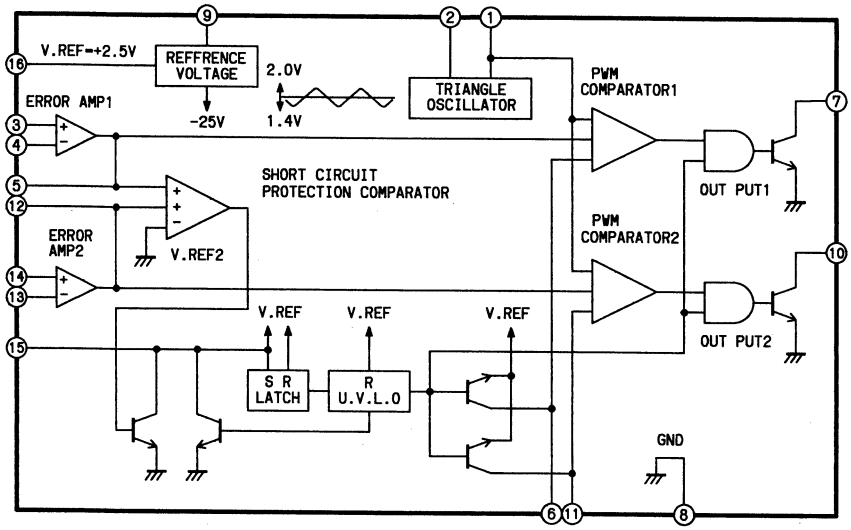

UPC319
(DUAL COMPARATOR)
(TOP VIEW)

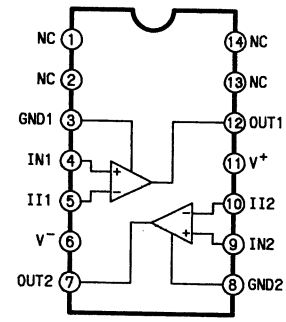

TL7705
(SUPPLY VOLTAGE SUPERVISOR CIRCUIT)

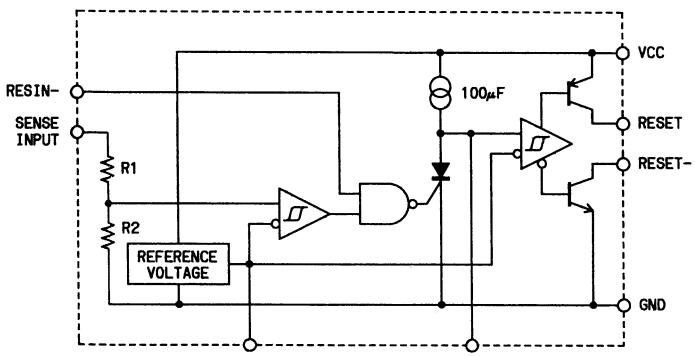

μPA1453H
(POWER TRANSISTOR ARRAY)

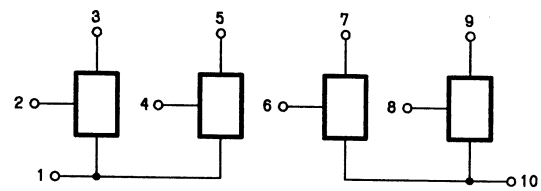

BASE:2.4.6.8
COLLECTOR:3.5.7.9
EMITER:1.10

TMPZ84C43AF6
(SERIAL INPUT/OUTPUT CONTROLLER)

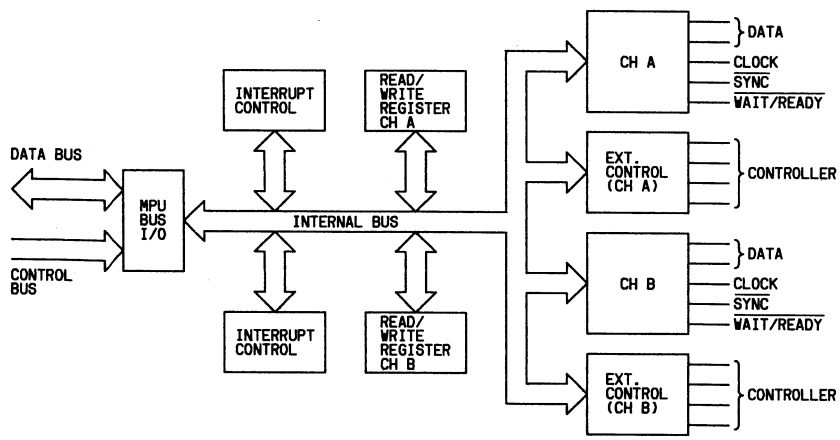

UPC339
(OPERATIONAL AMPLIFIER)
(TOP VIEW)

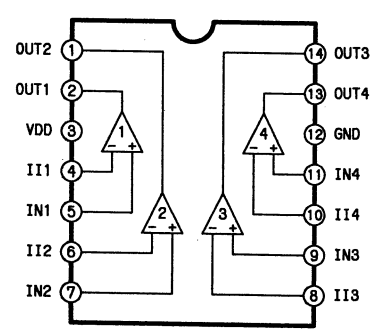

TMS4C1060 (CONCEALMENT CONTROL)
(262,144 WORDS×4BIT-FIELD-MEMORY)

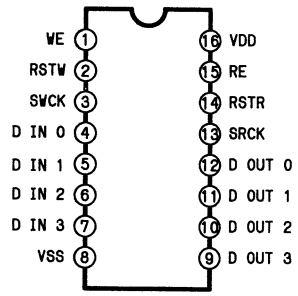

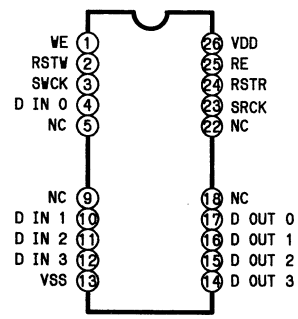

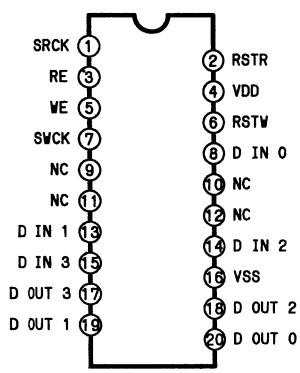

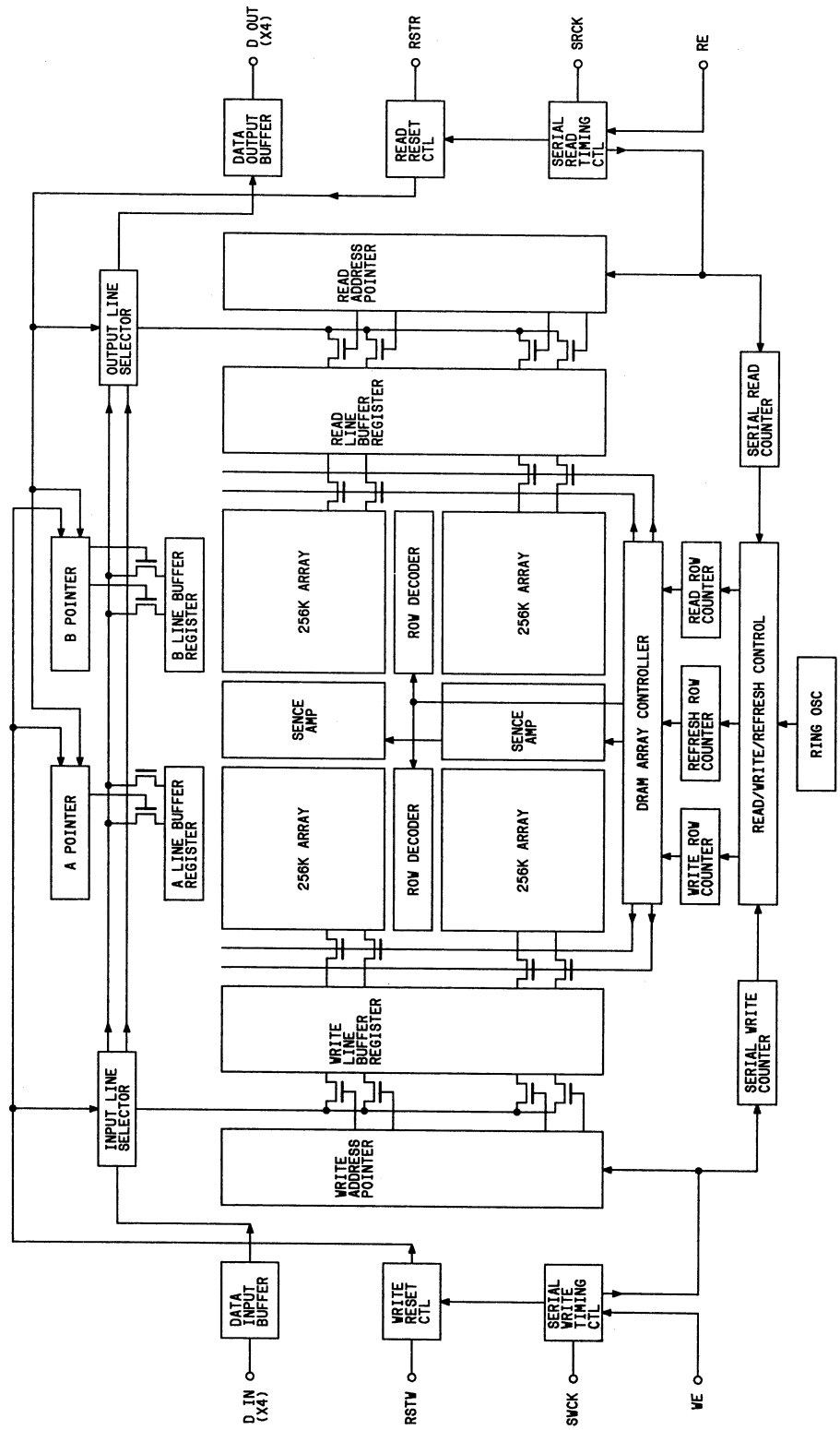

μPC1663

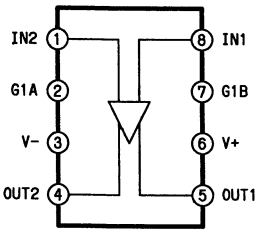

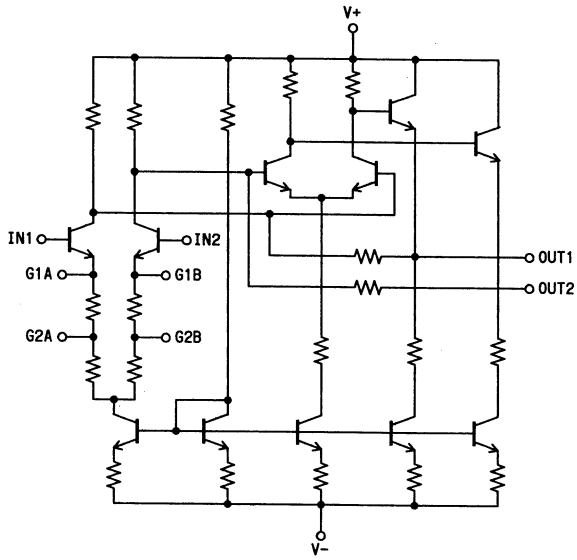

UPC393

(DUAL SINGLE-SUPPLY OPERATIONAL AMPLIFIER)

(TOP VIEW)

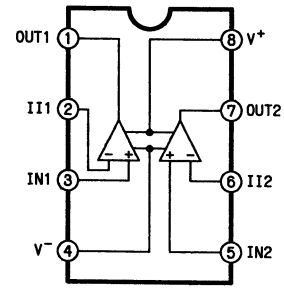

UPC451

(HIGH PERFORMANCE QUADRUPLE OPERATIONAL AMPLIFIER)

(TOP VIEW)

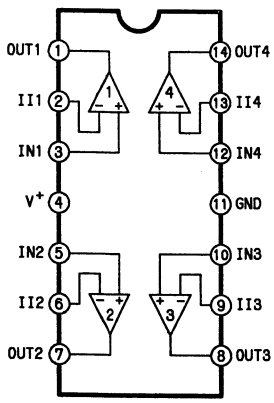

UPC4741

(OPERATIONAL AMPLIFIER)

(TOP VIEW)

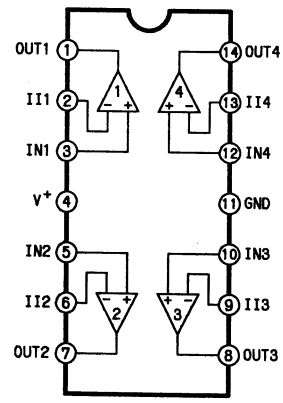

μPC4074

(TOP VIEW)

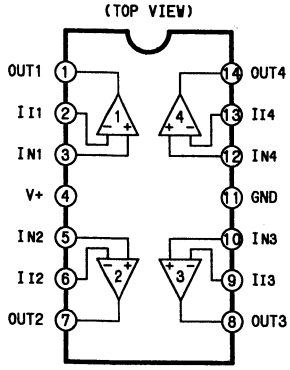

EQUIVALENT CIRCUIT (1/4)

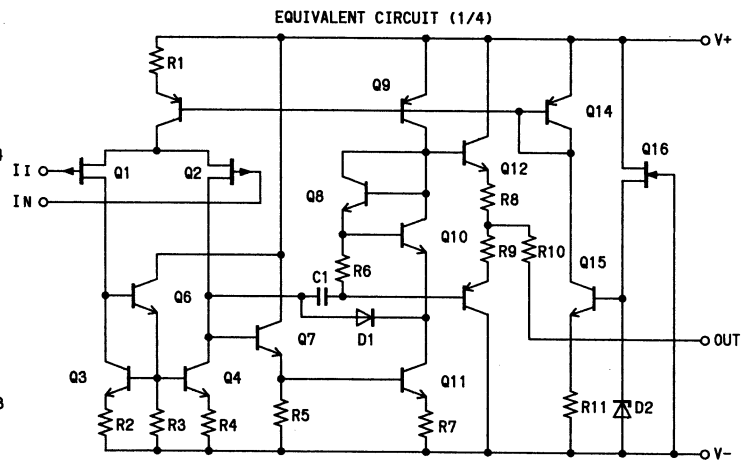

UPC4572

(4 INVERTERS PLUS 2-INPUT NOR GATE PLUS 2-INPUT NAND GATE)

(TOP VIEW)

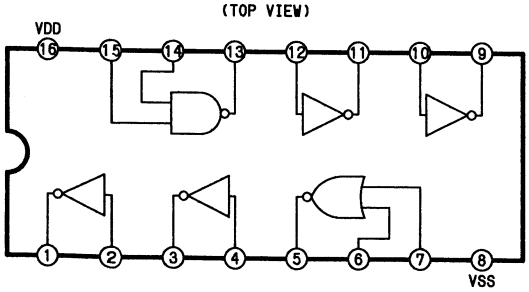

UPC4558

(OPERATIONAL AMPLIFIER)

(TOP VIEW)

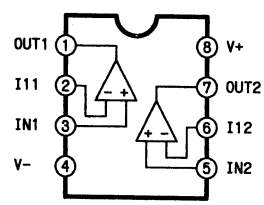

UPC4082

(OPERATIONAL AMPLIFIER)

(TOP VIEW)

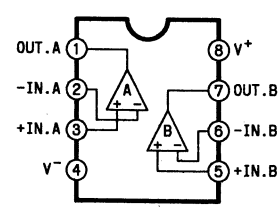

μPC494G
(SWITCHING REGULATOR CONTROL)

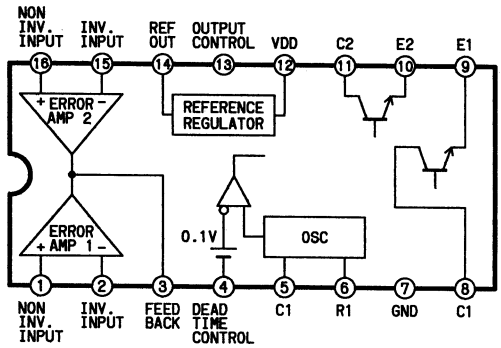

μPC624C
(18-PIN HERMETIC DIP)

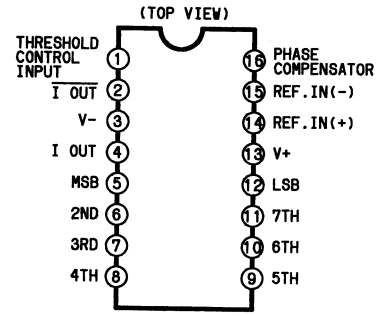

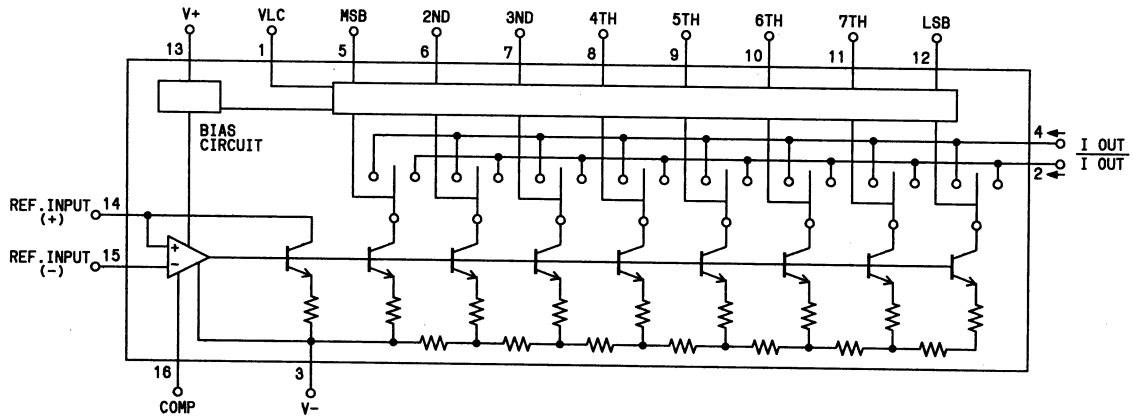

μPD42101G (FIFO 1H DELAY)

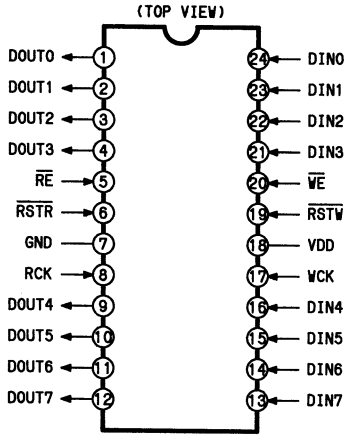

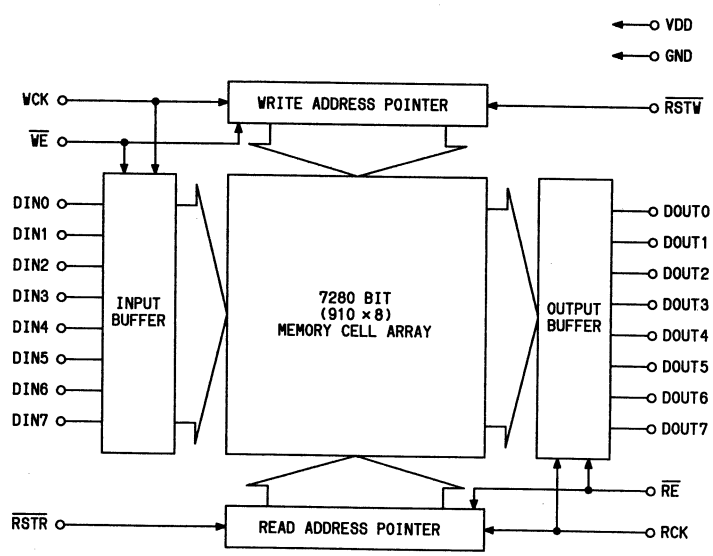

μPD421026 (FIFO 1H DELAY)

(TOP VIEW)

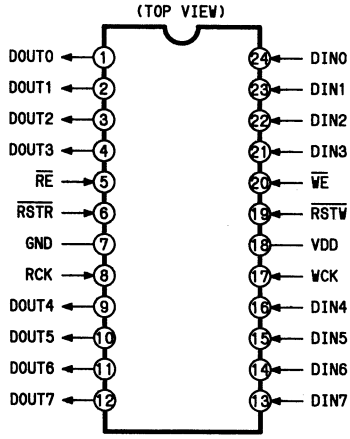

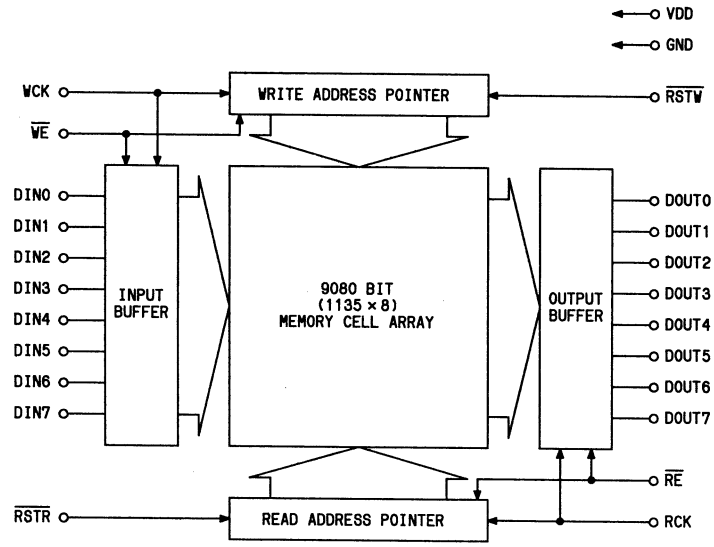

μPD42505C-50
(HIGH SPEED LINE BUFFER)

(TOP VIEW)

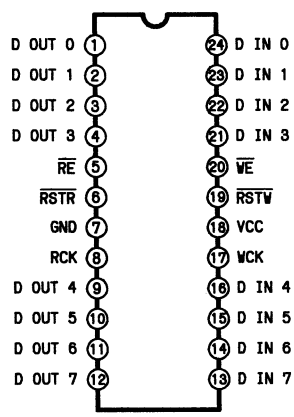

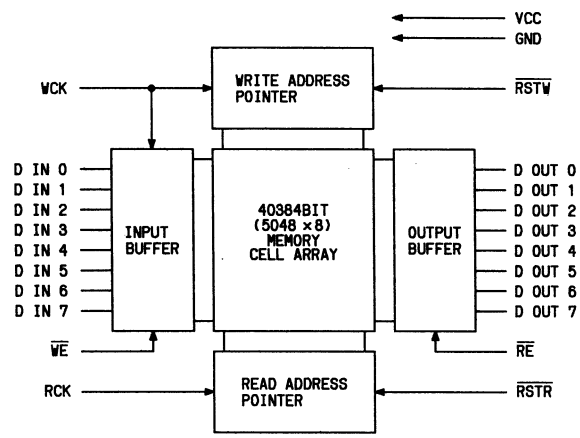

UPD65022G046 (B.P.F)

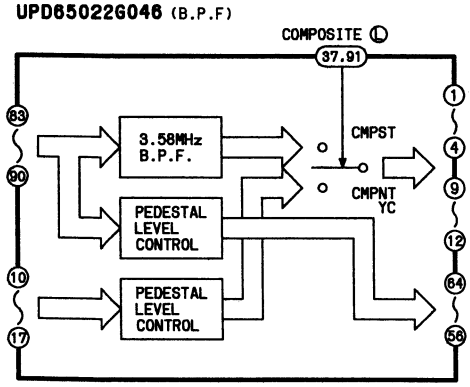

μPD65042G024 (Y/C SEPARATION)
(SEMI-CUSTOM LSI)

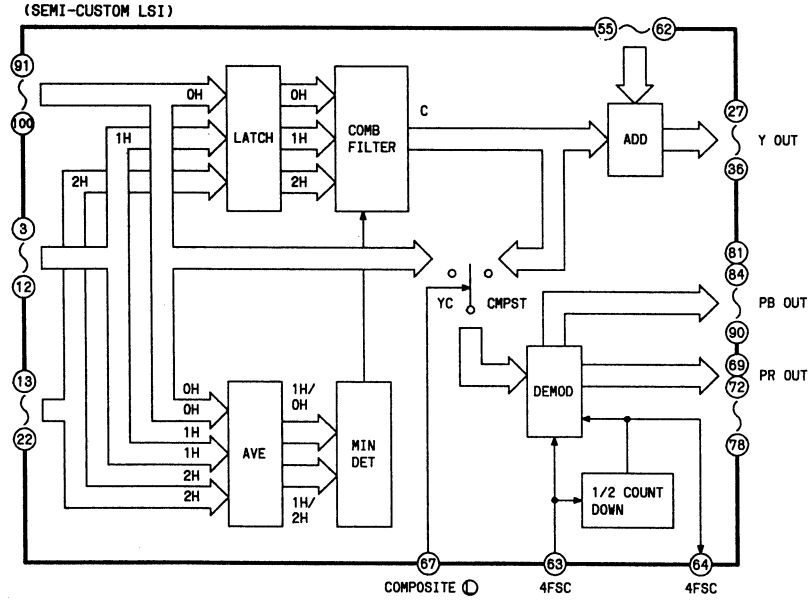

μPD65013F101 (1H/2H DELAY FOR Y/C SEPA)

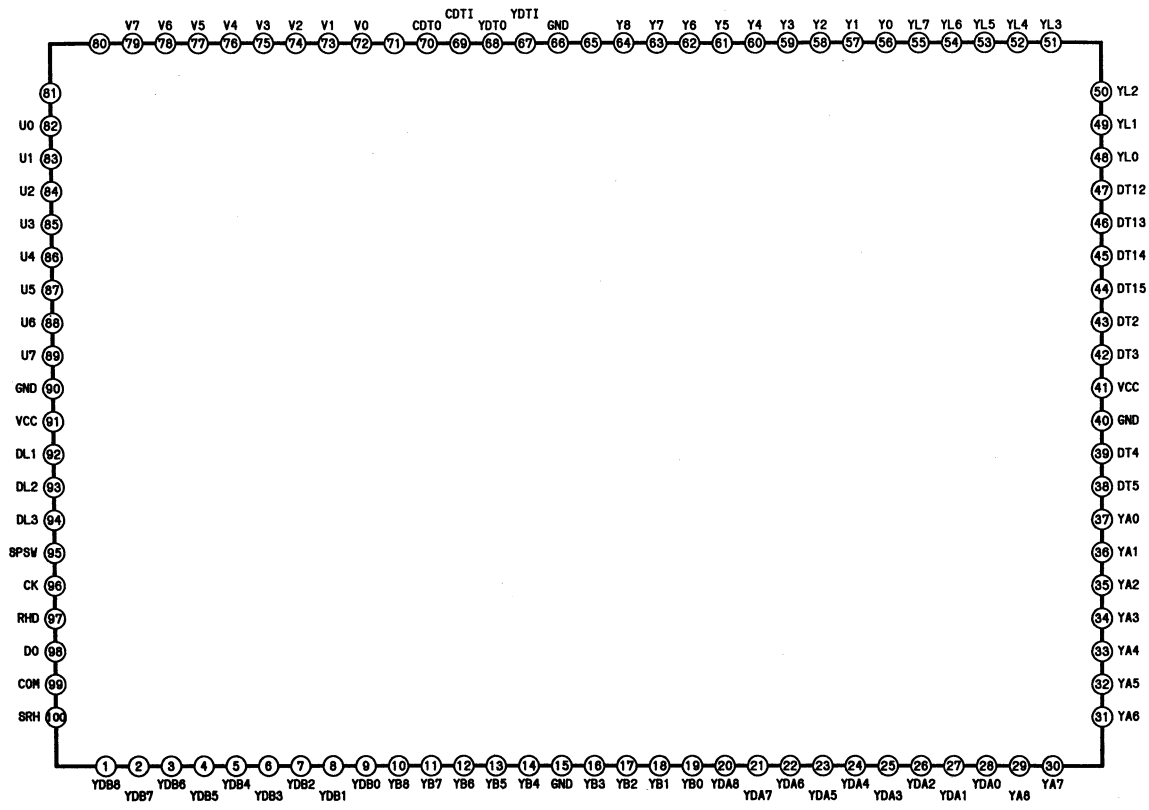

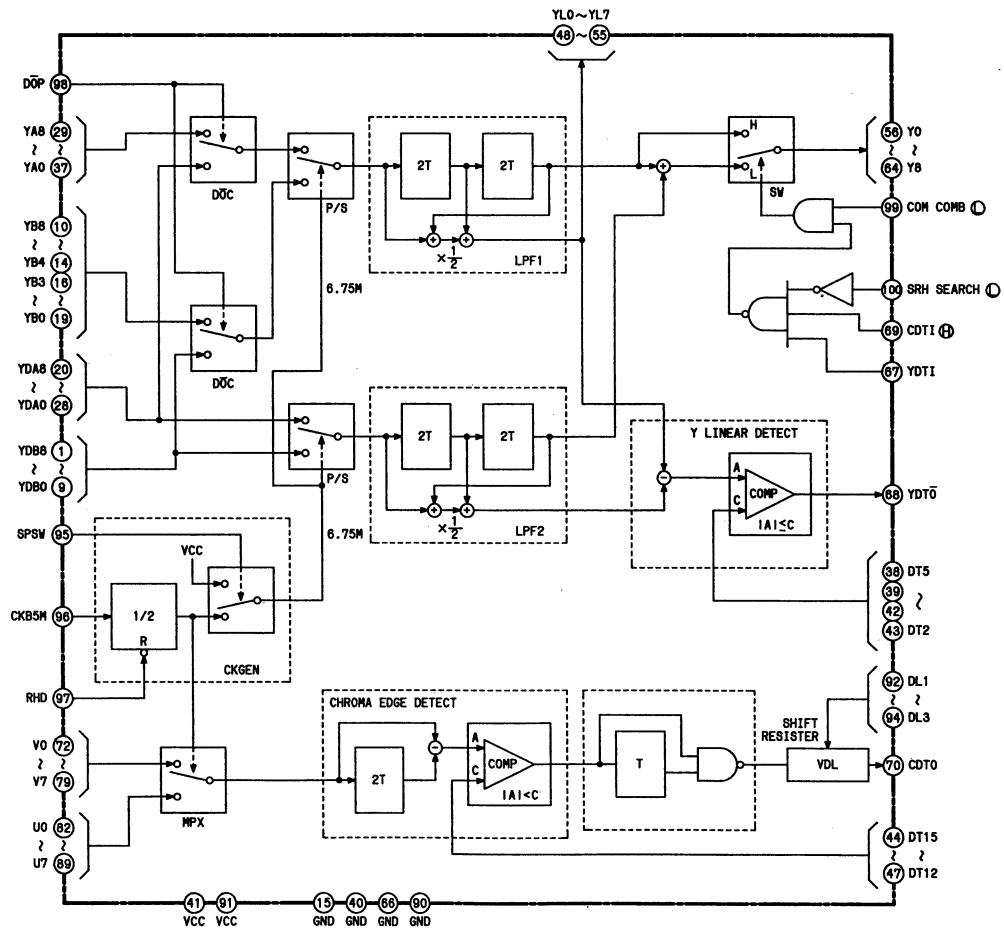

μPD65022F210 (C-MOS GATE ARRAY)

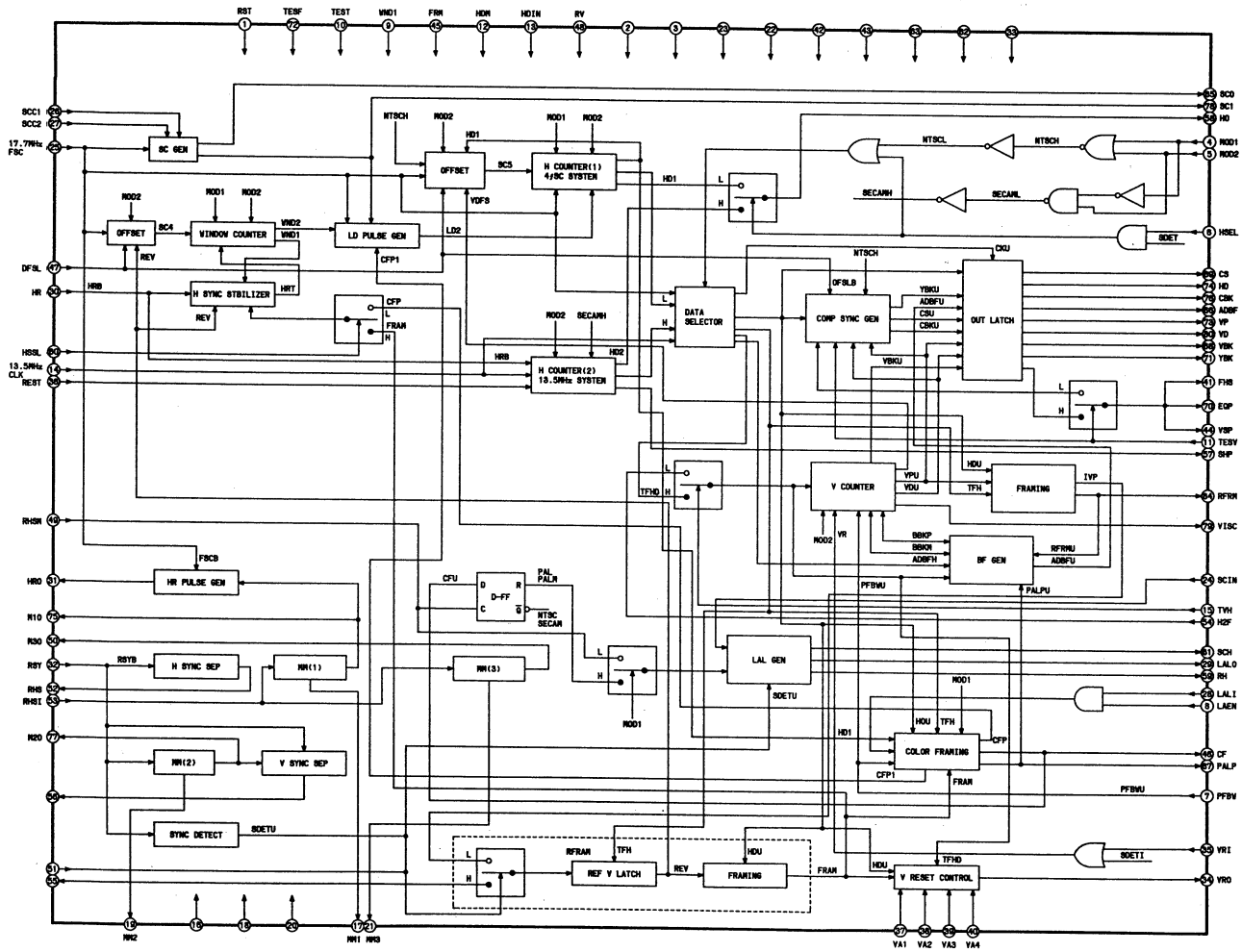

PIN NO.	SYMBOL	I/O	DESCRIPTIONS	PIN NO.	SYMBOL	I/O	DESCRIPTIONS
1	RST	I	TEST TERMINAL	41	FHS	I/O	H SYNC OUT(fH)
2	VDD	—	VDD 5V	42	VDD	—	VDD 5V
3	GND	—	GND	43	GND	—	GND
4	MOD1	I	TV MODE SELECT(SHOWN IN TABLE1)	44	YSP	I/O	V SERRATION PULSE(2fH)
5	MOD2	I	TV MODE SELECT(SHOWN IN TABLE1)	45	FRM	I	TEST TERMINAL
6	HSEL	I	MAIN CLOCK SELECT(SHOWN IN TABLE2)	46	CF	O	CF SIGNAL OUTPUT
7	PFBW	I	PAL-CF RESET NTSC-V BLANKING WITH SELECT	47	DFSL	I	NTSC-YBK SELECT PAL-OFFSET
8	LAEN	I	LINE ALTERNATE PULSE ENABLE INPUT	48	RV	I	TEST TERMINAL
			HI-INABLE LO-UNINABLE	49	RHSM	I	LUTCH PULSE INPUT(FOR CF DET)
9	WND1	I	TEST TERMINAL	50	M30	O	MM3 OUT
10	TEST	I	TEST TERMINAL	51	SDET	O	REF SYNC (RSY)DETECT
11	TESV	I	TEST TERMINAL	52	RHB	O	REF H SIGNAL
12	HDM1	I	TEST TERMINAL	53	RHSI	I	REF H SYNC INPUT
13	HDIN	I	TEST TERMINAL	54	H2F	I	2fHD INPUT(TVH:LO ONLY)
14	CLK	I	13.5MHz CLOCK INPUT	55	RVS	I	V SYNC INPUT
15	TVH	I	V COUNTER CLOCK SELECT	56	RVSO	O	V SYNC SEPARATOR OUTPUT
			L-H2F EXT H-2fHD INT(er OPEN)	57	SHP	O	SAMPLE HOLD PULSE
16	GND	—	GND(FOR M.M.)	58	HO	O	SIGNAL FOR MAKING TRAPEZOID WAVE(fH)
17	MM1	I/O	CR CONNECTION FOR MM1	59	RH	O	DELAYED "RHSM" PULSE(FOR PAL CF)
18	GND	—	GND(FOR M.M.)	60	HSSL	I	H SYNC STABILITY CIRCUIT SENSITIVITY SELECT
19	MM2	I/O	CR CONNECTION FOR MM2				L(er OPEN)-STABILITY:MAX.RESPONCE:LOW
20	GND	—	GND(FOR M.M.)				H-STABILITY:MIN.RESPONCE:HIGH
21	MM3	I/O	CR CONNECTION FOR MM3	61	SCH	O	CF DET MALFUNCTION PREVENTION PULSE
22	GND	—	GND				HI-NOR.LO-MAL
23	VDD	—	VDD 5V	62	GND	—	GND
24	SCIN	I	SUB CARRIER INPUT	63	VDD	—	VDD 5V
25	FSC	I	4fsc CLOCK INPUT	64	RFRM	O	FRAMING SIGNAL HI-ODD,LO-EVEN
26	SCC1	I	SC1 PHASE CONTROL INPUT	65	SCO	O	SUB CARRIER OUT
27	SCC2	I	SC1 PHASE CONTROL INPUT	66	ADRM	O	ADVANCED BURST FLAG(fH)
28	LALI	I	LINE ALTERNATE PULSE INPUT	67	PALP	O	PAL PALSE OUTPUT(fH/2)
			NTSC-CF RESET PAL-PAL PULSE RESET	68	YBK	O	V BLANKING SIGNAL
29	LALO	I	LINE ALTERNATE PULSE INPUT	69	CS	O	COMPOSITE SYNCHRONIZING SIGNAL
30	HR	I	H COUNTER RESET(4fsc)INPUT	70	EQP	I/O	EQUALIZING PULSE(2fH)
31	HRO	O	H COUNTER RESET(4fsc)OUTPUT	71	YBK	O	B/W CONTROL PULSE
32	RSY	I	REFERENCE SYNC INPUT	72	TESF	I	TEST TERMINAL
33	GND	—	GND	73	VP	O	VP PULSE
34	VRO	O	V COUNTER RESET OUTPUT	74	HD	O	HD PULSE(2fH)
35	VRI	I	V COUNTER RESET INPUT	75	M10	O	MM1 OUT
36	REST	I	H COUNTER RESET(13.5MHz)	76	CBK	O	COMPOSITE SYNCHRONIZING SIGNAL
37	VA1	I	V RESET OUTPUT PHASE SELECT	77	M20	O	MM2 OUT
38	VA2	I	V RESET OUTPUT PHASE SELECT	78	SC1	O	SUB CARRIER OUT
39	VA3	I	V RESET OUTPUT PHASE SELECT	79	VISC	O	VISC GATE PULSE
40	VA4	I	V RESET OUTPUT PHASE SELECT	80	VD	O	VD PULSE

MOD1	MOD2	TV SYSTEM
0	0	NTSC
0	1	SECAM
1	0	PALN
1	1	PAL

"0" ··· GND
"1" ··· VDD

TABLE1

MODE	SDET	HSEL	CLOCK SIGNAL
NTSC	0	X	SYNC ··· FSC HO ··· FSC
	1	0	
	1	1	SYNC ··· FSC HO ··· HR
PAL	0	X	SYNC ··· CLK HO ··· FSC
	1	0	
	1	1	SYNC ··· CLK HO ··· HR

"X" IS DON'T CARE
HO ··· HO RISING POSITION

TABLE2

VA4	VA3	VA2	VA1	V PHASE
0	0	0	0	0H
0	0	0	1	+1H
0	0	1	0	+2H
0	0	1	1	+3H
0	1	0	0	+4H
0	1	0	1	+5H
0	1	1	0	+6H
0	1	1	1	+8H
1	0	0	0	+10H
1	0	0	1	+12H
1	0	1	0	+14H
1	0	1	1	+16H
1	1	0	0	−4H
1	1	0	1	−3H
1	1	1	0	−2H
1	1	1	1	−1H

VRO AND VRI ··· CONNECTION
V PHASE REF ··· RSY
"+" ··· ADV "−" ··· DELAY

TABLE3

μPD65061GF032 (MEMORY CONTROL)

(TOP VIEW)

PIN NO.	PIN NAME	PIN NO.	PIN NAME	PIN NO.	PIN NAME	PIN NO.	PIN NAME
1	GND	26	COUN	51	M1WN	76	A116
2	VDD	27	A00	52	VDD	77	N.C.
3	PAL	28	GND	53	GND	78	TEST
4	LINR	29	VDD	54	A10	79	VDD
5	A016	30	MOWN	55	C1UN	80	GND
6	A015	31	FSC2	56	C1LN	81	M1RN
7	A014	32	$\overline{\text{O}}$STN	57	A11	82	ADLD
8	A012	33	FSTN	58	A110	83	$\overline{\text{O}}$CPA
9	WEON	34	DL$\overline{\text{O}}$	59	A12	84	SEG0
10	A07	35	DLI	60	$\overline{\text{O}}$E1N	85	SEG1
11	A013	36	EX0	61	GND	86	FLD0
12	GND	37	EX1	62	A13	87	FLD1
13	A06	38	EX2	63	A111	88	FLD2
14	A08	39	EX3	64	A14	89	CSI0
15	A05	40	GND	65	A19	90	CSI1
16	A09	41	EX4	66	A15	91	CSI2
17	A04	42	EX5	67	A18	92	CSI3
18	A011	43	EX6	68	A16	93	CS$\overline{\text{O}}$0
19	A03	44	EX7	69	GND	94	CS$\overline{\text{O}}$1
20	GND	45	EX8	70	A113	95	CS$\overline{\text{O}}$2
21	$\overline{\text{O}}$EON	46	EX9	71	A17	96	CS$\overline{\text{O}}$3
22	A02	47	EX10	72	WE1N	97	CHON
23	A010	48	EX11	73	A112	98	INTN
24	A01	49	EX12	74	A114	99	WCLK
25	COLN	50	EX13	75	A115	100	MORN

UPD71055G
(PARALLEL INTERFACE UNIT)

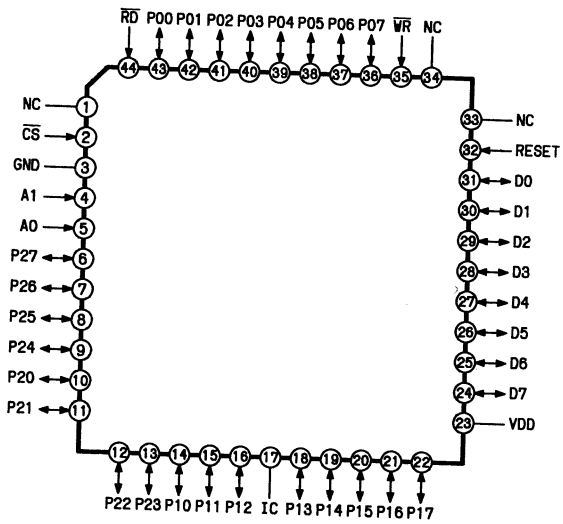

UPD71054G
(PROGRAMMABLE TIMER COUNTER)

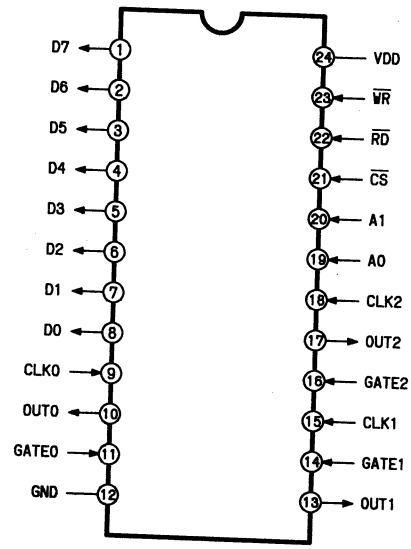

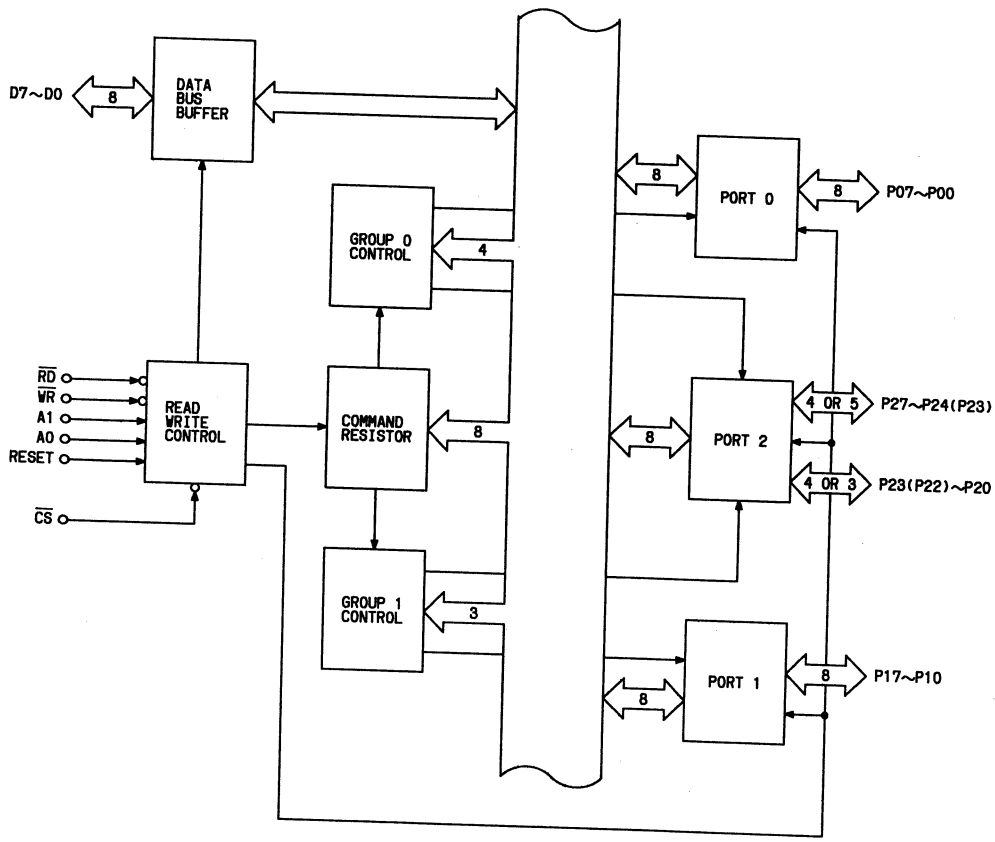

UPD7503G
(4-BIT MICRO COMPUTER)

(TOP VIEW)

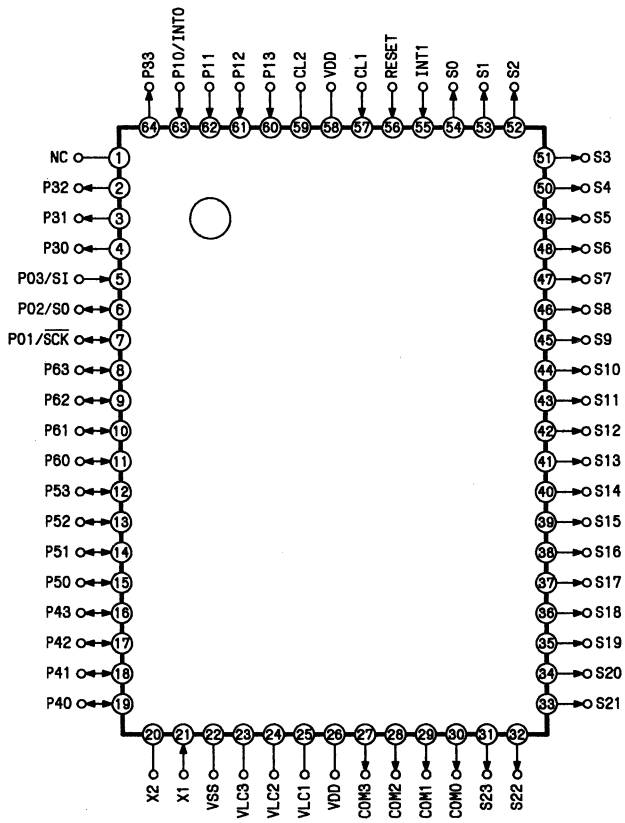

74163
(SYNCHRONOUS PRESETTABLE BINARY COUNTER WITH CLEAR)

(TOP VIEW)

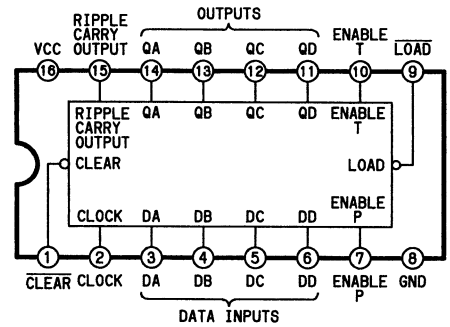

FUNCTION TABLE

INPUT					OUTPUT		
CLEAR	LOAD	CK	ENABLE P	ENABLE T	QA QB QC QD	RIPPLE CARRY	FUNCTION
H	H		H	H	————	—	COUNT
H	L	⌐⌐	X	X	DA DB DC DD	—	DATA SET
L	X		X	X	L L L L	—	CLEAR
X	X	X	X	H	H H H H	⌐H⌐	—

H:HIGH L:LOW X:H or L
n:A∼D

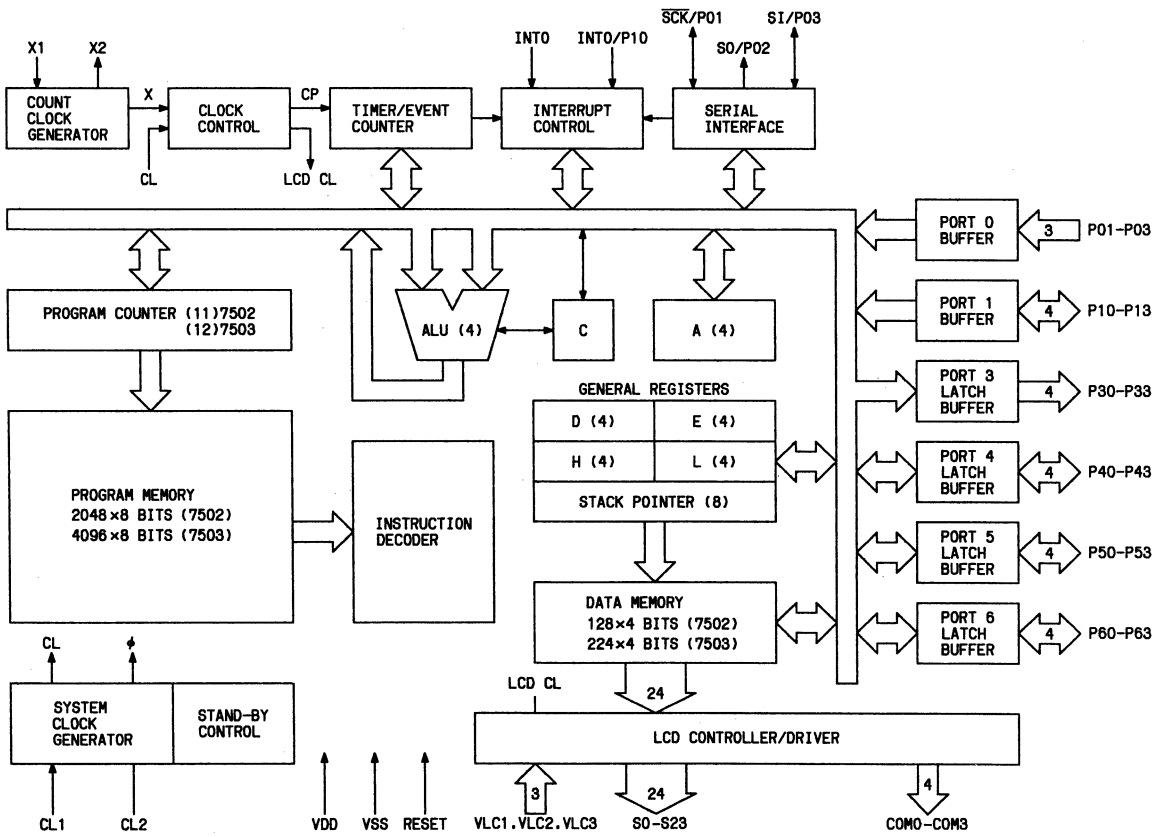

UPD78C10G
(8-BIT MICRO COMPUTER)

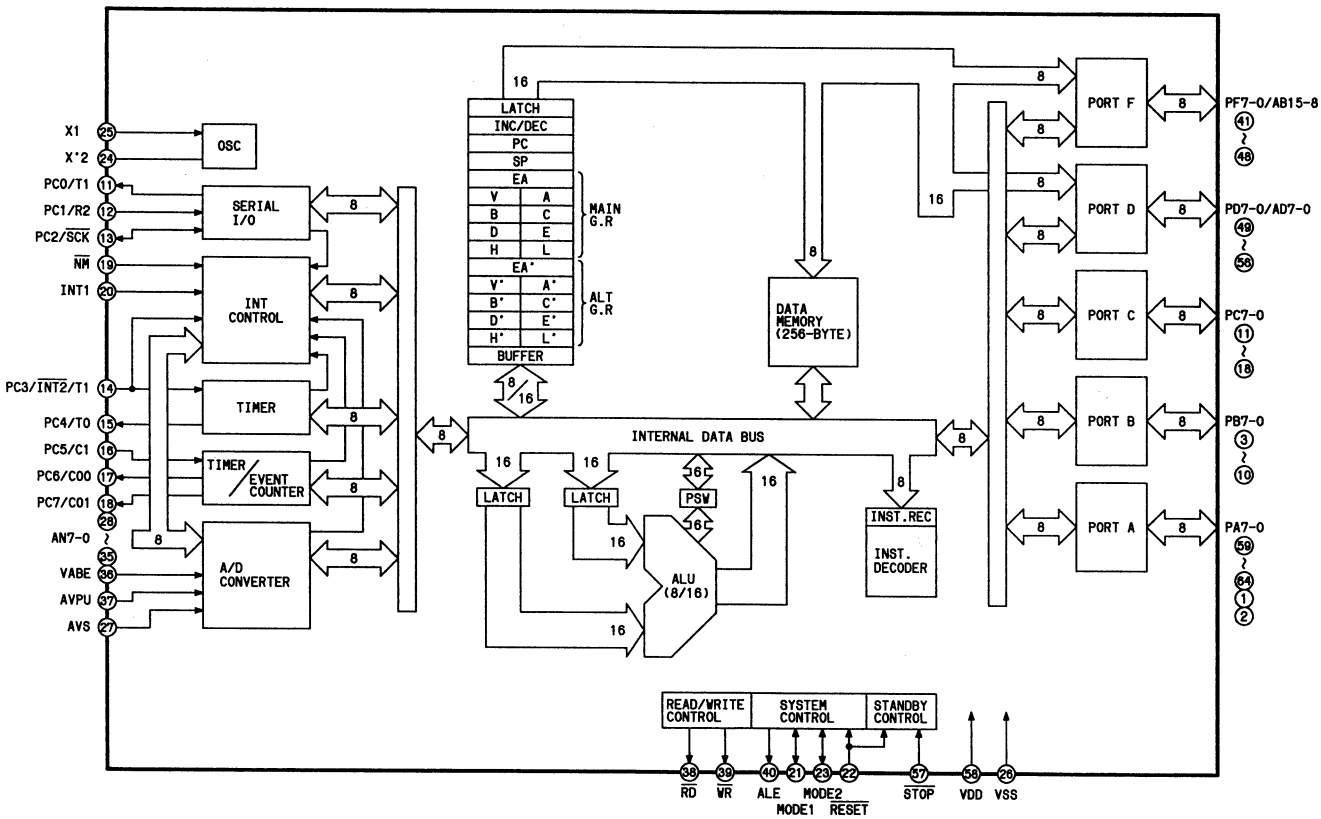

VCR0111
(DRIVE AMPLIFIER)

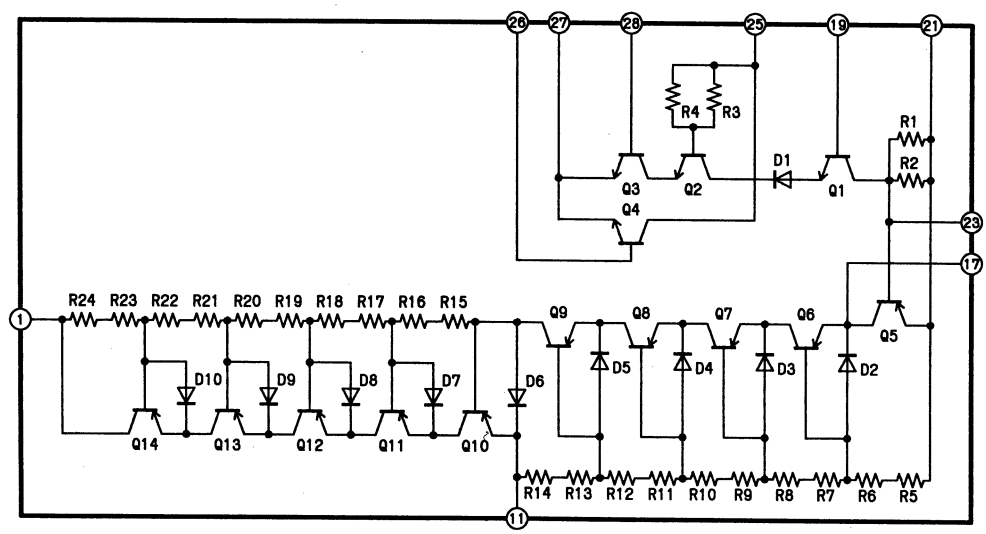

CY7C136-35
(MEMORY IC)

(TOP VIEW)

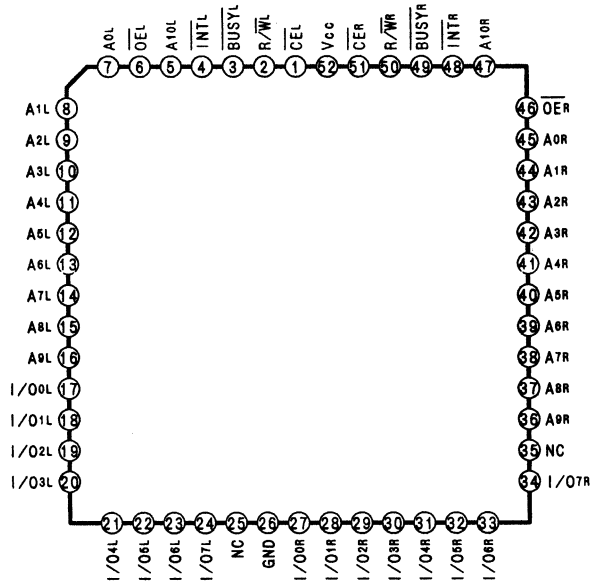

(BLOCK DIAGRAM)

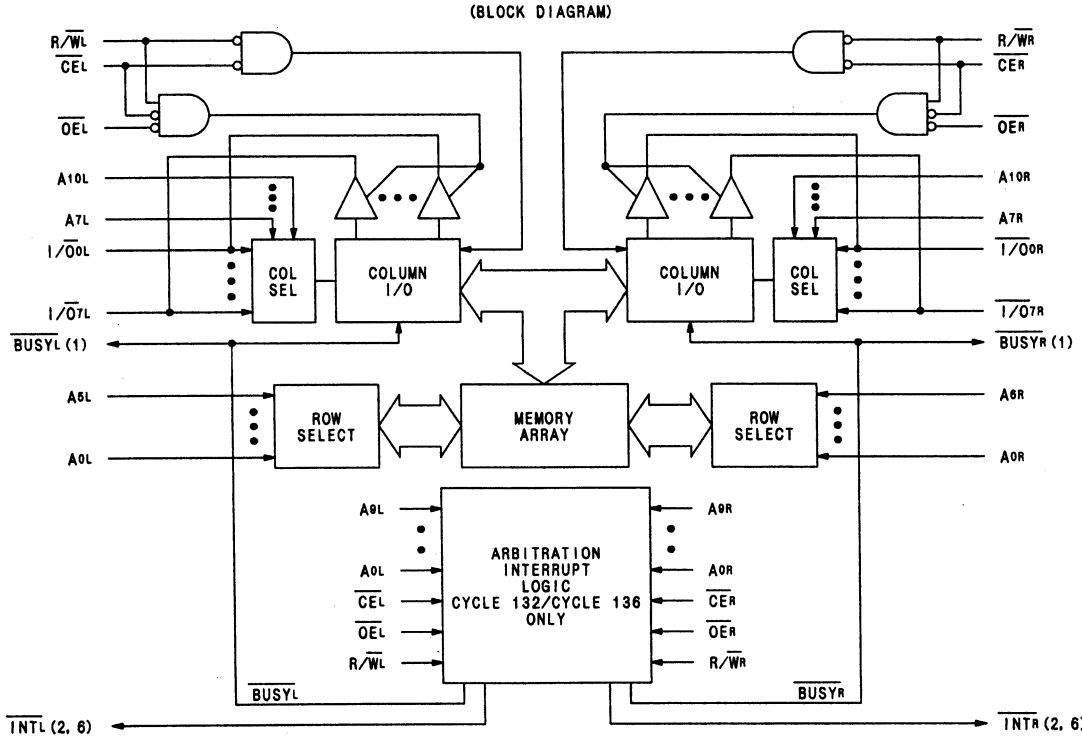

AK27CX642
27CX642
(C MOS EPROM)

(TOP VIEW)

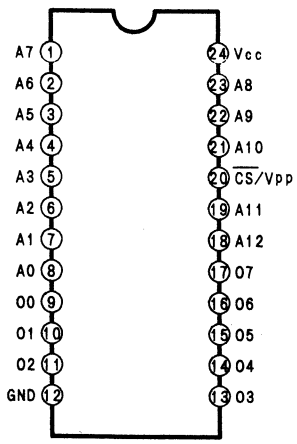

(BLOCK DIAGRAM)

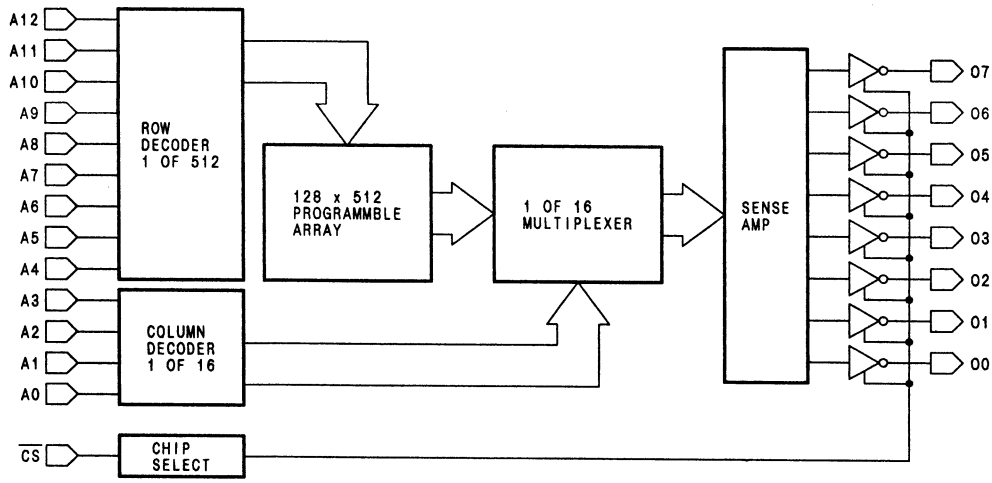

SN74S1051NS
(DIODE ARRAY)

(TOP VIEW)

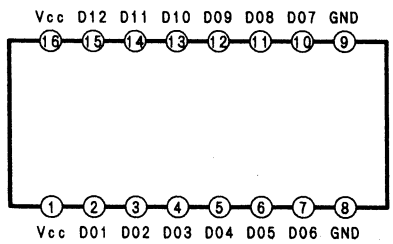

(BLOCK DIAGRAM)

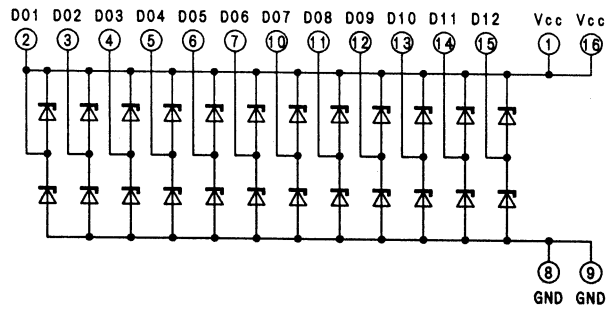

μPD27C2001
(MEMORY IC)

(TOP VIEW)

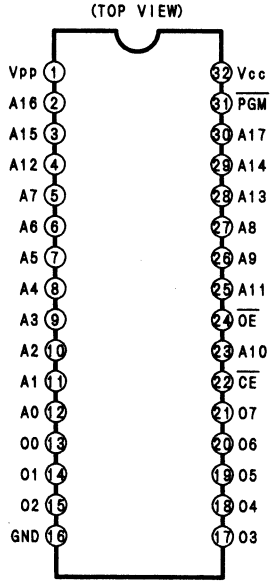

(BLOCK DIAGRAM)

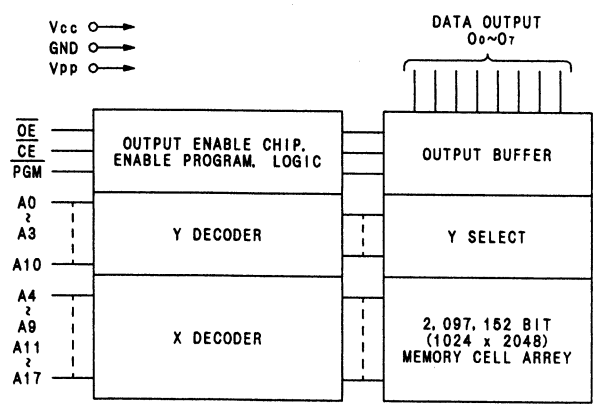

74573
(OCTAL 3 STATE D-LATCHES)

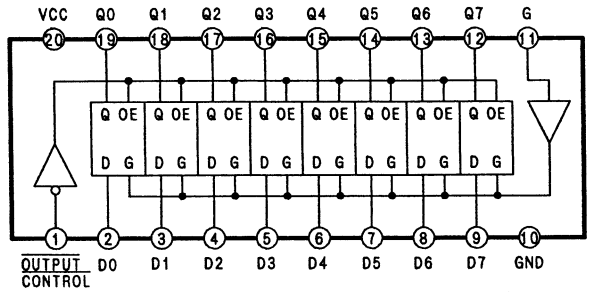

INPUT		FUNCTION
OUTPUT CONTROL	LATCH ENABLE	
L	L	LATCH (HOLD)
L	H	Q=D
H	X	HIGH-Z

74629
(DUAL VCO)

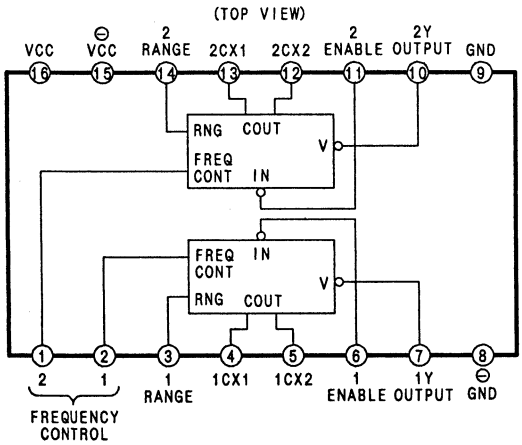

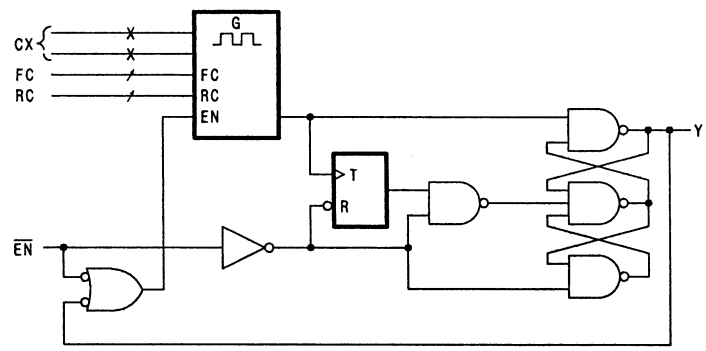

74674
(16 BIT SHIFT REGISTER)

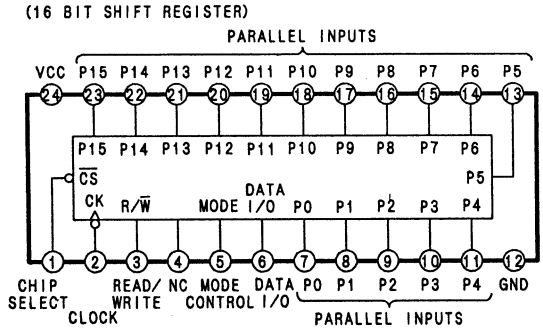

FUNCTION TABLE

INPUTS				I/O PORT	OPERATION
$\overline{CS}$	R/$\overline{W}$	MODE	CLOCK		
H	X	X	X	Z	DO NOTHING
L	L	X	↓	Z	SHIFT AND WRITE (SERIAL LOAD)
L	H	L	↓	Q14N	SHIFT AND READ
L	H	H	↓	P15	PARALLEL LOAD

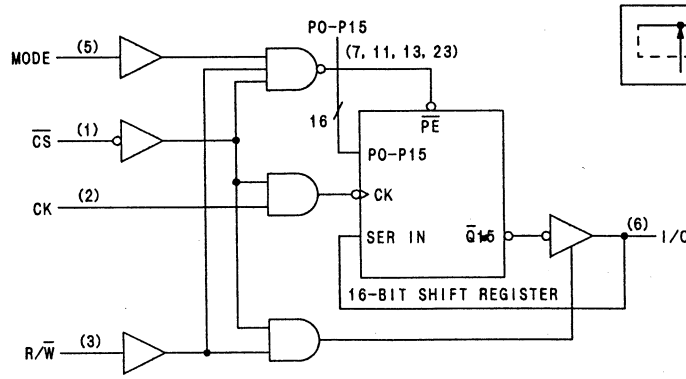

74688
(8 BIT EQUAL-TO COMPARATOR)

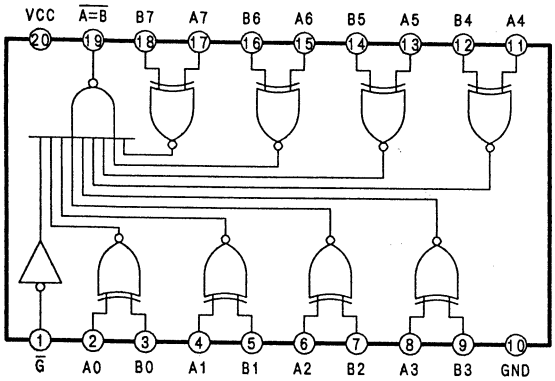

AN6558/S
(LOW NOISE , HIGH SPEED AMP)

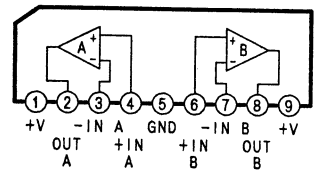

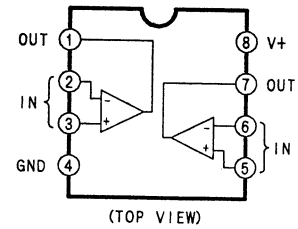

HA19505
(VIDEO 10 BIT D/A CONVERTER)

BLOCK DIAGRAM

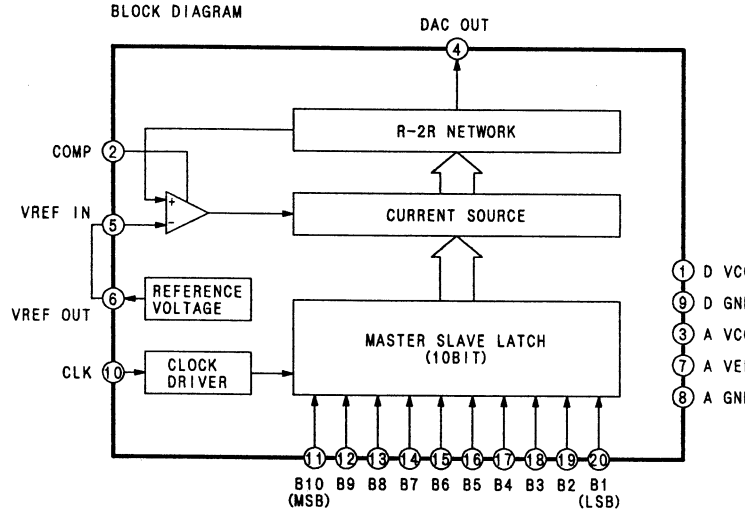

7485
(4 BIT MAGNITUDE COMPARATOR)

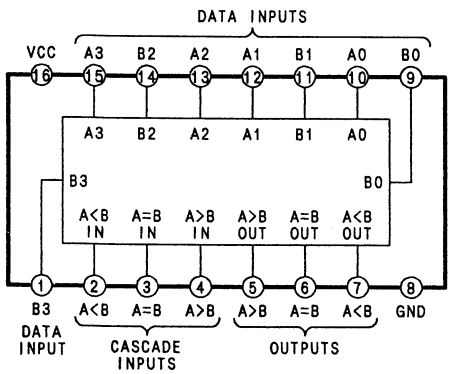

FUNCTION TABLES

COMPARING INPUTS				CASCADING INPUTS			OUTPUTS		
A3, B3	A2, B2	A1, B1	A0, B0	A>B	A<B	A=B	A>B	A<B	A=B
A3>B3	X	X	X	X	X	X	H	L	L
A3<B3	X	X	X	X	X	X	L	H	L
A3=B3	A2>B2	X	X	X	X	X	H	L	L
A3=B3	A2<B2	X	X	X	X	X	L	H	L
A3=B3	A2=B2	A1>B1	X	X	X	X	H	L	L
A3=B3	A2=B2	A1<B1	X	X	X	X	L	H	L
A3=B3	A2=B2	A1=B1	A0>B0	X	X	X	H	L	L
A3=B3	A2=B2	A1=B1	A0<B0	X	X	X	L	H	L
A3=B3	A2=B2	A1=B1	A0=B0	H	L	L	H	L	L
A3=B3	A2=B2	A1=B1	A0=B0	L	H	L	L	H	L

A3=B3	A2=B2	A1=B1	A0=B0	X	X	H	L	L	H
A3=B3	A2=B2	A1=B1	A0=B0	H	H	L	L	L	L
A3=B3	A2=B2	A1=B1	A0=B0	L	L	L	H	H	L

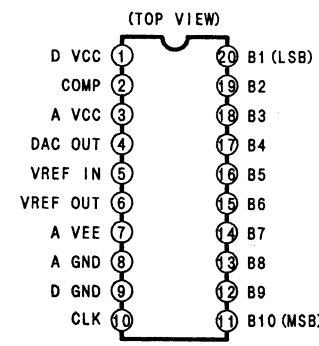

AD707KR
(SUPPER LOW DRIFT)

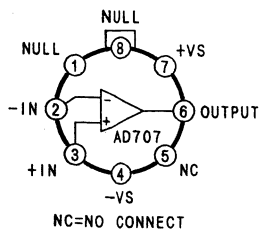

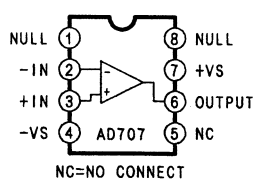

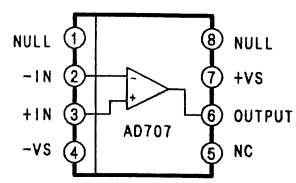

HD146818
(REAL TIME CLOCK PLUS RAM)

(TOP VIEW)

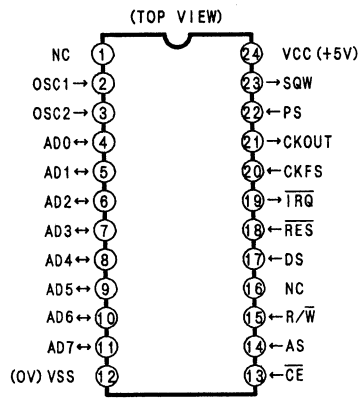

BLOCK DIAGRAM

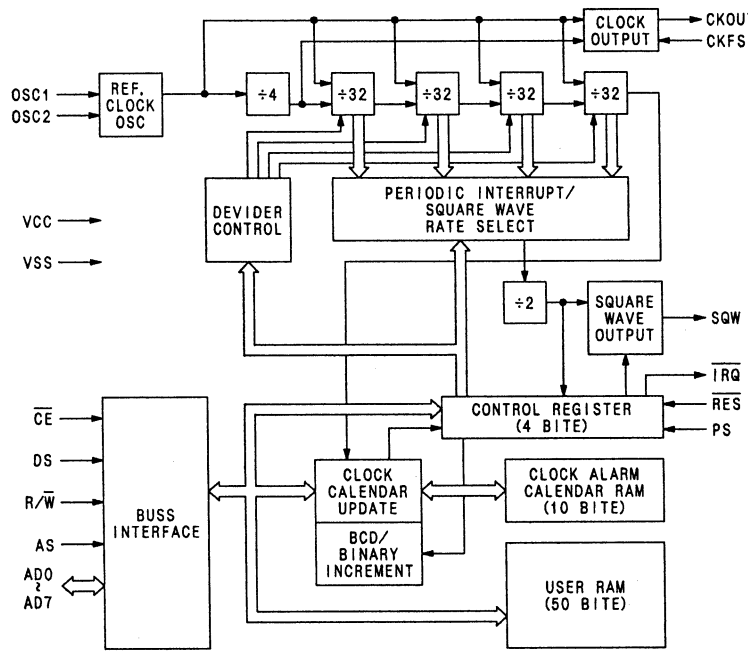

HD63484
(ADVANCED CRT CONTROLLER)

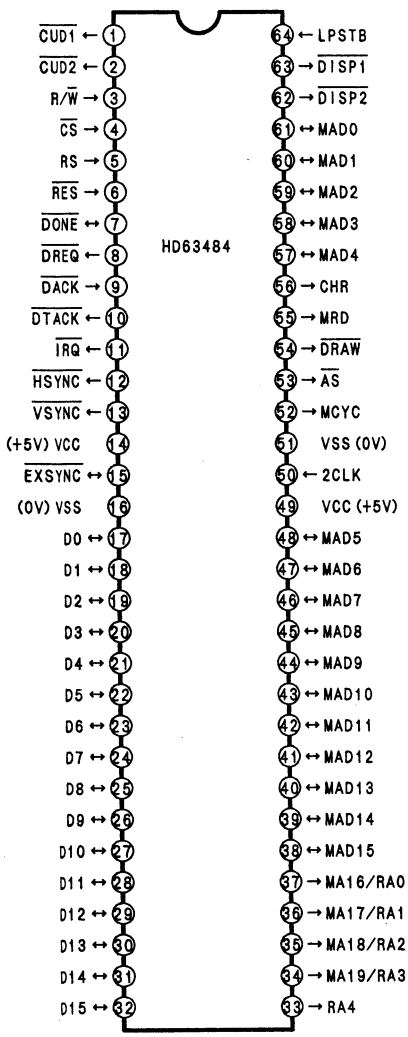

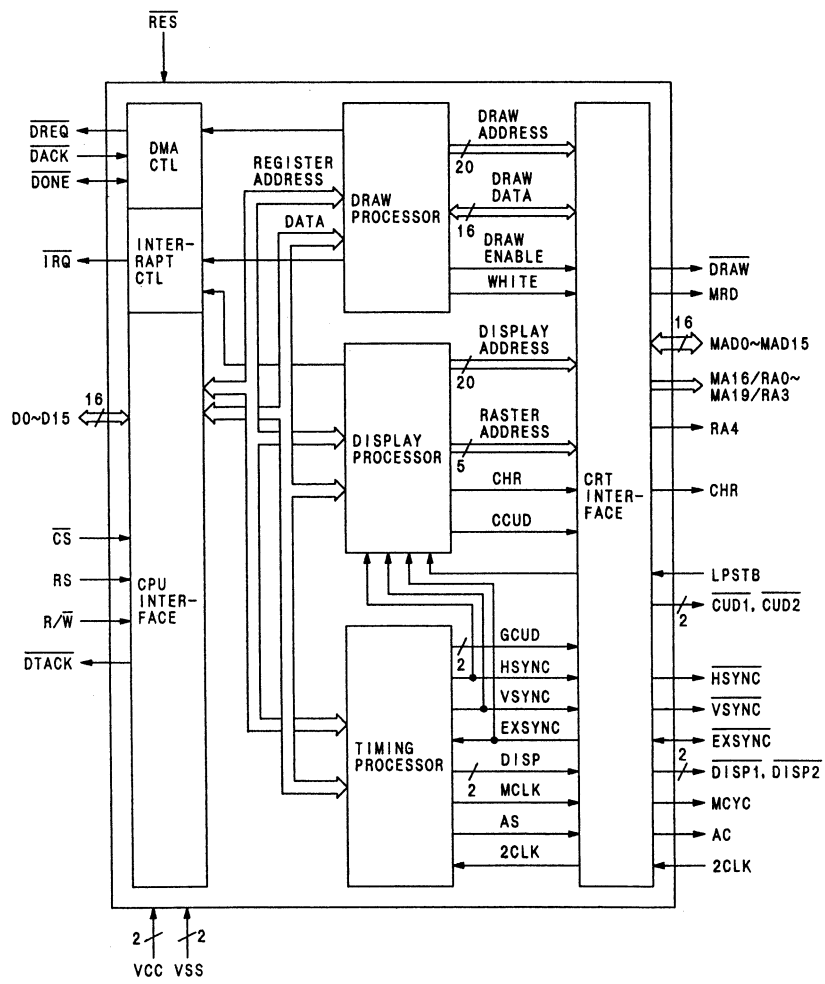

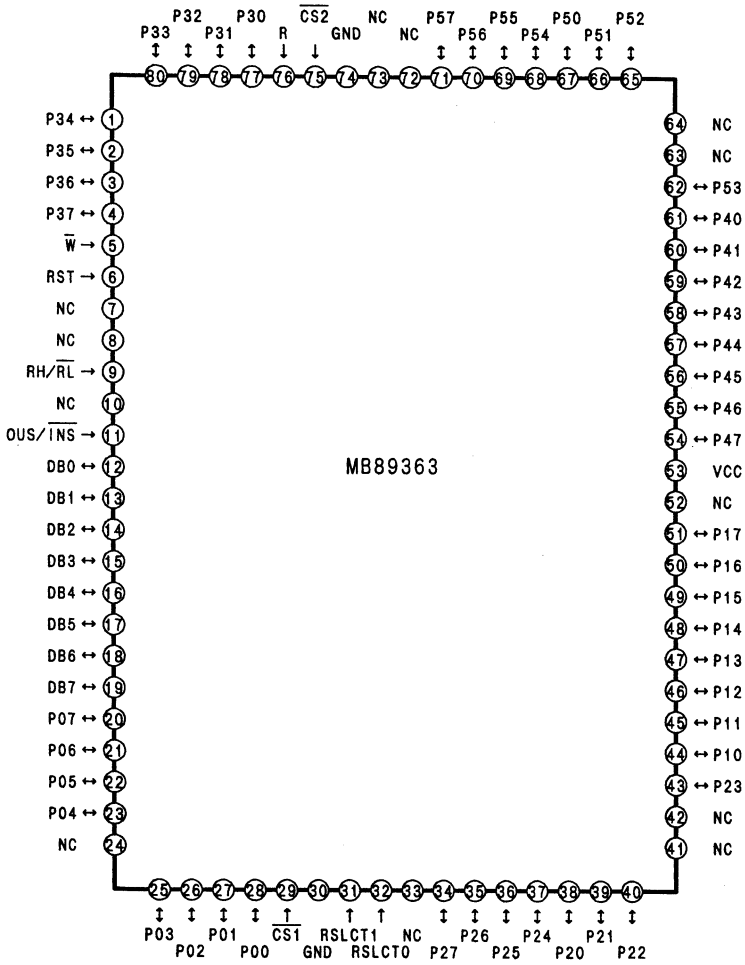

LM2903M
(VOLTAGE COMPARATOR (DUAL))

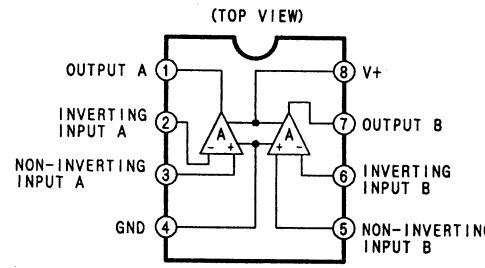

MB89363
(PROGRAMMABLE PERIPHERAL INTERFACE)
(TOP VIEW)

BLOCK DIAGRAM

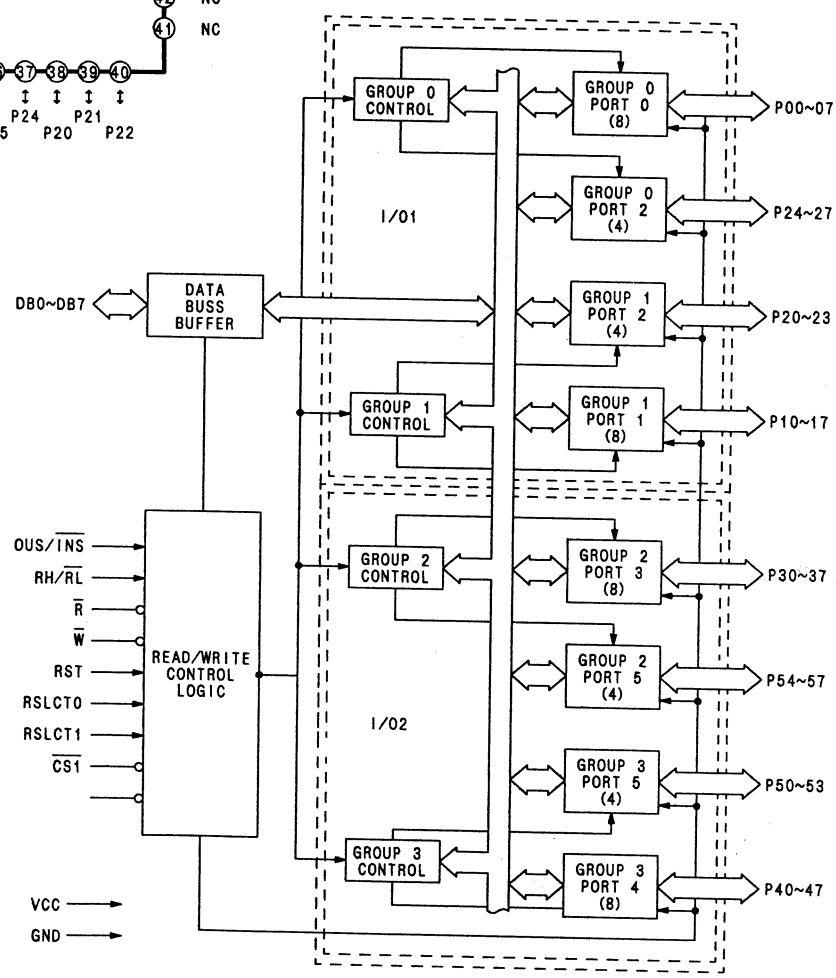

LM311M
(VOLTAGE COMPARATOR)

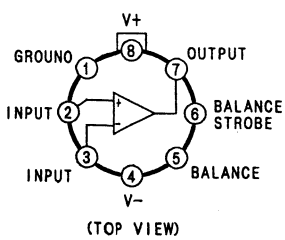

UPD7210
(GPIB INTERFACE CONTROLLER)

(TOP VIEW)

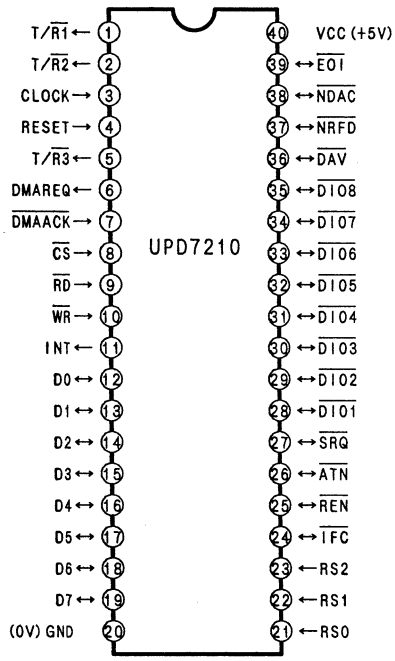

MAX690
(POWER WATCHDOG & CONTROL)

BLOCK DIAGRAM

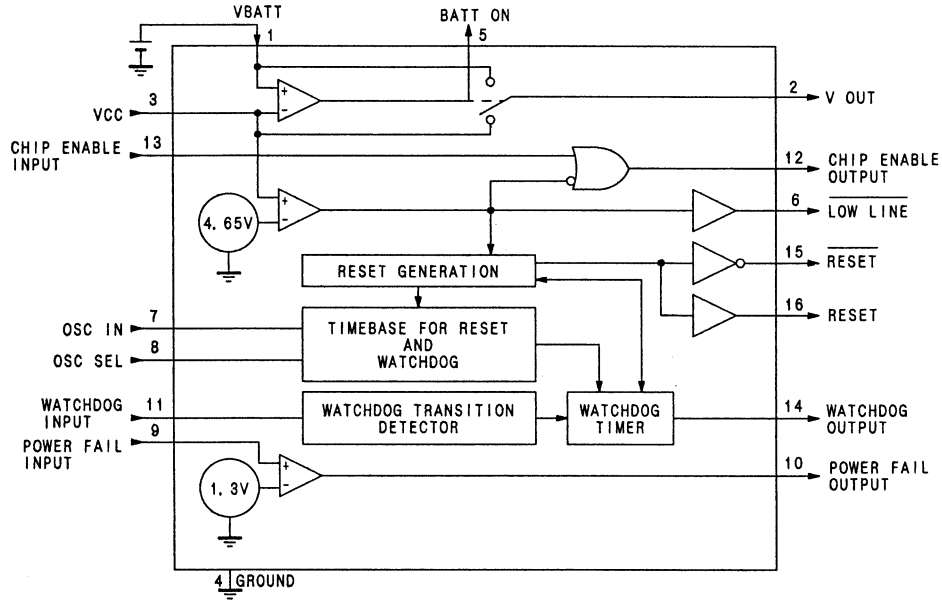

BLOCK DIAGRAM

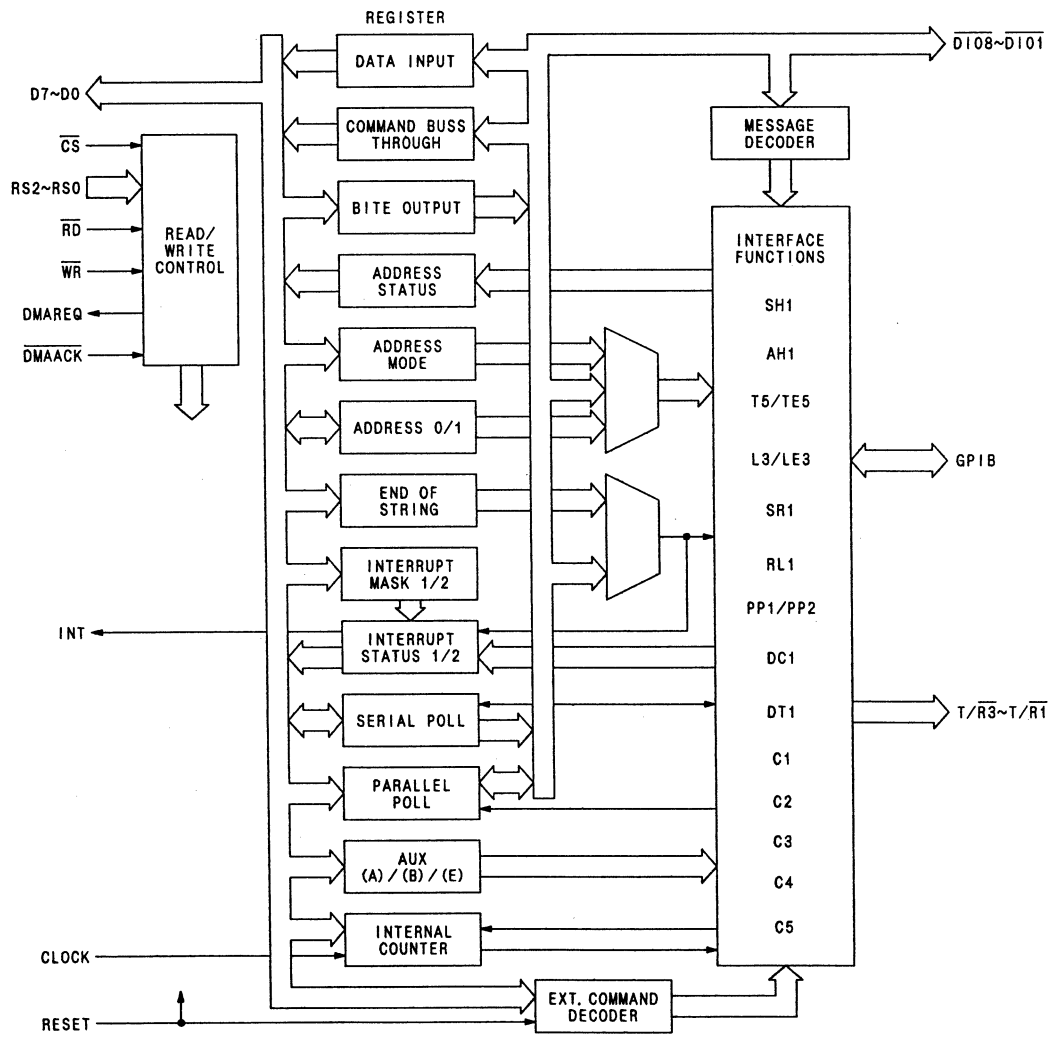

ZR33891
(DIGITAL FILTER PROCESSOR)

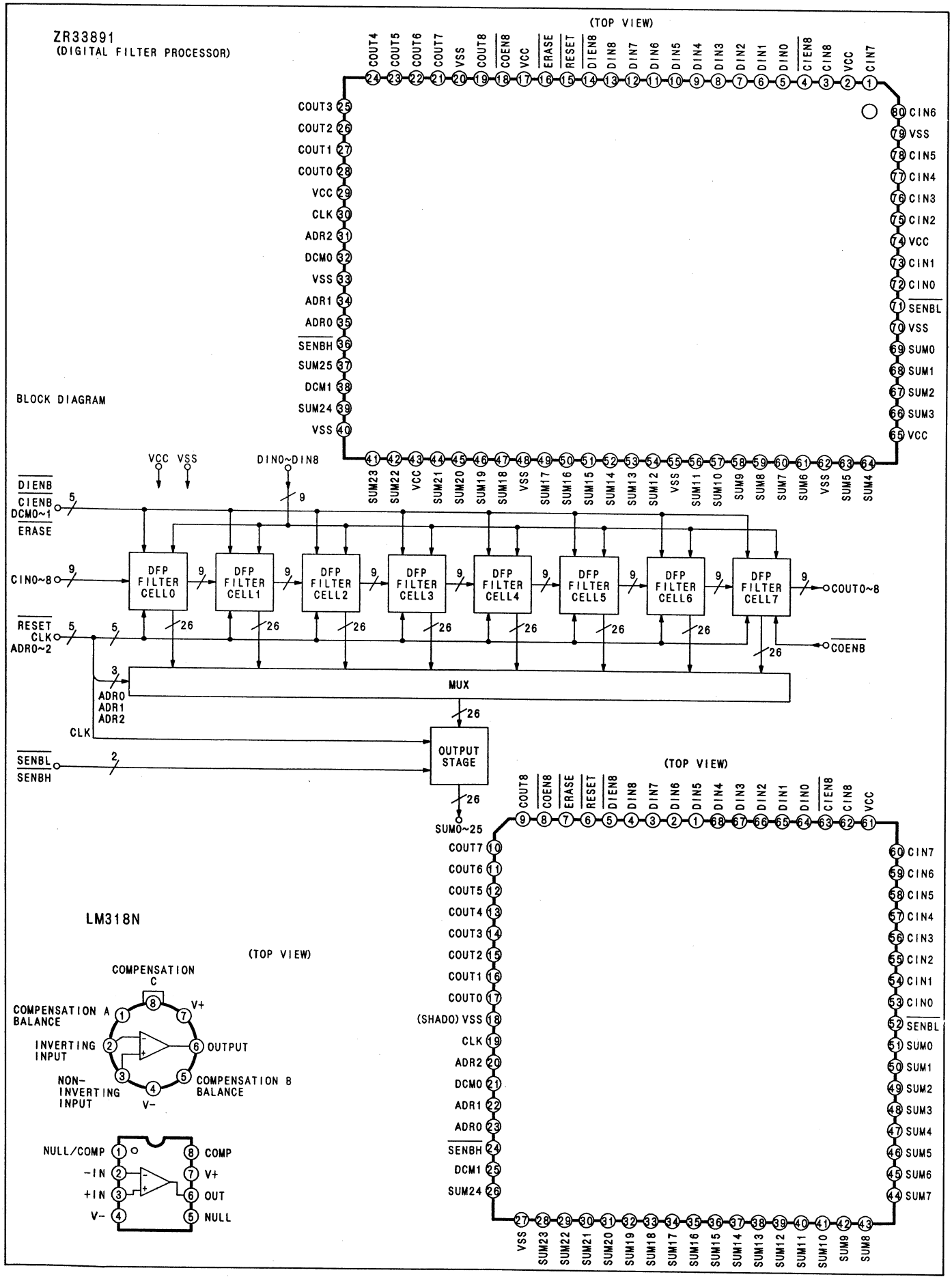

MN67512

(MICROPROCESSOR FOR VTR SERVO)

(TOP VIEW)

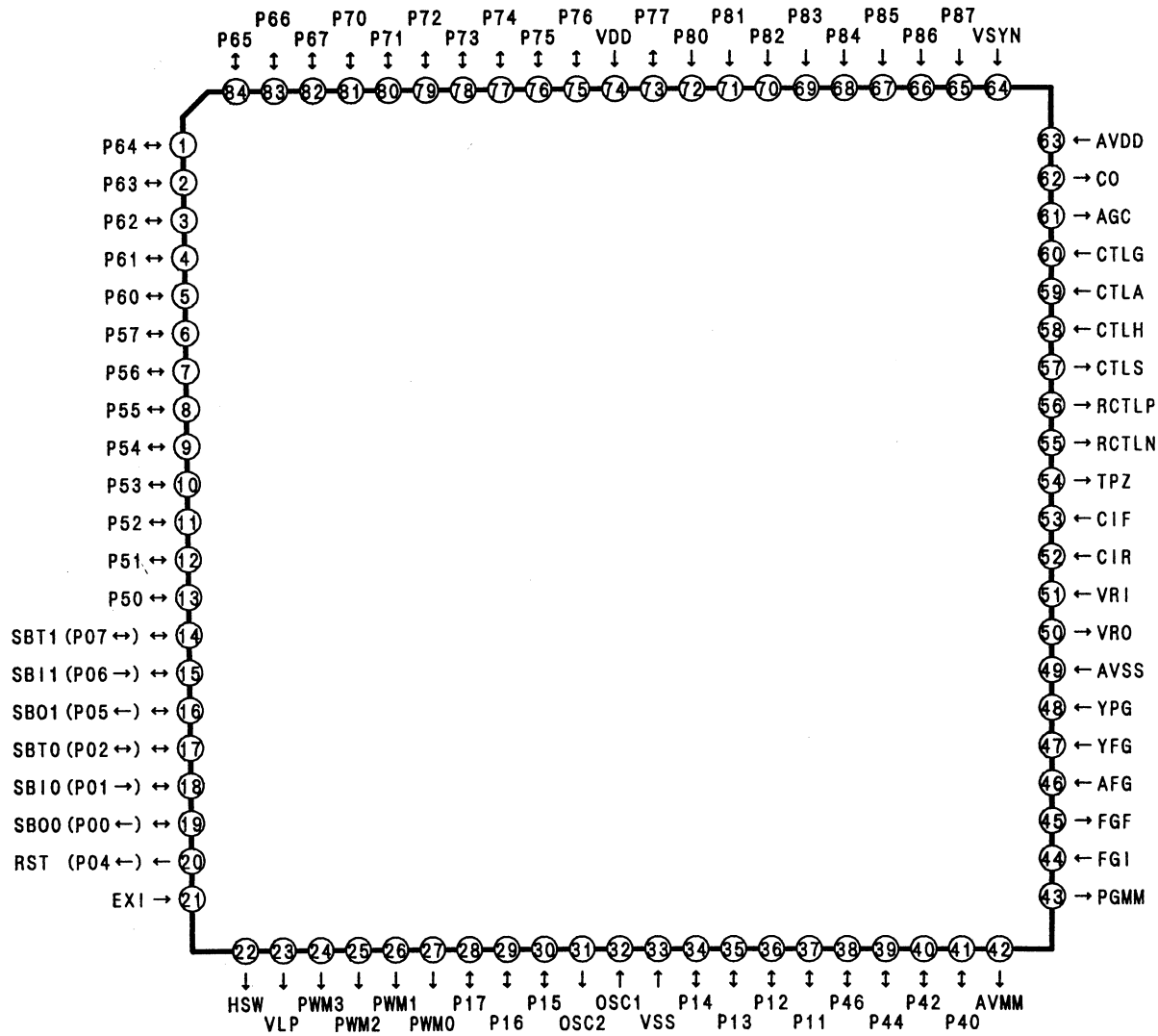

ADM50ND

(DELAY IC)

(TOP VIEW)

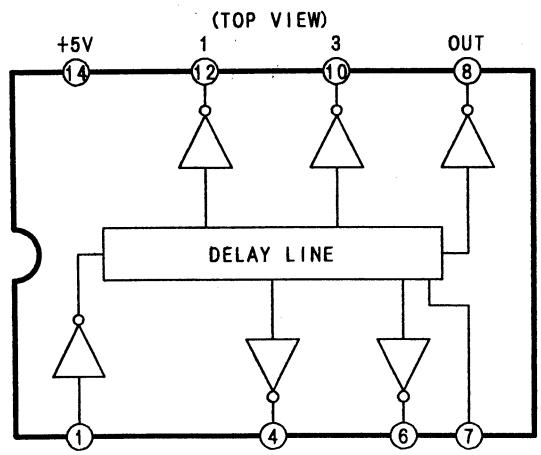

74573
(OCTAL 3 STATE D-LATCHES)

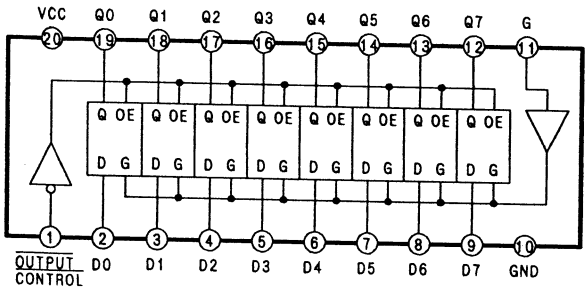

INPUT		FUNCTION
OUTPUT CONTROL	LATCH ENABLE	
L	L	LATCH (HOLD)
L	H	Q=D
H	X	HIGH-Z

AN6558/S
(LOW NOISE , HIGH SPEED AMP)

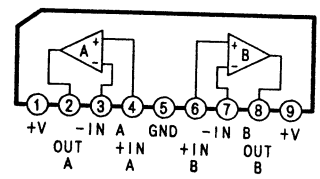

BA301

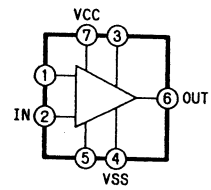

AN91A12S
(SYNC SEPARATOR)

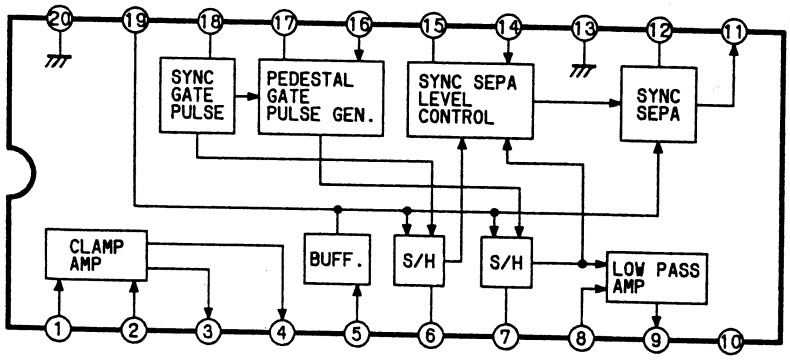

CXD1175M
(8 bit VIDEO A/D)

BLOCK DIAGRAM

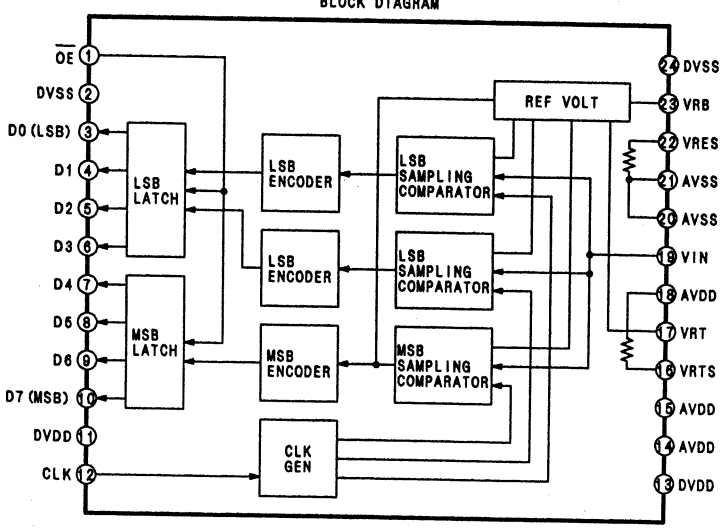

HM628128LFP7
(131,072×8BIT S-RAM)

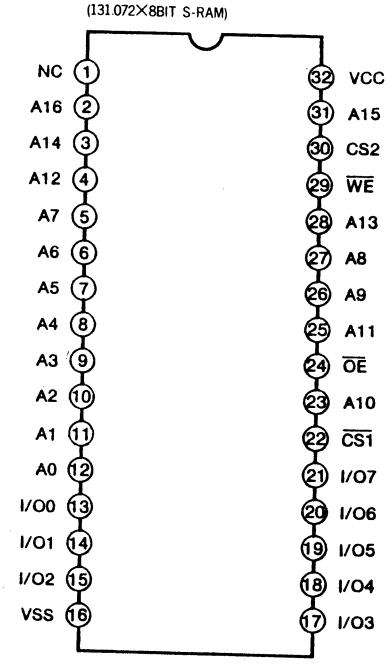

GAL20V8A

(E² CMOS PROGRAMMABLE AND ARRAY (64x40))

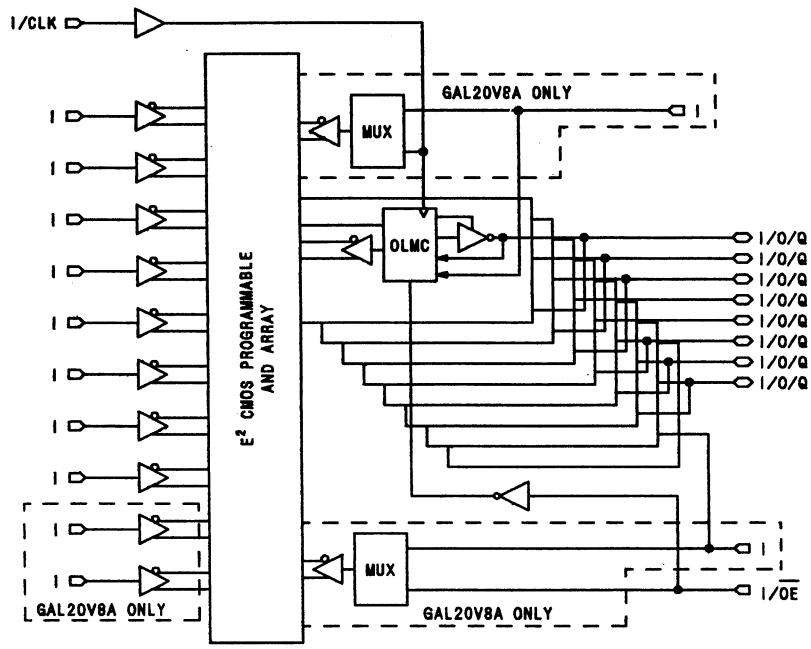

CHIP CARRIER

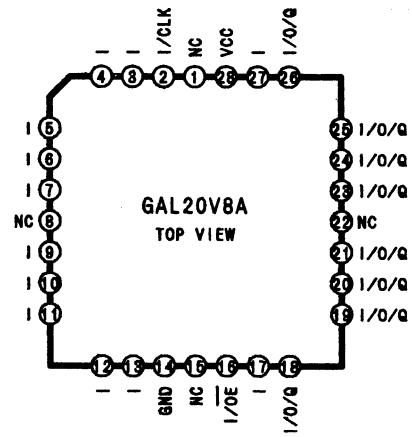

DIP

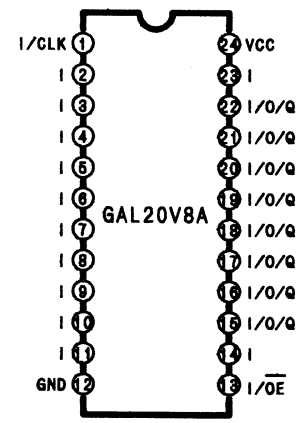

IDTFCT825AS0

(LATCH)

(TOP VIEW)

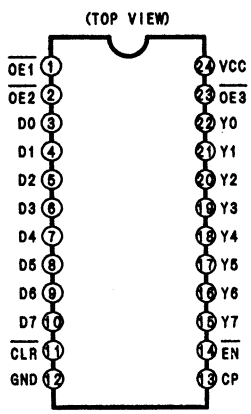

TRUTH TABLE

INPUTS					INTERNAL OUTPUTS		FUNCTION
OE	CLR	EN	D1	CP	Q1	Y1	
H	X	L	L	↑	L	Z	HIGH Z
H	X	L	H	↑	H	Z	
H	L	X	X	X	L	Z	CLEAR
L	L	X	X	X	L	L	
H	H	H	X	X	NC	Z	HOLD
L	H	H	X	X	NC	NC	
H	H	L	L	↑	L	Z	LOAD
H	H	L	H	↑	H	Z	
L	H	L	L	↑	L	L	
L	H	L	H	↑	H	H	

NOTE:
1. H=HIGH, L=LOW, X=DON'T CARE, NC=NO CHANGE, ↑=LOW-TO-HIGH TRANSITION, Z=HIGH IMPEDANCE

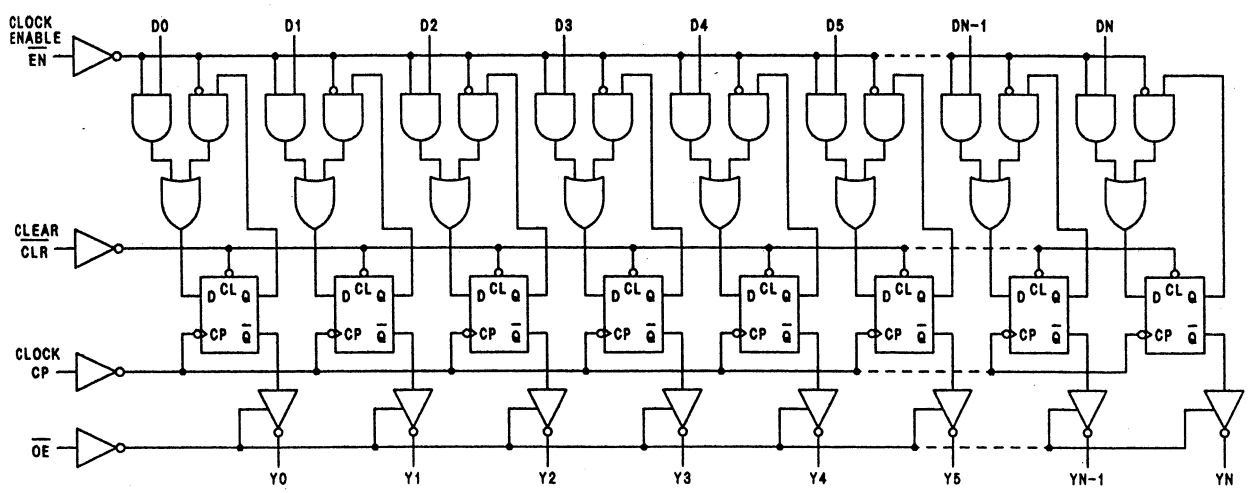

HD68000Y10
(16 BIT CPU)

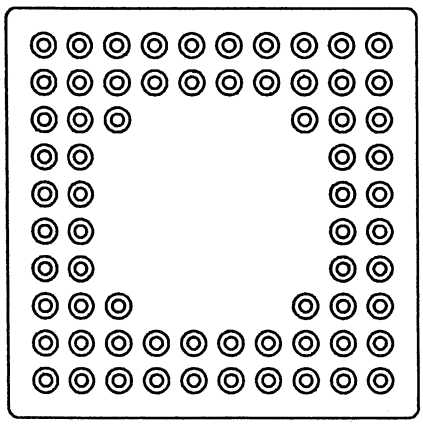

PGA 68PIN

PIN ON.	SIGNAL NAME	I/O	PIN ON.	SIGNAL NAME	I/O	PIN ON.	SIGNAL NAME	I/O	PIN ON.	SIGNAL NAME	I/O
1	——	-	18	A9	O	35	D1	I/O	52	A12	O
2	DTACK	I	19	——	-	36	AS	O	53	A15	O
3	BGACK	I	20	A14	O	37	LDS	O	54	A18	O
4	BR	I	21	A16	O	38	BG	O	55	VCC	-
5	CLK		22	A17	O	39	VCC	-	56	VSS	-
6	HALT	I/O	23	A19	O	40	VSS	-	57	A23	O
7	VMA	O	24	A20	O	41	RES	I/O	58	D14	I/O
8	E	O	25	A21	O	42	VPA	I	59	D11	I/O
9	BERR	I	26	A22	O	43	IPL2	I	60	D9	I/O
10	——	-	27	D15	I/O	44	IPL0	I	61	D6	I/O
11	FC2	O	28	D12	I/O	45	FC1	O	62	D3	I/O
12	FC0	O	29	D10	I/O	46	——	-	63	D0	I/O
13	A1	O	30	D8	I/O	47	A2	O	64	UDS	O
14	A3	O	31	D7	I/O	48	A5	O	65	R/W	O
15	A4	O	32	D5	I/O	49	A8	O	66	IPL1	I
16	A6	O	33	D4	I/O	50	A10	O	67	A13	O
17	A7	O	34	D2	I/O	51	A11	O	68	D13	I/O

L7A0543
(SYS SYNC GENERATOR)

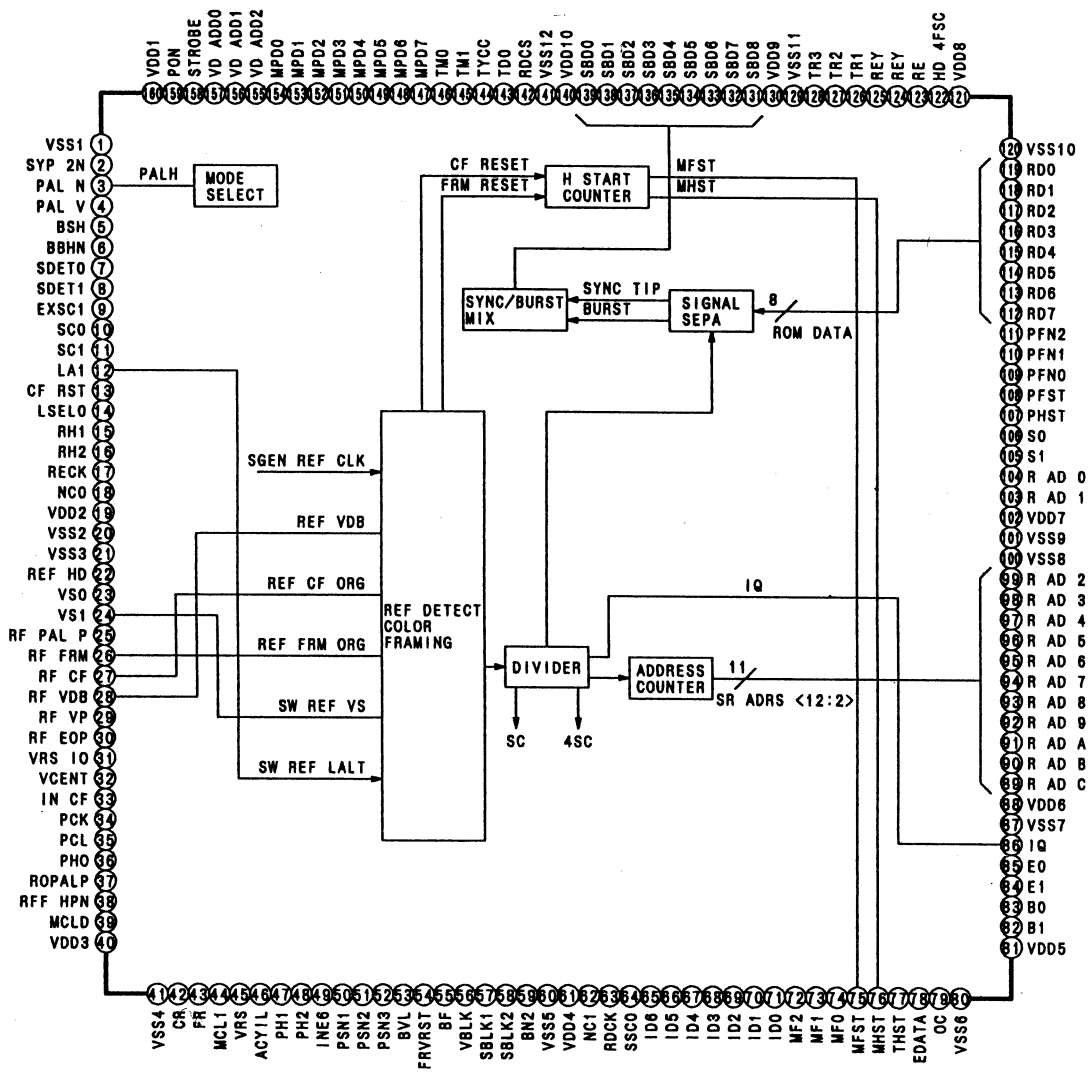

MB8421-90LPF

(16K BIT DUAL PORT STATIC RAM)

(TOP VIEW)

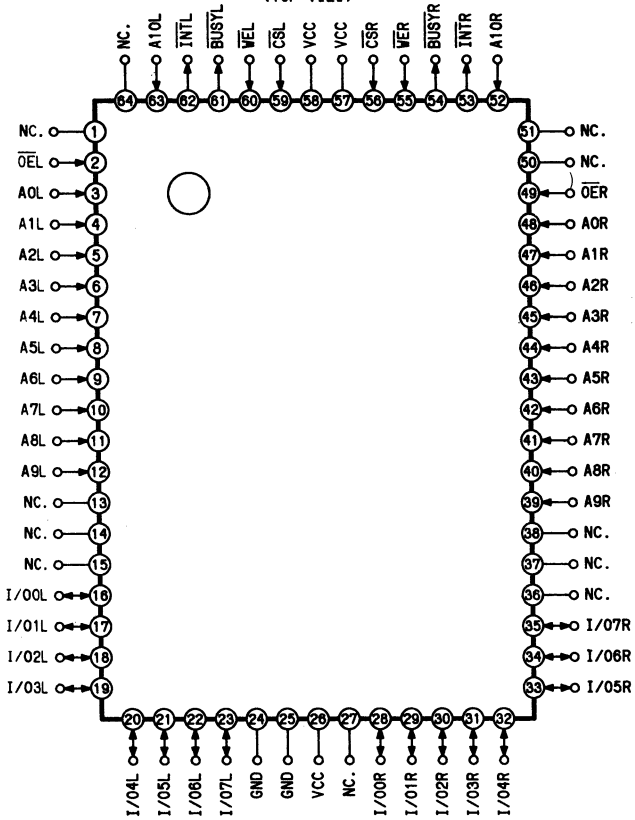

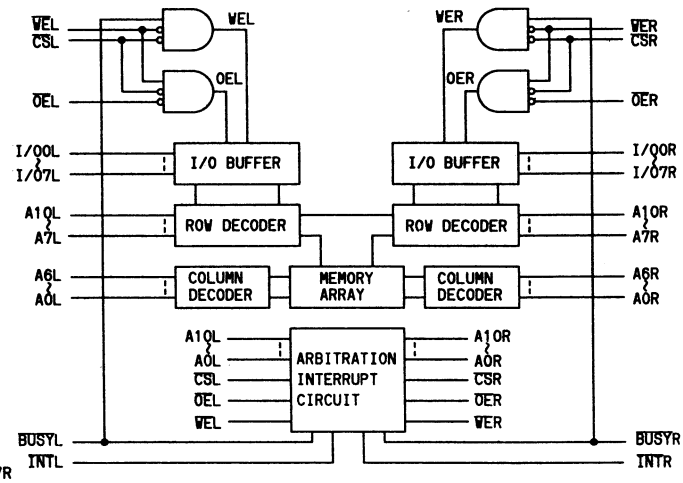

MB8621926

(DELAY FOR DIGITAL AUDIO)

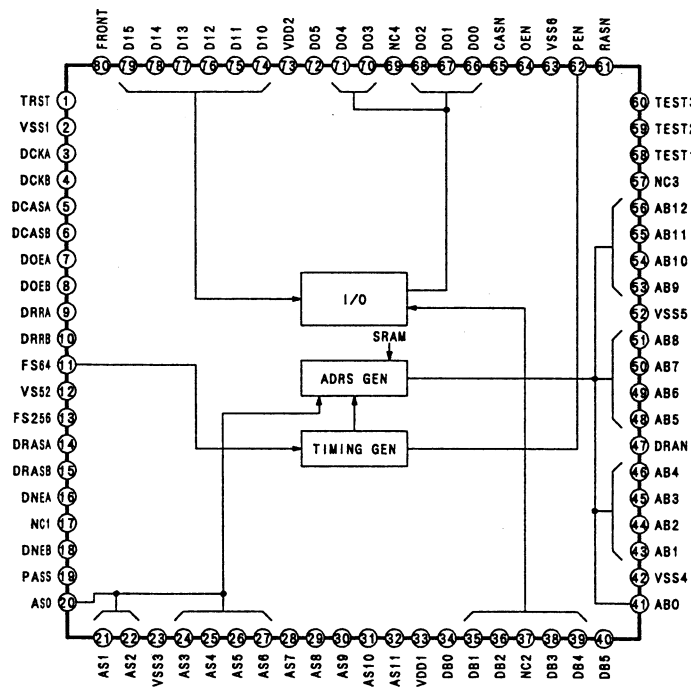

MC4044

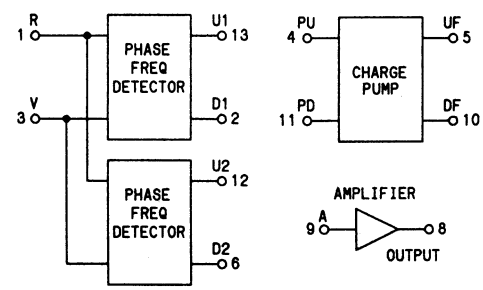

TRUTH TABLE

INPUT STATE	INPUT		OUTPUT			
	R	V	U1	D1	U2	D2
1	0	0	×	×	1	1
2	1	0	×	×	0	1
3	1	1	×	×	1	0
4	1	0	×	×	0	1
5	0	0	×	×	1	1
6	1	0	×	×	0	1
7	0	0	×	×	1	1
8	1	0	×	×	0	1
9	0	0	0	1	1	1
10	0	1	0	1	1	1
11	0	0	1	1	1	1
12	0	1	1	1	1	1
13	0	0	1	0	1	1
14	0	1	1	0	1	1
15	0	0	1	0	1	1
16	1	0	1	0	0	1
17	0	0	1	1	1	1

NJM360M
(OP AMP)

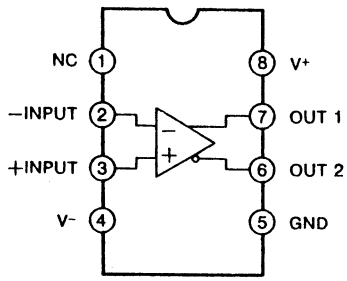

TC4S66F
(BILATERAL SWITCH)

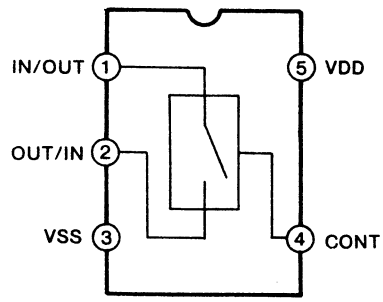

TC4S69F
(INVETER GATE)
(TOP VIEW)

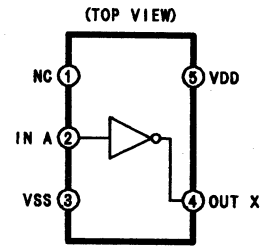

Service Manual

Modules

- ***Block Diagrams***
- ***Printed Circuit Boards***
- ***Schematic Diagrams***

Note:

1. Do not use the part number shown on the schematic diagram or P.C.Board layout for ordering.
   The correct part number for ordering is shown in the Exploded Views/Parts List section.
2. Unless otherwise specified, all resistors are in OHMS,
   K=1,000 OHMS, all capacitors are in MICROFARADS (μF), P=$\mu\mu$F.

Panasonic
Broadcast Systems

CONTENTS

BLOCK DIAGRAMS

AUDIO /VIDEO OVERALL 4-1-1
L1 AUDIO A/D,D/A VIDEO D/A (AUDIO A/D,D/A SECTION) 4-1-2
L1 AUDIO A/D,D/A VIDEO D/A (VIDEO D/A SECTION) 4-1-3
L2 VIDEO/AUDIO REC 4-1-4
L3 VIDEO AUDIO PLAYBACK 4-1-5
L3 VIDEO/AUDIO PLAYBACK (PCM PROCESS 4-1-6
L4 VIDEO PROCESS 4-1-7
L4 SYNC GENERATOR 4-1-8
S1,S2 EQUALIZER 4-1-9
S3 CUE AUDIO REC 4-1-10
S3 CUE AUDIO PLAYBACK 4-1-11
S4 AUTO TRACKING 4-1-11
S5 SERVO 4-1-12
S6 TIME CODE 4-1-12
S7 SYSTEM CONTROL 4-1-13
S8 AUDIO PROCESS 4-1-13
S9 VIDEO A/D PLL 4-1-14
REC AMPLIFIER 4-1-15
AUDIO IN 4-1-16
AUDIO OUT 4-1-16
POWER SUPPLY 4-1-18

SCHEMATIC DIAGRAMS

L1 AUDIO A/D,D/A VIDEO D/A 4-2-1
L MOTHER (1/7) FOR L1 4-2-10
L2 VIDEO AUDIO REC 4-2-11
L MOTHER (2/7) FOR L2.....4-2-11
L3 VIDEO/AUDIO PB 4-2-30
L MOTHER (3/7) FOR L3.....4-2-53
L4 VIDEO PROCESS 4-2-54
L MOTHER (4/7) FOR L4.....4-2-73
L MOTHER (5/7,6/7) 4-2-74
L MOTHER (7/7) 4-2-75
S1,S2 EQUALIZER CH0,CH1 4-2-76
S MOTHER (114) FOR S1 4-2-81
S MOTHER (2/14) FOR S2 4-2-82
S3 CUE AUDIO 4-2-83
S MOTHER (3/14) FOR S3.....4-2-87
S4 AT 4-2-88
S MOTHER (4/14) FOR S4 4-2-91
S5 SERVO 4-2-95
S MOTHER (5/14) FOR S5 4-2-98
S6 TIME CODE 4-2-100
S MOTHER (6/14) FOR S6..... 4-2-105
S7 SYSTEM CONTROL 4-2-106
S MOTHÈR (7/14) FOR S7 4-2-113
S8 AUDIO PROCESS 4-2-114
S MOTHER (8/14) FOR S8.....4-2-114
S9 VIDEO A/D PLL 4-2-130
S MOTHER (9/14) FOR S9 4-2-137
S MOTHER 4-2-138
M1 DRIVE 4-2-142
REC AMP 4-2-146
BUFFER AMP 4-2-153
HEAD AMP 4-2-154
HA POWER 4-2-155
HA REGULATOR 1 4-2-156
POWER SUPPLY 1 4-2-157
POWER SUPPLY 2 4-2-160
AT POWER 4-2-164
FR MODE 4-2-165
FR SWITCH 4-2-166
FR FUNCTION 4-2-167
FR BASE 1 4-2-174
FR BASE 2 4-2-175
REMOTE JACK 1 4-2-178
VIDEO IN/OUT 4-2-179
AUDIO MONITOR 4-2-170
AUDIO IN/OUT (FOR PAL) 4-2-181
AUDIO IN/OUT (FOR NTSC) 4-2-185
FR HP AMP 4-2-189
D AUDIO IN 4-2-190
D AUDIO OUT 4-2-190
REMOTE JACK 3 4-2-190
REMOTE JACK 2 4-2-191
TENSION I/F 4-2-192
HEADPHONE JACK (1) 4-2-192
POWER LED 4-2-192
EJECT 4-2-192
A/C HEAD I/F 4-2-192
MECH I/F 4-2-193
L MOTHER 4-2-194
S MOTHER 4-2-197
INTERCONNECTION 4-2-205

CIRCUIT BOARD DIAGRAMS

L1 AUDIO A/D,D/A VIDEO D/A 4-3-3
L2 VIDEO/AUDIO REC 4-3-4
L2 VIDEO AUDIO REC SUB 4-3-5
L3 VIDEO AUDIO PB 4-3-7
L4 VIDEO PROCESS 4-3-8
L4 VIDEO PROCESS SUB 4-3-10
S1 EQUALIZER CH0 4-3-11
S1 EQUALIZER SUB 4-3-11
S2 EQUALIZER CH1 4-3-11
S2 EQUALIZER SUB 4-3-11
S3 CUE AUDIO 4-3-12
S4 AT 4-3-13
S4 AT SUB 4-3-13
S5 SERVO 4-3-14
S5 SERVO SUB 4-3-14
S6 TIME CODE 4-3-15
S6 TIME CODE SUB 4-3-15
S7 SYSTEM CONTROL 4-3-16
S8 AUDIO PROCESS 4-3-17
S8 AUDIO PROCESS SUB 4-3-18
S9 VIDEO A/D PLL SUB 4-3-18
S9 VIDEO A/D PLL 4-3-19
L MOTHER 4-3-20
S MOTHER 4-3-21
M1 DRIVE 4-3-22
M1 DRIVE SUB 4-3-22
REC AMP 4-3-23
HA POWER 4-3-24
HA REGULATOR 4-3-24
POWER SUPPLU SUB 3 4-3-24
POWER SUPPLY 1 4-3-25
POWER SUPPLY SUB 1 4-3-25
POWER SUPPLY 2 4-3-26
POWER SUPPLY SUB 2 4-3-26
AT POWER 4-3-26
FR MODE 4-3-27
FR SW 4-3-28
FR FUNCTION 4-3-29
FR BASE 1 4-3-30
FR BASE 2 4-3-31
REMOTE JACK 1 4-3-32
REMOTE JACK 2 4-3-32
REMOTE JACK 3 4-3-32
AUDIO IN/OUT MONITOR 4-3-33
AUDIO IN OUT 4-3-34
BUFFER AMP 4-3-35
MECH I/F 4-3-36
DIGITAL AUDIO IN 4-3-37
DIGITAL AUDIO OUT 4-3-37
S REEL MOTOR CONNECTION 4-3-38
T REEL MOTOR CONNECTION 4-3-38
CONNECTION (B) 4-3-38
SUB LOADING DET 4-3-38
M PHOTO SENSOR 4-3-38
POSITION DET SENSOR 4-3-38
PHOTO 4-3-38
CONNECTION A 4-3-38
DRUM CONNECTION 4-3-38
FR HP AMP 4-3-39
VIDEO IN/OUT 4-3-40
EJECT 4-3-41
HEAD CONNECTION 4-3-41
POWER LED 4-3-41
TENSION I/F 4-3-41
S EXTENSION 4-3-42

AUDIO/VIDEO OVERALL BLOCK DIAGRAM

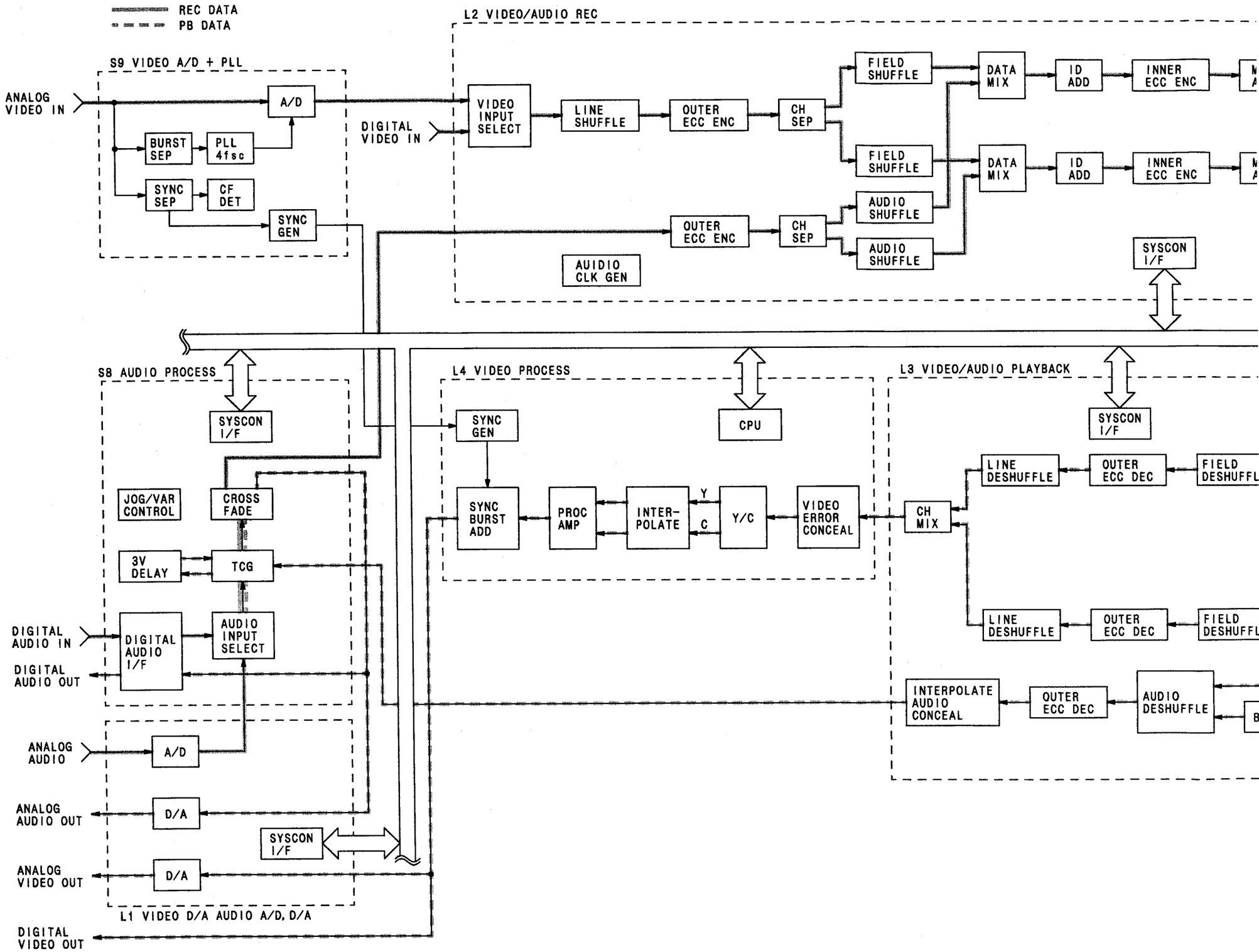

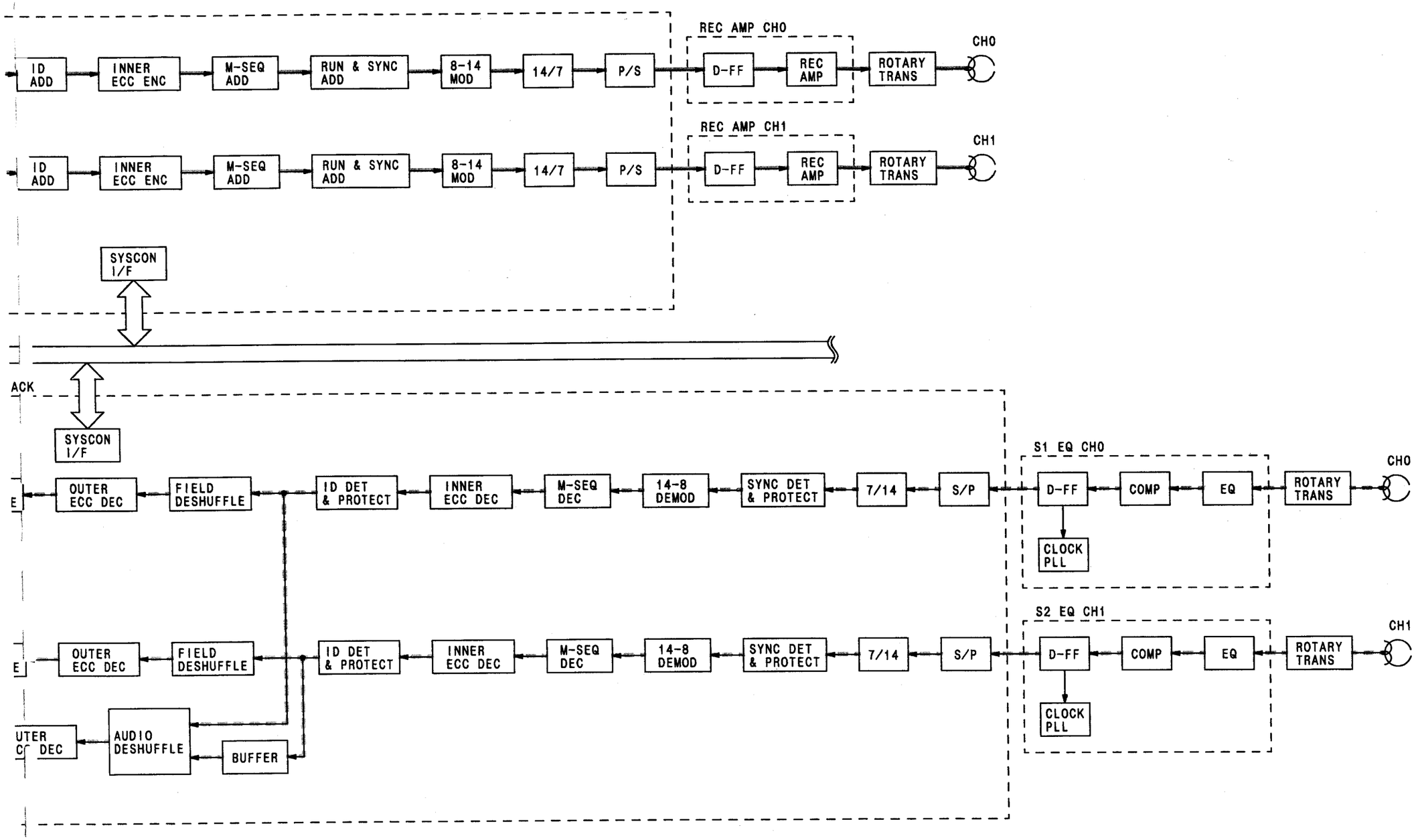
REC AMP CH0
ID ADD
INNER ECC ENC
M-SEQ ADD
RUN & SYNC ADD
8-14 MOD
14/7
P/S
D-FF
REC AMP
ROTARY TRANS
CH0
REC AMP CH1
ID ADD
INNER ECC ENC
M-SEQ ADD
RUN & SYNC ADD
8-14 MOD
14/7
P/S
D-FF
REC AMP
ROTARY TRANS
CH1
SYSCON I/F
ACK
SYSCON I/F
S1 EQ CH0
OUTER ECC DEC
FIELD DESHUFFLE
ID DET & PROTECT
INNER ECC DEC
M-SEQ DEC
14-8 DEMOD
SYNC DET & PROTECT
7/14
S/P
D-FF
COMP
EQ
ROTARY TRANS
CH0
CLOCK PLL
S2 EQ CH1
OUTER ECC DEC
FIELD DESHUFFLE
ID DET & PROTECT
INNER ECC DEC
M-SEQ DEC
14-8 DEMOD
SYNC DET & PROTECT
7/14
S/P
D-FF
COMP
EQ
ROTARY TRANS
CH1
CLOCK PLL
AUDIO DESHUFFLE
BUFFER

L1 AUDIO A/D, D/A, VIDEO D/A BLOCK DIAGRAM (AUDIO A/D, D/A SECTION)

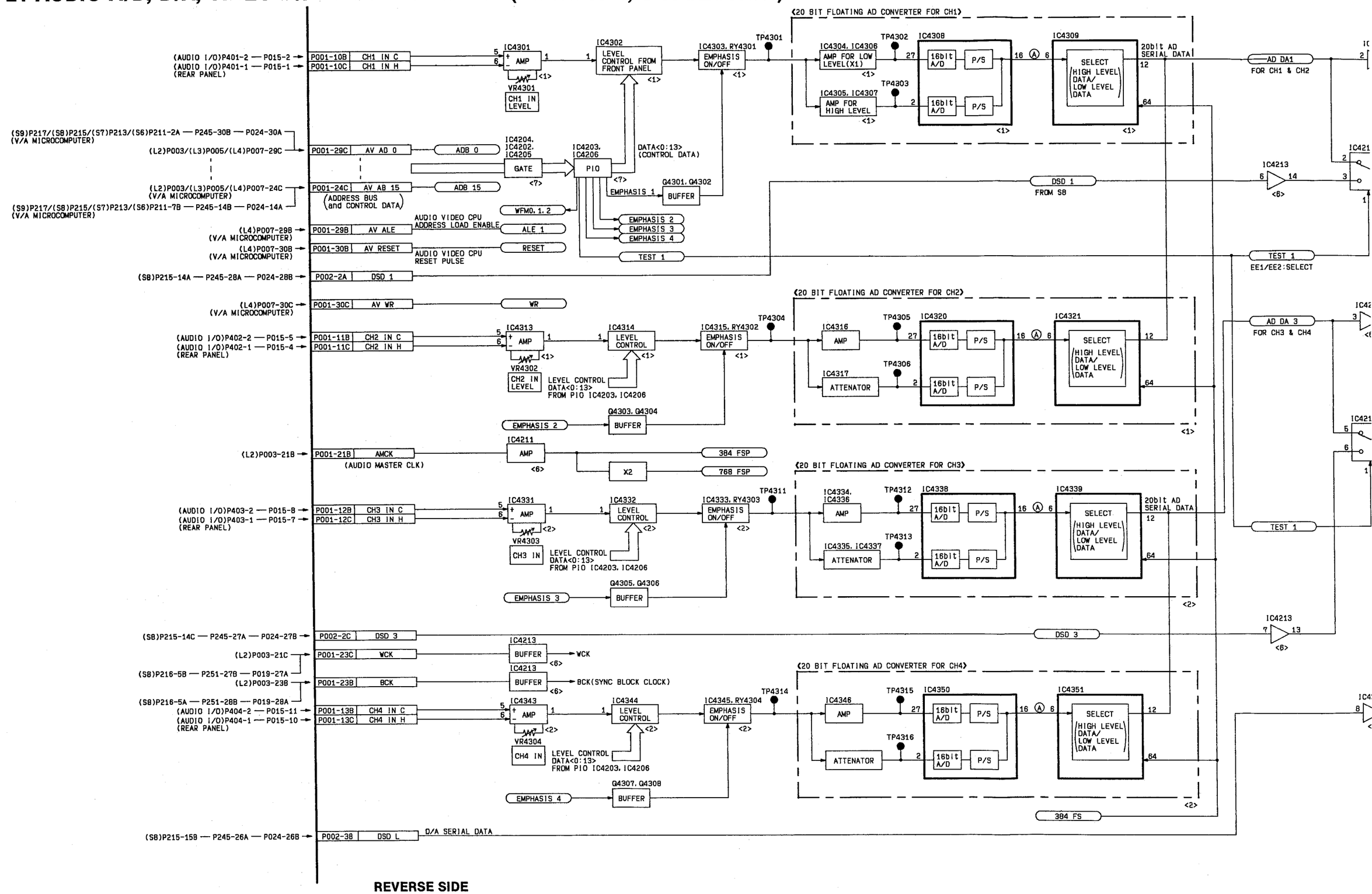

REVERSE SIDE

AUDIO/VIDEO OVERALL

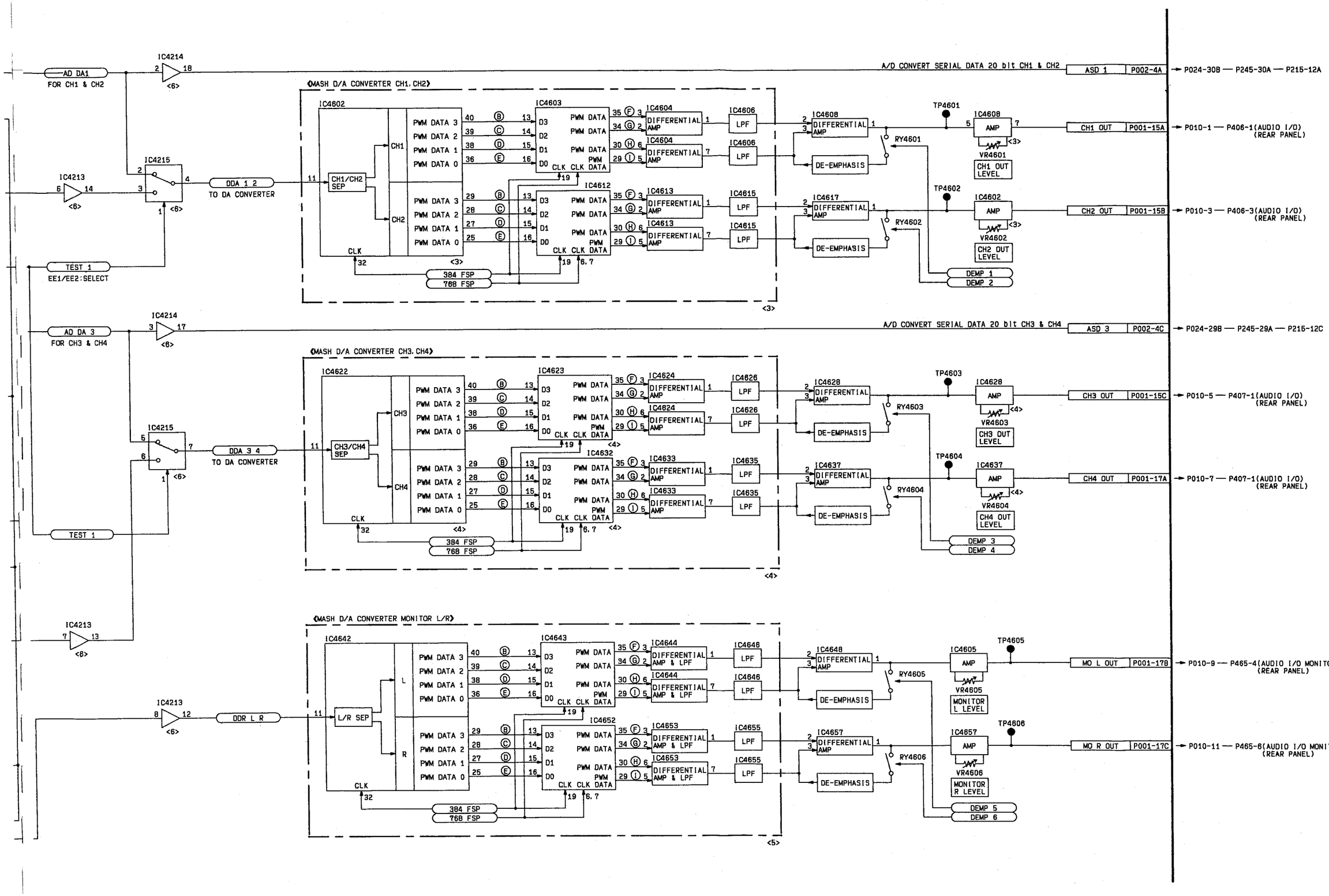
AD DA1
FOR CH1 & CH2
IC4214
TO DA CONVERTER
IC4215
IC4213
TEST 1
EE1/EE2:SELECT
DDA 1 2
《MASH D/A CONVERTER CH1, CH2》
IC4602
CH1/CH2 SEP
CH1
CH2
PWM DATA 3
PWM DATA 2
PWM DATA 1
PWM DATA 0
CLK
384 FSP
768 FSP
IC4603
IC4612
IC4604
IC4613
IC4606
IC4615
LPF
DIFFERENTIAL AMP
IC4608
IC4617
DE-EMPHASIS
RY4601
RY4602
DEMP 1
DEMP 2
TP4601
TP4602
AMP
VR4601
CH1 OUT LEVEL
VR4602
CH2 OUT LEVEL
A/D CONVERT SERIAL DATA 20 bit CH1 & CH2
ASD 1
P002-4A
CH1 OUT
P001-15A
CH2 OUT
P001-15B
P024-30B — P245-30A — P215-12A
P010-1 — P406-1(AUDIO I/O) (REAR PANEL)
P010-3 — P406-3(AUDIO I/O) (REAR PANEL)
AD DA 3
FOR CH3 & CH4
DDA 3 4
《MASH D/A CONVERTER CH3, CH4》
CH3/CH4 SEP
CH3
CH4
IC4622
IC4623
IC4632
IC4624
IC4633
IC4626
IC4635
IC4628
IC4637
TP4603
TP4604
VR4603
CH3 OUT LEVEL
VR4604
CH4 OUT LEVEL
RY4603
RY4604
DEMP 3
DEMP 4
A/D CONVERT SERIAL DATA 20 bit CH3 & CH4
ASD 3
P002-4C
CH3 OUT
P001-15C
CH4 OUT
P001-17A
P024-29B — P245-29A — P215-12C
P010-5 — P407-1(AUDIO I/O) (REAR PANEL)
P010-7 — P407-1(AUDIO I/O) (REAR PANEL)
《MASH D/A CONVERTER MONITOR L/R》
DDR L R
L/R SEP
L
R
IC4642
IC4643
IC4652
IC4644
IC4653
IC4646
IC4655
IC4648
IC4657
IC4605
TP4605
TP4606
VR4605
MONITOR L LEVEL
VR4606
MONITOR R LEVEL
RY4605
RY4606
DEMP 5
DEMP 6
MO L OUT
P001-17B
MO R OUT
P001-17C
P010-9 — P465-4(AUDIO I/O MONITOR) (REAR PANEL)
P010-11 — P465-6(AUDIO I/O MONITOR) (REAR PANEL)

L1 AUDIO A/D, D/A, VIDEO D/A BLOCK DIAGRAM (VIDEO D/A SECTION)

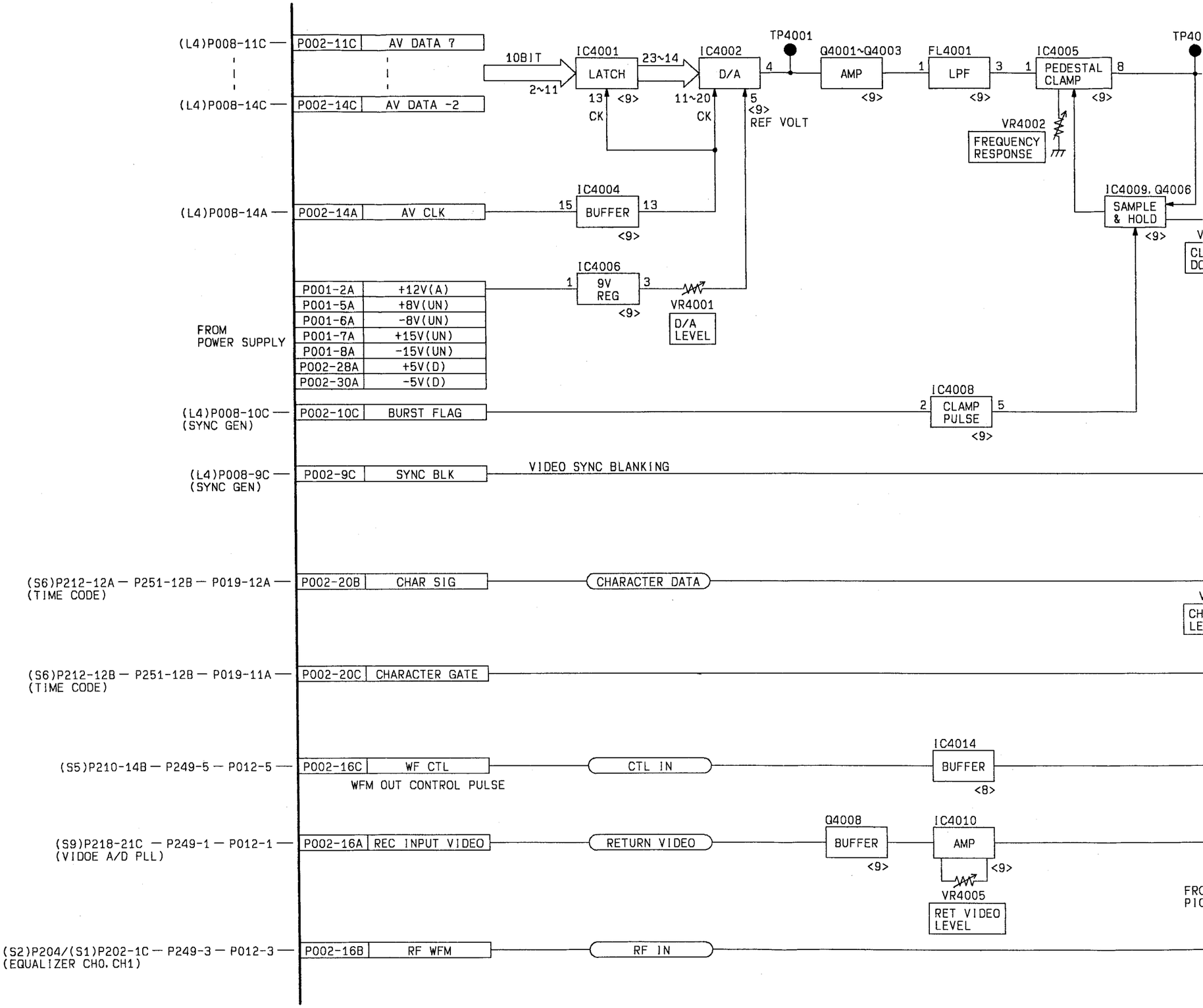

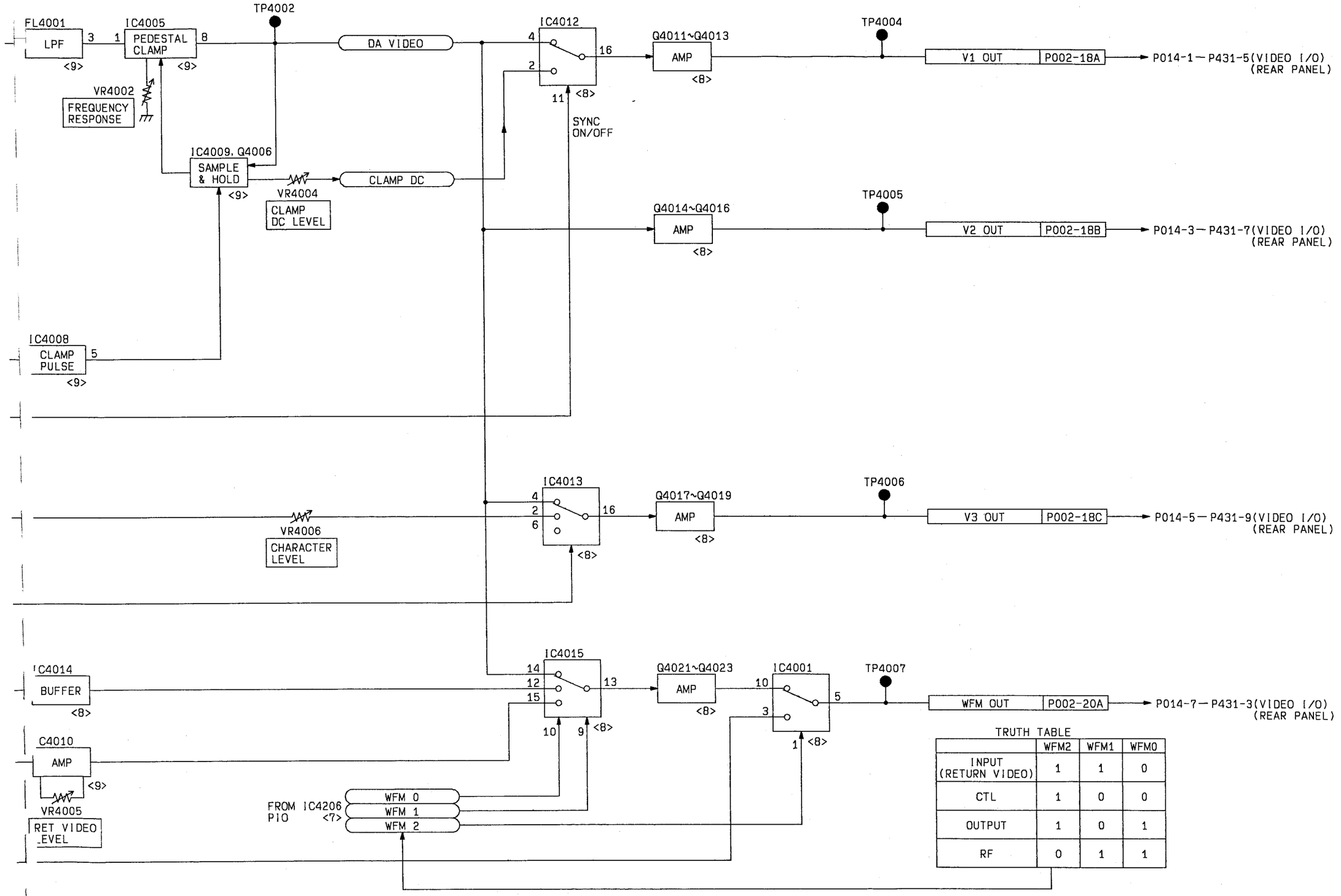

TRUTH TABLE

	WFM2	WFM1	WFM0
INPUT (RETURN VIDEO)	1	1	0
CTL	1	0	0
OUTPUT	1	0	1
RF	0	1	1

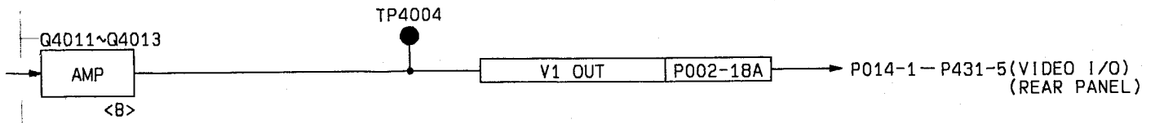

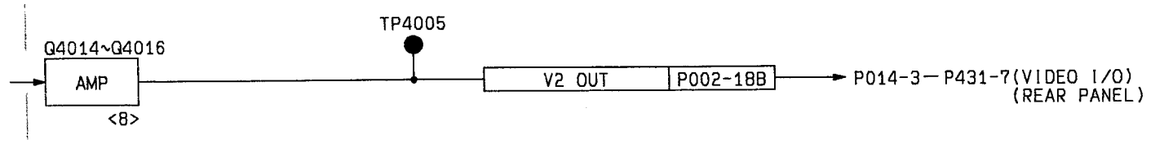

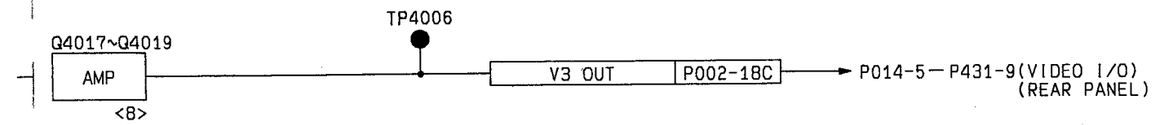

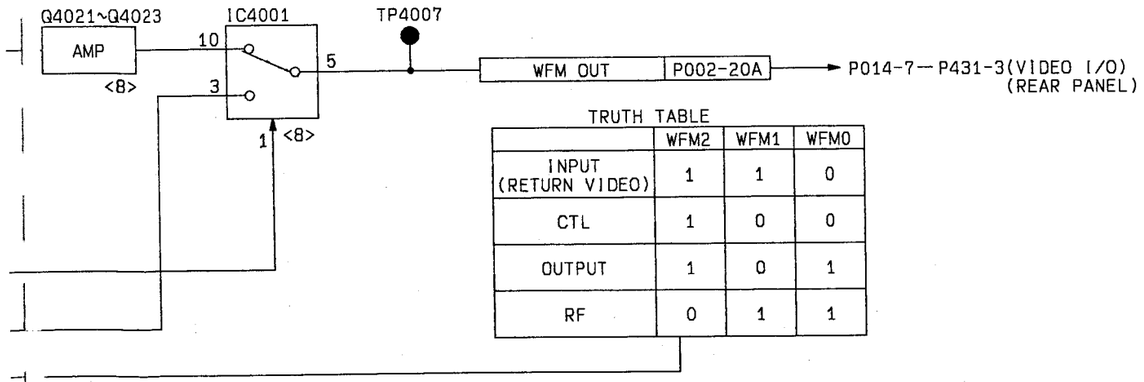

TRUTH TABLE

	WFM2	WFM1	WFM0
INPUT (RETURN VIDEO)	1	1	0
CTL	1	0	0
OUTPUT	1	0	1
RF	0	1	1

L2 VIDEO/AUDIO REC BLOCK DIAGRAM

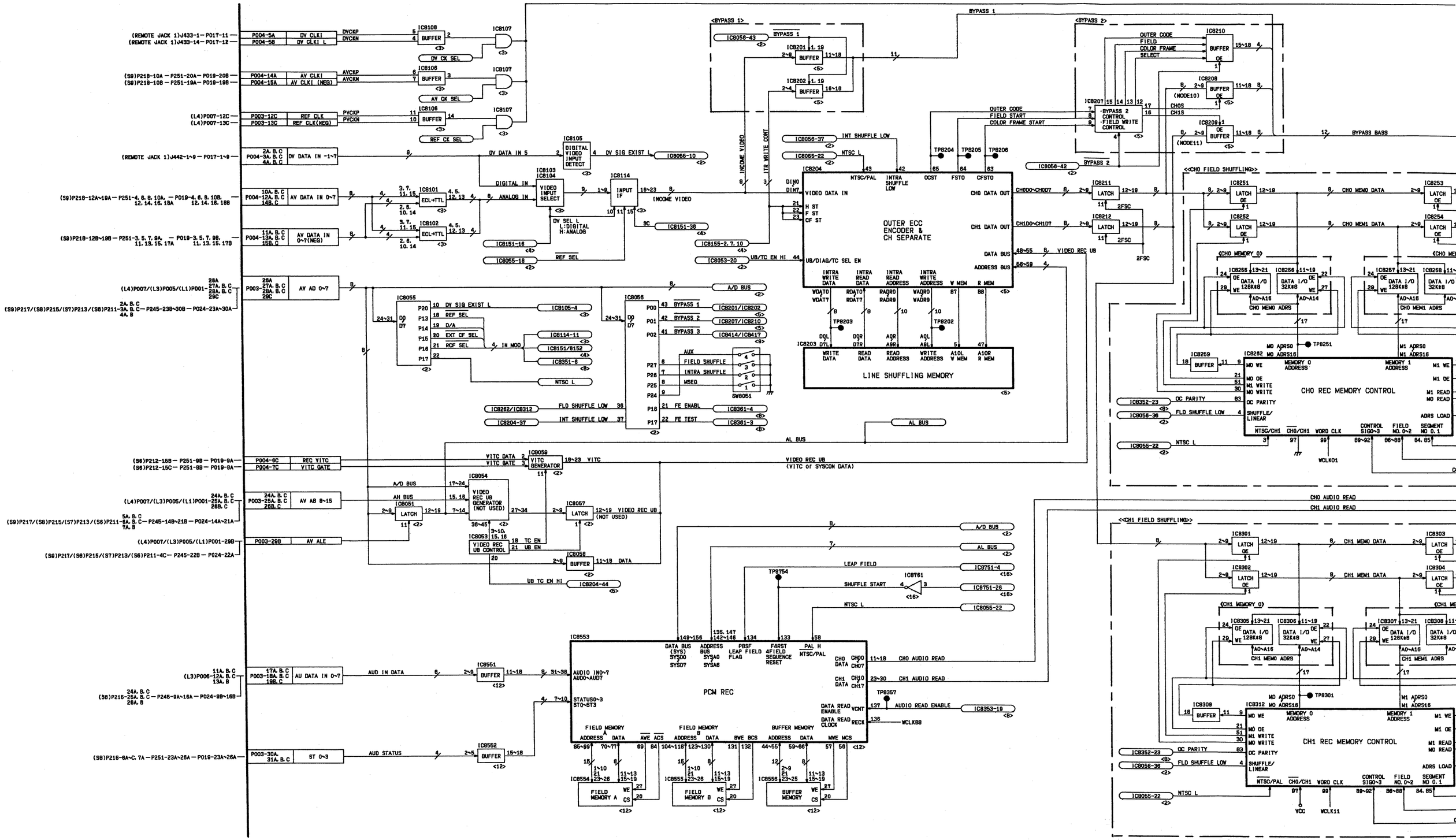

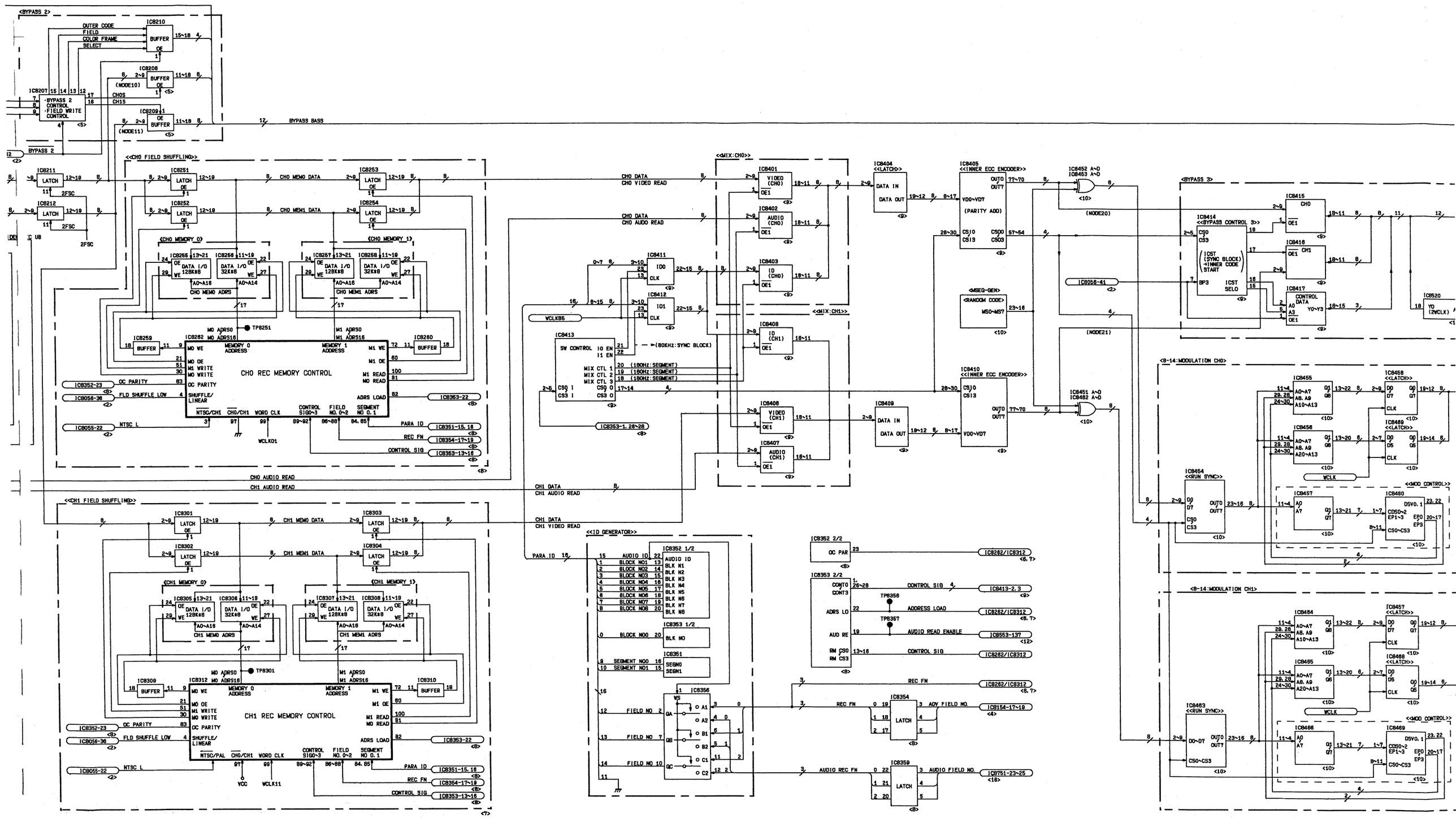

<BYPASS 2>
OUTER CODE
FIELD
COLOR FRAME
SELECT
IC8210
BUFFER
IC8208
IC8207
·BYPASS 2 CONTROL
·FIELD WRITE CONTROL
IC8209
BYPASS BASS
<<CH0 FIELD SHUFFLING>>
IC8211
IC8212
LATCH
2FSC
IC8251
IC8252
IC8253
IC8254
CH0 MEM0 DATA
CH0 MEM1 DATA
<CH0 MEMORY 0>
<CH0 MEMORY 1>
IC8255
IC8256
IC8257
IC8258
DATA I/O 128K*8
DATA I/O 32K*8
CH0 MEM0 ADRS
CH0 MEM1 ADRS
IC8259
IC8260
IC8262
BUFFER
MEMORY 0 ADDRESS
MEMORY 1 ADDRESS
CH0 REC MEMORY CONTROL
OC PARITY
FLD SHUFFLE LOW
NTSC L
PARA ID
REC FN
CONTROL SIG
IC8352-23
IC8056-36
IC8055-22
IC8353-22
IC8351-15, 16
IC8354-17~19
IC8353-13~16
WCLK01
CH0 AUDIO READ
CH1 AUDIO READ
<<CH1 FIELD SHUFFLING>>
IC8301
IC8302
IC8303
IC8304
CH1 MEM0 DATA
CH1 MEM1 DATA
<CH1 MEMORY 0>
<CH1 MEMORY 1>
IC8305
IC8306
IC8307
IC8308
CH1 MEM0 ADRS
CH1 MEM1 ADRS
IC8309
IC8310
IC8312
CH1 REC MEMORY CONTROL
IC8352-23
IC8056-36
IC8055-22
IC8353-22
IC8351-15, 16
IC8354-17~19
IC8353-13~16
VCC
WCLK11
CH0 DATA
CH0 VIDEO READ
CH0 AUDO READ
CH1 DATA
CH1 AUDIO READ
CH1 VIDEO READ
<<MIX:CH0>>
<<MIX:CH1>>
IC8401
IC8402
IC8403
IC8404
IC8405
IC8406
IC8407
IC8408
IC8409
IC8410
IC8411
IC8412
IC8413
VIDEO (CH0)
AUDIO (CH0)
ID (CH0)
ID (CH1)
VIDEO (CH1)
AUDIO (CH1)
DATA IN
DATA OUT
<<INNER ECC ENCODER>>
(PARITY ADD)
<MSEQ-GEN>
<RANDOM CODE>
IC8452 A~D
IC8453 A~D
IC8451 A~D
IC8462 A~D
(NODE20)
(NODE21)
IC8056-41
<BYPASS 3>
IC8414
<<BYPASS CONTROL 3>>
IC8415
IC8416
IC8417
CONTROL DATA
IC8520
YO (2WCLK)
<8-14:MODULATION CH0>
IC8455
IC8456
IC8458
IC8459
<<LATCH>>
IC8454
<<RUN SYNC>>
IC8457
IC8460
<<MOD CONTROL>>
<8-14:MODULATION CH1>
IC8464
IC8465
IC8463
IC8466
IC8468
IC8469
<<ID GENERATOR>>
IC8352 1/2
IC8353 1/2
IC8351
IC8356
IC8352 2/2
IC8353 2/2
IC8354
IC8359
IC8262/IC8312
IC8413-2, 3
IC8553-137
IC8154-17~19
IC8751-23~25
ADDRESS LOAD
AUDIO READ ENABLE
ADV FIELD NO.
AUDIO REC FN
AUDIO FIELD NO.

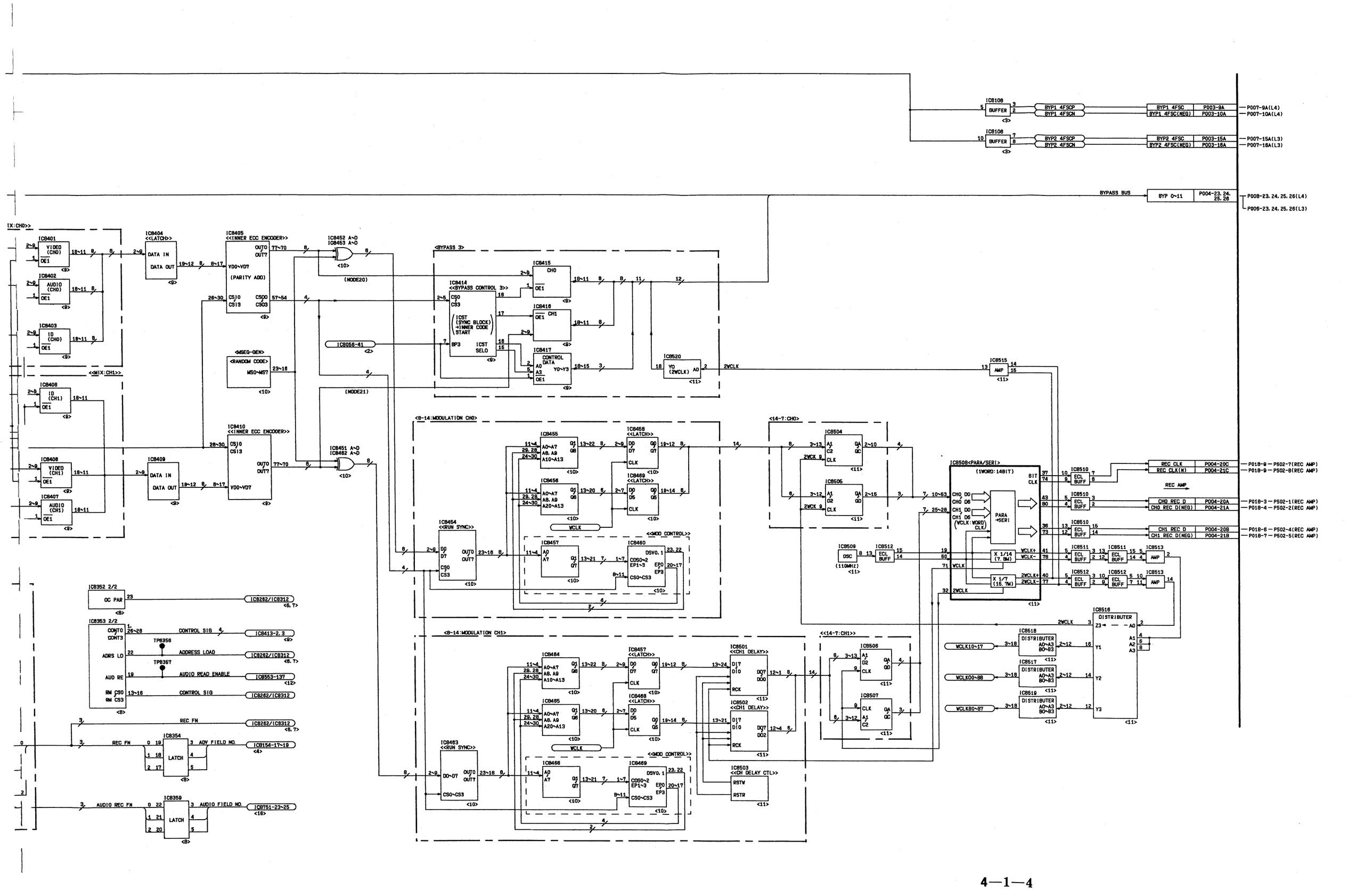
IC8108 BUFFER
BYP1 4FSCP
BYP1 4FSCN
BYP1 4FSC
BYP1 4FSC(NEG)
P003-9A
P003-10A
P007-9A(L4)
P007-10A(L4)
IC8108 BUFFER
BYP2 4FSCP
BYP2 4FSCN
BYP2 4FSC
BYP2 4FSC(NEG)
P003-15A
P003-16A
P007-15A(L3)
P007-16A(L3)
BYPASS BUS
BYP 0~11
P004-23, 24, 25, 26
P008-23, 24, 25, 26(L4)
P006-23, 24, 25, 26(L3)
IX:CH0>>
IC8401 VIDEO (CH0)
IC8402 AUDIO (CH0)
IC8403 ID (CH0)
IC8404 <<LATCH>> DATA IN DATA OUT
IC8405 <<INNER ECC ENCODER>> VD0~VD7 (PARITY ADD)
IC8452 A~D
IC8453 A~D
(NODE20)
<BYPASS 3>
IC8414 <<BYPASS CONTROL 3>>
IC8415 CH0
IC8416 CH1
IC8417 CONTROL DATA
IC8520 YO (2WCLK)
2WCLK
IC8515 AMP
<MIX:CH1>>
IC8408 ID (CH1)
IC8408 VIDEO (CH1)
IC8407 AUDIO (CH1)
IC8409 DATA IN DATA OUT
IC8410 <<INNER ECC ENCODER>>
IC8451 A~D
IC8452 A~D
IC8056-41
<MSEQ-GEN>
<RANDOM CODE>
MS0~MS7
(NODE21)
<8-14:MODULATION CH0>
IC8455
IC8456
IC8457 <<LATCH>>
IC8458 <<LATCH>>
IC8469 <<LATCH>>
IC8464 <<RUN SYNC>>
<<MOD CONTROL>>
IC8460
WCLK
<14-7:CH0>
IC8504
IC8506
IC8508<PARA/SERI> (1WORD:14BIT)
PARA →SERI
CH0 D0~D6
CH1 D0~D6
(WCLK:WORD CLK)
IC8509 OSC (110MHz)
IC8512 ECL BUFF
X 1/14 (7.8M)
X 1/7 (15.7M)
WCLK+
WCLK-
2WCLK+
2WCLK-
WCLK
2WCLK
IC8510 ECL BUFF
IC8511 ECL BUFF
IC8512 ECL BUFF
IC8513 AMP
REC CLK
REC CLK(N)
REC AMP
CH0 REC D
CH0 REC D(NEG)
CH1 REC D
CH1 REC D(NEG)
P004-20C
P004-21C
P004-20A
P004-21A
P004-20B
P004-21B
P018-9 — P502-7(REC AMP)
P018-9 — P502-8(REC AMP)
P018-3 — P502-1(REC AMP)
P018-4 — P502-2(REC AMP)
P018-6 — P502-4(REC AMP)
P018-7 — P502-5(REC AMP)
IC8516 DISTRIBUTER
IC8518 DISTRIBUTER
IC8517 DISTRIBUTER
IC8519 DISTRIBUTER
WCLK10~17
WCLK00~08
WCLK80~87
<8-14:MODULATION CH1>
IC8484
IC8485
IC8457 <<LATCH>>
IC8468 <<LATCH>>
IC8469 <<LATCH>>
IC8463 <<RUN SYNC>>
<<MOD CONTROL>>
IC8466
IC8501 <<CH1 DELAY>>
IC8502 <<CH1 DELAY>>
IC8503 <<CH DELAY CTL>>
RSTW
RSTR
RCK
<14-7:CH1>>
IC8508
IC8507
IC8352 2/2
OC PAR
IC8262/IC8312
IC8353 2/2
CONT0
CONT3
CONTROL SIG
IC8413-2, 3
TP8356
ADDRESS LOAD
TP8367
AUDIO READ ENABLE
IC8553-137
ADRS LO
AUD RE
RM CS0
RM CS3
REC FN
IC8354 LATCH
ADV FIELD NO.
IC8154-17~19
IC8359 LATCH
AUDIO REC FN
AUDIO FIELD NO.
IC8751-23~25

L3 VIDEO/AUDIO PLAYBACK BLOCK DIAGRAM

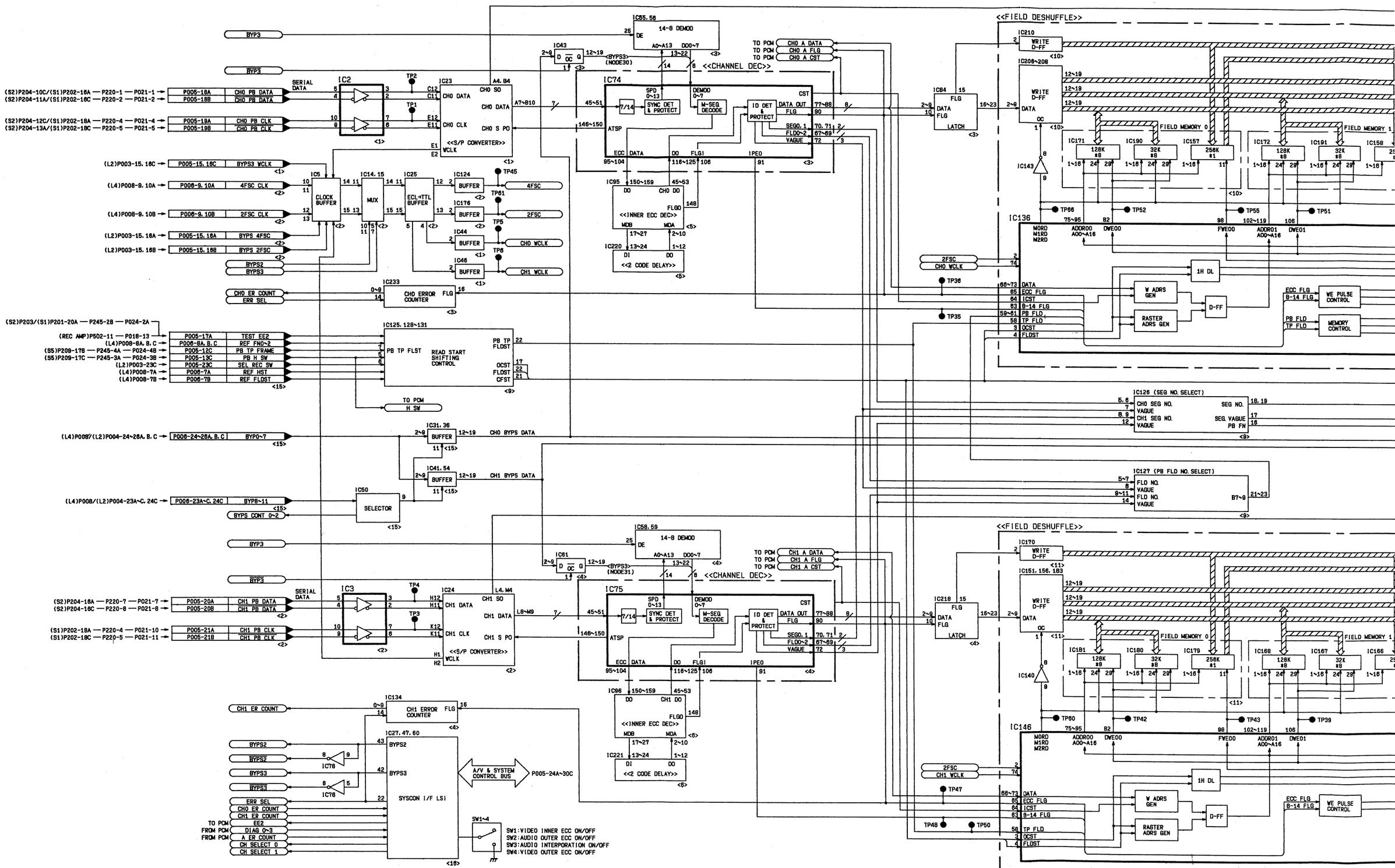

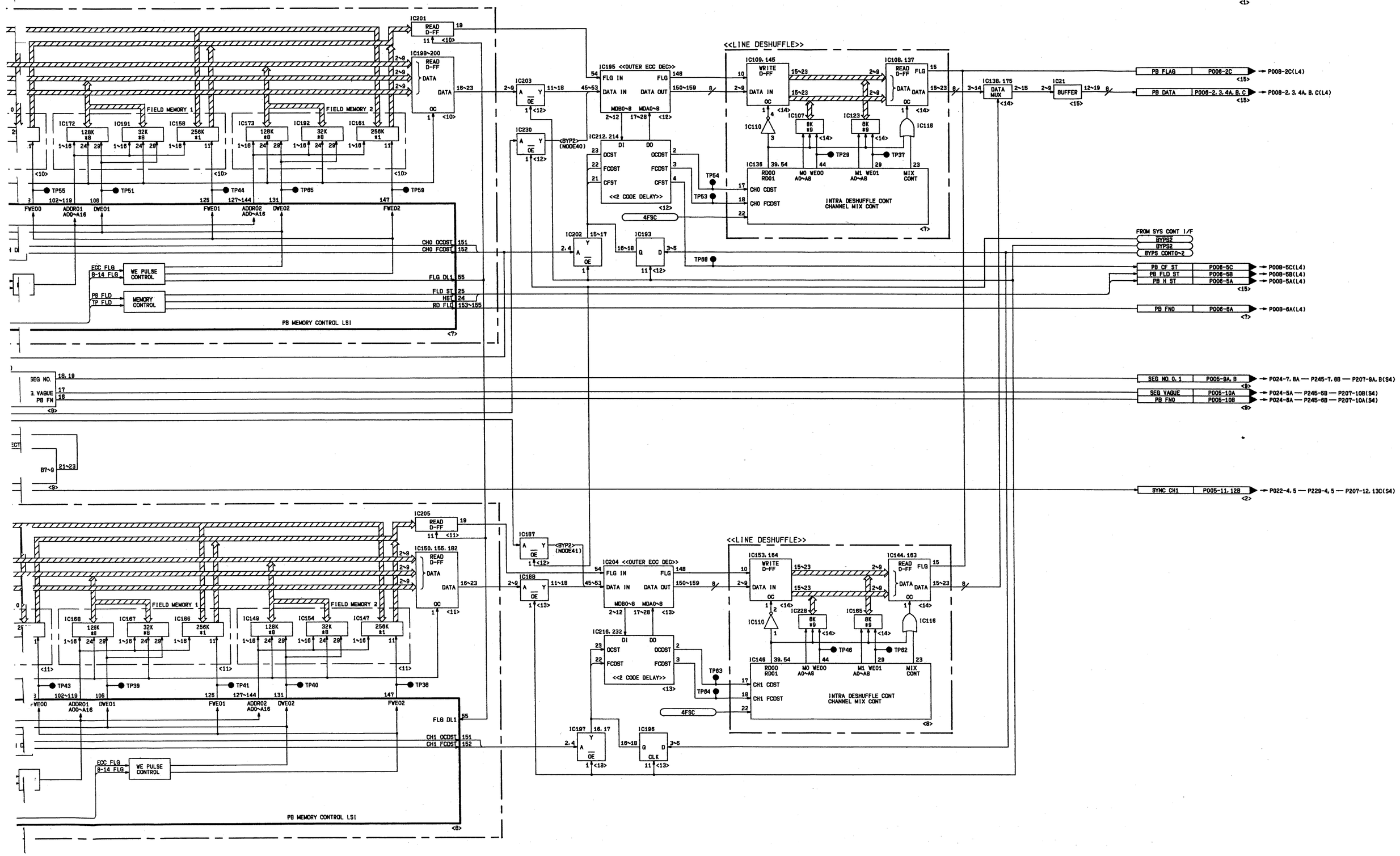
SYNC CH0
P005-11, 12A
P022-1, 2 — P229-1, 2 — P207-9C, 10C(S4)
SYNC CH1
P005-11, 12B
P022-4, 5 — P229-4, 5 — P207-12, 13C(S4)
<<LINE DESHUFFLE>>
IC201
IC198~200
IC203
IC230
IC195 <<OUTER ECC DEC>>
IC204 <<OUTER ECC DEC>>
IC212, 214
IC216, 232
<<2 CODE DELAY>>
IC109, 145
IC108, 137
IC136
IC146
IC110
IC116
IC107
IC123
IC228
IC165
IC138, 175
IC21
PB FLAG
PB DATA
P008-2C
P008-2, 3, 4A, B, C
FIELD MEMORY 1
FIELD MEMORY 2
IC172
IC191
IC158
IC173
IC192
IC161
IC168
IC167
IC166
IC149
IC154
IC147
128K ×8
32K ×8
256K ×1
TP55
TP51
TP44
TP65
TP59
TP43
TP39
TP41
TP40
TP38
FWE00
ADDR01 A00~A16
DWE01
FWE01
ADDR02 A00~A16
DWE02
FWE02
CH0 OCDST 151
CH0 FCDST 152
CH1 OCDST 151
CH1 FCDST 152
FLG DL1 55
FLD ST 25
HST 24
RD FLD 153~155
ECC FLG
8-14 FLG
WE PULSE CONTROL
PB FLD
TP FLD
MEMORY CONTROL
PB MEMORY CONTROL LSI
4FSC
TP53
TP54
TP63
TP64
TP68
TP29
TP37
TP46
TP62
IC202
IC193
IC197
IC196
FROM SYS CONT I/F
BYPS2
BYPS2
BYPS CONT0~2
PB CF ST
PB FLD ST
PB H ST
P008-5C
P008-5B
P008-5A
PB FNO
P008-6A
SEG NO. 18, 19
3. VAGUE PB FN 17, 16
SEG NO. 0, 1
SEG VAGUE
PB FNO
P005-9A, B
P005-10A
P005-10B
P024-7, 8A — P245-7, 8B — P207-9A, B(S4)
P024-5A — P245-5B — P207-10B(S4)
P024-6A — P245-8B — P207-10A(S4)
B7~8 21~23
INTRA DESHUFFLE CONT
CHANNEL MIX CONT

L3 VIDEO/AUDIO PLAYBACK BLOCK DIAGRAM (PCM PROCESS)

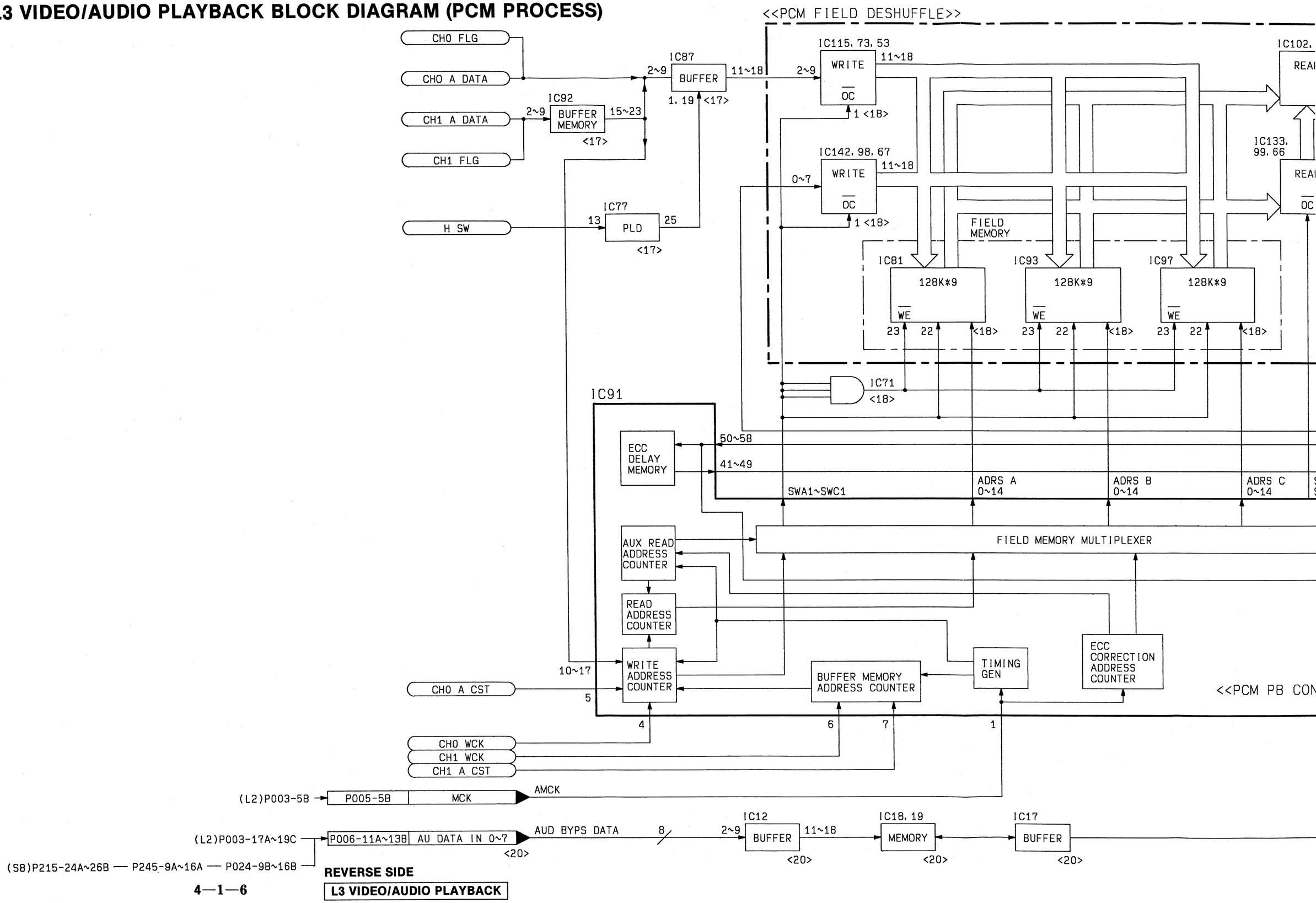

REVERSE SIDE

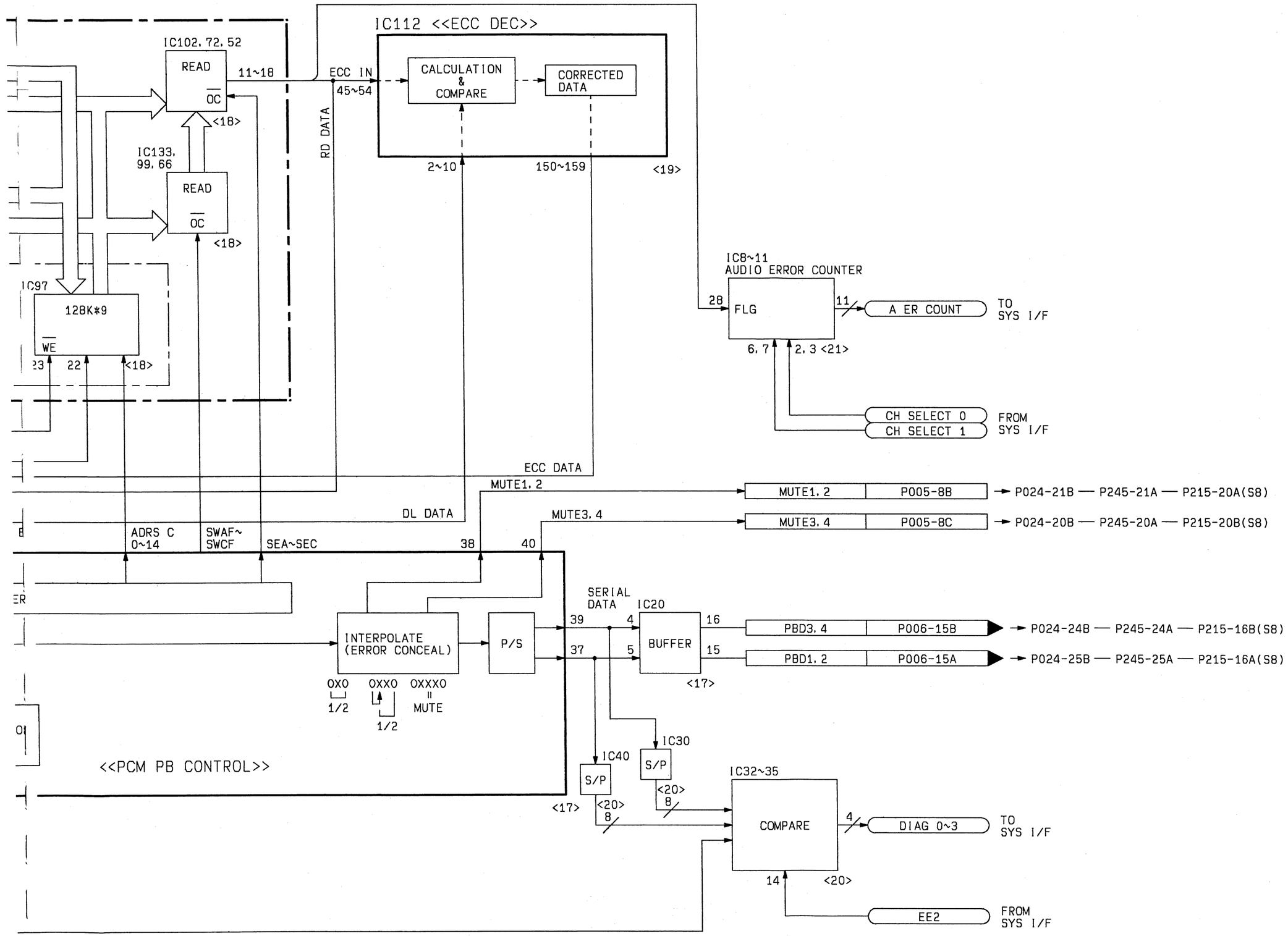
IC112 <<ECC DEC>>
IC102, 72, 52
READ
OC
11~18
ECC IN
45~54
CALCULATION & COMPARE
CORRECTED DATA
RD DATA
<18>
IC133, 99, 66
READ
OC
<18>
2~10
150~159
<19>
IC97
128K*9
WE
23
22
<18>
IC8~11
AUDIO ERROR COUNTER
28
FLG
11
A ER COUNT
TO SYS I/F
6, 7
2, 3 <21>
CH SELECT 0
CH SELECT 1
FROM SYS I/F
ECC DATA
MUTE1, 2
MUTE1, 2
P005-8B
P024-21B — P245-21A — P215-20A(S8)
DL DATA
MUTE3, 4
MUTE3, 4
P005-8C
P024-20B — P245-20A — P215-20B(S8)
ADRS C 0~14
SWAF~ SWCF
SEA~SEC
38
40
SERIAL DATA
IC20
INTERPOLATE (ERROR CONCEAL)
P/S
39
37
4
5
BUFFER
16
15
PBD3, 4
P006-15B
P024-24B — P245-24A — P215-16B(S8)
PBD1, 2
P006-15A
P024-25B — P245-25A — P215-16A(S8)
<17>
0X0
1/2
0XX0
1/2
0XXX0
MUTE
IC40
S/P
IC30
S/P
<17>
<20>
8
<20>
8
IC32~35
COMPARE
4
DIAG 0~3
TO SYS I/F
14
<20>
EE2
FROM SYS I/F
<<PCM PB CONTROL>>

L4 VIDEO PROCESS BLOCK DIAGRAM

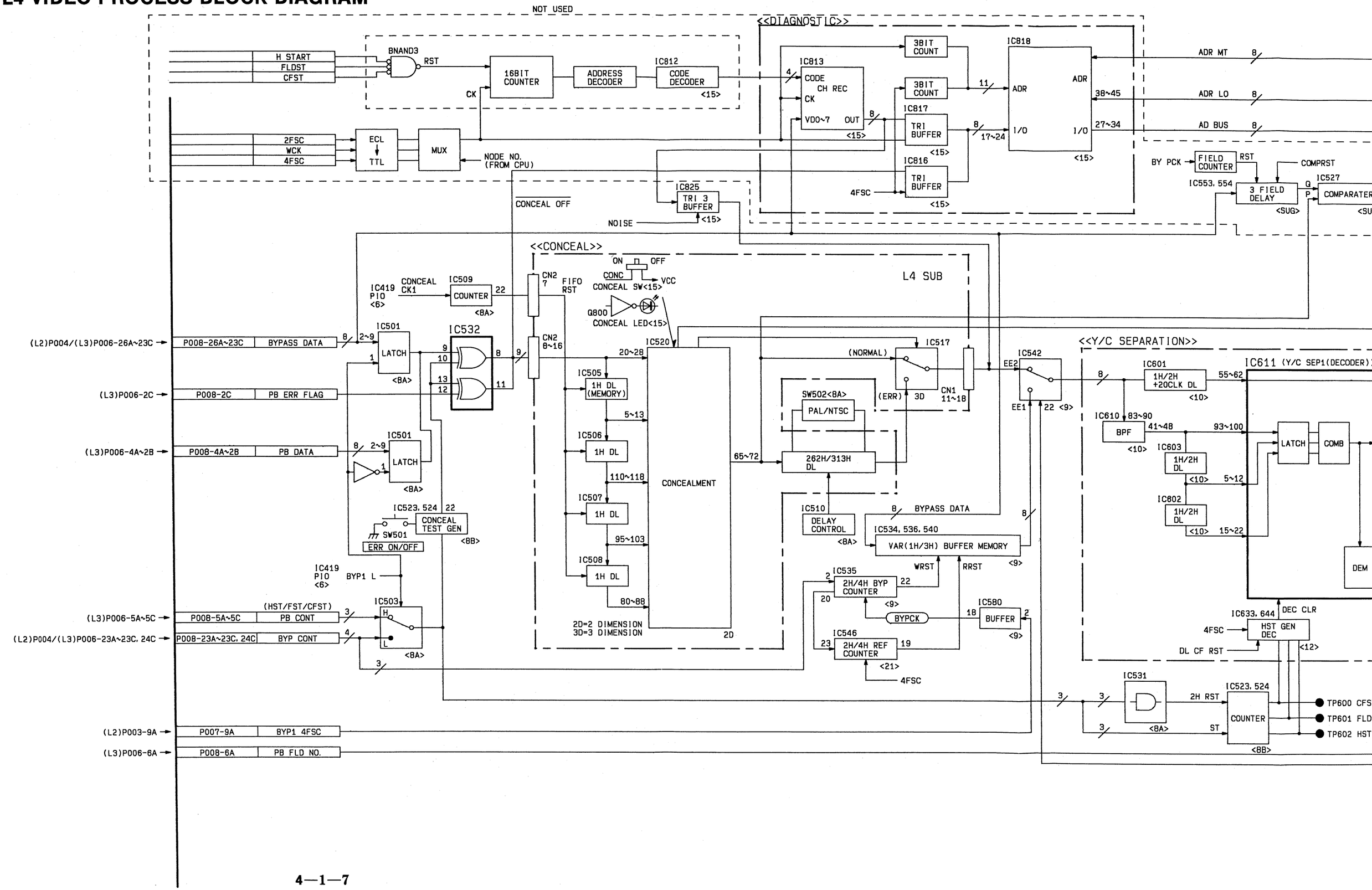

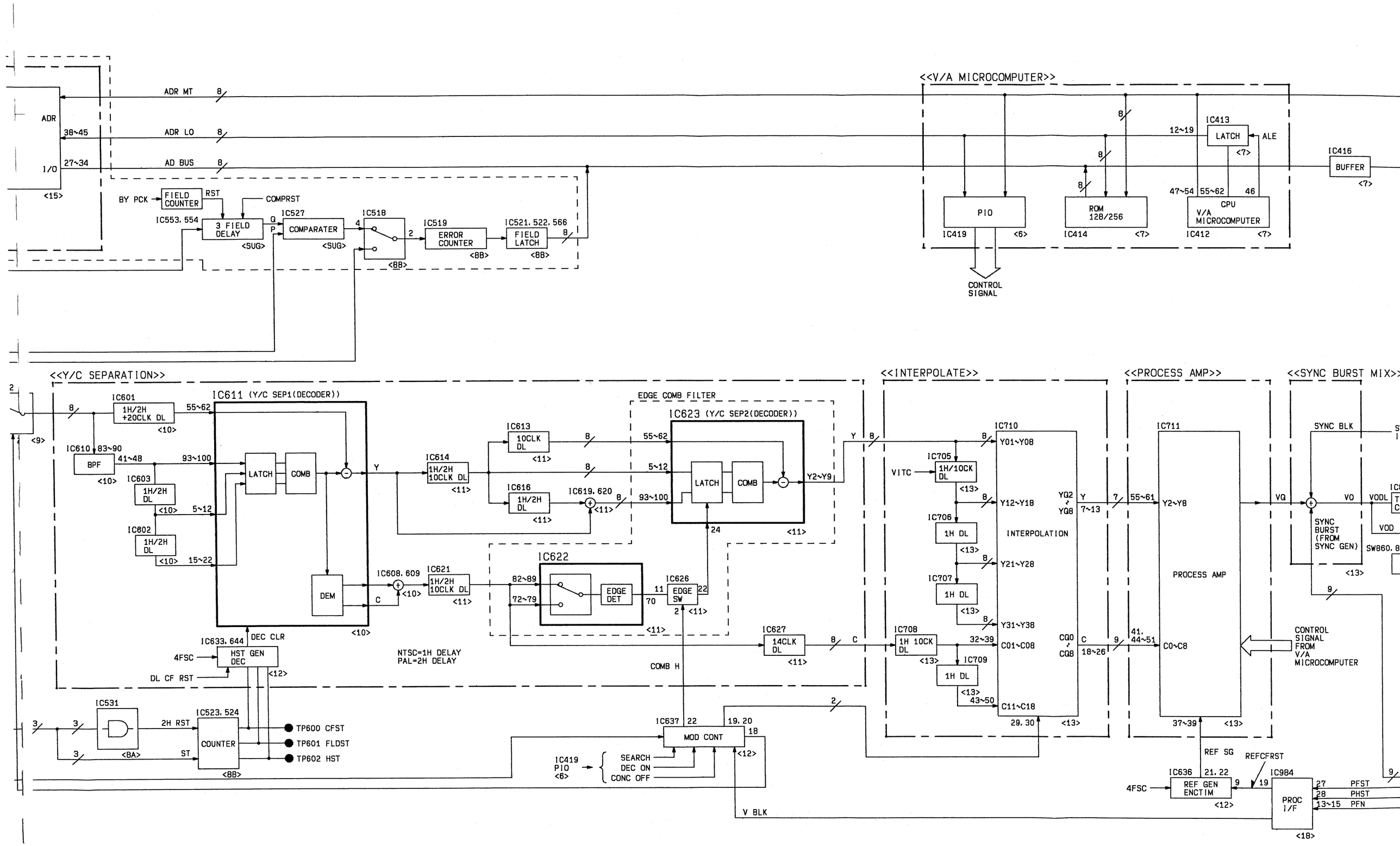

<<V/A MICROCOMPUTER>>
ADR MT
ADR LO
AD BUS
ADR
I/O
BY PCK
FIELD COUNTER
RST
COMPRST
IC553, 554
3 FIELD DELAY
IC527
COMPARATER
IC518
IC519
ERROR COUNTER
IC521, 522, 566
FIELD LATCH
IC413
LATCH
ALE
IC416
BUFFER
PIO
IC419
ROM 128/256
IC414
CPU
V/A MICROCOMPUTER
IC412
CONTROL SIGNAL
<<Y/C SEPARATION>>
IC601
1H/2H +20CLK DL
IC611 (Y/C SEP1(DECODER))
IC610
BPF
IC603
1H/2H DL
IC602
1H/2H DL
LATCH
COMB
DEM
IC614
1H/2H 10CLK DL
IC613
10CLK DL
IC616
1H/2H DL
IC619, 620
EDGE COMB FILTER
IC623 (Y/C SEP2(DECODER))
IC608, 609
IC621
1H/2H 10CLK DL
IC622
EDGE DET
IC626
EDGE SW
IC627
14CLK DL
IC633, 644
HST GEN DEC
DEC CLR
4FSC
DL CF RST
NTSC=1H DELAY
PAL=2H DELAY
COMB H
IC531
IC523, 524
COUNTER
2H RST
ST
TP600 CFST
TP601 FLDST
TP602 HST
IC637
MOD CONT
IC419 PIO
SEARCH
DEC ON
CONC OFF
V BLK
<<INTERPOLATE>>
IC710
INTERPOLATION
IC705
1H/10CK DL
VITC
IC706
1H DL
IC707
1H DL
IC708
1H 10CK DL
IC709
1H DL
Y01~Y08
Y12~Y18
Y21~Y28
Y31~Y38
C01~C08
C11~C18
<<PROCESS AMP>>
IC711
PROCESS AMP
C0~C8
CONTROL SIGNAL FROM V/A MICROCOMPUTER
REF SG
REFCFRST
IC636
REF GEN ENCTIM
4FSC
IC984
PROC I/F
PFST
PHST
PFN
<<SYNC BURST MIX>>
SYNC BLK
SYNC BURST (FROM SYNC GEN)
VO
VODL
VOD
SW860, 8

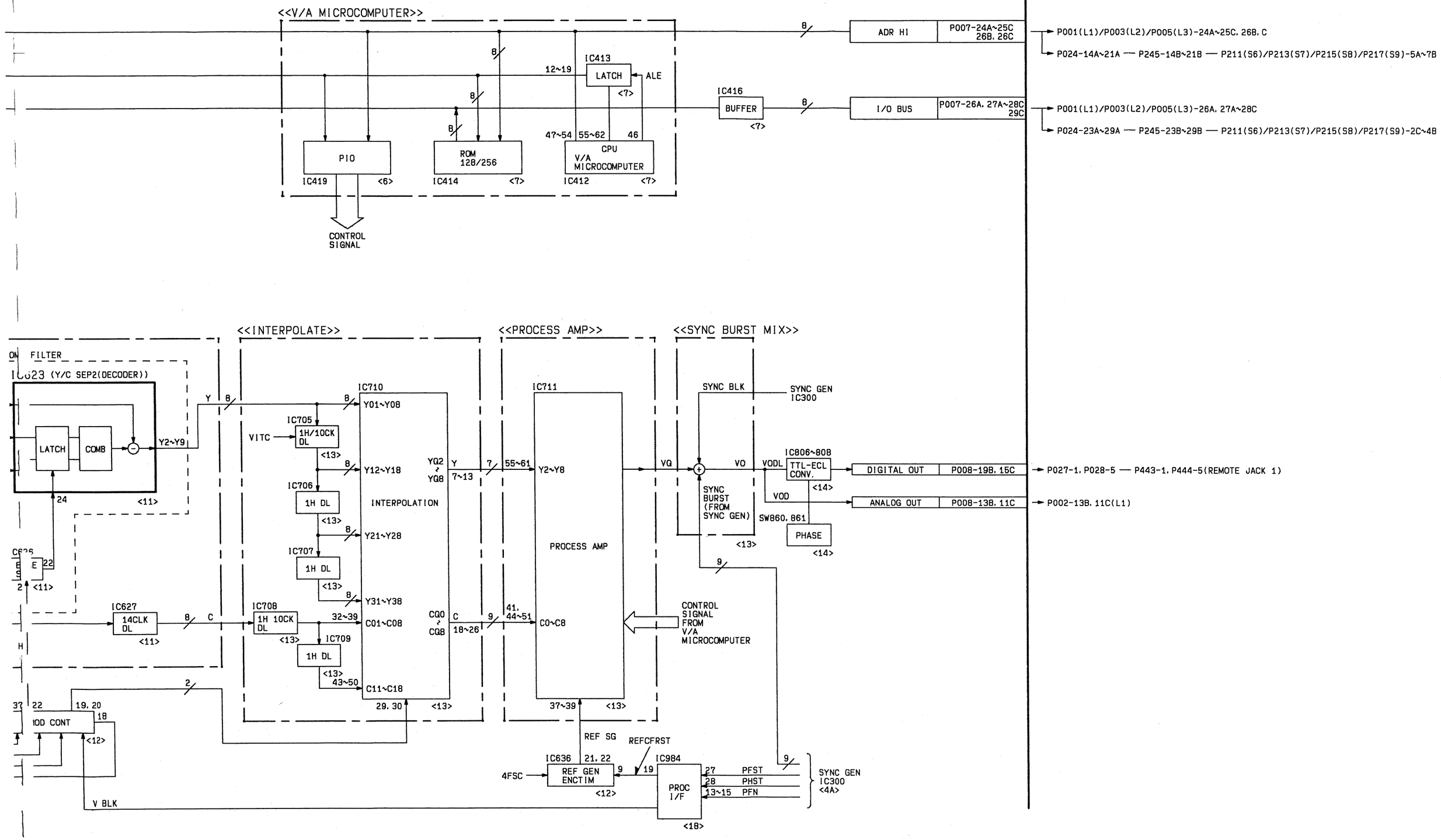
<<V/A MICROCOMPUTER>>
8
ADR HI
P007-24A~25C 26B, 26C
P001(L1)/P003(L2)/P005(L3)-24A~25C, 26B, C
P024-14A~21A — P245-14B~21B — P211(S6)/P213(S7)/P215(S8)/P217(S9)-5A~7B
IC413
12~19
LATCH
ALE
<7>
IC416
BUFFER
<7>
I/O BUS
P007-26A, 27A~28C 29C
P001(L1)/P003(L2)/P005(L3)-26A, 27A~28C
P024-23A~29A — P245-23B~29B — P211(S6)/P213(S7)/P215(S8)/P217(S9)-2C~4B
47~54
55~62
46
PIO
IC419
<6>
ROM 128/256
IC414
<7>
CPU V/A MICROCOMPUTER
IC412
<7>
CONTROL SIGNAL
<<INTERPOLATE>>
<<PROCESS AMP>>
<<SYNC BURST MIX>>
ON FILTER
IC623 (Y/C SEP2(DECODER))
LATCH
COMB
Y2~Y9
24
<11>
Y
IC710
Y01~Y08
IC705
1H/10CK DL
VITC
<13>
Y12~Y18
IC706
1H DL
INTERPOLATION
Y21~Y28
IC707
1H DL
Y31~Y38
IC627
14CLK DL
<11>
IC708
1H 10CK DL
32~39
C01~C08
IC709
1H DL
43~50
C11~C18
29, 30
<13>
YQ2 ~ YQ8
Y
7~13
7
55~61
Y2~Y8
CQ0 ~ CQ8
C
18~26
9
41, 44~51
C0~C8
37~39
IC711
PROCESS AMP
CONTROL SIGNAL FROM V/A MICROCOMPUTER
SYNC BLK
SYNC GEN IC300
VQ
VO
SYNC BURST (FROM SYNC GEN)
VODL
IC806~808
TTL-ECL CONV.
<14>
DIGITAL OUT
P008-19B, 15C
P027-1, P028-5 — P443-1, P444-5(REMOTE JACK 1)
VOD
ANALOG OUT
P008-13B, 11C
P002-13B, 11C(L1)
SW860, 861
PHASE
<14>
REF SG
REFCFRST
IC636
21, 22
REF GEN ENCTIM
<12>
4FSC
IC984
PROC I/F
<18>
27
PFST
28
PHST
13~15
PFN
SYNC GEN IC300 <4A>
V BLK
IOD CONT
<12>

L4 SYNC GENERATOR BLOCK DIAGRAM

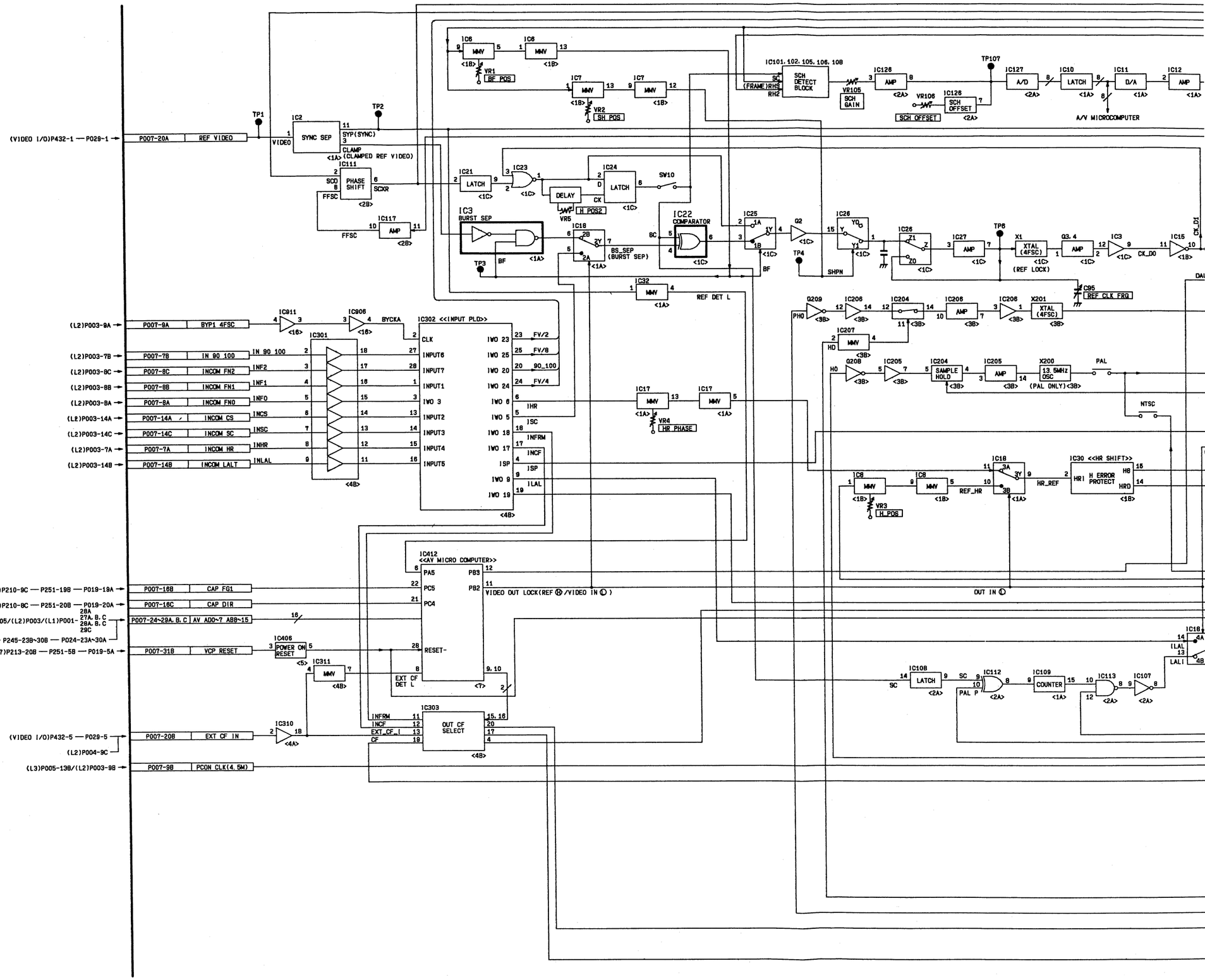

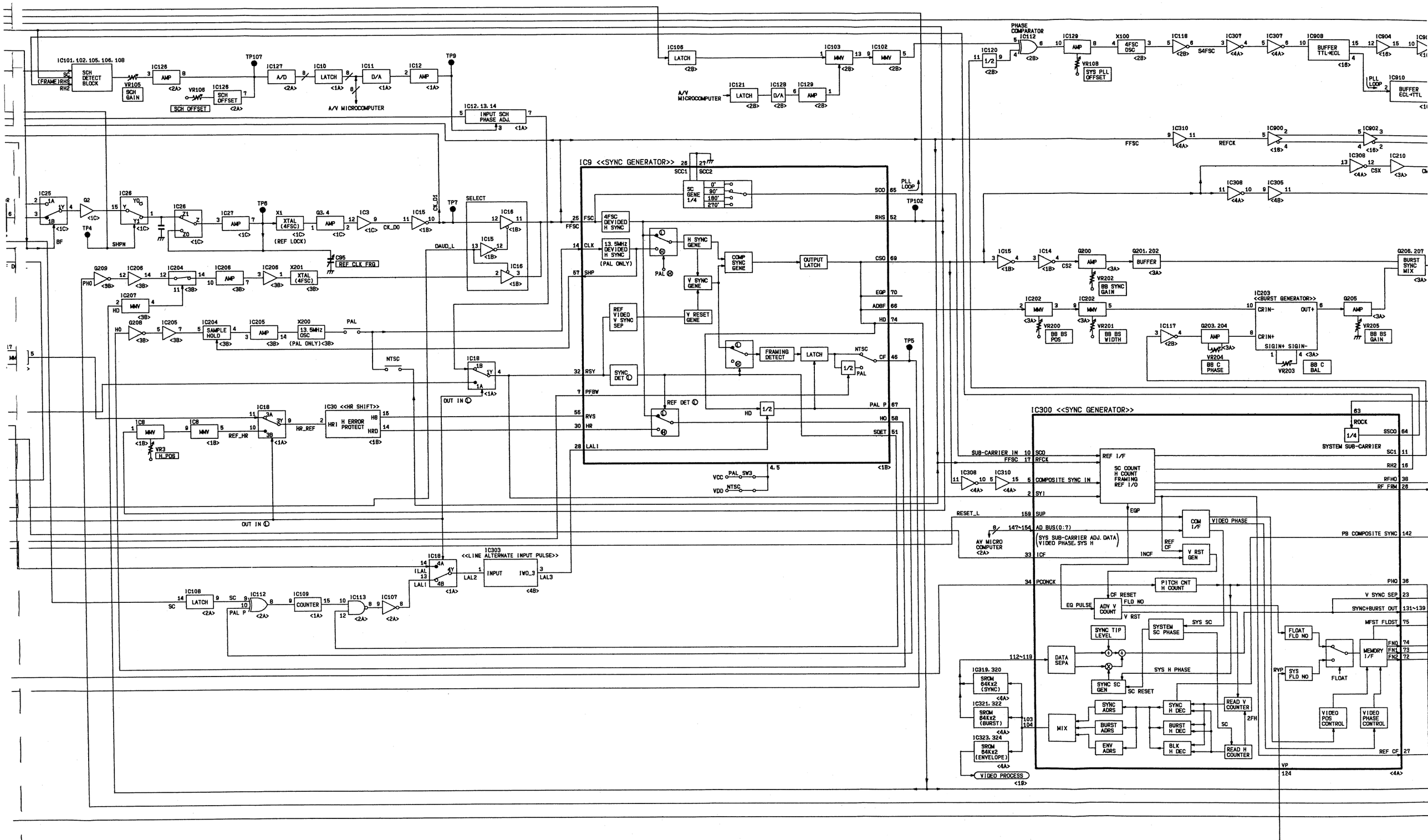
IC9 <<SYNC GENERATOR>>
IC300 <<SYNC GENERATOR>>
IC101, 102, 105, 106, 108
SCH DETECT BLOCK
IC126
AMP
IC127
A/D
IC10
LATCH
IC11
D/A
IC12
AMP
IC12, 13, 14
INPUT SCH PHASE ADJ.
A/V MICROCOMPUTER
IC106
LATCH
IC103
MMV
IC102
MMV
IC121
LATCH
IC128
D/A
IC129
AMP
PHASE COMPARATOR
IC112
IC120
1/2
IC129
AMP
X100
4FSC OSC
IC118
IC307
IC307
IC908
BUFFER TTL→ECL
IC904
IC910
BUFFER ECL→TTL
IC310
IC900
IC902
IC308
IC210
IC308
IC305
IC25
IC26
IC27
AMP
X1
XTAL (4FSC)
(REF LOCK)
IC3
IC15
IC16
IC15
IC16
SELECT
DAUD_L
C95
REF CLK FRQ
IC204
IC206
AMP
IC206
X201
XTAL (4FSC)
IC207
MMV
IC205
IC204
SAMPLE HOLD
IC205
AMP
X200
13.5MHz OSC
(PAL ONLY)
PAL
NTSC
IC18
OUT IN
IC8
MMV
IC8
MMV
IC18
IC30 <<HR SHIFT>>
H ERROR PROTECT
HR1
HR_REF
REF_HR
VR3
H_POS
IC108
LATCH
IC112
IC109
COUNTER
IC113
IC107
IC18
IC303
<<LINE ALTERNATE INPUT PULSE>>
INPUT
IWO_3
SC GENE 1/4
4FSC DEVIDED H SYNC
13.5MHz DEVIDED H SYNC
(PAL ONLY)
H SYNC GENE
V SYNC GENE
V RESET GENE
COMP SYNC GENE
OUTPUT LATCH
REF VIDEO V SYNC SEP
SYNC DET
FRAMING DETECT
LATCH
REF DET
PLL LOOP
TP102
TP5
TP4
TP6
TP7
TP9
TP107
TP102
SUB-CARRIER IN
FFSC
RFCK
COMPOSITE SYNC IN
SYI
RESET_L
AD BUS(0:7)
AV MICRO COMPUTER
(SYS SUB-CARRIER ADJ. DATA VIDEO PHASE, SYS H)
ICF
PCONCK
REF I/F
SC COUNT
H COUNT
FRAMING
REF I/O
EQP
COM I/F
VIDEO PHASE
REF CF
V RST GEN
INCF
PITCH CNT H COUNT
CF RESET
EQ PULSE
ADV V COUNT
FLD NO
V RST
SYNC TIP LEVEL
SYSTEM SC PHASE
SYS SC
DATA SEPA
SYS H PHASE
SYNC SC GEN
SC RESET
MIX
SYNC ADRS
BURST ADRS
ENV ADRS
SYNC H DEC
BURST H DEC
BLK H DEC
READ V COUNTER
READ H COUNTER
2FH
SC
IC319, 320
SROM 64Kx2 (SYNC)
IC321, 322
SROM 64Kx2 (BURST)
IC323, 324
SROM 64Kx2 (ENVELOPE)
VIDEO PROCESS
IC203
<<BURST GENERATOR>>
CRIN-
OUT+
CRIN+
SIGIN+
SIGIN-
IC117
Q203, 204
AMP
VR204
BB C PHASE
VR203
BB C BAL
Q205
AMP
VR205
BB BS GAIN
Q206, 207
BURST SYNC MIX
IC202
MMV
IC202
MMV
VR200
BB BS POS
VR201
BB BS WIDTH
IC15
IC14
Q200
AMP
VR202
BB SYNC GAIN
Q201, 202
BUFFER
IC308
IC310
SYSTEM SUB-CARRIER
ROCK
SSCO
SC1
RH2
RFHO
RF FRM
PB COMPOSITE SYNC
PHO
V SYNC SEP
SYNC+BURST OUT
MFST FLDST
FLOAT FLD NO
SYS FLD NO
FLOAT
MEMORY I/F
FN0
FN1
FN2
RVP
VIDEO POS CONTROL
VIDEO PHASE CONTROL
REF CF
VP

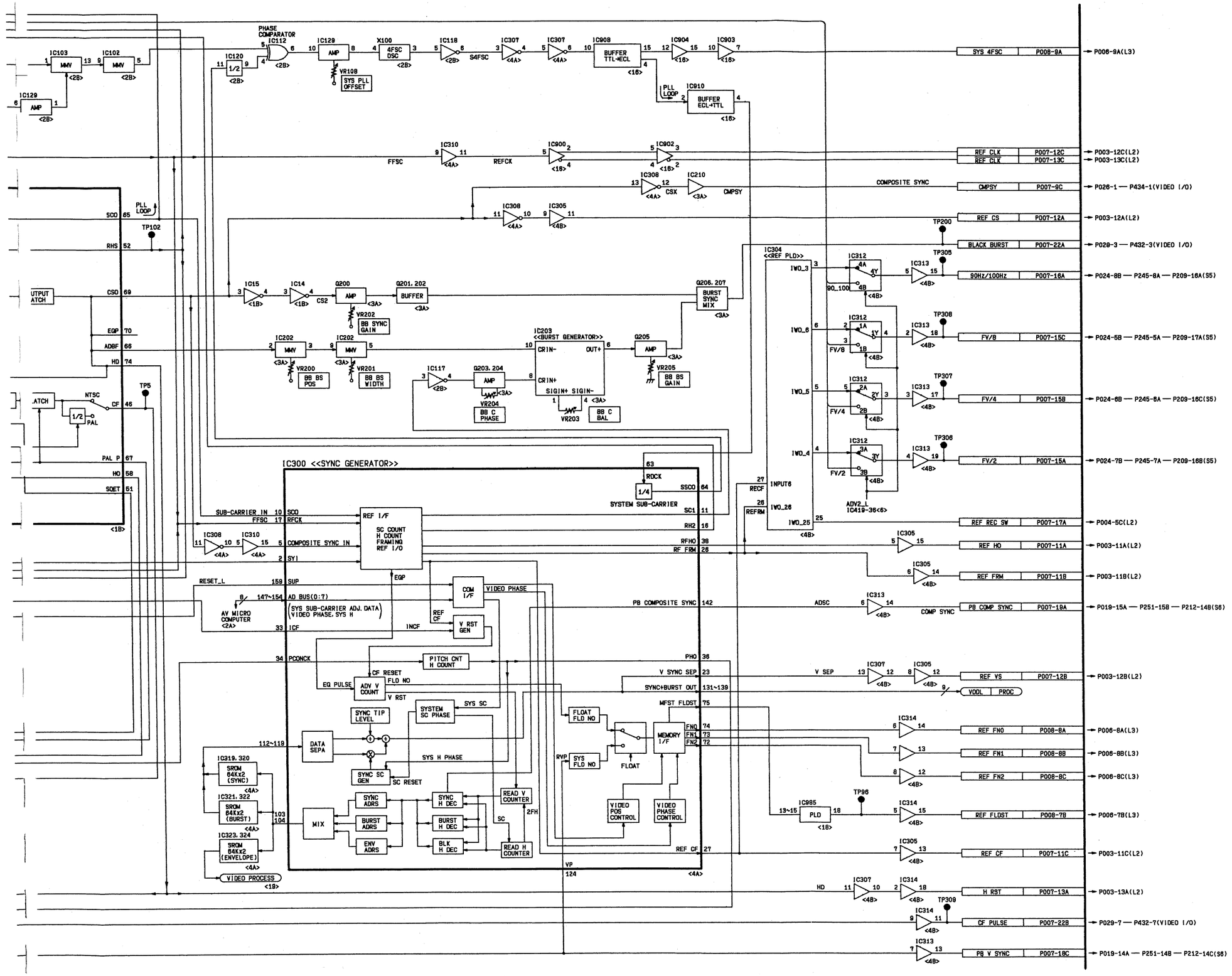
PHASE COMPARATOR IC112
IC103 MMV
IC102 MMV
IC129 AMP
IC120 1/2
X100 4FSC OSC
IC118
IC307
IC908 BUFFER TTL→ECL
IC904
IC903
VR108 SYS PLL OFFSET
S4FSC
PLL LOOP
IC910 BUFFER ECL→TTL
SYS 4FSC
P008-9A
P006-9A(L3)
IC310
IC900
IC902
FFSC
REFCK
REF CLK
P007-12C
P003-12C(L2)
P007-13C
P003-13C(L2)
IC308
IC210
CSX
CMPSY
COMPOSITE SYNC
P026-1 — P434-1(VIDEO I/O)
IC305
REF CS
P007-12A
P003-12A(L2)
TP102
TP200
BLACK BURST
P028-3 — P432-3(VIDEO I/O)
IC15
IC14
Q200 AMP
Q201, 202 BUFFER
Q205, 207 BURST SYNC MIX
CS2
VR202 BB SYNC GAIN
IC304 <<REF PLD>>
IC312
IC313
TP305
90Hz/100Hz
P007-16A
P024-8B — P245-8A — P209-16A(S5)
IC202 MMV
VR200 BB BS POS
VR201 BB BS WIDTH
IC203 <<BURST GENERATOR>>
Q205 AMP
VR205 BB BS GAIN
IC117
Q203, 204 AMP
VR204 BB C PHASE
VR203
BB C BAL
TP308
FV/8
P007-15C
P024-5B — P245-5A — P209-17A(S5)
TP307
FV/4
P007-15B
P024-6B — P245-8A — P209-16C(S5)
TP306
FV/2
P007-15A
P024-7B — P245-7A — P209-16B(S5)
NTSC
PAL
CF
IC300 <<SYNC GENERATOR>>
ROCK
SSCO
SYSTEM SUB-CARRIER
SUB-CARRIER IN
FFSC
REF I/F
SC COUNT
H COUNT
FRAMING
REF I/O
SC1
RH2
RFHO
RF FRM
REF HO
P007-11A
P003-11A(L2)
REF FRM
P007-11B
P003-11B(L2)
IC308
IC310
COMPOSITE SYNC IN
SYI
RESET_L
SUP
AD BUS(0:7)
AV MICRO COMPUTER <2A>
(SYS SUB-CARRIER ADJ. DATA VIDEO PHASE, SYS H)
COM I/F
VIDEO PHASE
REF CF
V RST GEN
INCF
ICF
PB COMPOSITE SYNC
ADSC
PB COMP SYNC
P007-19A
P019-15A — P251-15B — P212-14B(S8)
PCONCK
PITCH CNT
H COUNT
CF RESET
FLD NO
ADV V COUNT
EQ PULSE
V RST
V SYNC SEP
V SEP
REF VS
P007-12B
P003-12B(L2)
SYNC+BURST OUT
VDOL
PROC
SYNC TIP LEVEL
SYSTEM SC PHASE
SYS SC
MFST FLDST
FLOAT FLD NO
SYS FLD NO
FLOAT
MEMORY I/F
FN0
FN1
FN2
REF FN0
P008-8A
P006-8A(L3)
REF FN1
P008-8B
P006-8B(L3)
REF FN2
P008-8C
P006-8C(L3)
DATA SEPA
SYS H PHASE
SYNC SC GEN
SC RESET
IC319, 320 SROM 64Kx2 (SYNC)
IC321, 322 SROM 64Kx2 (BURST)
IC323, 324 SROM 64Kx2 (ENVELOPE)
SYNC ADRS
BURST ADRS
ENV ADRS
SYNC H DEC
BURST H DEC
BLK H DEC
READ V COUNTER
READ H COUNTER
MIX
VIDEO POS CONTROL
VIDEO PHASE CONTROL
IC985 PLD
TP96
REF FLDST
P008-7B
P006-7B(L3)
REF CF
P007-11C
P003-11C(L2)
VIDEO PROCESS
HD
IC307
IC314
H RST
P007-13A
P003-13A(L2)
TP309
CF PULSE
P007-22B
P029-7 — P432-7(VIDEO I/O)
PB V SYNC
P007-18C
P019-14A — P251-14B — P212-14C(S8)
IC305
REF REC SW
P007-17A
P004-5C(L2)
ADV2_L IC419-36<6>
INPUT6
IWO_3
IWO_6
IWO_5
IWO_4
IWO_26
IWO_25
90_100
FV/8
FV/4
FV/2
RECF
REFRM
SCO
RFCK
SYI
SUP
ICF
PCONCK
RVP
VP
SYNC H DEC
SYNC ADRS
BURST H DEC
BURST ADRS
BLK H DEC
ENV ADRS
SC
2FH
REF CF
SCO
RHS
CSO
EQP
ADBF
HD
PAL P
HO
SDET
PLL LOOP
TP5
1/2 PAL
1/4
<1B>
<2B>
<3A>
<4A>
<4B>

S1, S2 EQUALIZER CH0 (CH1) BLOCK DIAGARAM

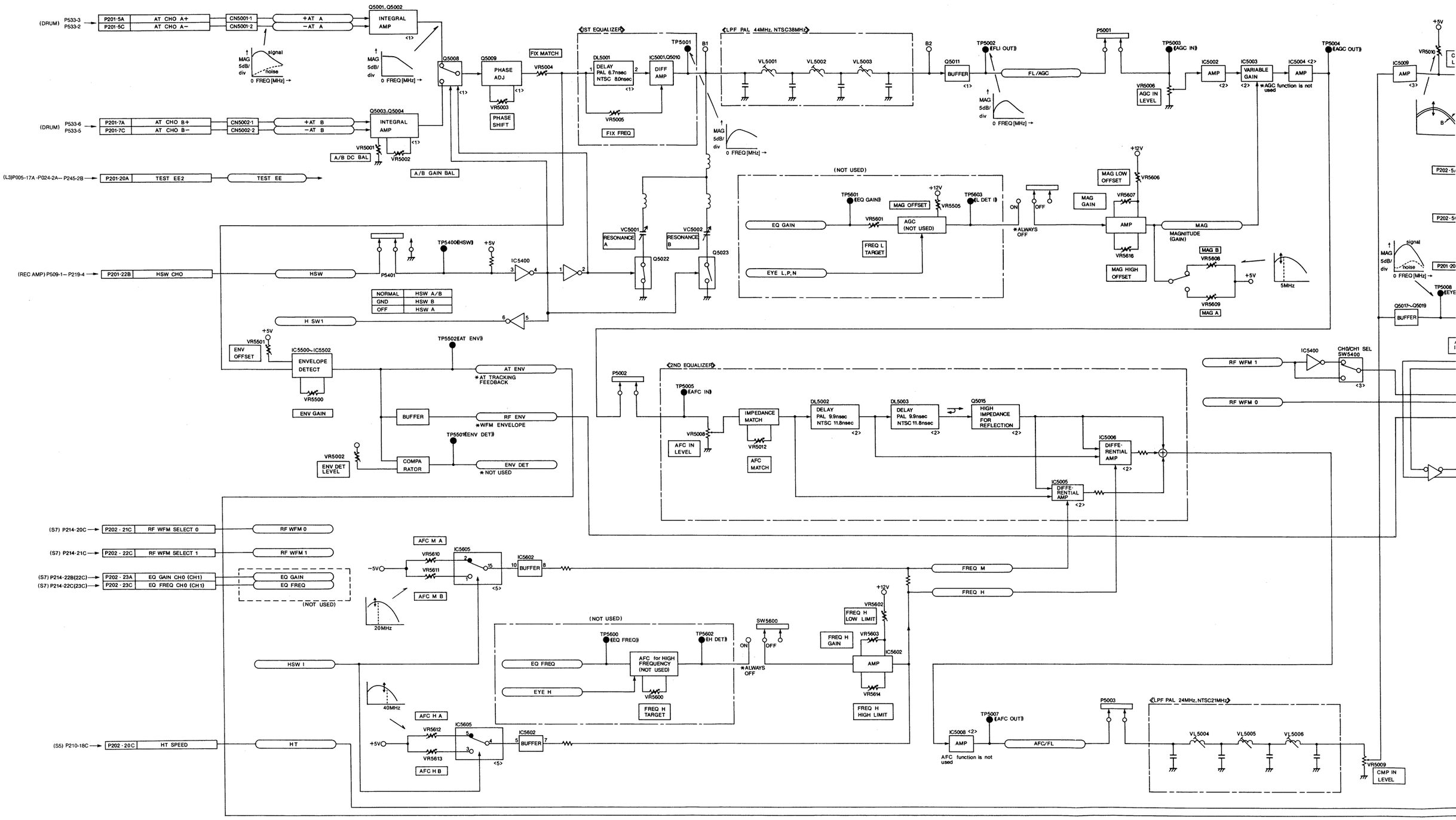

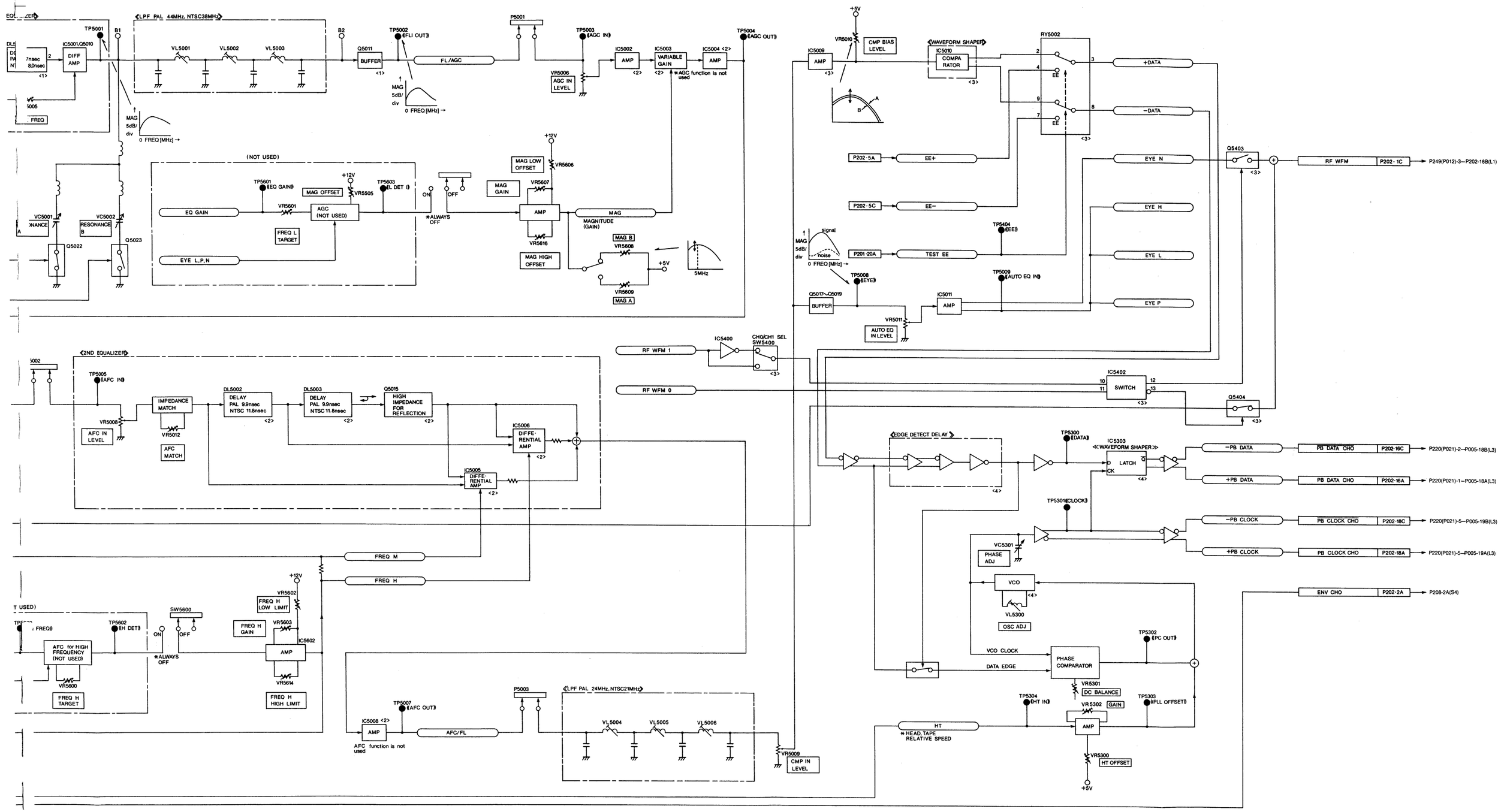

REVERSE SIDE

S3 CUE AUDIO REC

S3 CUE AUDIO REC BLOCK DIAGRAM

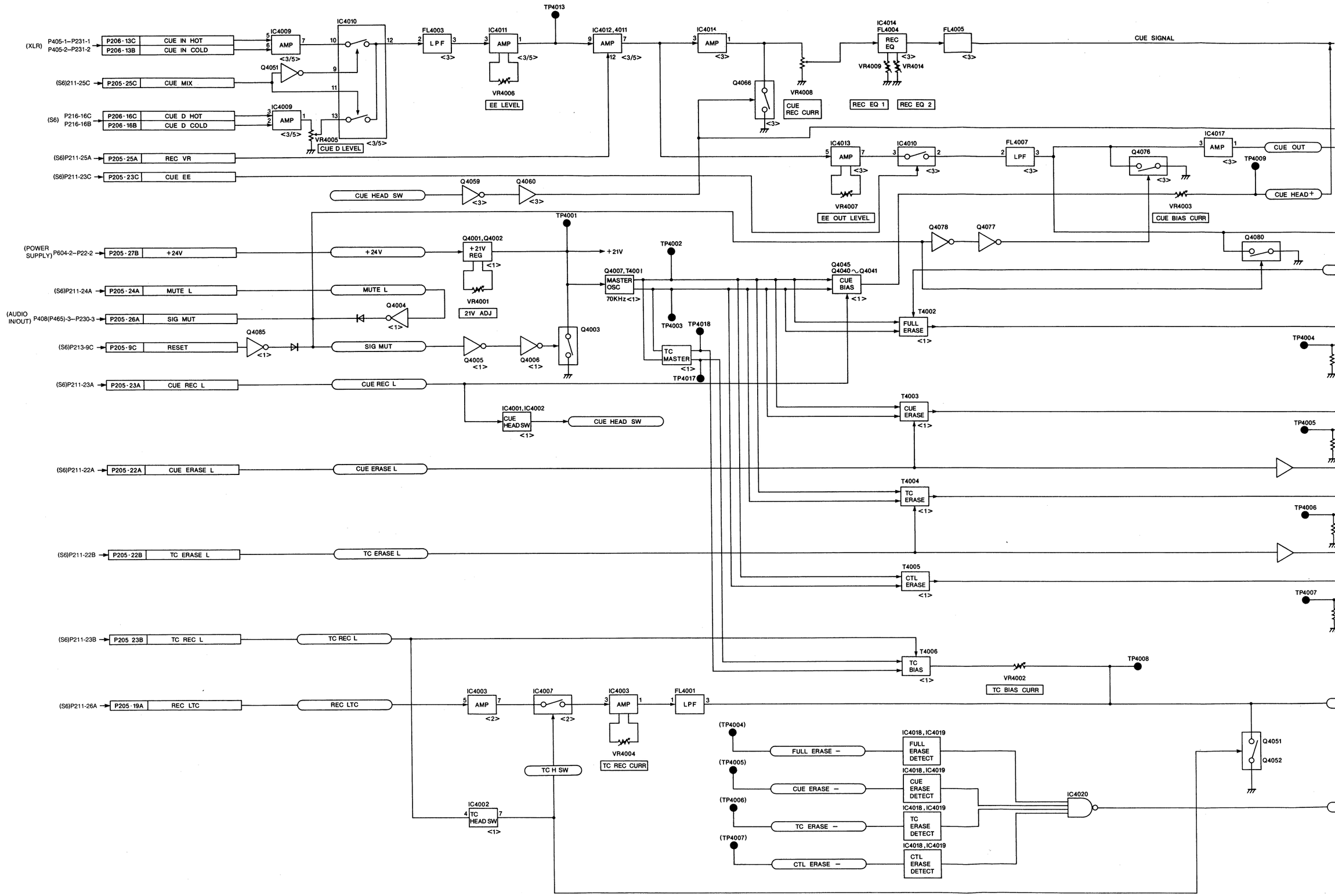

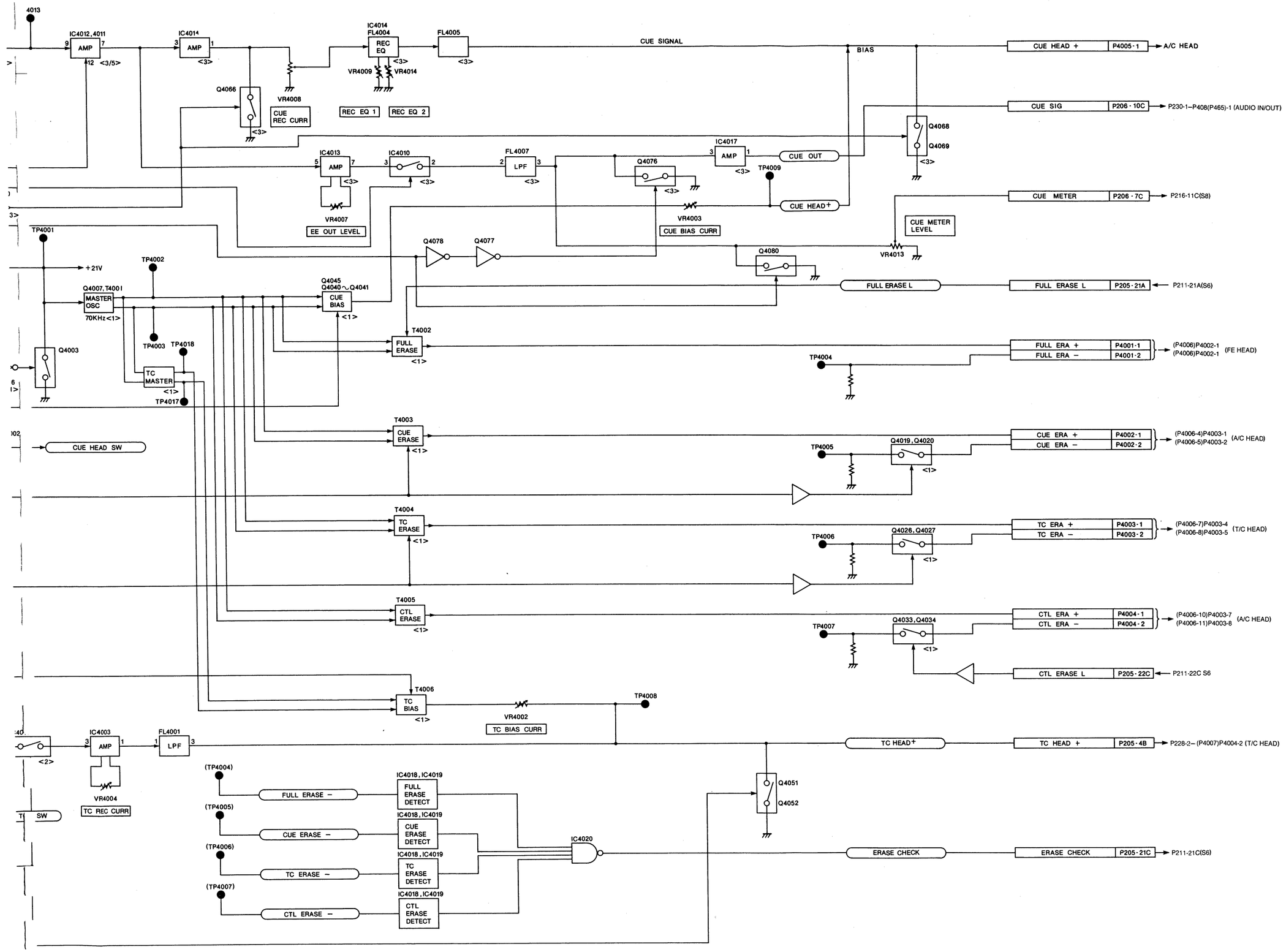
4013
IC4012,4011
AMP
IC4014
AMP
IC4014
FL4004
REC EQ
FL4005
CUE SIGNAL
BIAS
CUE HEAD +
P4005·1
A/C HEAD
VR4009
VR4014
Q4066
VR4008
CUE REC CURR
REC EQ 1
REC EQ 2
CUE SIG
P206·10C
P230-1—P408(P465)-1 (AUDIO IN/OUT)
Q4068
Q4069
IC4013
AMP
IC4010
FL4007
LPF
IC4017
AMP
CUE OUT
TP4009
Q4076
CUE HEAD+
CUE METER
P206·7C
P216-11C(S8)
VR4007
EE OUT LEVEL
VR4003
CUE BIAS CURR
CUE METER LEVEL
TP4001
+21V
TP4002
Q4078
Q4077
Q4080
VR4013
Q4007,T4001
MASTER OSC
70KHz
Q4045
Q4040~Q4041
CUE BIAS
FULL ERASE L
FULL ERASE L
P205·21A
P211-21A(S6)
T4002
FULL ERASE
TP4003
TP4018
TC MASTER
TP4017
Q4003
FULL ERA +
FULL ERA —
P4001·1
P4001·2
(P4006)P4002-1
(P4006)P4002-1
(FE HEAD)
TP4004
T4003
CUE ERASE
CUE HEAD SW
TP4005
Q4019,Q4020
CUE ERA +
CUE ERA —
P4002·1
P4002·2
(P4006-4)P4003-1
(P4006-5)P4003-2
(A/C HEAD)
T4004
TC ERASE
TP4006
Q4026,Q4027
TC ERA +
TC ERA —
P4003·1
P4003·2
(P4006-7)P4003-4
(P4006-8)P4003-5
(T/C HEAD)
T4005
CTL ERASE
TP4007
Q4033,Q4034
CTL ERA +
CTL ERA —
P4004·1
P4004·2
(P4006-10)P4003-7
(P4006-11)P4003-8
(A/C HEAD)
CTL ERASE L
P205·22C
P211-22C S6
T4006
TC BIAS
TP4008
VR4002
TC BIAS CURR
IC4003
AMP
FL4001
LPF
TC HEAD+
TC HEAD +
P205·4B
P228-2—(P4007)P4004-2 (T/C HEAD)
VR4004
TC REC CURR
SW
(TP4004)
FULL ERASE —
IC4018,IC4019
FULL ERASE DETECT
(TP4005)
CUE ERASE —
IC4018,IC4019
CUE ERASE DETECT
(TP4006)
TC ERASE —
IC4018,IC4019
TC ERASE DETECT
(TP4007)
CTL ERASE —
IC4018,IC4019
CTL ERASE DETECT
IC4020
Q4051
Q4052
ERASE CHECK
ERASE CHECK
P205·21C
P211-21C(S6)

S3 CUE AUDIO PLAYBACK BLOCK DIAGRAM

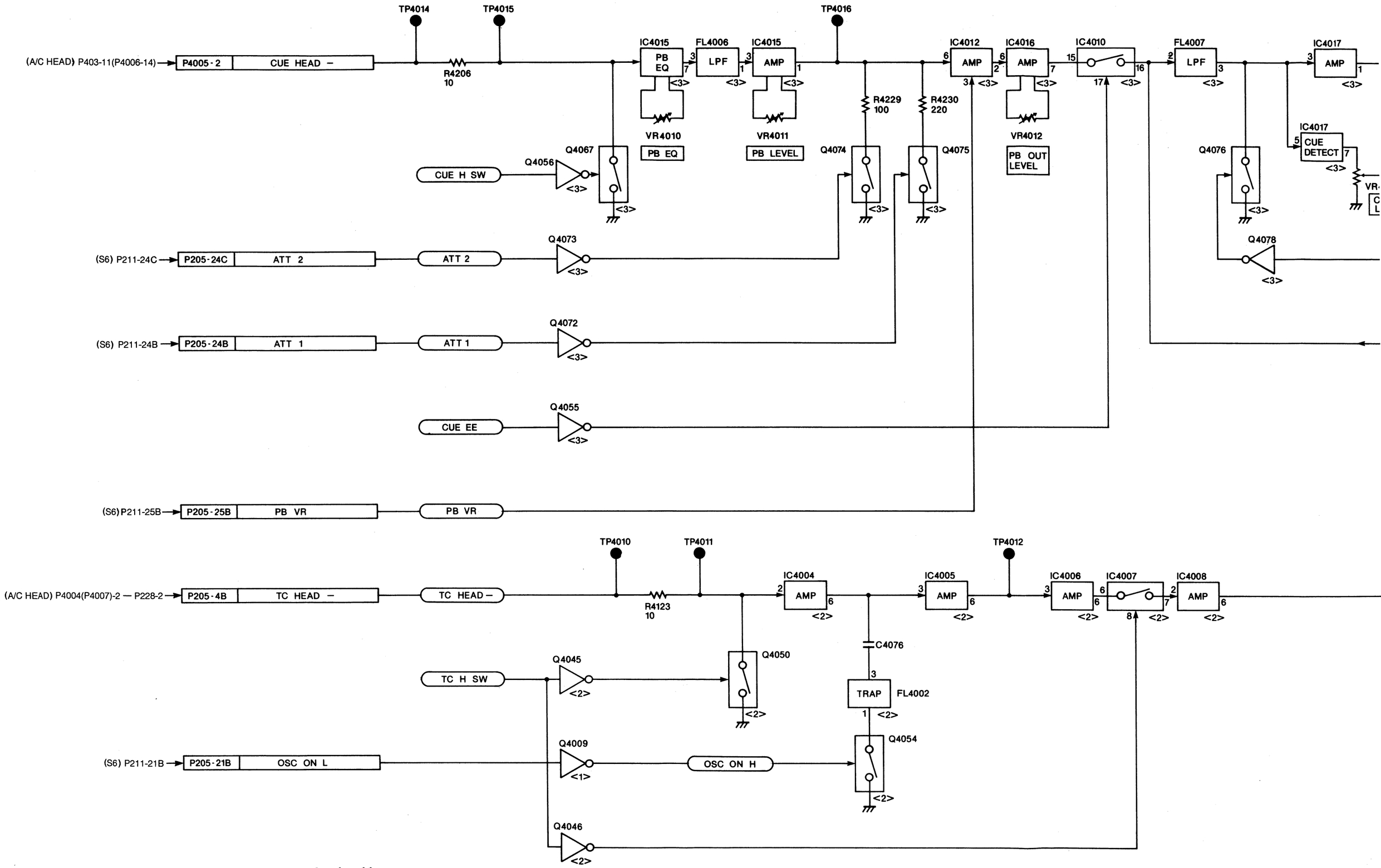

S4 AUTO TRACKING BLOCK DIAGRAM

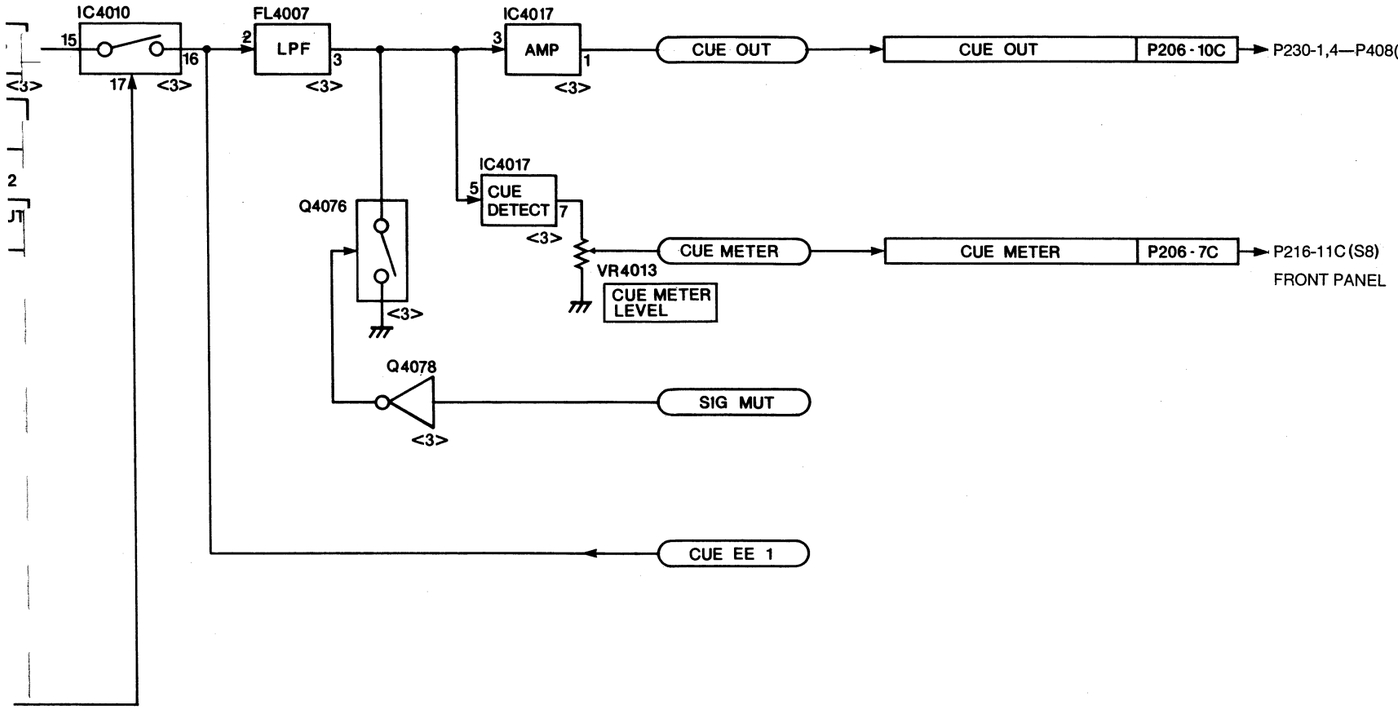

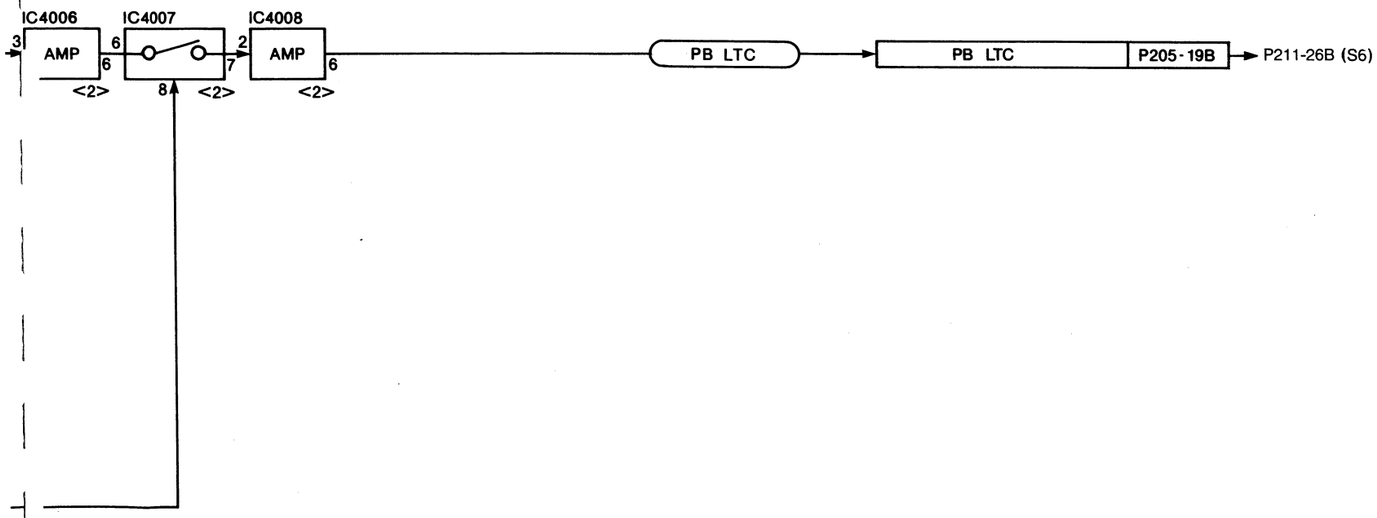

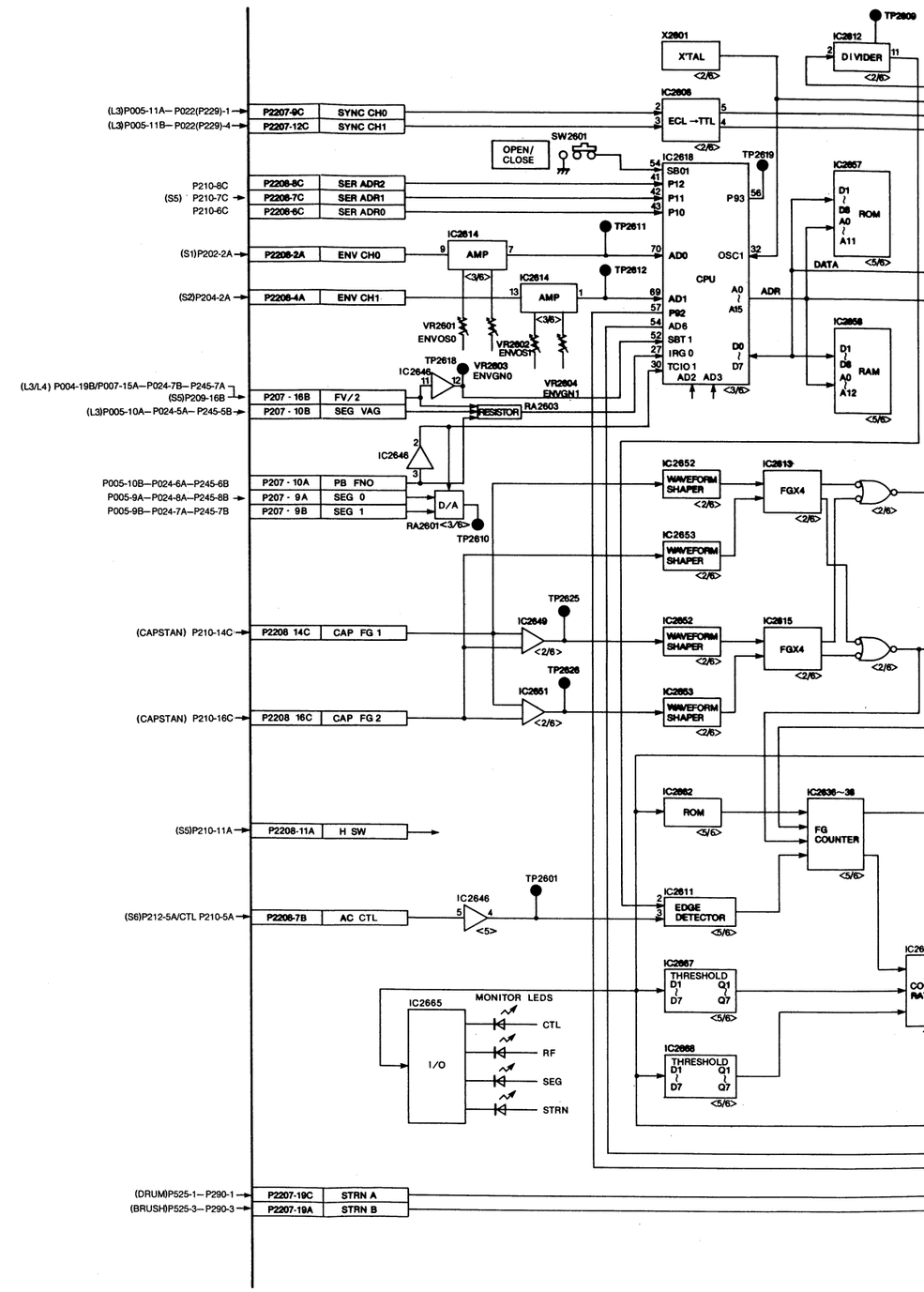

S4 AUTO TRACKING BLOCK DIAGRAM

→ P230-1,4—P408(P465)-1 (REAR PANEL)

→ P216-11C (S8)
FRONT PANEL

→ P211-26B (S6)

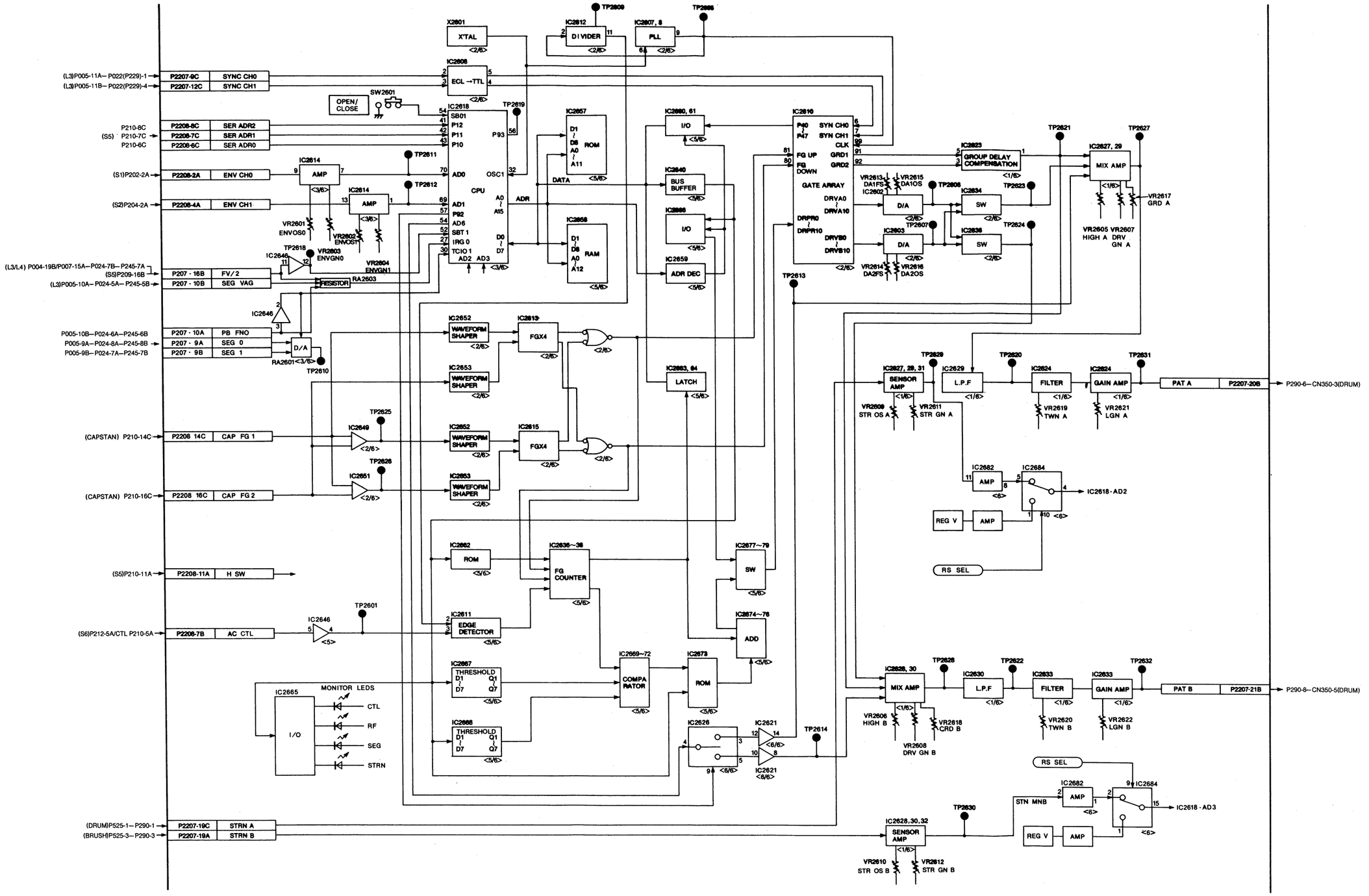

S5 SERVO BLOCK DIAGRAM

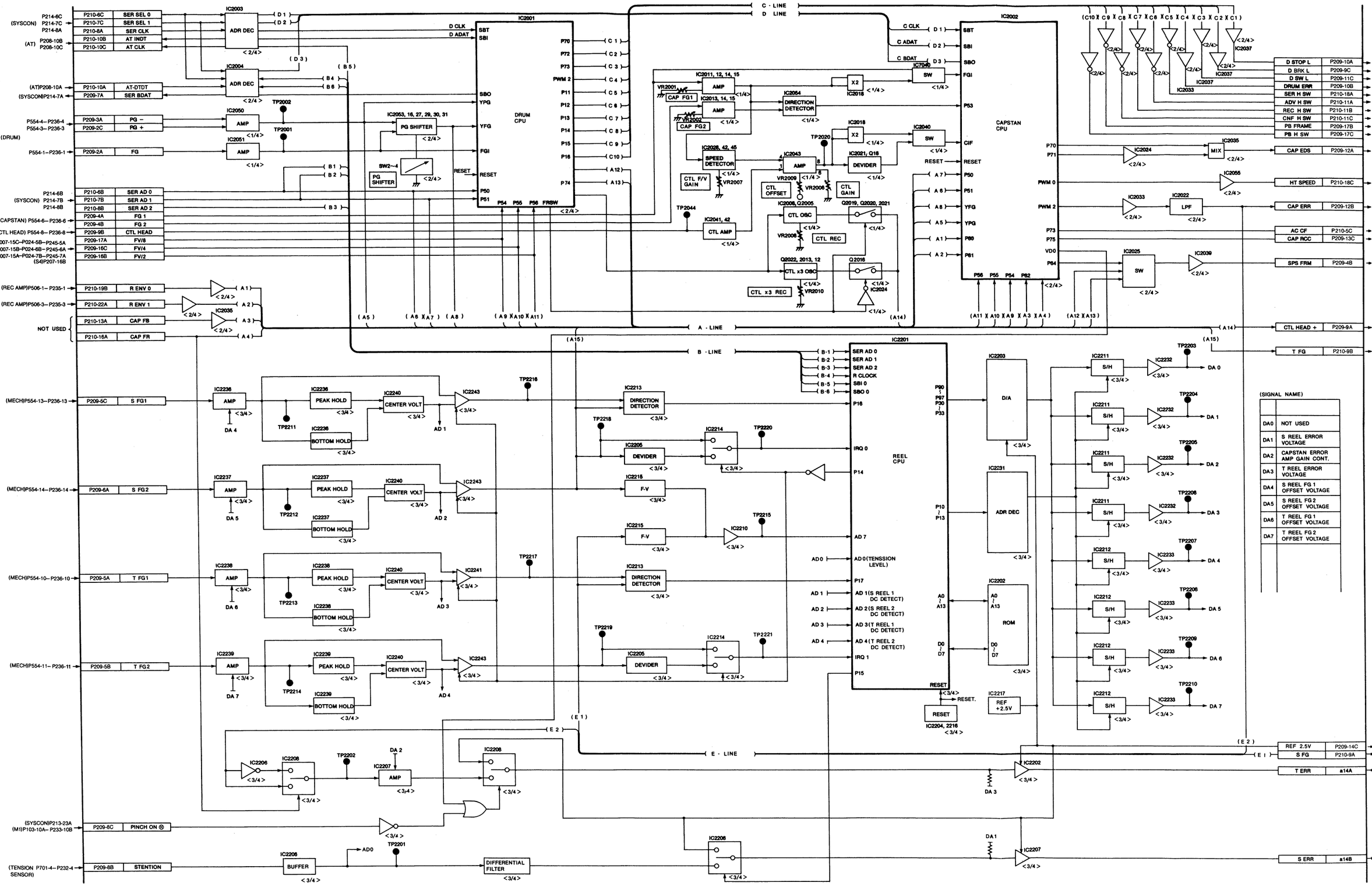

S6 TIME CODE BLOCK DIAGRAM

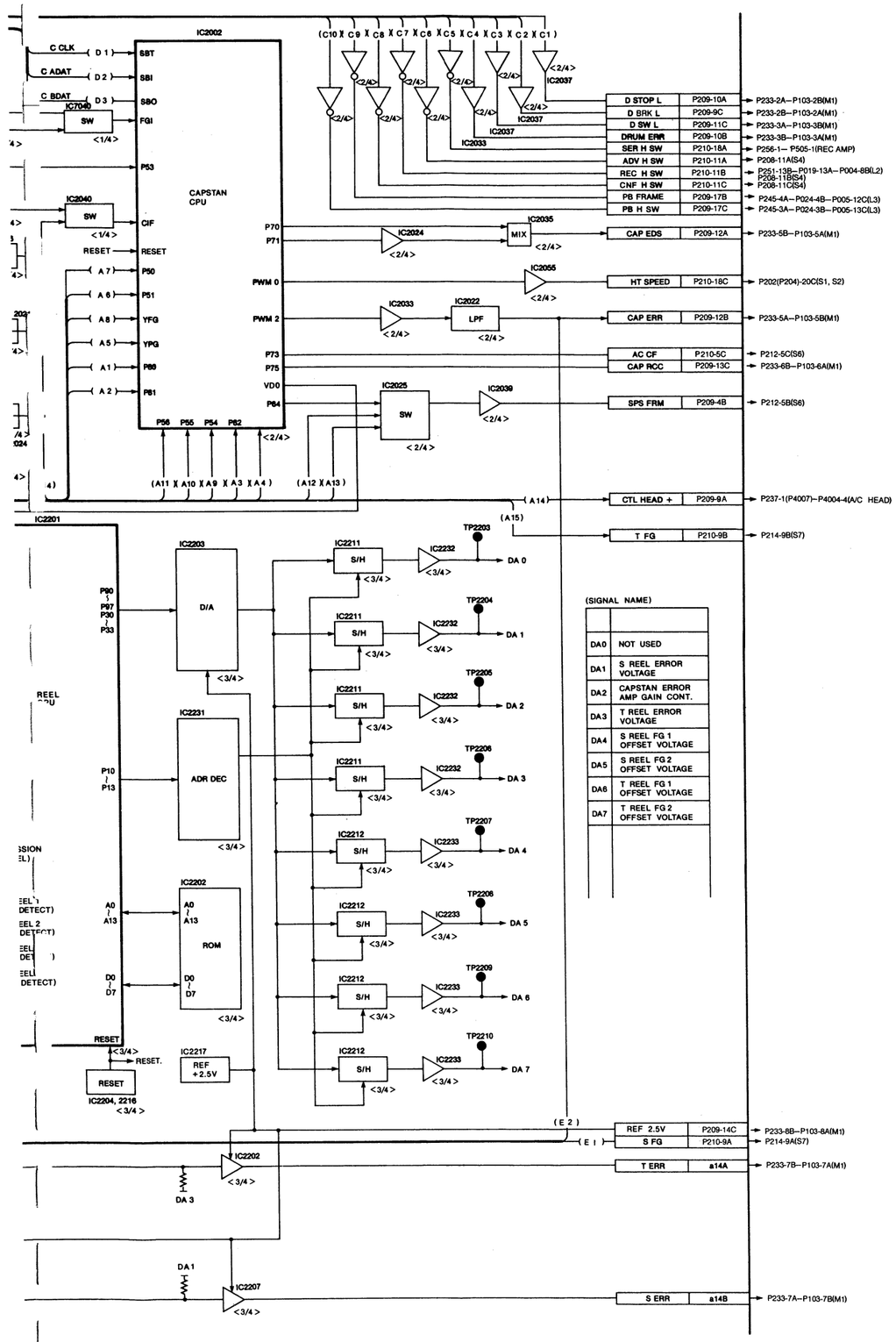

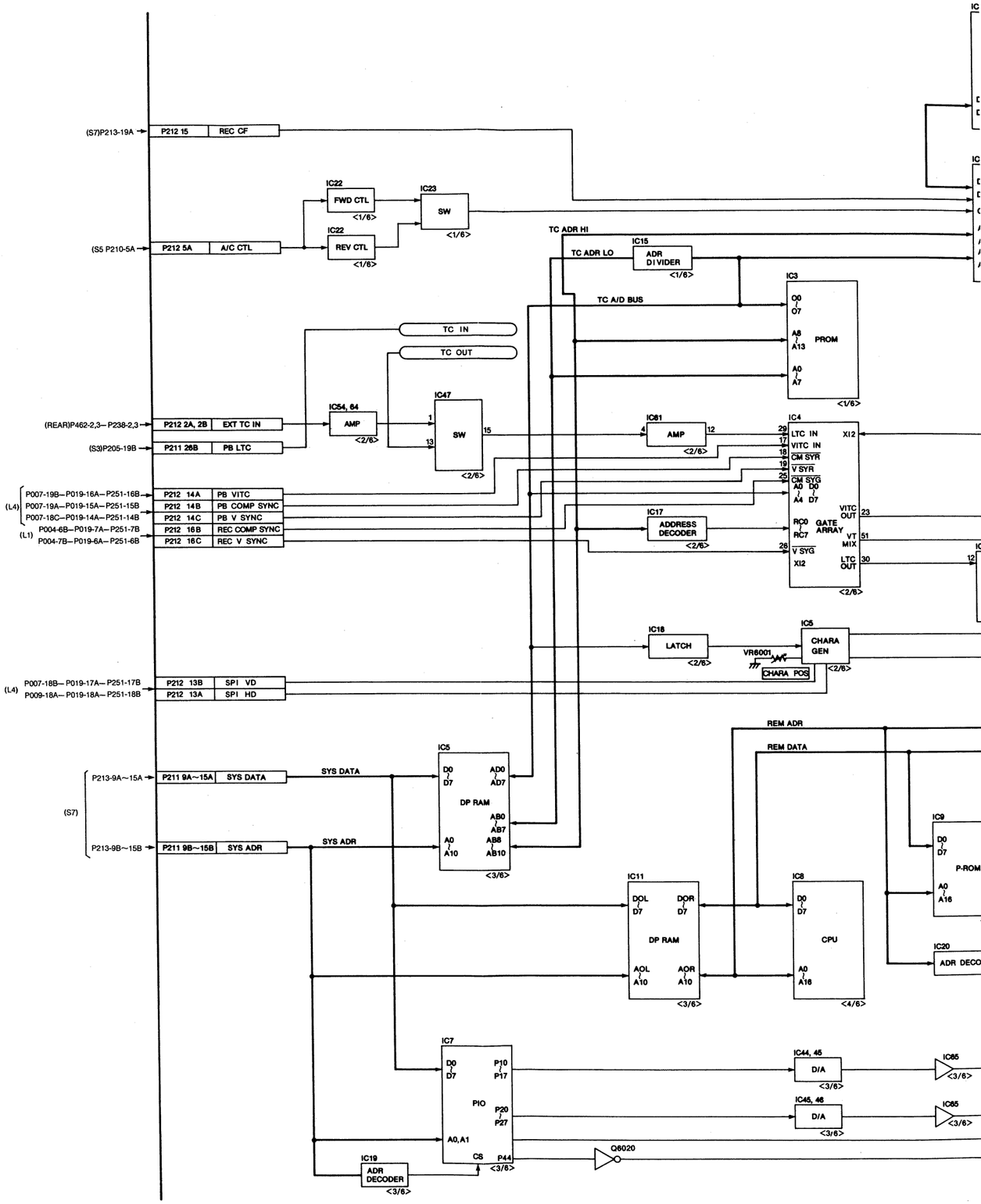

DE BLOCK DIAGRAM

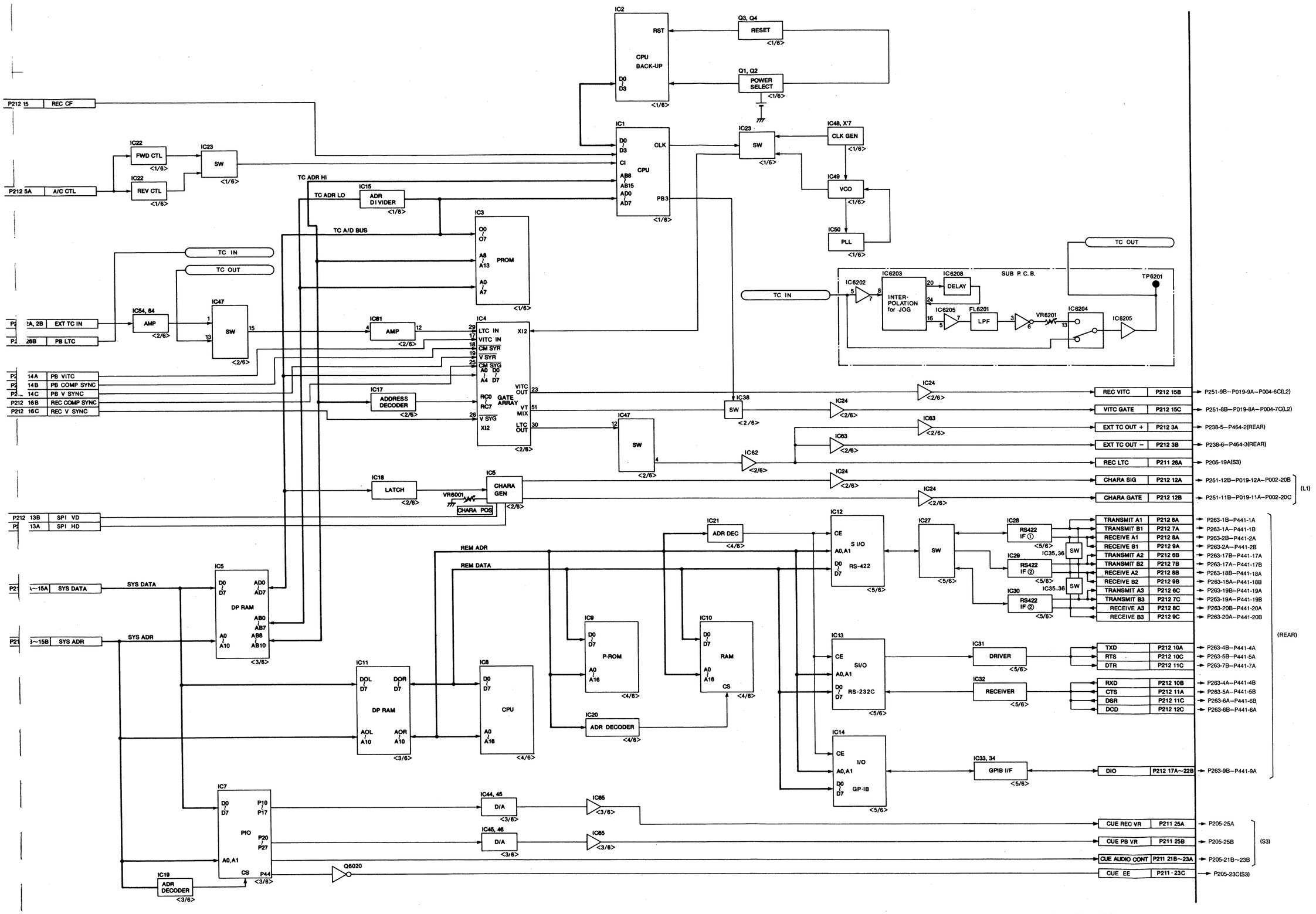

S7 SYSTEM CONTROL BLOCK DIAGRAM

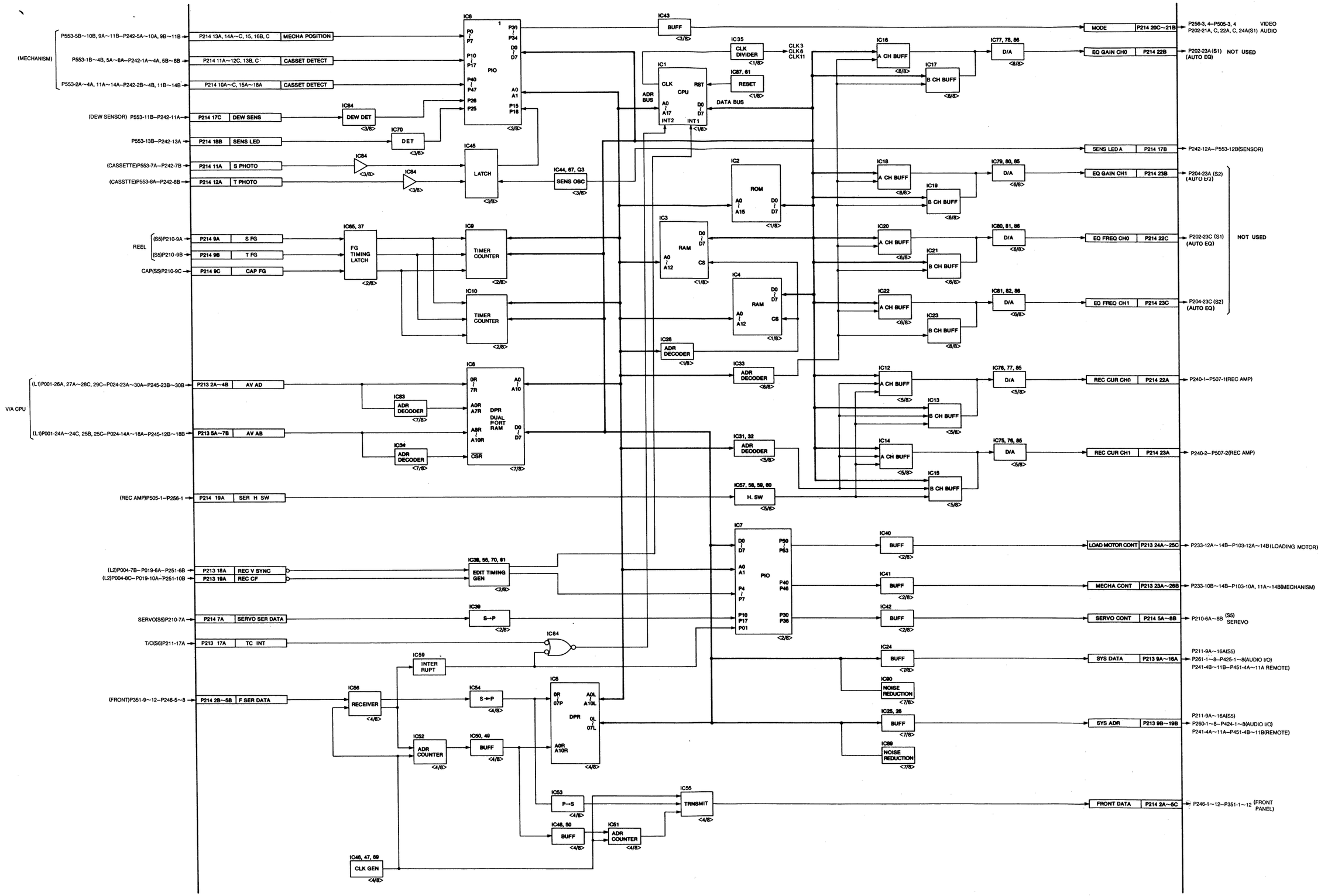

S8 AU

(L1)P002-4A ·
(L1)P002-4C ·
(L3)P006-15A ·
(L3)P006-15B ·
(L3)P005-8B ·
(L3)P005-8C ·
(D. AU
(D. AU
(REAR
(D. AU
(D. AU
(REAR

S8 AUDIO PROCESS BLOCK DIAGRAM

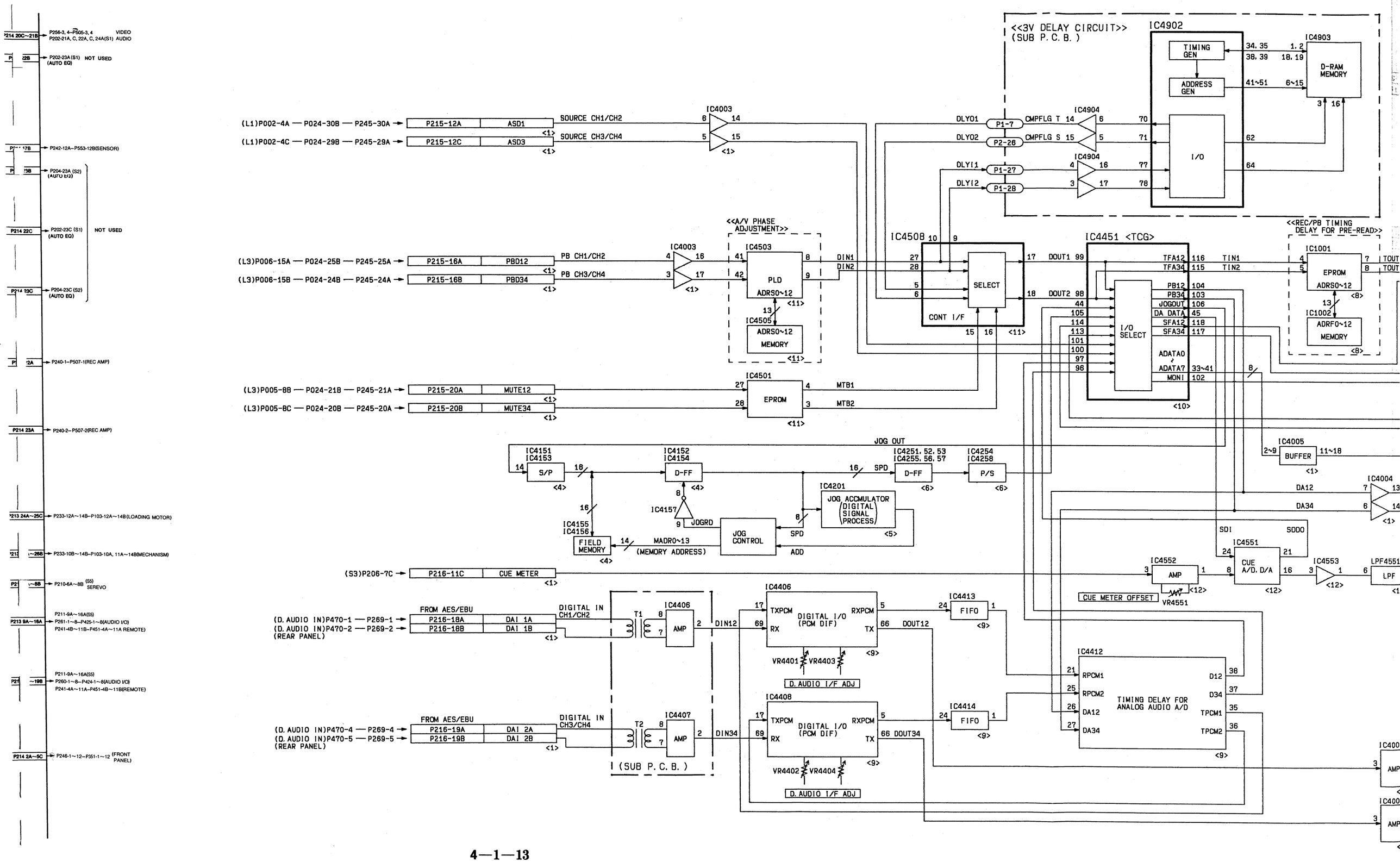

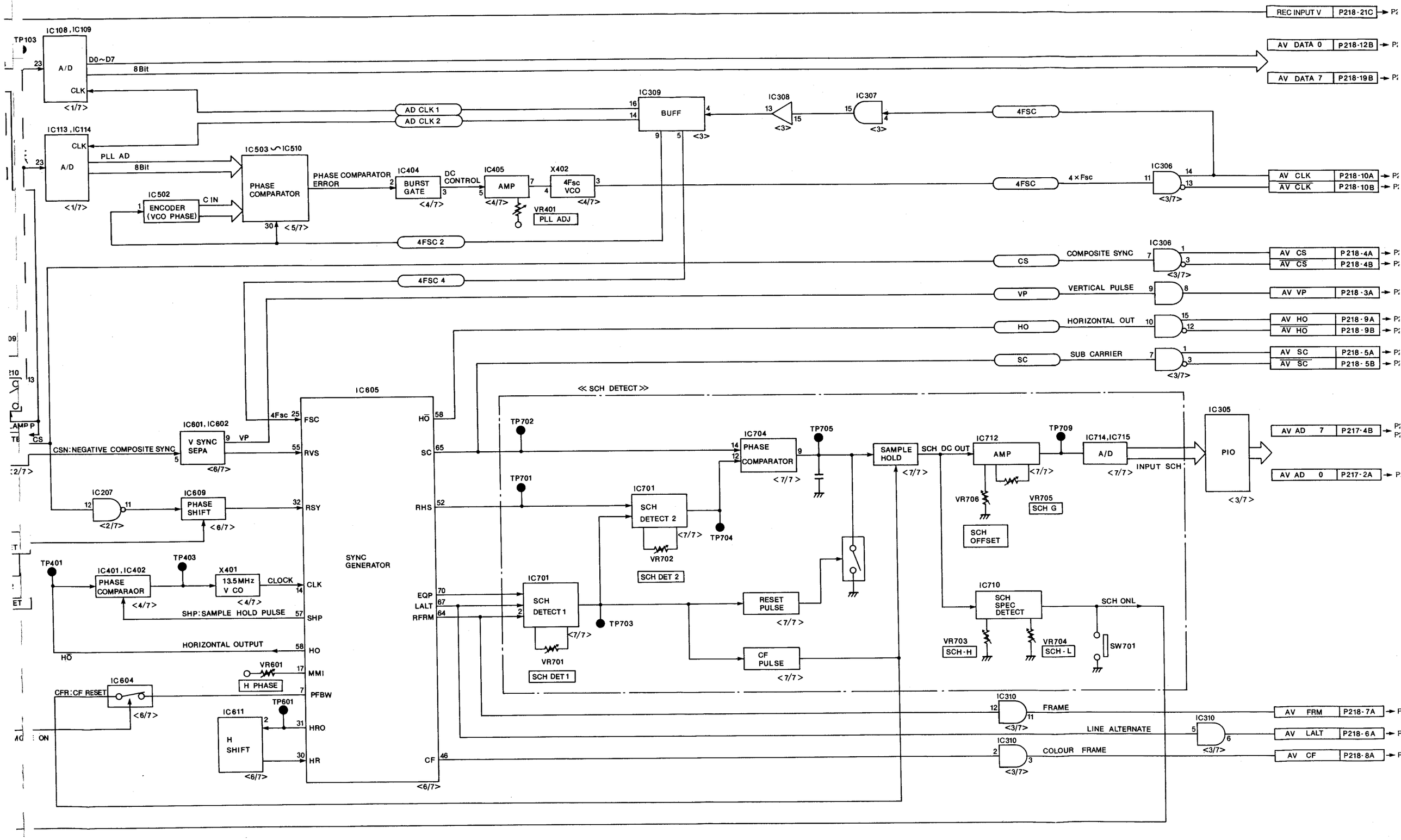

REC INPUT V
P218-21C
AV DATA 0
P218-12B
AV DATA 7
P218-19B
IC108, IC109
TP103
A/D
D0~D7
8Bit
CLK
IC113, IC114
PLL AD
IC503 ~ IC510
PHASE COMPARATOR
PHASE COMPARATOR ERROR
IC502
ENCODER (VCO PHASE)
C IN
IC404
BURST GATE
DC CONTROL
IC405
AMP
X402
4Fsc VCO
VR401
PLL ADJ
AD CLK 1
AD CLK 2
IC309
BUFF
IC308
IC307
4FSC
4×Fsc
IC306
AV CLK
P218-10A
P218-10B
4FSC 2
4FSC 4
CS
COMPOSITE SYNC
AV CS
P218-4A
P218-4B
VP
VERTICAL PULSE
AV VP
P218-3A
HO
HORIZONTAL OUT
AV HO
P218-9A
P218-9B
SC
SUB CARRIER
AV SC
P218-5A
P218-5B
IC605
SYNC GENERATOR
FSC
RVS
RSY
CLK
SHP
HO
MMI
PFBW
HRO
HR
HO
SC
RHS
EQP
LALT
RFRM
CF
IC601, IC602
V SYNC SEPA
CSN: NEGATIVE COMPOSITE SYNC
IC207
IC609
PHASE SHIFT
TP401
IC401, IC402
PHASE COMPARAOR
TP403
X401
13.5MHz V CO
CLOCK
SHP: SAMPLE HOLD PULSE
HORIZONTAL OUTPUT
VR601
H PHASE
IC604
CFR: CF RESET
IC611
H SHIFT
TP601
<< SCH DETECT >>
TP702
TP701
IC704
PHASE COMPARATOR
TP705
SAMPLE HOLD
SCH DC OUT
IC712
AMP
TP709
IC714, IC715
A/D
INPUT SCH
IC305
PIO
AV AD 7
P217-4B
AV AD 0
P217-2A
IC701
SCH DETECT 2
VR702
SCH DET 2
TP704
VR706
SCH OFFSET
VR705
SCH G
IC701
SCH DETECT 1
VR701
SCH DET 1
TP703
RESET PULSE
CF PULSE
IC710
SCH SPEC DETECT
SCH ONL
VR703
SCH-H
VR704
SCH-L
SW701
IC310
FRAME
LINE ALTERNATE
COLOUR FRAME
AV FRM
P218-7A
AV LALT
P218-6A
AV CF
P218-8A

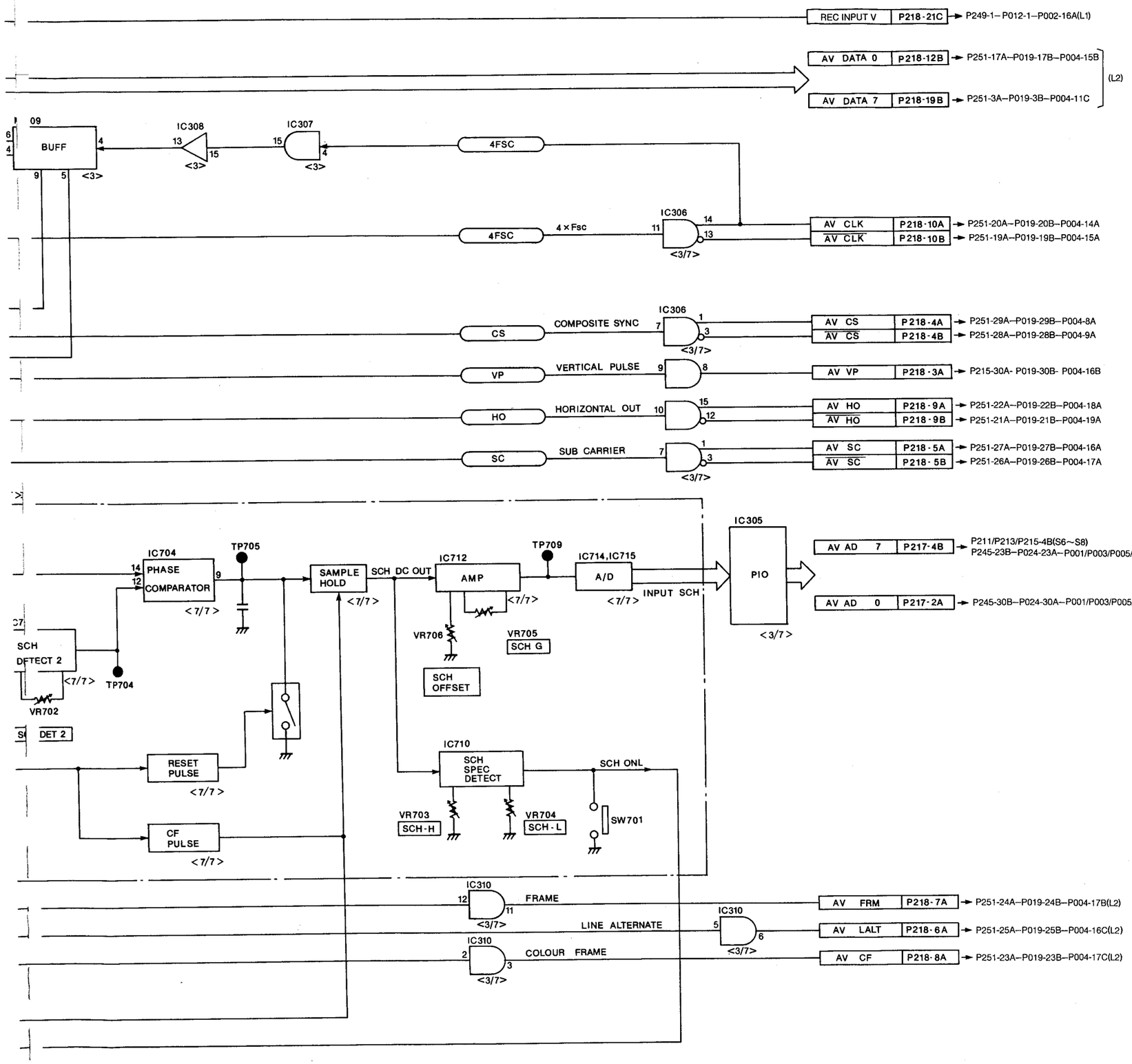
REC INPUT V
P218-21C
P249-1–P012-1–P002-16A(L1)
AV DATA 0
P218-12B
P251-17A–P019-17B–P004-15B
AV DATA 7
P218-19B
P251-3A–P019-3B–P004-11C
(L2)
09
BUFF
IC308
IC307
4FSC
4FSC
4×Fsc
IC306
AV CLK
P218-10A
P251-20A–P019-20B–P004-14A
AV CLK
P218-10B
P251-19A–P019-19B–P004-15A
CS
COMPOSITE SYNC
AV CS
P218-4A
P251-29A–P019-29B–P004-8A
AV CS
P218-4B
P251-28A–P019-28B–P004-9A
VP
VERTICAL PULSE
AV VP
P218-3A
P215-30A- P019-30B- P004-16B
HO
HORIZONTAL OUT
AV HO
P218-9A
P251-22A–P019-22B–P004-18A
AV HO
P218-9B
P251-21A–P019-21B–P004-19A
SC
SUB CARRIER
AV SC
P218-5A
P251-27A–P019-27B–P004-16A
AV SC
P218-5B
P251-26A–P019-26B–P004-17A
IC704
PHASE COMPARATOR
TP705
SAMPLE HOLD
SCH DC OUT
IC712
AMP
TP709
IC714,IC715
A/D
INPUT SCH
IC305
PIO
AV AD 7
P217-4B
P211/P213/P215-4B(S6~S8)
P245-23B–P024-23A–P001/P003/P005/P007-26A(L1~L4)
AV AD 0
P217-2A
P245-30B–P024-30A–P001/P003/P005/P007-29C(L1~L4)
SCH DETECT 2
TP704
VR702
VR706
VR705
SCH G
SCH OFFSET
IC710
SCH SPEC DETECT
SCH ONL
VR703
SCH-H
VR704
SCH-L
SW701
RESET PULSE
CF PULSE
IC310
FRAME
AV FRM
P218-7A
P251-24A–P019-24B–P004-17B(L2)
LINE ALTERNATE
AV LALT
P218-6A
P251-25A–P019-25B–P004-16C(L2)
COLOUR FRAME
AV CF
P218-8A
P251-23A–P019-23B–P004-17C(L2)

REC AMPLIFIER BLOCK DIAGRAM

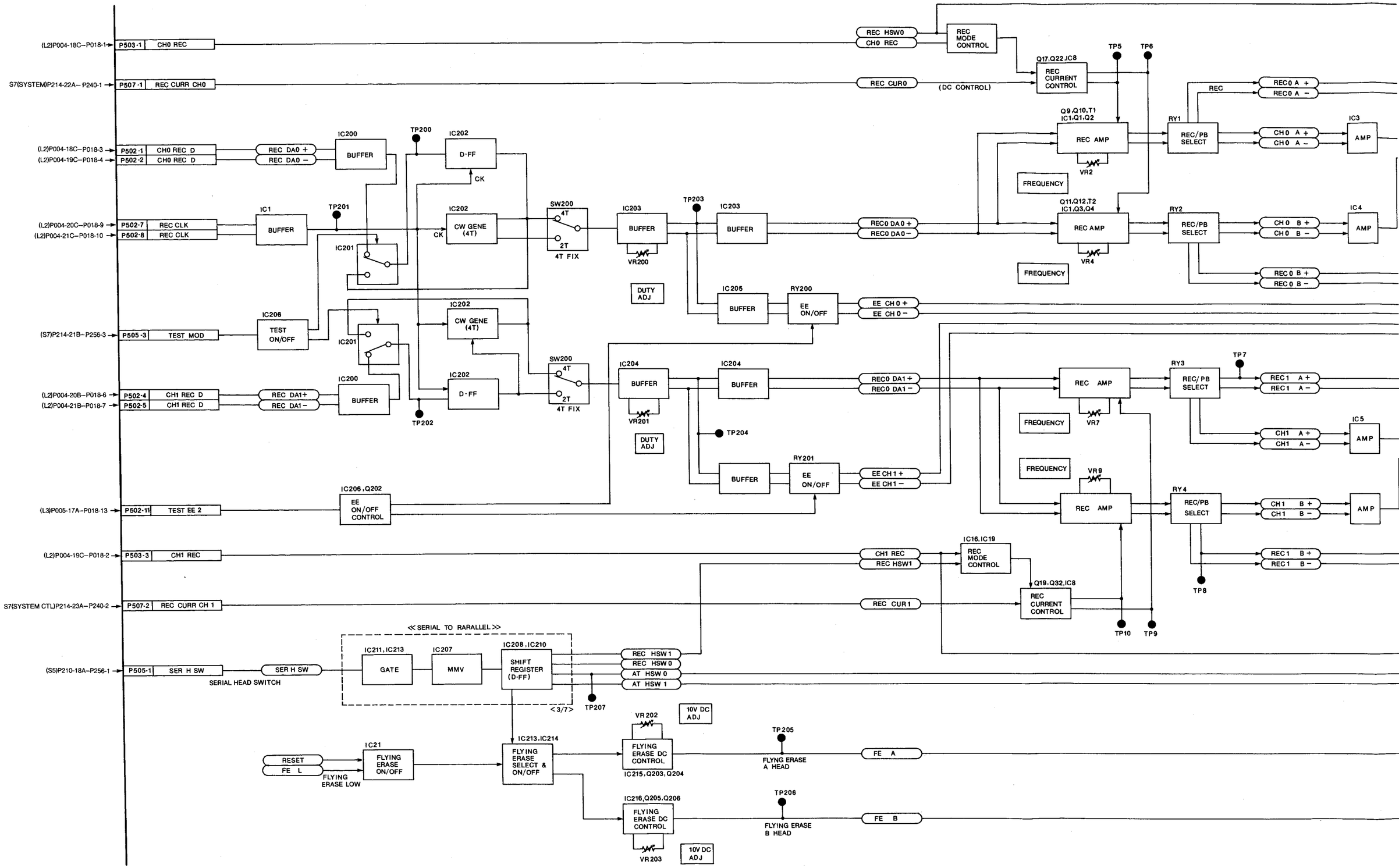

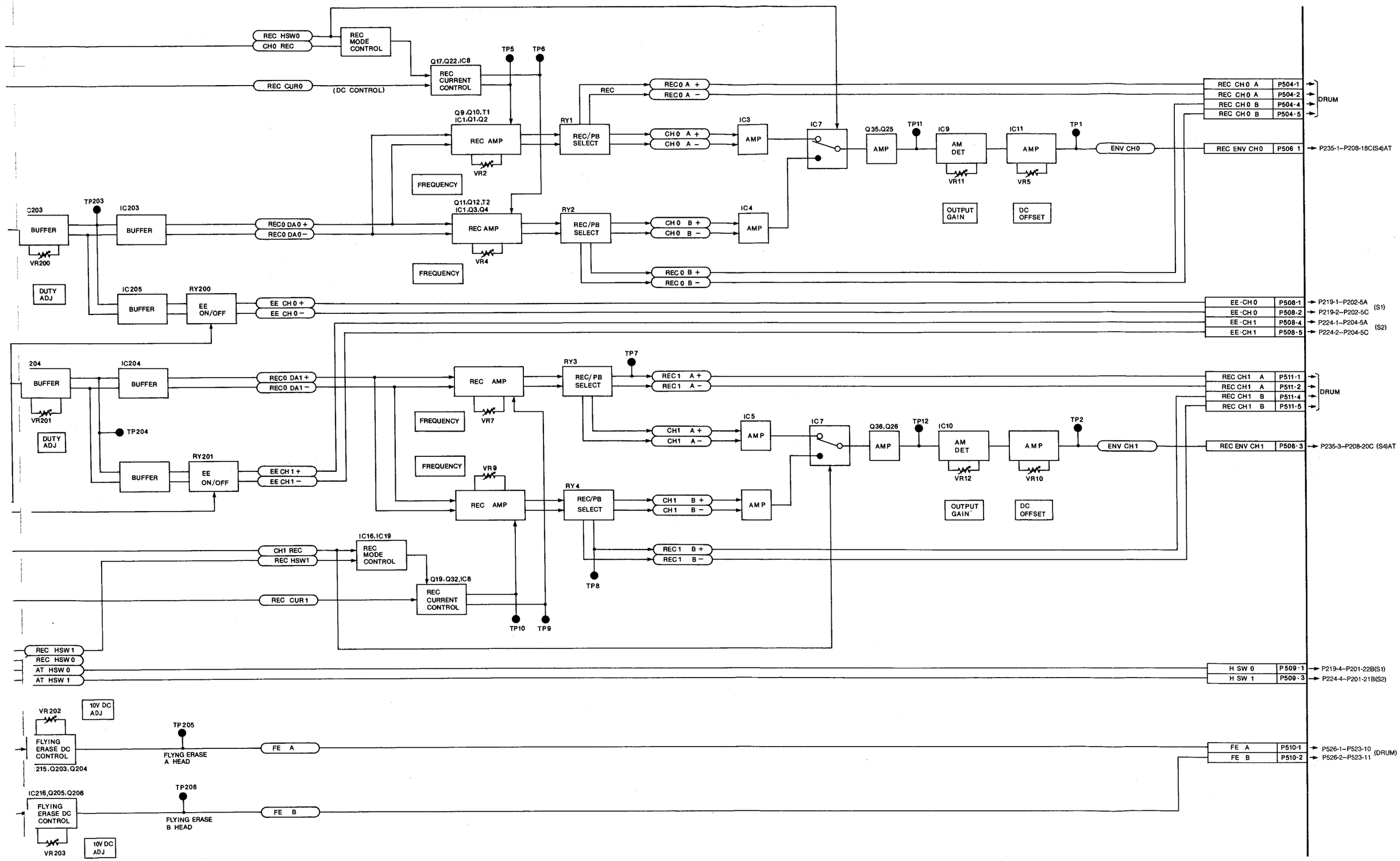
REC HSW0
CH0 REC
REC MODE CONTROL
REC CUR0
(DC CONTROL)
Q17,Q22,IC8
REC CURRENT CONTROL
TP5
TP6
REC
REC0 A +
REC0 A –
Q9,Q10,T1
IC1,Q1,Q2
REC AMP
VR2
FREQUENCY
RY1
REC/PB SELECT
CH0 A +
CH0 A –
IC3
AMP
IC7
Q35,Q25
AMP
TP11
IC9
AM DET
VR11
IC11
AMP
VR5
TP1
ENV CH0
REC CH0 A P504-1
REC CH0 A P504-2
REC CH0 B P504-4
REC CH0 B P504-5
DRUM
REC ENV CH0 P506 1
P235-1–P208-18C(S4)AT
OUTPUT GAIN
DC OFFSET
C203
TP203
IC203
BUFFER
VR200
REC0 DA0 +
REC0 DA0 –
Q11,Q12,T2
IC1,Q3,Q4
REC AMP
VR4
FREQUENCY
RY2
REC/PB SELECT
CH0 B +
CH0 B –
IC4
AMP
REC0 B +
REC0 B –
DUTY ADJ
IC205
BUFFER
RY200
EE ON/OFF
EE CH0 +
EE CH0 –
EE·CH0 P508-1
EE·CH0 P508-2
EE·CH1 P508-4
EE·CH1 P508-5
P219-1–P202-5A (S1)
P219-2–P202-5C
P224-1–P204-5A (S2)
P224-2–P204-5C
204
IC204
BUFFER
VR201
REC0 DA1 +
REC0 DA1 –
REC AMP
VR7
FREQUENCY
RY3
REC/PB SELECT
TP7
REC1 A +
REC1 A –
CH1 A +
CH1 A –
IC5
AMP
IC7
Q36,Q26
AMP
TP12
IC10
AM DET
VR12
AMP
VR10
TP2
ENV CH1
REC CH1 A P511-1
REC CH1 A P511-2
REC CH1 B P511-4
REC CH1 B P511-5
DRUM
REC ENV CH1 P506-3
P235-3–P208-20C (S4)AT
OUTPUT GAIN
DC OFFSET
DUTY ADJ
TP204
RY201
BUFFER
EE ON/OFF
EE CH1 +
EE CH1 –
FREQUENCY
VR9
REC AMP
RY4
REC/PB SELECT
CH1 B +
CH1 B –
AMP
REC1 B +
REC1 B –
TP8
IC16,IC19
REC MODE CONTROL
CH1 REC
REC HSW1
Q19,Q32,IC8
REC CURRENT CONTROL
REC CUR1
TP10
TP9
REC HSW 1
REC HSW 0
AT HSW 0
AT HSW 1
H SW 0 P509-1
H SW 1 P509-3
P219-4–P201-22B(S1)
P224-4–P201-21B(S2)
VR202
10V DC ADJ
TP205
FLYING ERASE DC CONTROL
215,Q203,Q204
FLYNG ERASE A HEAD
FE A
FE A P510-1
FE B P510-2
P526-1–P523-10 (DRUM)
P526-2–P523-11
IC216,Q205,Q206
TP206
FLYING ERASE DC CONTROL
VR203
10V DC ADJ
FLYING ERASE B HEAD
FE B

AUDIO IN BLOCK DIAGRAM

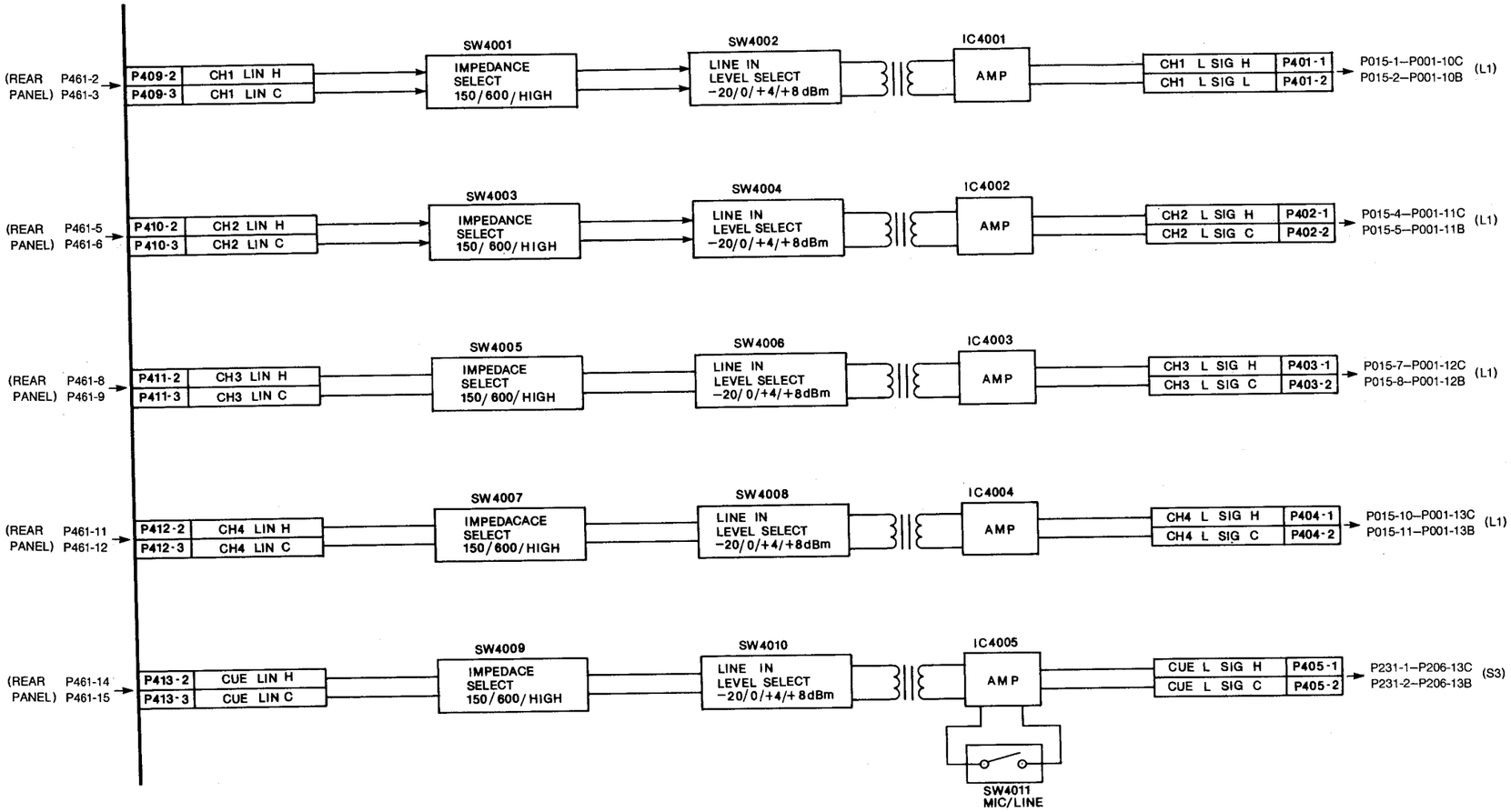

AUDIO OUT BLOCK DIAGRAM [FOR PAL]

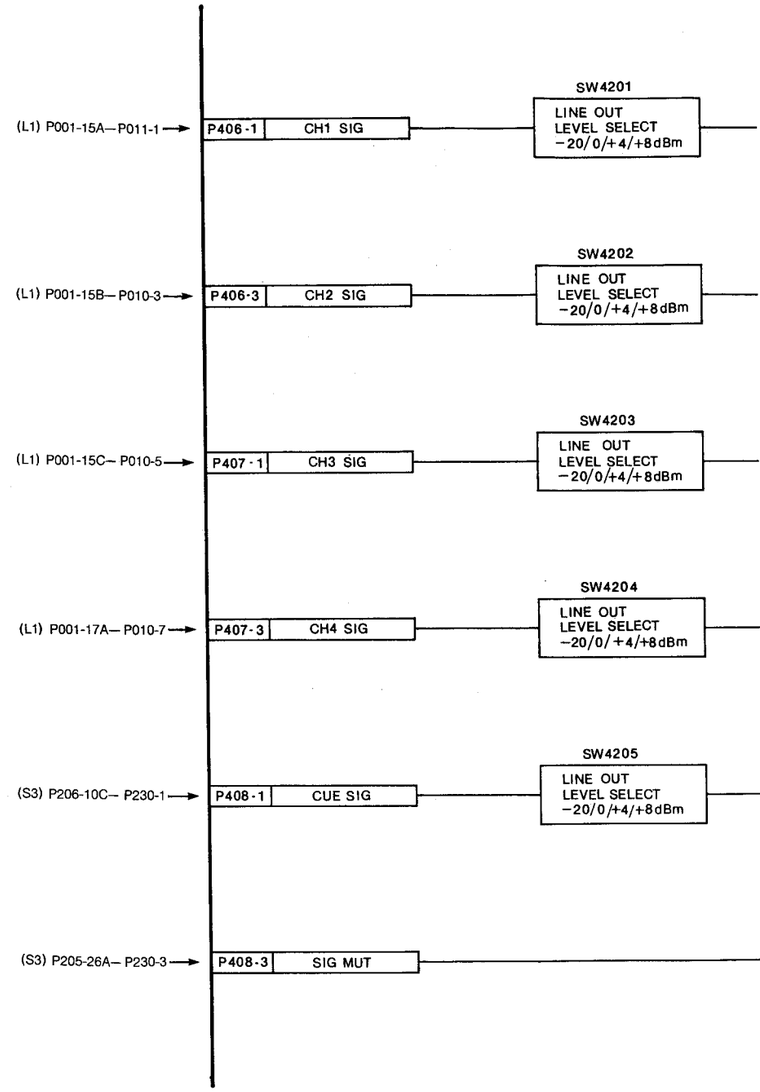

AUDIO OUT BLOCK DIAGRAM [FOR PAL]

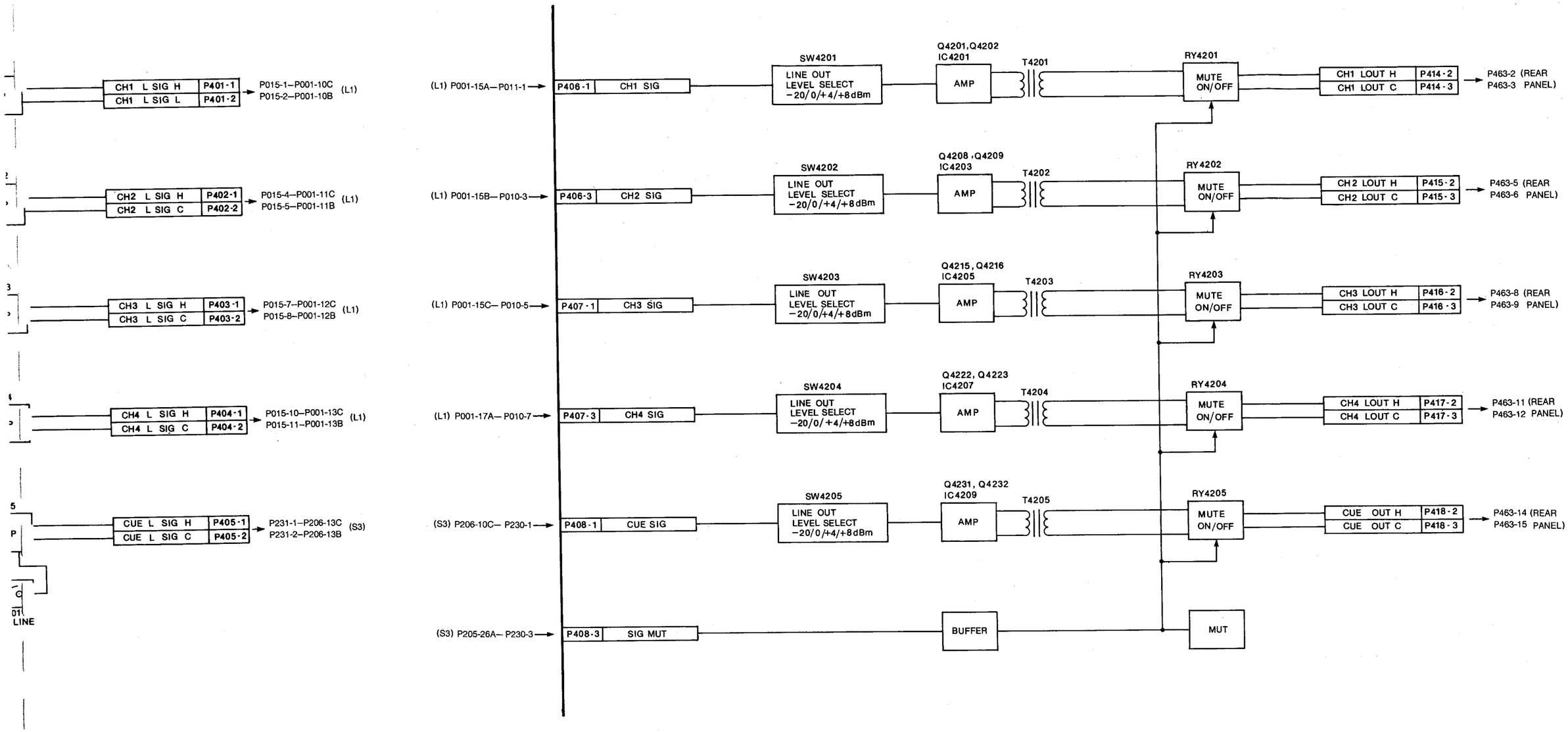

AUDIO OUT BLOCK DIAGRAM [FOR NTSC]

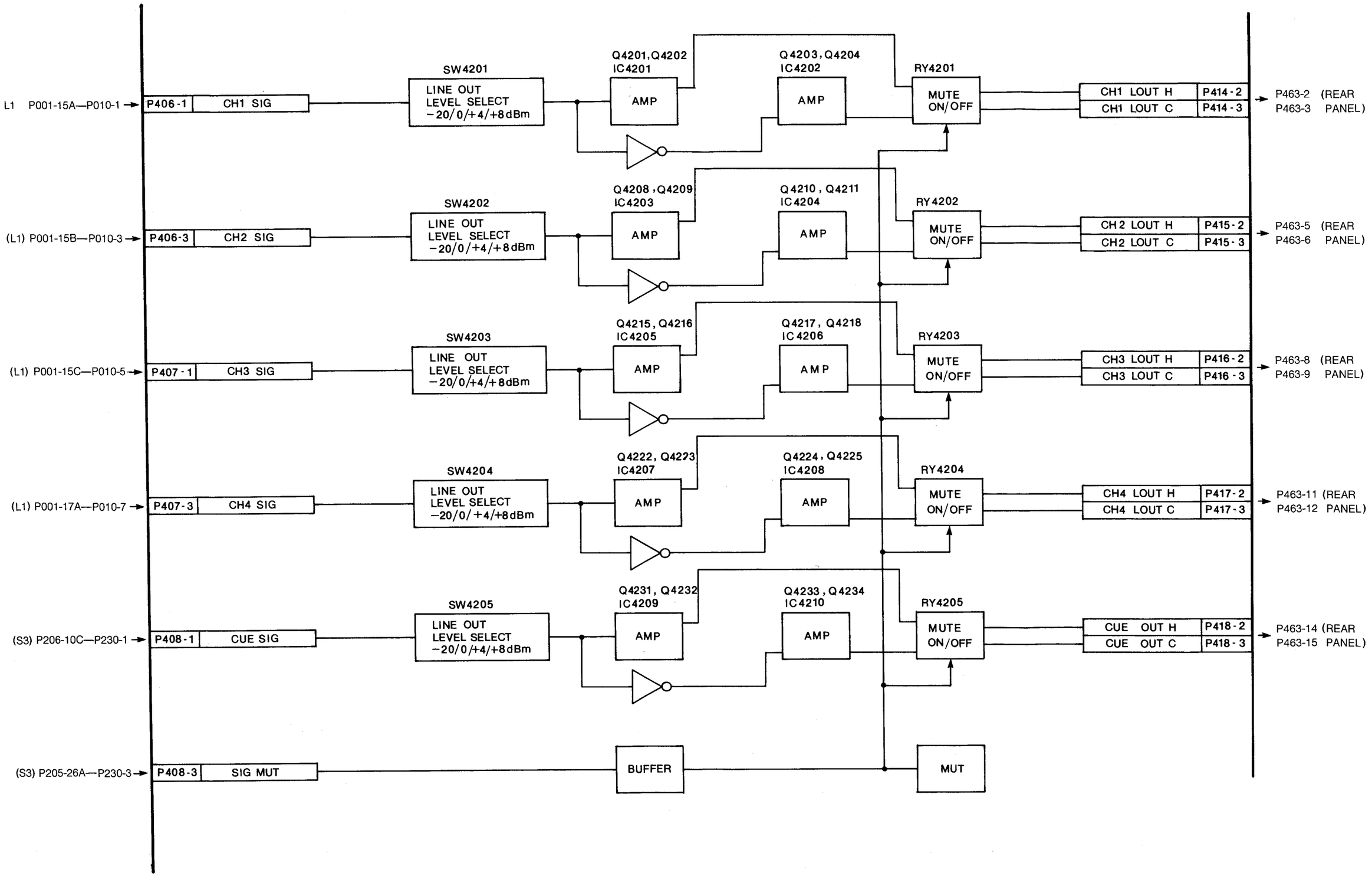

4—1—17

POWER SUPPLY BLOCK DIAGRAM

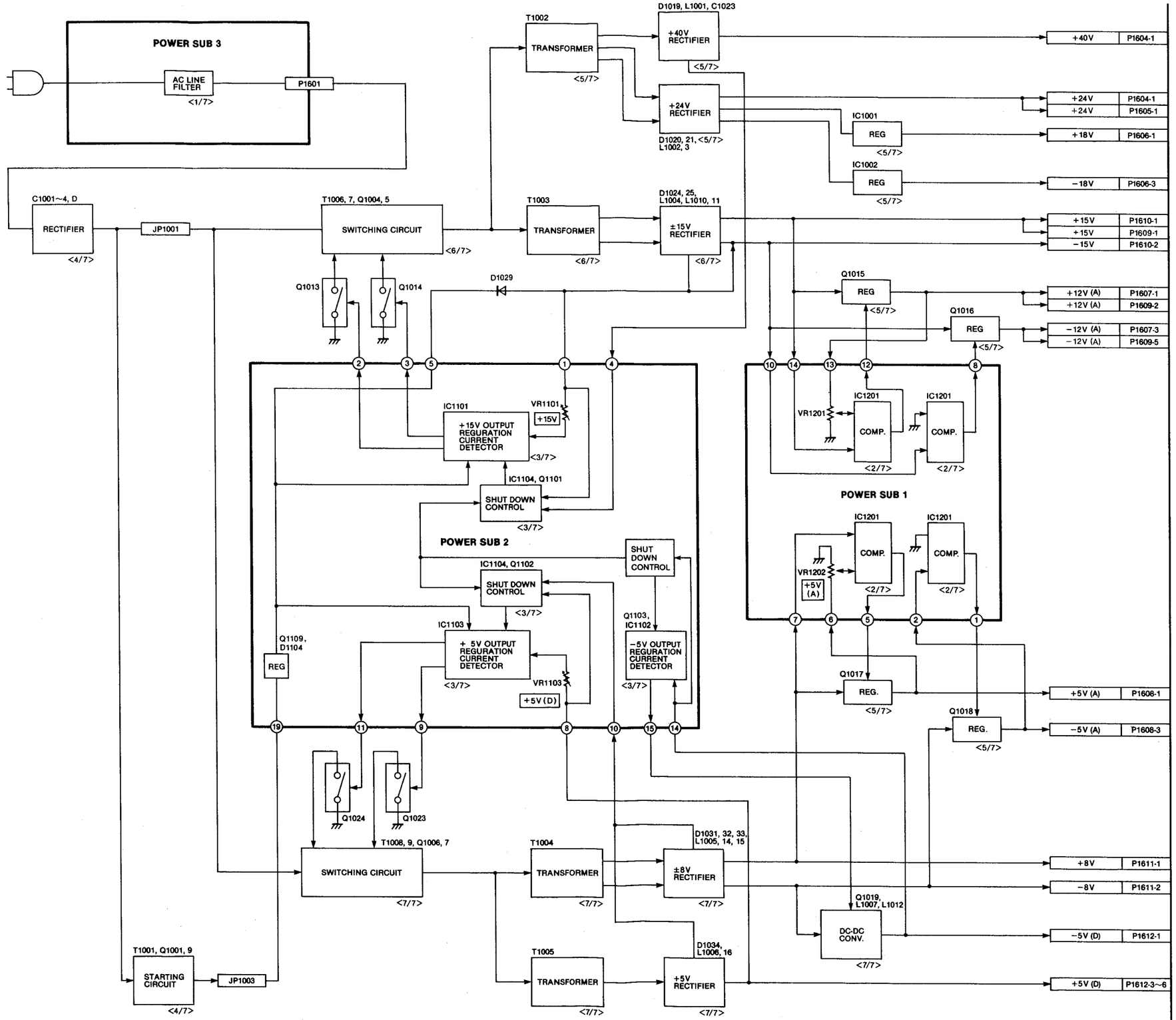

REVERSE SIDE

AUDIO OUT

4—1—18

L1 AUDIO A/D, D/A/VIDEO D/A SCHEMATIC DIAGRAM (1/10)

COMPARISON CHART BETWEEN
NTSC MODEL AND PAL MODEL
L1 AUDIO A/D D/A VIDEO D/A P.C.B.

REF. NO.	NTSC	PAL
FL4001	VLF0902 VEP84105A	VLF0904 VEP84105B

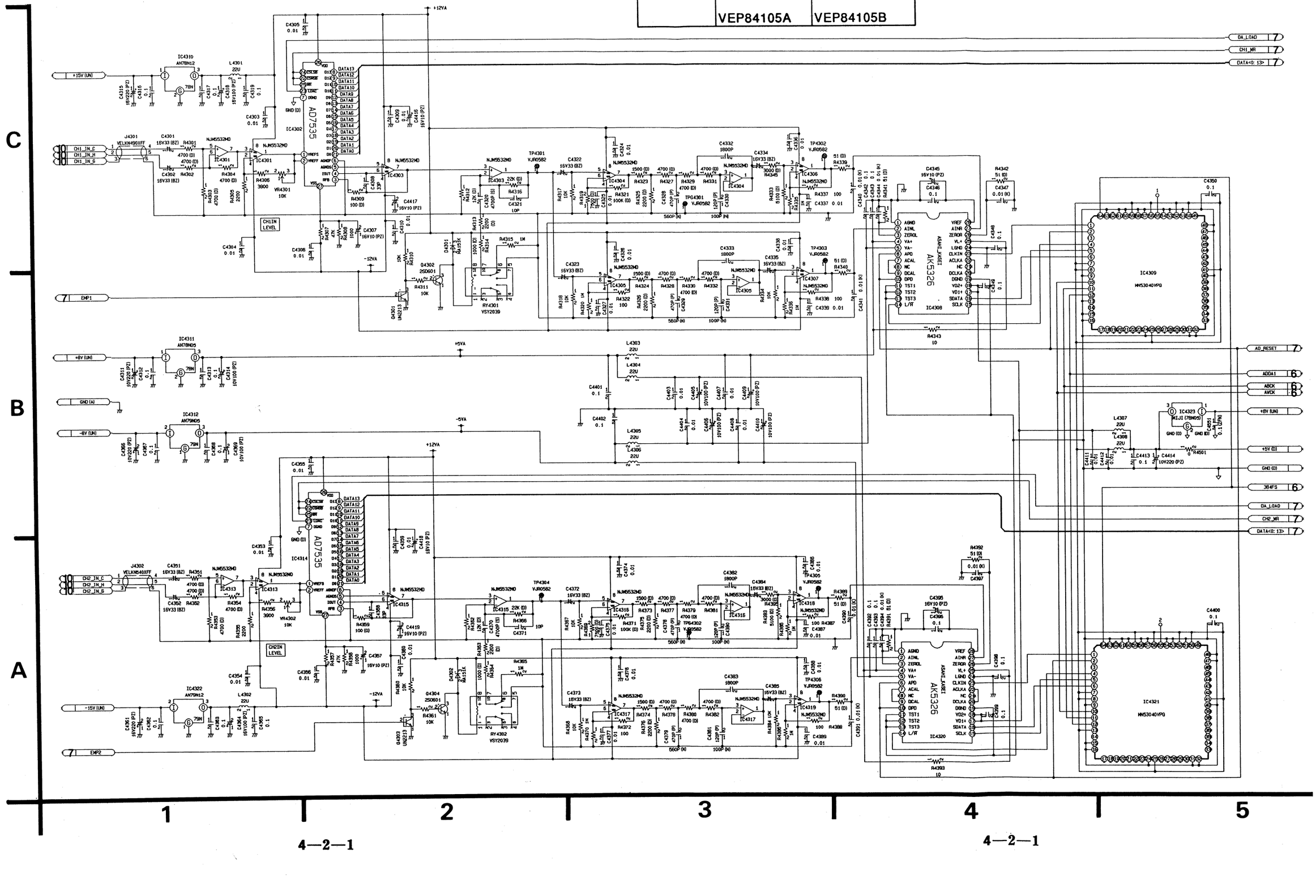

4—2—1

L1 AUDIO A/D, D/A/VIDEO D/A SCHEMATIC DIAGRAM (2/10)

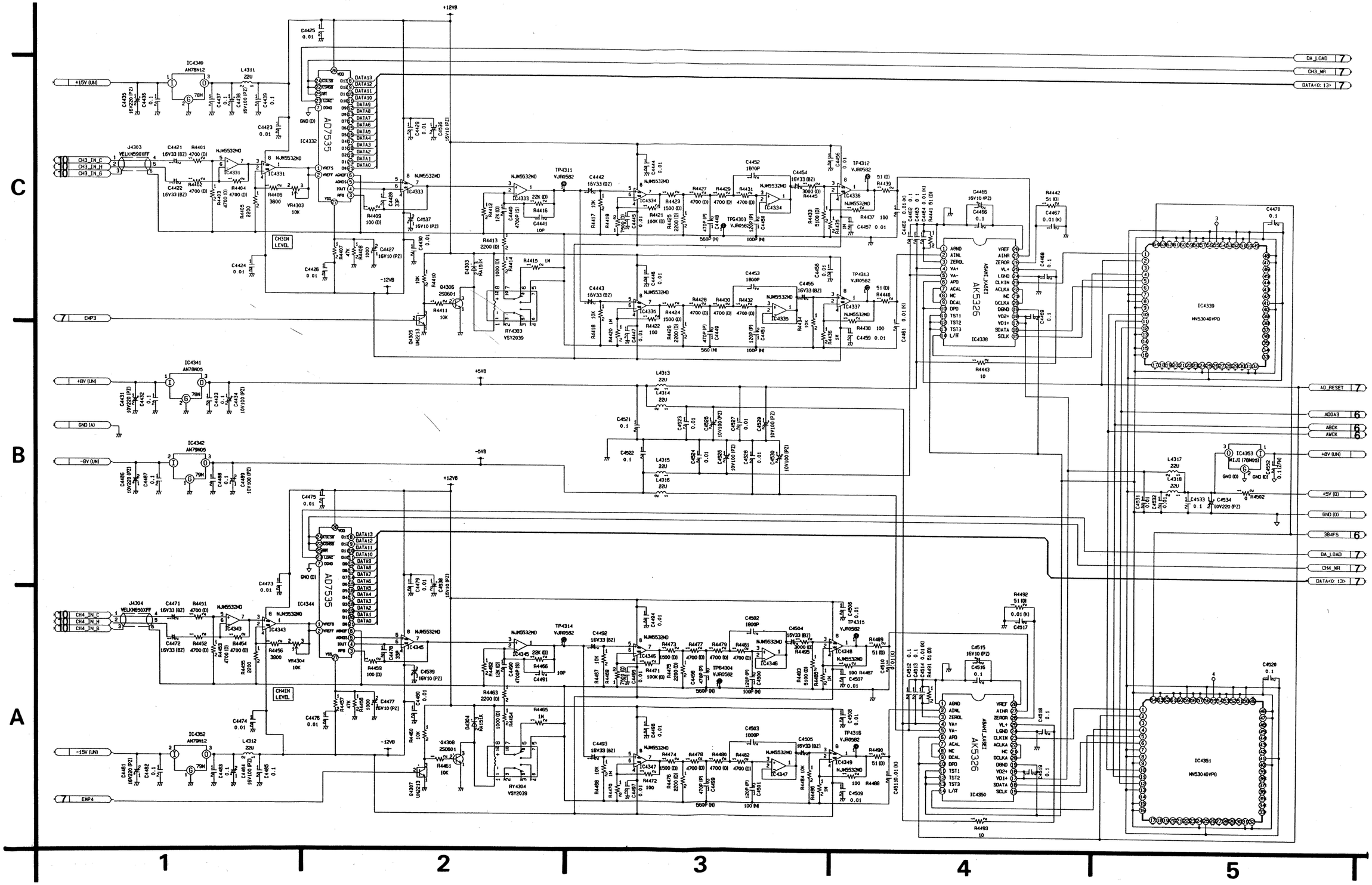

4—2—2

4—2—2

L1 AUDIO A/D, D/A/VIDEO D/A SCHEMATIC DIAGRAM (3/10)

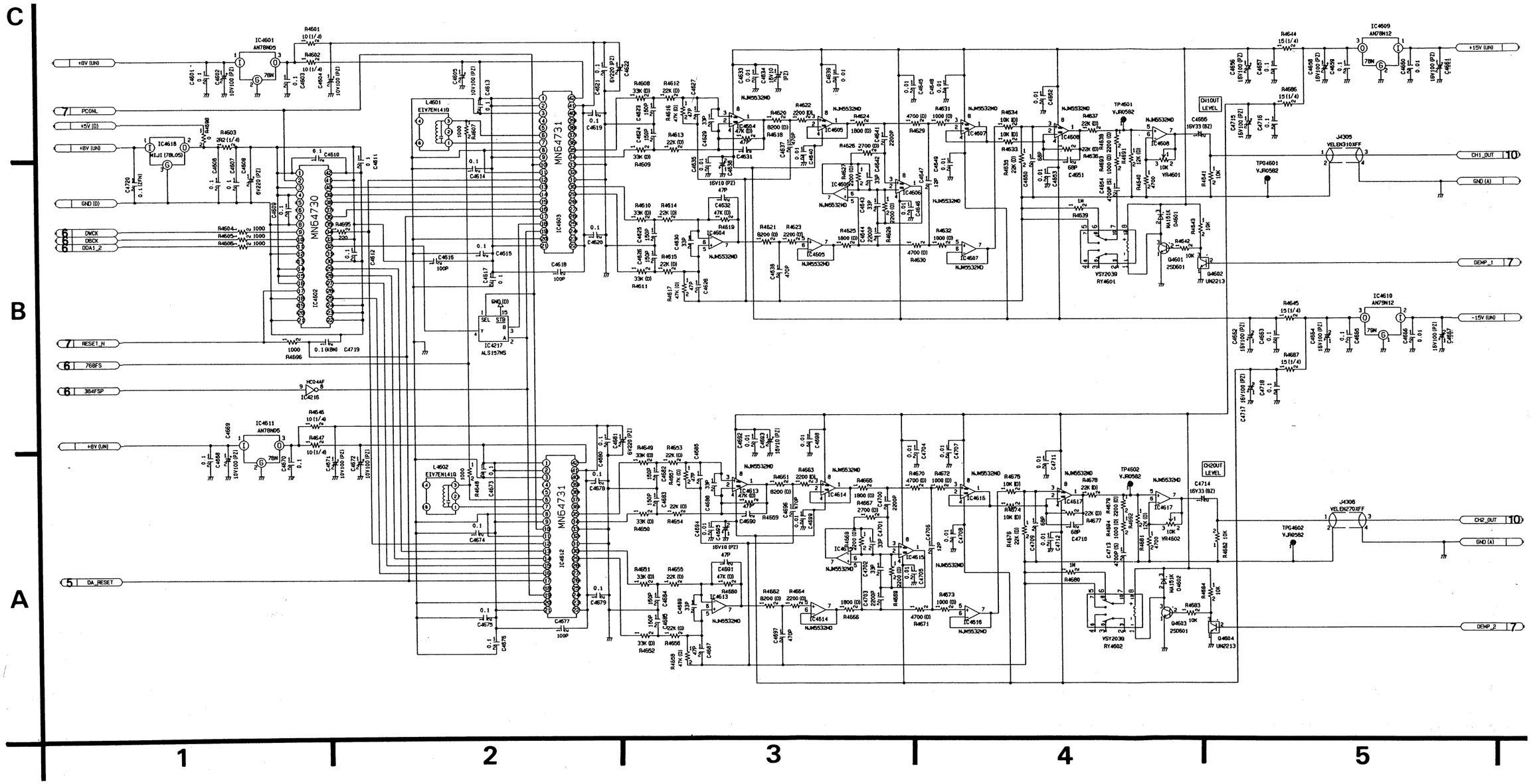

4—2—3

4—2—3

L1 AUDIO A/D, D/A/VIDEO D/A SCHEMATIC DIAGRAM (4/10)

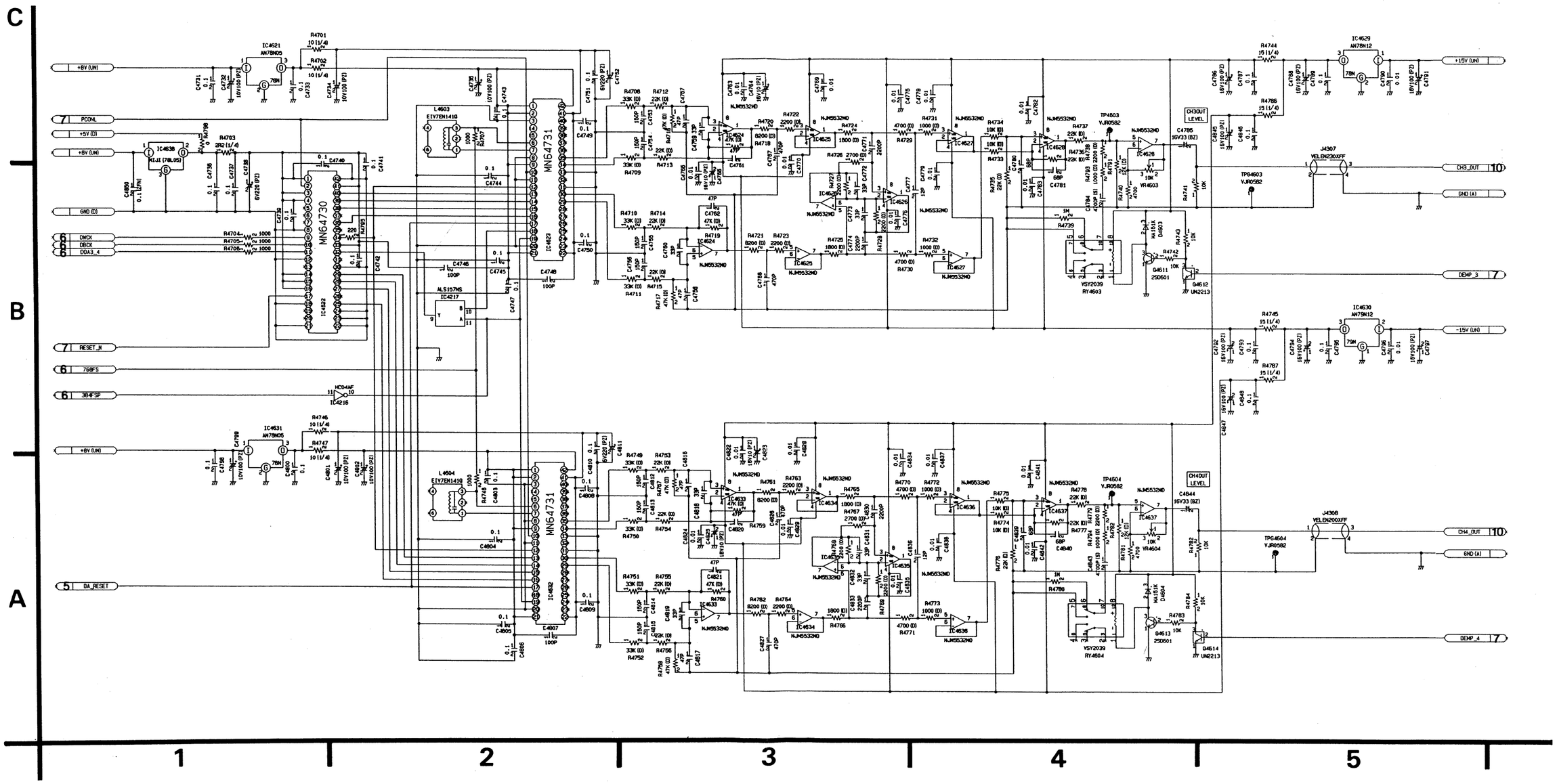

4—2—4

4—2—4

L1 AUDIO A/D, D/A/VIDEO D/A SCHEMATIC DIAGRAM (5/10)

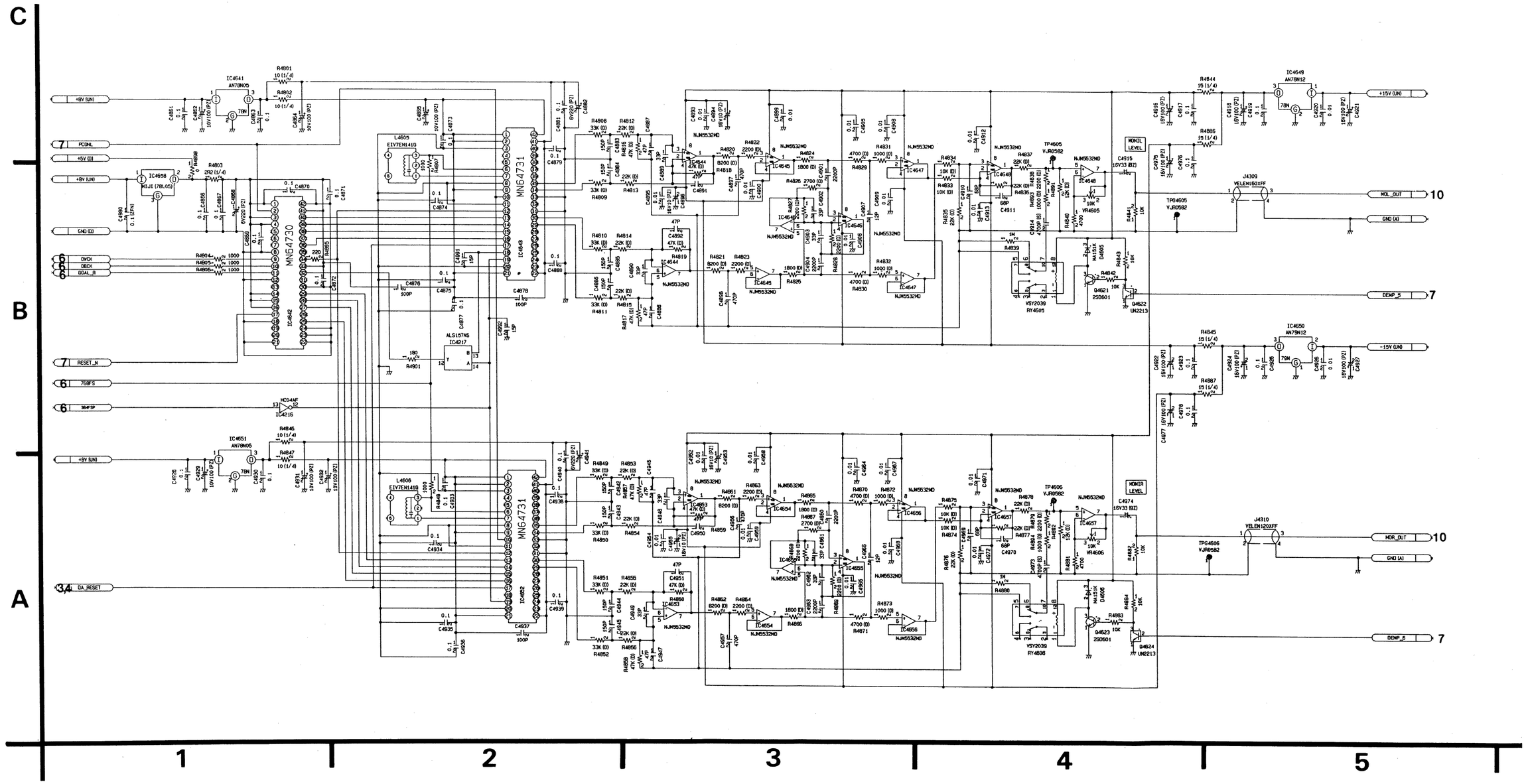

4—2—5

4—2—5

L1 AUDIO A/D, D/A/VIDEO D/A SCHEMATIC DIAGRAM (6/10)

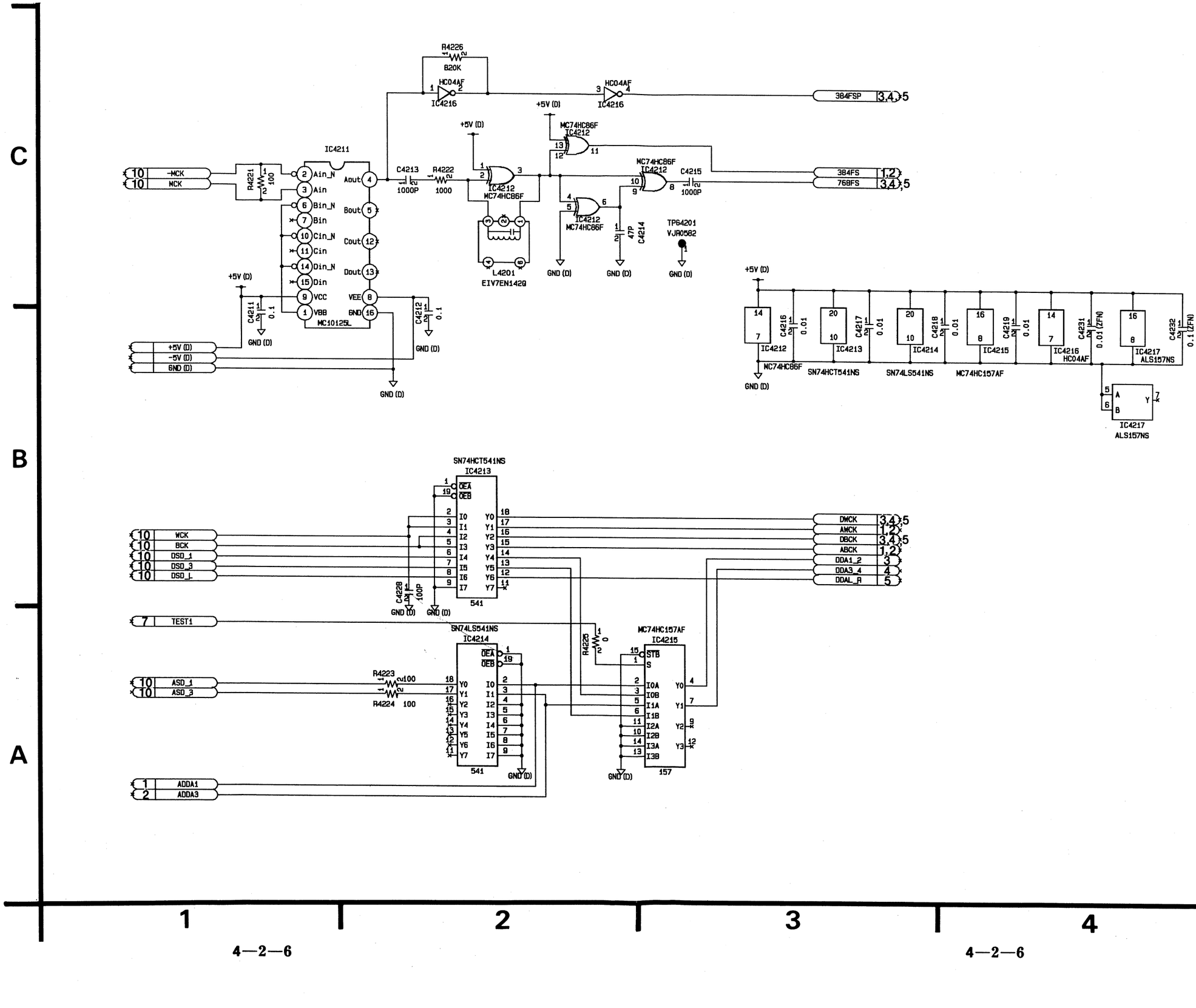

4—2—6

4—2—6

L1 AUDIO A/D, D/A/VIDEO D/A SCHEMATIC DIAGRAM (7/10)

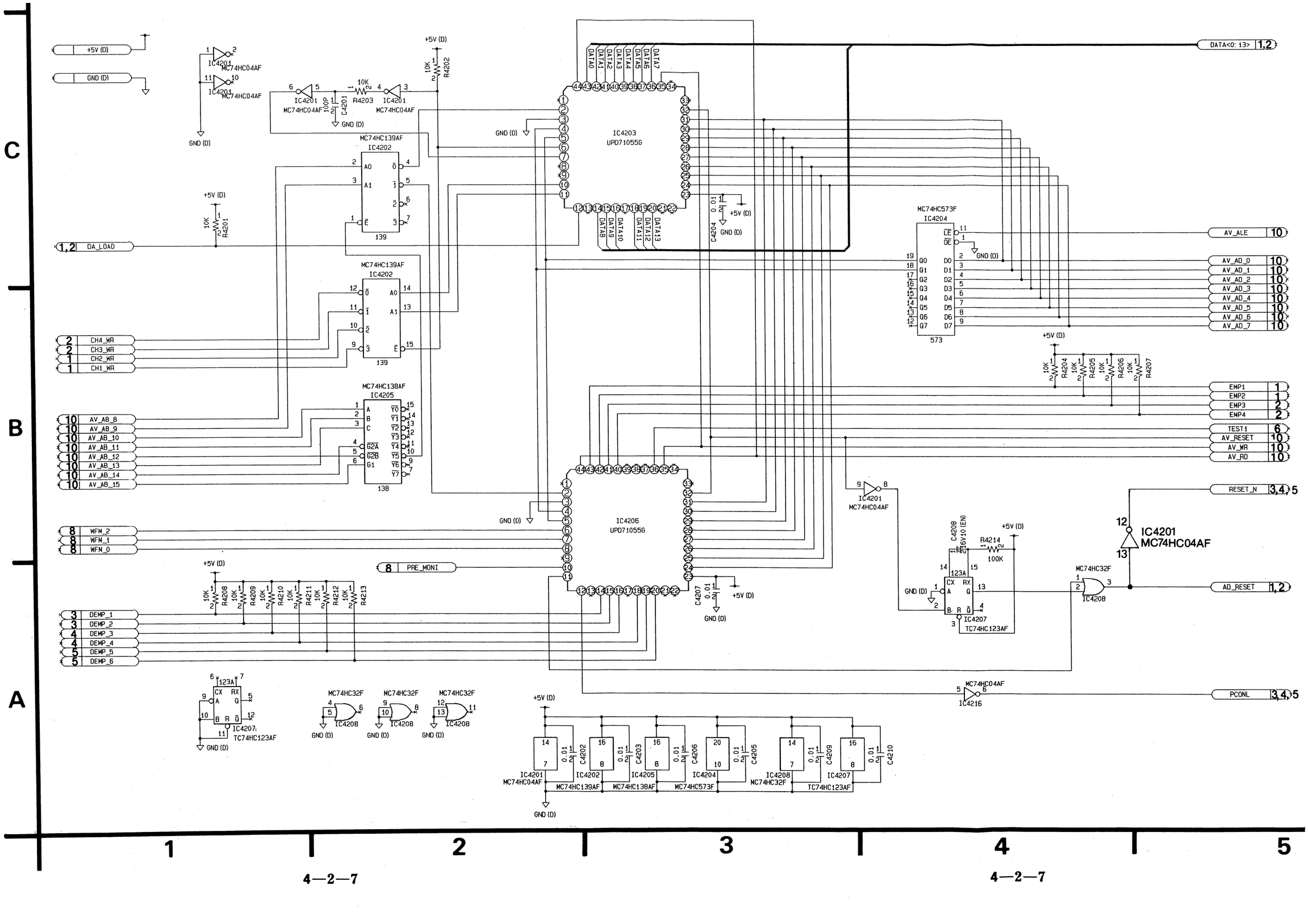

L1 AUDIO A/D, D/A/VIDEO D/A SCHEMATIC DIAGRAM (8/10)

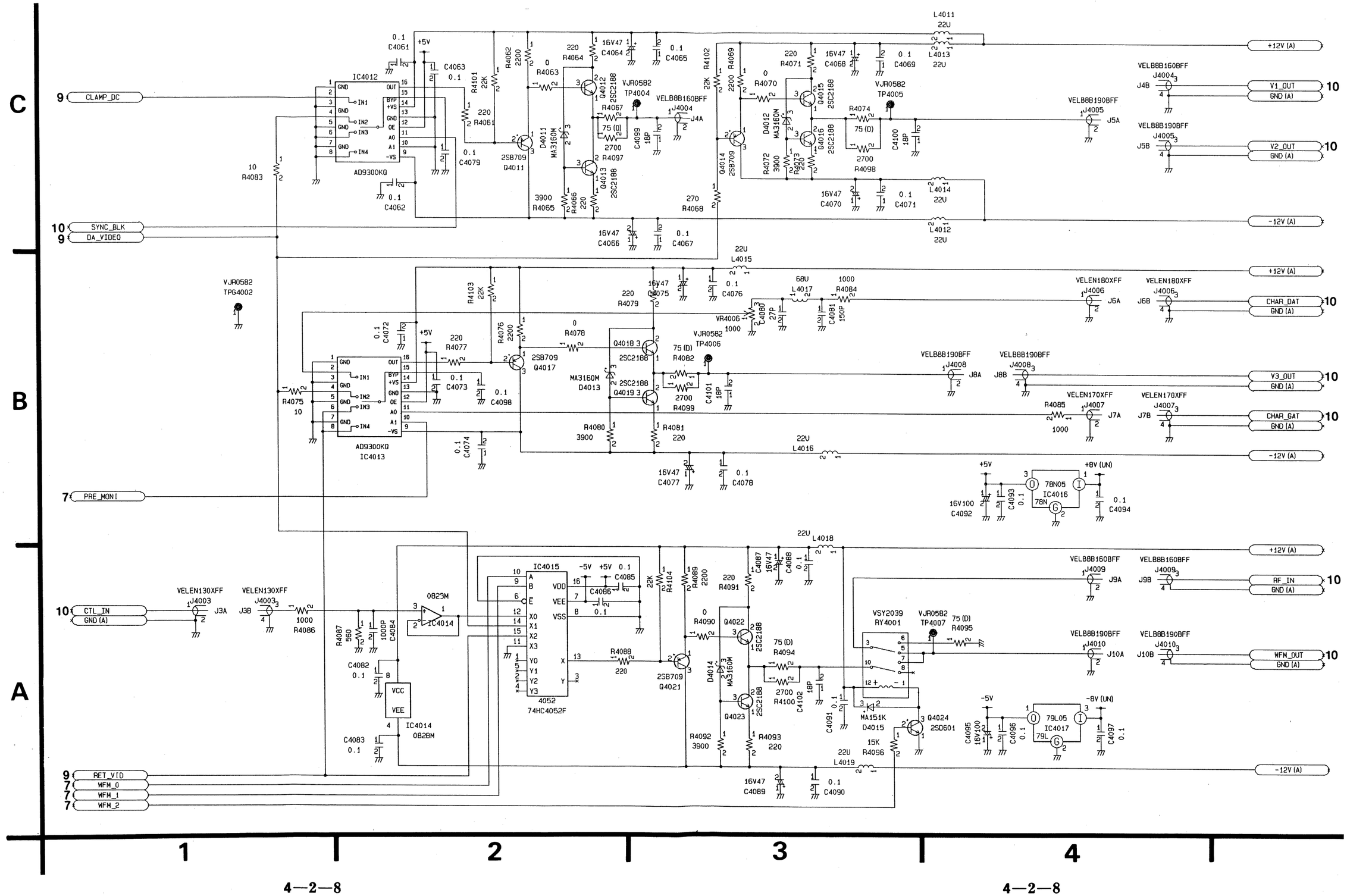

L1 AUDIO A/D, D/A/VIDEO D/A SCHEMATIC DIAGRAM (9/10)

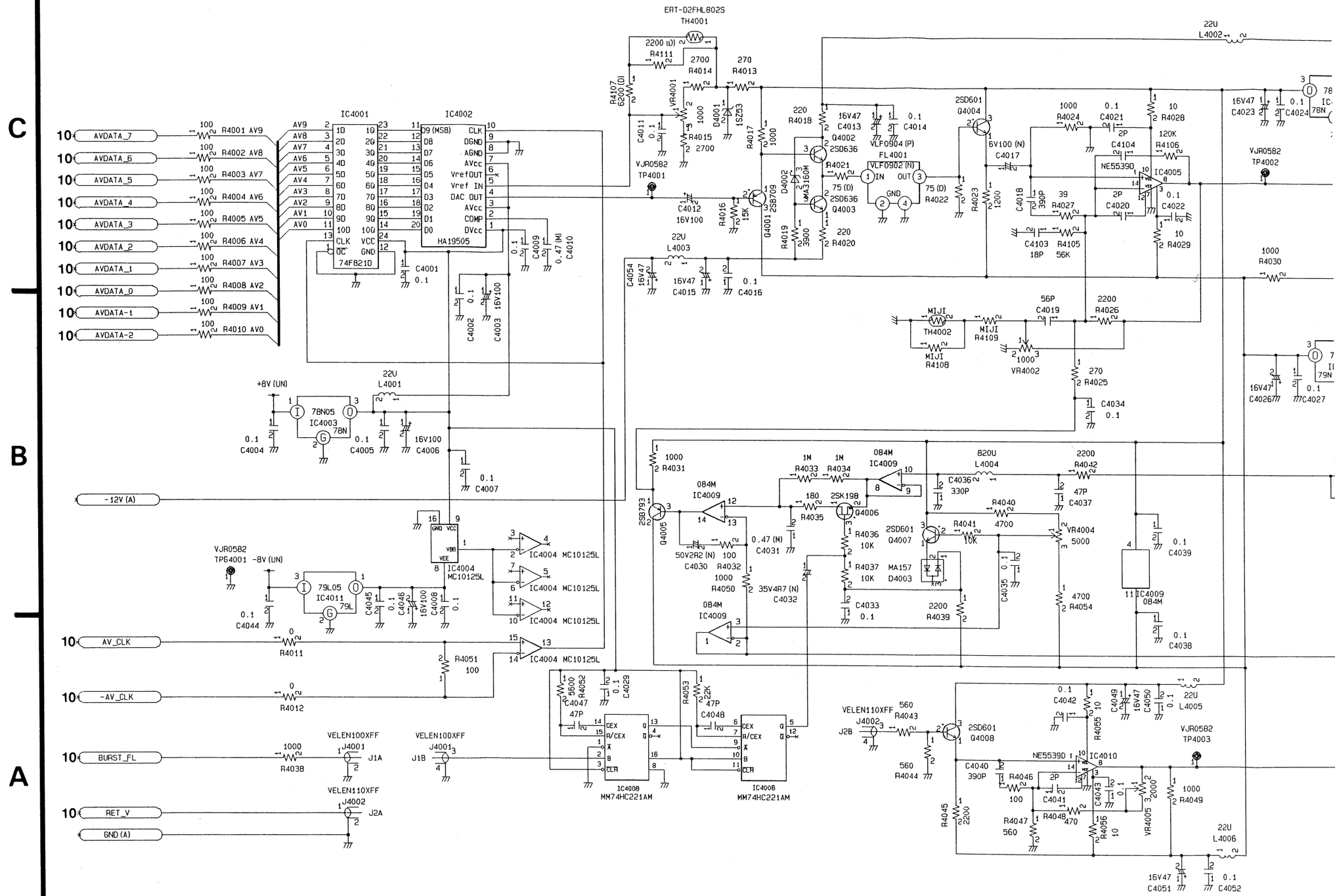

4—2—9

SCHEMATIC DIAGRAM (9/10)

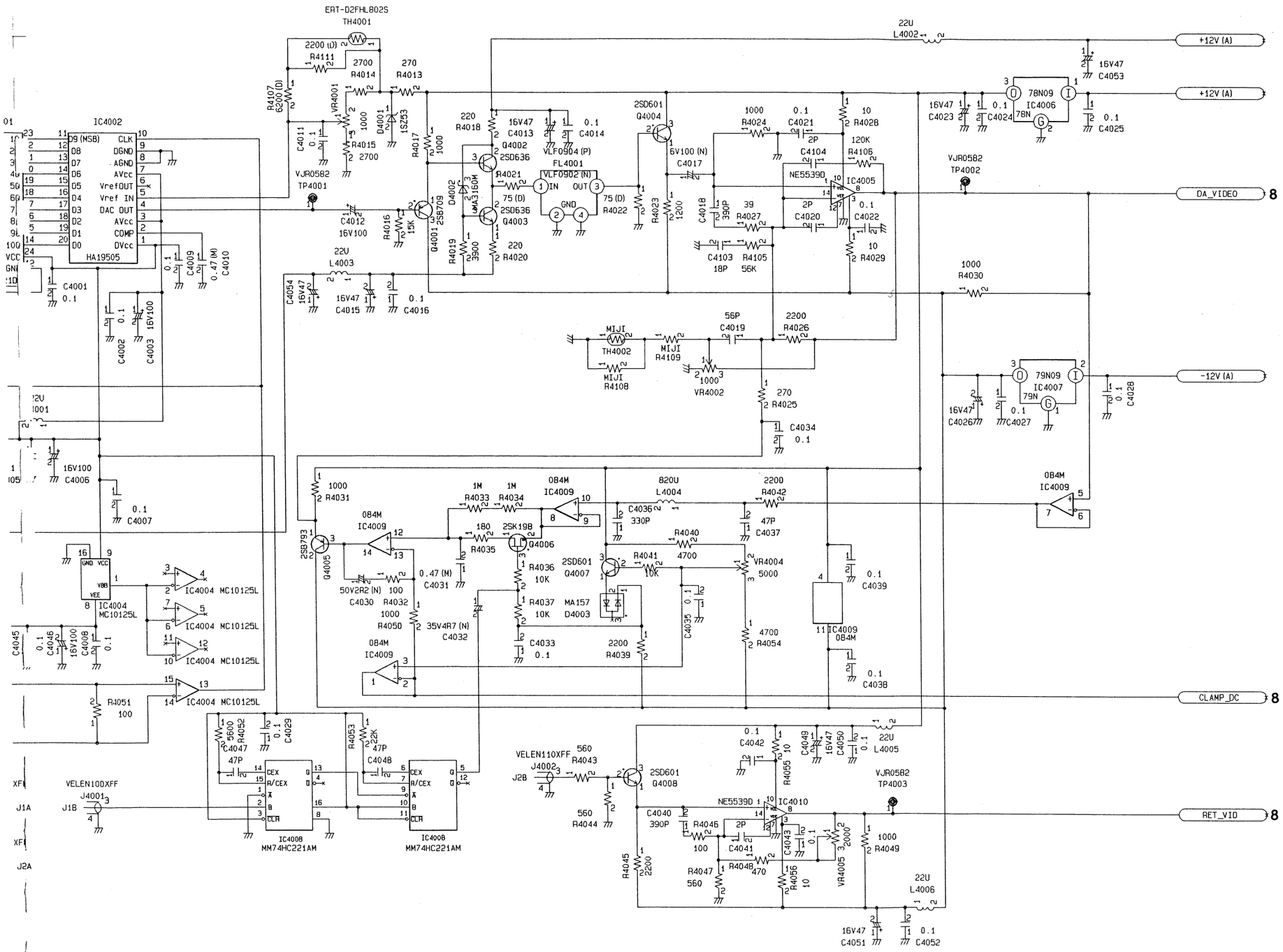

2 3 4 5

NTSC

L1 WAVEFORMS NTSC

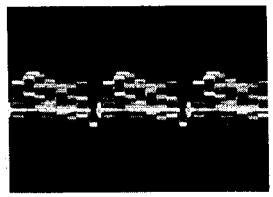

TP4001 E-E2
500mV/20μsec. div.

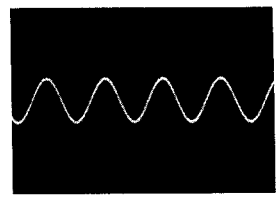

TP4304 E-E2
500mV/500μsec. div.

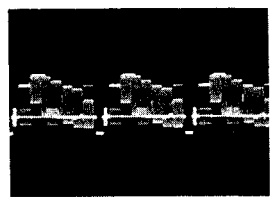

TP4002 E-E2
(TP4003, TP4004, TP4005, TP4007)
1V/20μsec. div.

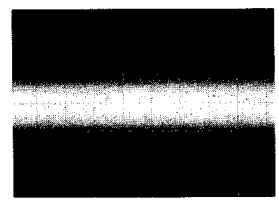

TP4311 E-E2
(TP4312, TP4313, TP4314, TP4315, TP4316)
20mV/20μsec. div.

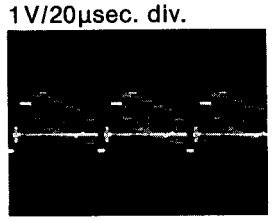

TP4006 E-E2
500mV/20μsec. div.

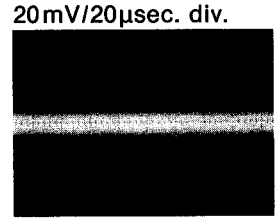

TP4603 E-E2
(TP4604)
20mV/500μsec. div.

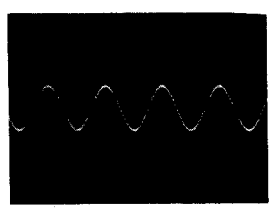

TP4301 E-E2
500mV/500μsec. div.

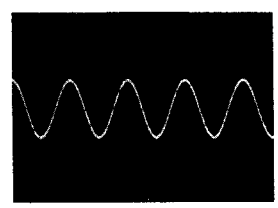

TP4605 E-E2
(TP4606)
200mV/500μsec. div.

TP4302 E-E2
(TP4305)
2V/500μsec. div.

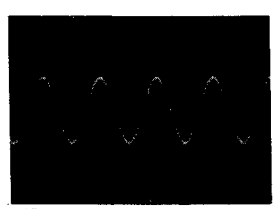

TP4303 E-E2
(TP4306, TP4601, TP4602)
200mV/500μsec. div.

PAL

L1 WAVEFORMS PAL

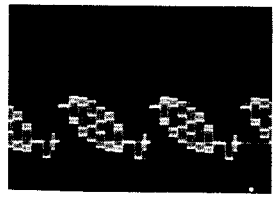

TP4001 E-E2
500mV/20μsec. div.

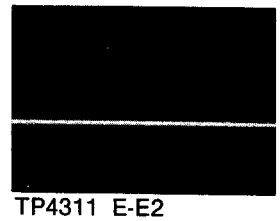

TP4311 E-E2
(TP4312, TP4313, TP4314, TP4315, TP4316)
20mV/20μsec. div.

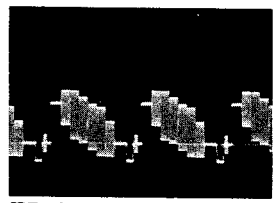

TP4002 E-E2
(TP4003, TP4004, TP4005, TP4006, TP4007)
1V/20μsec. div.

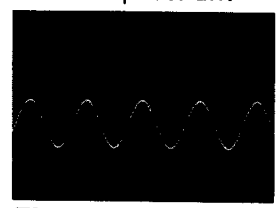

TP4601 E-E2
(TP4602–TP4606)
1V/500μsec. div.

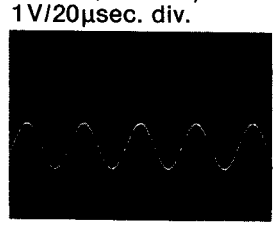

TP4301 E-E2
(TP4304)
2V/500μsec. div.

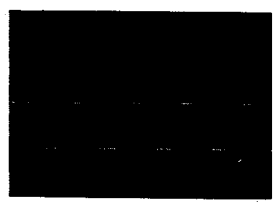

TP4302 E-E2
(TP4305)
5V/500μsec. div.

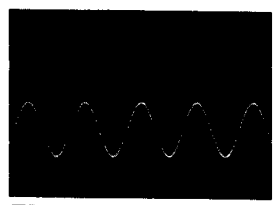

TP4303 E-E2
(TP4306)
1V/500μsec. div.

10/10) [L MOTHER (P001, P002) SCHEMATIC DIAGRAM (1/7) FOR L1]

P001		L 1			
	B	FROM / TO			
1	GND (A)				
2	+12V (A)				
3	-12V (A)				
4	GND (A)				
5	+8V (un)				
6	-8V (un)				
7	+15V (un)				
8	-15V (un)				
9	GND (A)				
10	CH1 LINE IN C	P015-2			
11	CH2 LINE IN C	P015-5			
12	CH3 LINE IN C	P015-8			
13	CH4 LINE IN C	P015-11			
14	GND (A)				
15	CH2 LINE OUT	P010-3			
16	CH2 LINE OUT GND	P010-4			
17	MONI L OUT	P010-9			
18	MONI L OUT GND	P010-10			
19	GND (A)				
20					
21	AMCK	P003-21B			
22	$\overline{\text{AMCK}}$	P003-22B			
23	BCK	P003-23B	P019-28A		
24	AV AB 14	P003-24B	P005-24B	P007-24B	P024-15A
25	AV AB 11	P003-25B	P005-25B	P007-25B	P024-18A
26	AV AB 8	P003-26B	P005-26B	P007-26B	P024-21A
27	AV AD 5	P003-27B	P005-27B	P007-27B	P024-25A
28	AV AD 2	P003-28B	P005-28B	P007-28B	P024-28A
29	AV ALE	P003-29B	P005-29B	P007-29B	P024-22A
30	AV RESET	P003-30B	P005-30B	P007-30B	P024-9A
31					
32	GND (D)				

GND (A)
+12V (A)
-12V (A)
GND (A)
+8V (UN)
-8V (UN)
+15V (UN)
-15V (UN)
GND (A)
CH1_IN_C 1
CH2_IN_C 1
CH3_IN_C 2
CH4_IN_C 2
GND (A)
CH2_OUT 3
GND (A)
MOL_OUT 5
GND (A)
GND (A)

AMCK 6
AMCK_L 6
ABCK 6
AV_AB_14 7
AV_AB_11 7
AV_AB_8 7
AV_AD_5 7
AV_AD_2 7
AV_ALE 7
AV_RESET 7

GND (D)

P001		L 1			
	C	FROM / TO			
1	GND (A)				
2	+12V (A)				
3	-12V (A)				
4	GND (A)				
5	+8V (un)				
6	-8V (un)				
7	+15V (un)				
8	-15V (un)				
9	GND (A)				
10	CH1 LINE IN H	P015-1			
11	CH2 LINE IN H	P015-4			
12	CH3 LINE IN H	P015-7			
13	CH4 LINE IN H	P015-10			
14	GND (A)				
15	CH3 LINE OUT	P010-5			
16	CH3 LINE OUT GND	P010-6			
17	MONI R OUT	P010-11			
18	MONI R OUT GND	P010-12			
19	GND (A)				
20					
21					
22					
23	WCK	P003-21C	P019-27A		
24	AV AB 15	P003-24C	P005-24C	P007-24C	P024-14A
25	AV AB 12	P003-25C	P005-25C	P007-25C	P024-17A
26	AV AB 9	P003-26C	P005-26C	P007-26C	P024-20A
27	AV AD 6	P003-27C	P005-27C	P007-27C	P024-24A
28	AV AD 3	P003-28C	P005-28C	P007-28C	P024-27A
29	AV AD 0	P003-29C	P005-29C	P007-29C	P024-30A
30	AV WR	P003-30C	P005-30C	P007-30C	P024-11A
31					
32	GND (D)				

GND (A)
CH1_IN_H 1
CH2_IN_H 1
CH3_IN_H 2
CH4_IN_H 2
GND (A)
CH3_OUT 4
GND (A)
MOR_OUT 5
GND (A)
GND (A)

AWCK 6
AV_AB_15 7
AV_AB_12 7
AV_AB_9 7
AV_AD_6 7
AV_AD_3 7
AV_AD_0 7
AV_WR 7

GND (D)

GND (A)
+12V (A)
-12V (A)
GND (A)
+8V (UN)
-8V (UN)
+15V (UN)
-15V (UN)

C4225 25V100 (PZ)
C4224 25V100 (PZ)
C4223 16V100 (PZ)
C4222 16V100 (PZ)
C4221 16V100 (PZ)
C4220 16V100 (PZ)

P002		L 1			
	B	FROM / TO			
1	GND (D)				
2					
3	DSD L	P024-26B			
4					
5					
6					
7					
8					
9					
10					
11	AV DATA 6	P008-11B			
12	AV DATA 3	P008-12B			
13	AV DATA 0	P008-13B			
14	$\overline{\text{AV CLK 0}}$	P008-14B			
15	GND (A)				
16	RF WFM	P012-3			
17	RF WFM GND	P012-4			
18	VIDEO 2 OUT	P014-3			
19	VIDEO 2 OUT GND	P014-4			
20	CHAR SIG	P019-12A			
21					
22					
23					
24					
25					
26					
27	GND (D)				
28	+5V (D)				
29	+5V (D)				
30	-5V (D)				
31	GND (D)				
32	GND (D)				

GND (D)

DSD_L 6

AVDATA_6 9
AVDATA_3 9
AVDATA_0 9
AV_CLK_L 9
GND (A)
RF_IN 8
GND (A)
V2_OUT 8
GND (A)
CHAR_DAT 8
GND (A)
GND (A)

GND (D)
+5V (D)
+5V (D)
-5V (D)
GND (D)
GND (D)

P002		L 1			
	C	FROM / TO			
1	GND (D)				
2	DSD 3	P024-27B			
3					
4	ASD 3	P024-29B			
5					
6					
7					
8					
9	SYNC BLNK	P008-9C			
10	BURST FLAG	P008-10C			
11	AV DATA 7	P008-11C			
12	AV DATA 4	P008-12C			
13	AV DATA 1	P008-13C			
14	AV DATA -2	P008-14C			
15	GND (A)				
16	WF CTL	P012-5			
17	WF CTL GND	P012-6			
18	VIDEO 3 OUT	P014-5			
19	VIDEO 3 OUT GND	P014-6			
20	CHAR GATE	P019-11A			
21					
22					
23					
24					
25					
26					
27	GND (D)				
28	+5V (D)				
29	+5V (D)				
30	-5V (D)				
31	GND (D)				
32	GND (D)				

GND (D)
DSD_3 6

ASD_3 6

SYNC_BLK 8
BURST_FL 9
AVDATA_7 9
AVDATA_4 9
AVDATA_1 9
AVDATA-2 9
GND (A)
CTL_IN 8
GND (A)
V3_OUT 8
GND (A)
CHAR_GAT 8
GND (A)
GND (A)

GND (D)
+5V (D)

GND (D)

+5V (D)
-5V (D)

6V220 (PZ) C4227
26V220 (PZ) C4226

GND (D)

3 4 5 6 7

L2 VIDEO/AUDIO REC (CONNECTOR) SCHEMATIC DIAGRAM (1/19) [L MOTHER (P003, P004) SCHEMATIC DIAGRAM (2/7) FOR L2]

P003	A	L 2 FROM / TO			
1	GND (A)				
2	+12V (A)				
3	-12V (A)				
4	GND (A)				
5	DIF CK	P032-1			
6	DIF CK	P032-2			
7	INCOM HA	P007-7A			
8	INCOM FNO	P007-8A			
9	BYP1 4FSC	P007-9A			
10	BYP1 4FSC	P007-10A			
11	REF HO	P007-11A			
12	REF CS	P007-12A			
13	H RST	P007-13A			
14	INCOM CS	P007-14A			
15	BYP2 4FSC	P005-15A			
16	BYP2 4FSC	P005-16A			
17	AU DATA IN 5	P006-12C	P024-11B		
18	AU DATA IN 2	P006-11C	P024-14B		
19	AU DATA GND	P006-13C			
20					
21					
22					
23	FSD	P019-22A			
24	AV AB 13	P001-24A	P005-24A	P007-24A	P024-16A
25	AV AB 10	P001-25A	P005-25A	P007-25A	P024-19A
26	AV AD 7	P001-26A	P005-26A	P007-26A	P024-23A
27	AV AD 4	P001-27A	P005-27A	P007-27A	P024-26A
28	AV AD 1	P001-28A	P005-28A	P007-28A	P024-29A
29	AV RD	P001-29A	P005-29A	P007-29A	P024-12A
30	ST 0	P019-26A			
31	ST 1	P019-25A			
32	GND (D)				

CONNCTOR P003

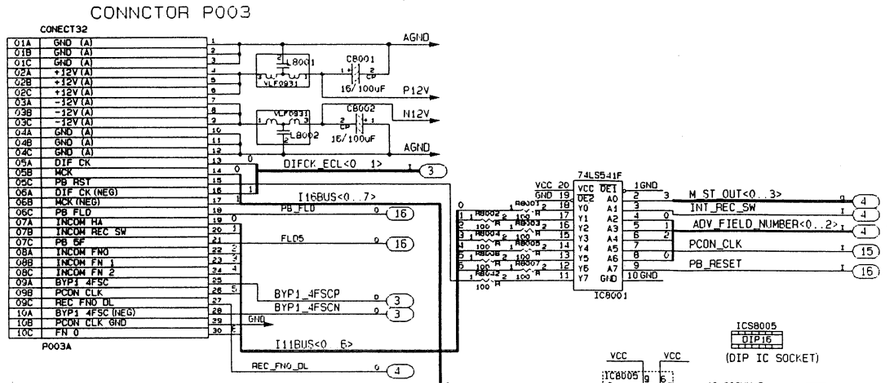

CONNCTOR P001

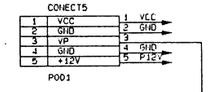

P004	A	L 2 FROM / TO			
1	GND (D)				
2	DV DATA IN 5	P017-3			
3	DV DATA IN 2	P017-6			
4	DV DATA IN -1	P017-9			
5	DV CLK I	P017-11			
6	4FSC CLK	P017-7			
7	4FSC CLK GND	P012-8			
8	AV CS	P019-29B			
9	AV CS	P019-28B			
10	AV DATA IN 5	P019-8B			
11	AV DATA IN 5	P019-7B			
12	AV DATA IN 2	P019-14B			
13	AV DATA IN 2	P019-13B			
14	AV CLK I	P019-20B			
15	AV CLK I	P019-19B			
16	AV SC	P019-27B			
17	AV SC	P019-26B			
18	AV HD	P019-22B			
19	AV RD	P019-21B			
20	CHO REC D	P018-3			
21	CHO REC D	P018-4			
22	CHO REC D GND	P018-5			
23	BYP 9	P006-23A	P008-23A		
24	BYP 6	P006-24A	P008-24A		
25	BYP 3	P006-25A	P008-25A		
26	BYP 0	P006-26A	P008-26A		
27	GND (D)				
28	+5V (D)				
29	+5V (D)				
30	-5V (D)				
31	GND (D)				
32	GND (D)				

CONNCTOR P004

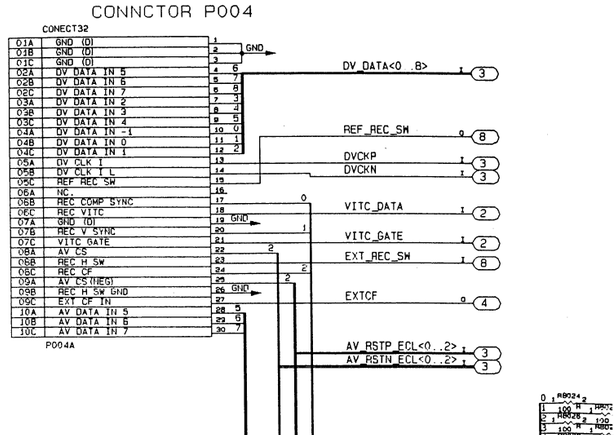

P003	B	L 2 FROM / TO			
1	GND (A)				
2	+12V (A)				
3	-12V (A)				
4	GND (A)				
5	MCK	P005-5B			
6	MCK	P005-6B			
7	INCOM REC SW	P007-7B			
8	INCOM FN 1	P007-8B			
9	PCON CLK	P007-9B	P005-13B		
10	PCON CLK GND	P007-10B	P005-14B		
11	REF FRM	P007-11B			
12	REF VS	P007-12B			
13	FSA	P019-21A			
14	INCOM LALT	P007-14B			
15	BYP2 2FSC	P005-15B			
16	BYP2 2FSC	P005-16B			
17	AU DATA IN 6	P006-13A	P024-10B		
18	AU DATA IN 3	P006-12A	P024-13B		
19	AU DATA IN 0	P006-11A	P024-16B		
20	DBCK	P032-4			
21	AMCK	P001-21B			
22	AMCK	P001-22B			
23	BCK	P001-23B	P019-28A		
24	AV AB 14	P001-24B	P005-24B	P007-24B	P024-15A
25	AV AB 11	P001-25B	P005-25B	P007-25B	P024-18A
26	AV AB 8	P001-26B	P005-26B	P007-26B	P024-21A
27	AV AD 5	P001-27B	P005-27B	P007-27B	P024-25A
28	AV AD 2	P001-28B	P005-28B	P007-28B	P024-28A
29	AV ALE	P001-29B	P005-29B	P007-29B	P024-22A
30	AV RESET	P001-30B	P005-30B	P007-30B	P024-9A
31	ST 2	P019-24A			
32	GND (D)				

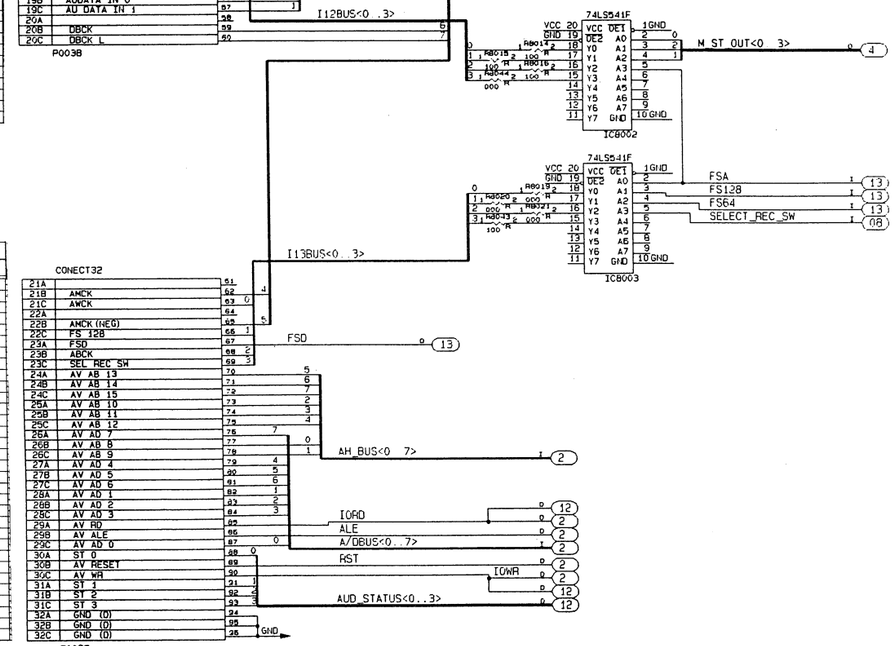

P003	C	L 2 FROM / TO			
1	GND (A)				
2	+12V (A)				
3	-12V (A)				
4	GND (A)				
5	PB RST	P005-5C	P019-30A		
6	PB FNO	P005-6C			
7	PB 5F	P005-7C	P024-18B		
8	INCOM FN 2	P007-8C			
9	REC FNO DL	P006-9C			
10	REC FN 0	P005-10C			
11	REC CF	P007-11C			
12	REF CLK	P007-12C			
13	REF CLK	P007-13C			
14	INCOM SC	P007-14C			
15	BYP3 WCK	P005-15C			
16	BYP3 WCK	P005-16C			
17	AU DATA IN 7	P006-13B	P024-9B		
18	AU DATA IN 4	P006-12B	P024-12B		
19	AU DATA IN 1	P006-11B	P024-15B		
20	DBCK	P032-5			
21	WCK	P001-23C	P019-27A		
22	FS 128	P019-29A			
23	SEL REC SW	P005-23C			
24	AV AB 15	P001-24C	P005-24C	P007-24C	P024-14A
25	AV AB 12	P001-25C	P005-25C	P007-25C	P024-17A
26	AV AB 9	P001-26C	P005-26C	P007-26C	P024-20A
27	AV AD 6	P001-27C	P005-27C	P007-27C	P024-24A
28	AV AD 3	P001-28C	P005-28C	P007-28C	P024-27A
29	AV AD 0	P001-29C	P005-29C	P007-29C	P024-30A
30	AV WR	P001-30C	P005-30C	P007-30C	P024-11A
31	ST 3	P019-23A			
32	GND (D)				

P004	B	L 2 FROM / TO			
1	GND (D)				
2	DV DATA IN 6	P017-2			
3	DV DATA IN 3	P017-5			
4	DV DATA IN 0	P017-8			
5	DV CLK I	P017-12			
6	REC COMP SYNC	P019-7A			
7	REC V SYNC	P019-6A			
8	REC H SW	P019-13A			
9	REC H SW GND				
10	AV DATA IN 6	P019-6B			
11	AV DATA IN 6	P019-5B			
12	AV DATA IN 3	P019-12B			
13	AV DATA IN 3	P019-11B			
14	AV DATA IN 0	P019-10B			
15	AV DATA IN 0	P019-17B			
16	AV VS	P019-30B			
17	AV FRM	P019-24B			
18	FRY ERASE	P019-12			
19	FV/2	P024-7B	P007-15A		
20	CH1 REC D	P018-6			
21	CH1 REC D	P018-7			
22	CH1 REC D GND	P018-8			
23	BYP 10	P006-23B	P008-23B		
24	BYP 7	P006-24B	P008-24B		
25	BYP 4	P006-25B	P008-25B		
26	BYP 1	P006-26B	P008-26B		
27	GND (D)				
28	+5V (D)				
29	+5V (D)				
30	-5V (D)				
31	GND (D)				
32	GND (D)				

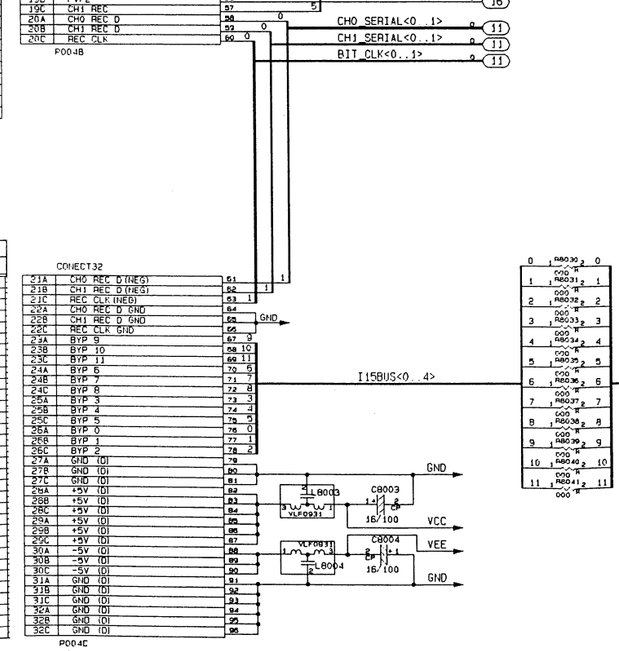

P004	C	L 2 FROM / TO			
1	GND (D)				
2	DV DATA IN 7	P017-1			
3	DV DATA IN 4	P017-4			
4	DV DATA IN 1	P017-7			
5	REF REC SW	P007-17A			
6	REC VITC	P019-9A			
7	VITC GATE	P019-8A			
8	REC CF	P019-10A			
9	EXT CF IN	P007-20B	P029-5		
10	AV DATA IN 7	P019-4B			
11	AV DATA IN 7	P019-3B			
12	AV DATA IN 4	P019-10B			
13	AV DATA IN 4	P019-9B			
14	AV DATA IN 1	P019-16B			
15	AV DATA IN 1	P019-15B			
16	AV LALT	P019-25B			
17	AV CF	P019-23B			
18	CHO REC	P018-1			
19	CH1 REC	P018-2			
20	REC CLK	P018-9			
21	REC CLK	P018-10			
22	REC CLK GND	P018-11			
23	BYP 11	P006-23C	P008-23C		
24	BYP 8	P006-24C	P008-24C		
25	BYP 5	P006-25C	P008-25C		
26	BYP 2	P006-26C	P008-26C		
27	GND (D)				
28	+5V (D)				
29	+5V (D)				
30	-5V (D)				
31	GND (D)				
32	GND (D)				

AGRAM (1/19) [L MOTHER (P003, P004) SCHEMATIC DIAGRAM (2/7) FOR L2]

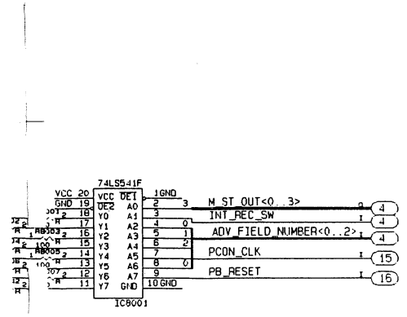

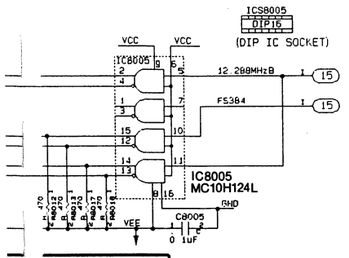

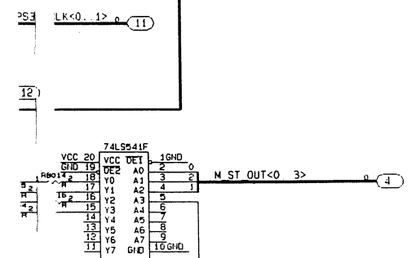

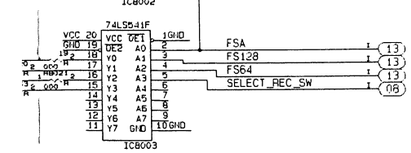

P004		L 2			
	A	FROM / TO			
1	GND (D)				
2	DV DATA IN 5	P017-3			
3	DV DATA IN 2	P017-6			
4	DV DATA IN -1	P017-9			
5	DV CLK I	P017-11			
6	4FSC CLK	P012-7			
7	4FSC CLK GND	P012-8			
8	AV CS	P019-29B			
9	AV CS	P019-28B			
10	AV DATA IN 5	P019-8B			
11	AV DATA IN 5	P019-7B			
12	AV DATA IN 2	P019-14B			
13	AV DATA IN 2	P019-13B			
14	AV CLK I	P019-20B			
15	AV CLK I	P019-19B			
16	AV SC	P019-27B			
17	AV SC	P019-26B			
18	AV HD	P019-22B			
19	AV HD	P019-21B			
20	CH0 REC D	P018-3			
21	CH0 REC D	P018-4			
22	CH0 REC D GND	P018-5			
23	BYP 9	P006-23A	P008-23A		
24	BYP 6	P006-24A	P008-24A		
25	BYP 3	P006-25A	P008-25A		
26	BYP 0	P006-26A	P008-26A		
27	GND (D)				
28	+5V (D)				
29	+5V (D)				
30	-5V (D)				
31	GND (D)				
32	GND (D)				

CONNCTOR P004

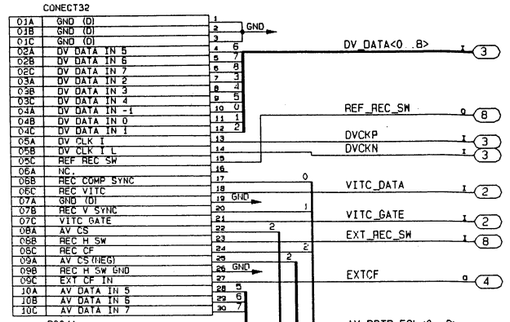

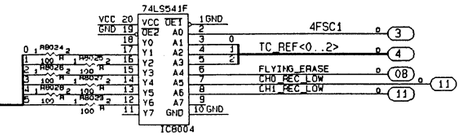

P004		L 2			
	B	FROM / TO			
1	GND (D)				
2	DV DATA IN 6	P017-2			
3	DV DATA IN 3	P017-5			
4	DV DATA IN 0	P017-8			
5	DV CLK I	P017-12			
6	REC COMP SYNC	P019-7A			
7	REC V SYNC	P019-6A			
8	REC H SW	P019-13A			
9	REC H SW GND				
10	AV DATA IN 6	P019-6B			
11	AV DATA IN 6	P019-5B			
12	AV DATA IN 3	P019-12B			
13	AV DATA IN 3	P019-11B			
14	AV DATA IN 0	P019-18B			
15	AV DATA IN 0	P019-17B			
16	AV YS	P019-30B			
17	AV FRM	P019-24B			
18	FRY ERASE	P018-12			
19	FV/2	P024-7B	P007-15A		
20	CH1 REC D	P018-6			
21	CH1 REC D	P018-7			
22	CH1 REC D GND	P018-8			
23	BYP 10	P006-23B	P008-23B		
24	BYP 7	P006-24B	P008-24B		
25	BYP 4	P006-25B	P008-25B		
26	BYP 1	P006-26B	P008-26B		
27	GND (D)				
28	+5V (D)				
29	+5V (D)				
30	-5V (D)				
31	GND (D)				
32	GND (D)				

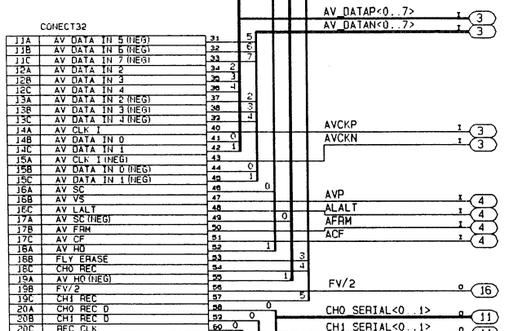

P004		L 2			
	C	FROM / TO			
1	GND (D)				
2	DV DATA IN 7	P017-1			
3	DV DATA IN 4	P017-4			
4	DV DATA IN 1	P017-7			
5	REF REC SW	P007-17A			
6	REC VITC	P019-9A			
7	VITC GATE	P019-8A			
8	REC CF	P019-10A			
9	EXT CF IN	P007-20B	P029-5		
10	AV DATA IN 7	P019-4B			
11	AV DATA IN 7	P019-3B			
12	AV DATA IN 4	P019-10B			
13	AV DATA IN 4	P019-9B			
14	AV DATA IN 1	P019-16B			
15	AV DATA IN 1	P019-15B			
16	AV LALT	P019-25B			
17	AV CF	P019-23B			
18	CH0 REC	P018-1			
19	CH1 REC	P018-2			
20	REC CLK	P018-9			
21	REC CLK	P018-10			
22	REC CLK GND	P018-11			
23	BYP 11	P006-23C	P008-23C		
24	BYP 8	P006-24C	P008-24C		
25	BYP 5	P006-25C	P008-25C		
26	BYP 2	P006-26C	P008-26C		
27	GND (D)				
28	+5V (D)				
29	+5V (D)				
30	-5V (D)				
31	GND (D)				
32	GND (D)				

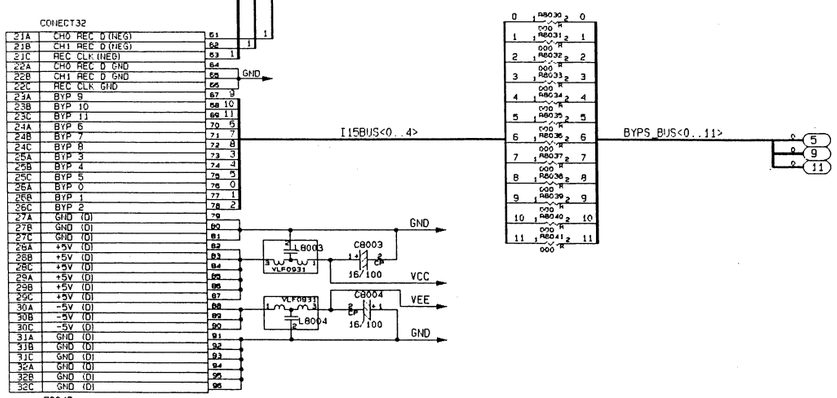

COMPARISON CHART BETWEEN
NTSC MODEL AND PAL MODEL
L2 VIDEO/AUDIO REC P.C.B.

REF. NO.	NTSC	PAL
IC8059	VSI0780B	VSI0774B
IC8114	VSI0951B	VSI0950B
IC8152	VSI0953	VSI0952B
IC8154	VSI0797	VSI0796A
IC8351	VSI0775B	VSI0769B
IC8352	VSI0792	VSI0790
IC8353	VSI0791	VSI0789
IC8357	VSI0777B	VSI0771B
IC8358	VSI0776B	VSI0770B
IC8360	VSI0778B	VSI0772B
IC8362	VSI0778B	VSI0772B
IC8503	VSI0779B	VSI0773B
IC8509	VSX0468	VSX0467
IC8751	VSI0934B	VSI0933A
IC8752	VSI0936A	VSI0935A
IC8753	VSI0938D	VSI0937D
	VEP88072C	VEP88072D

L2 VIDEO/AUDIO REC (SYS IF) SCHEMATIC DIAGRAM (2/19)

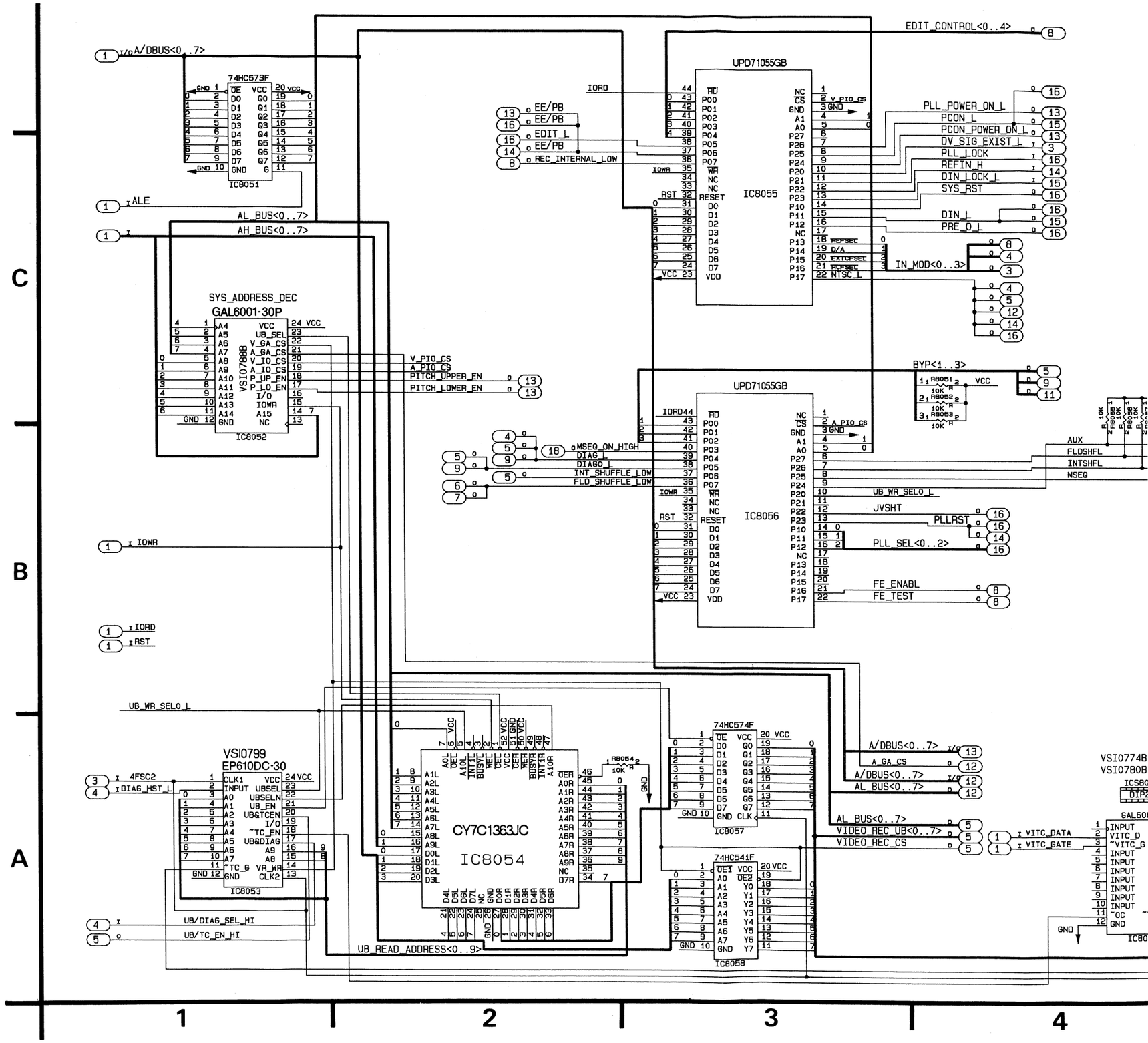

C (SYS IF) SCHEMATIC DIAGRAM (2/19)

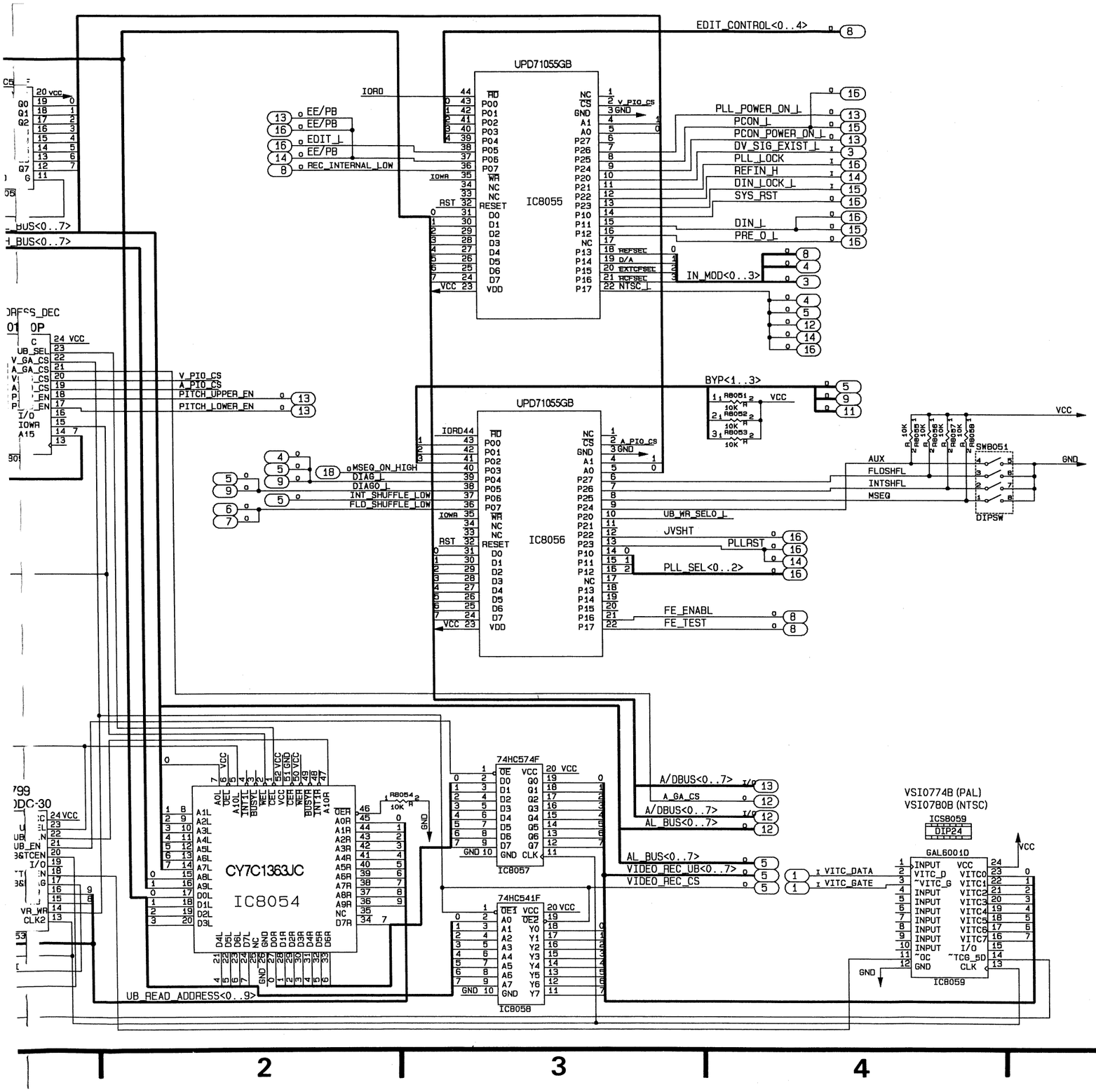

L2 VIDEO/AUDIO REC (INPUT IF) SCHEMATIC DIAGRAM (3/19)

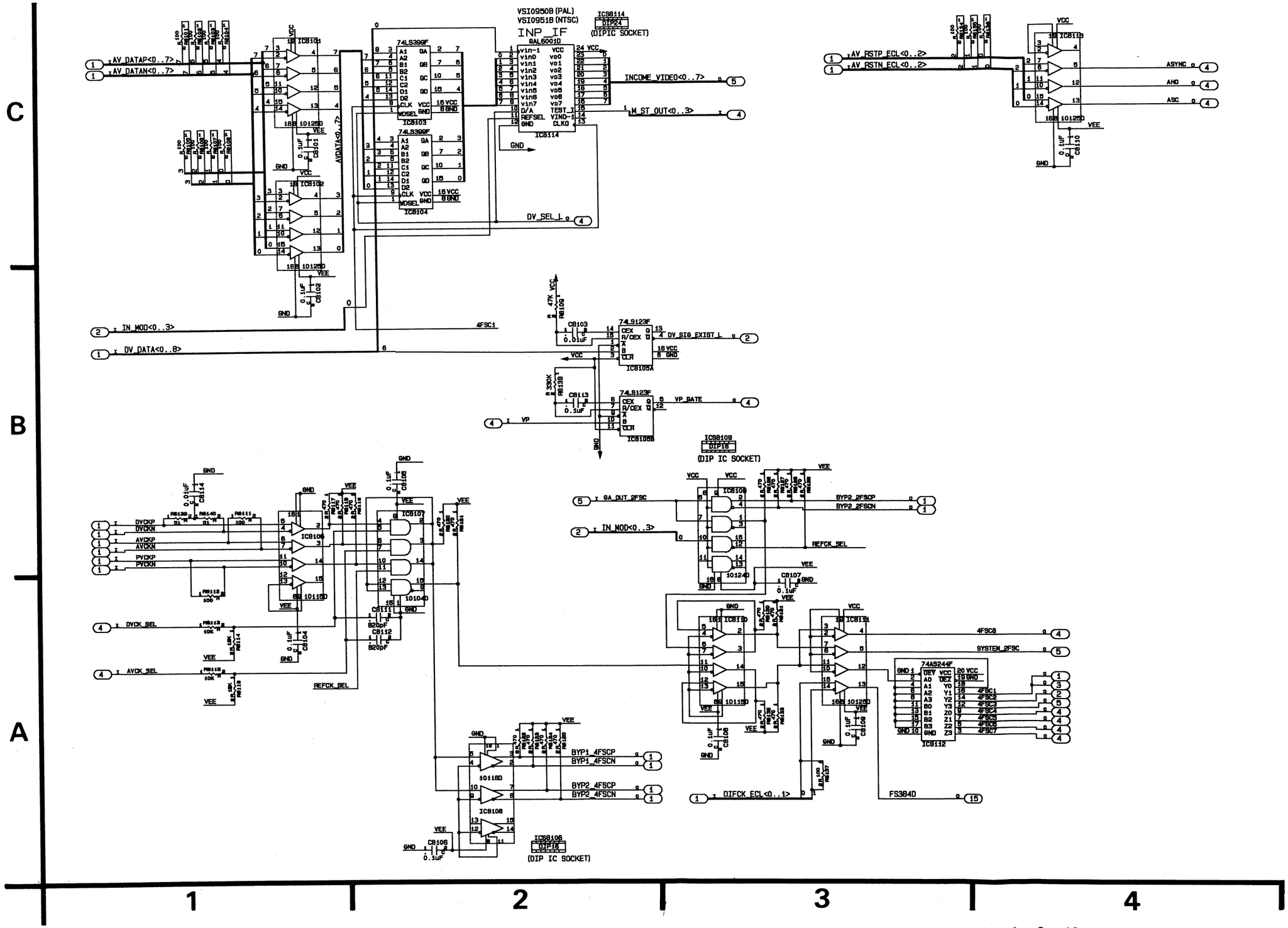

4—2—13

L2 VIDEO/AUDIO REC (MASTER COUNTER) SCHEMATIC DIAGRAM (4/19)

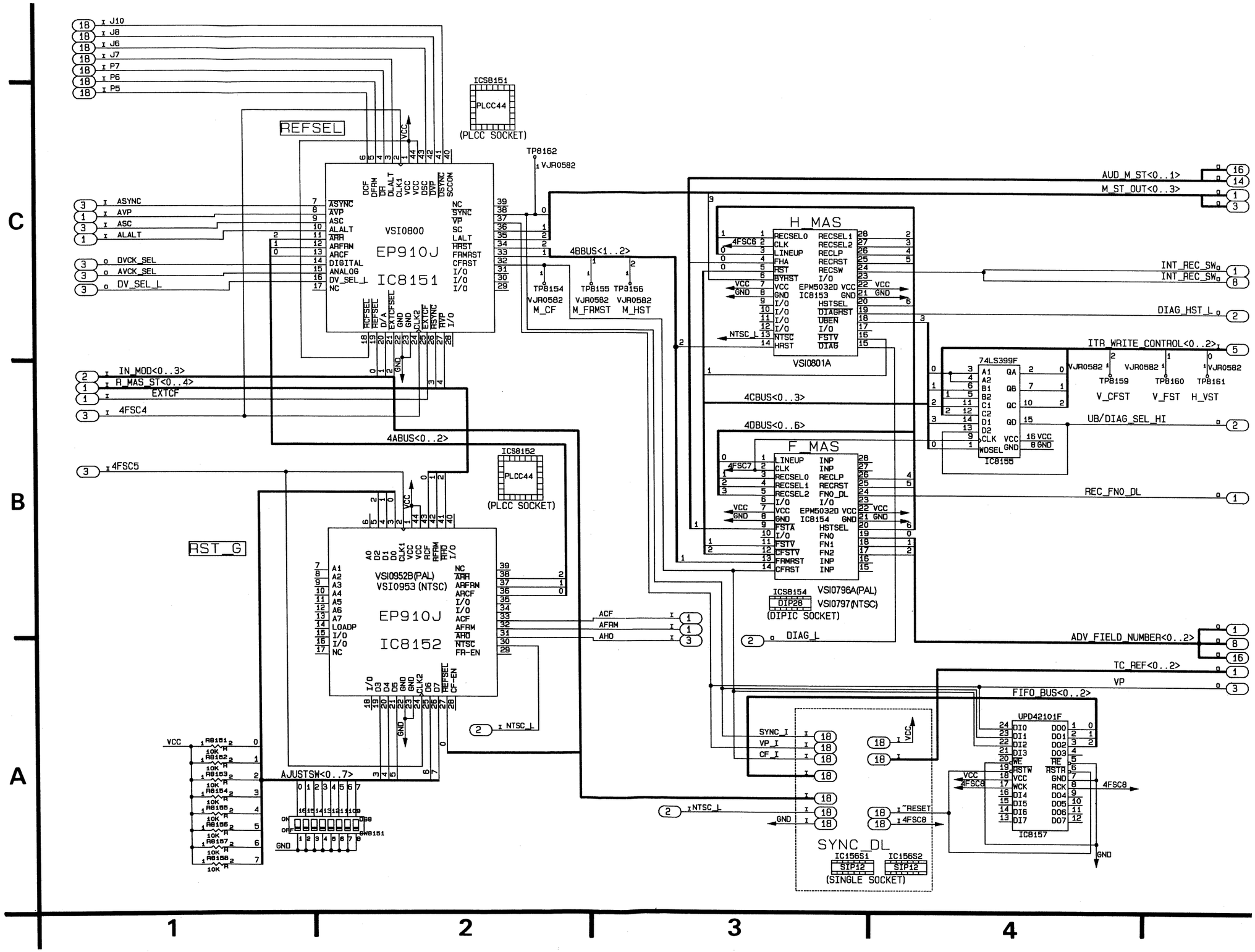

4—2—14

L2 VIDEO/AUDIO REC (INTRA-SHUFFLE & OUTER ENCODE) SCHEMATIC DIAGRAM (5/19)

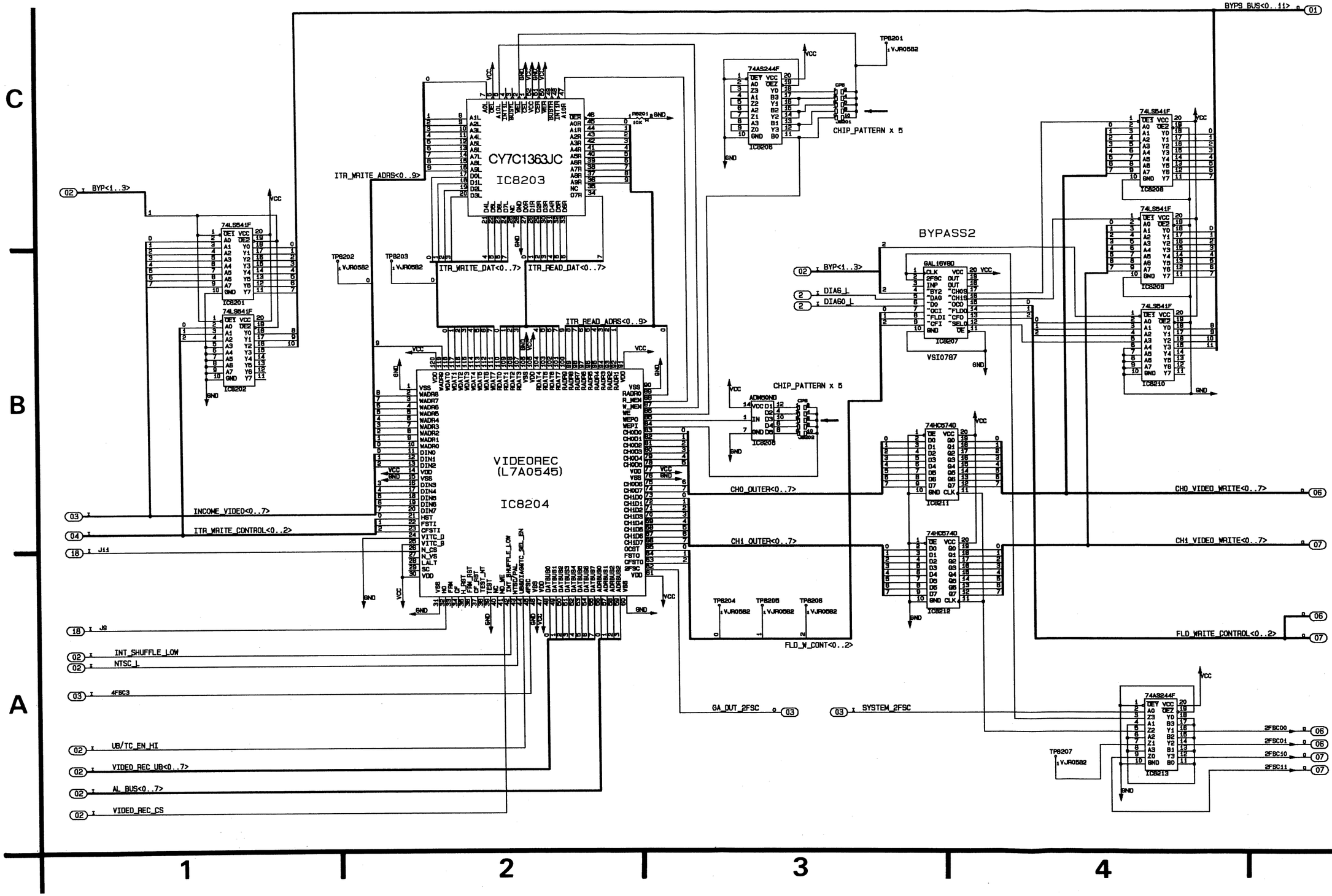

4—2—15

4—2—15

L2 VIDEO/AUDIO REC (CH0 SHUFFLING MEMORY) SCHEMATIC DIAGRAM (6/19)

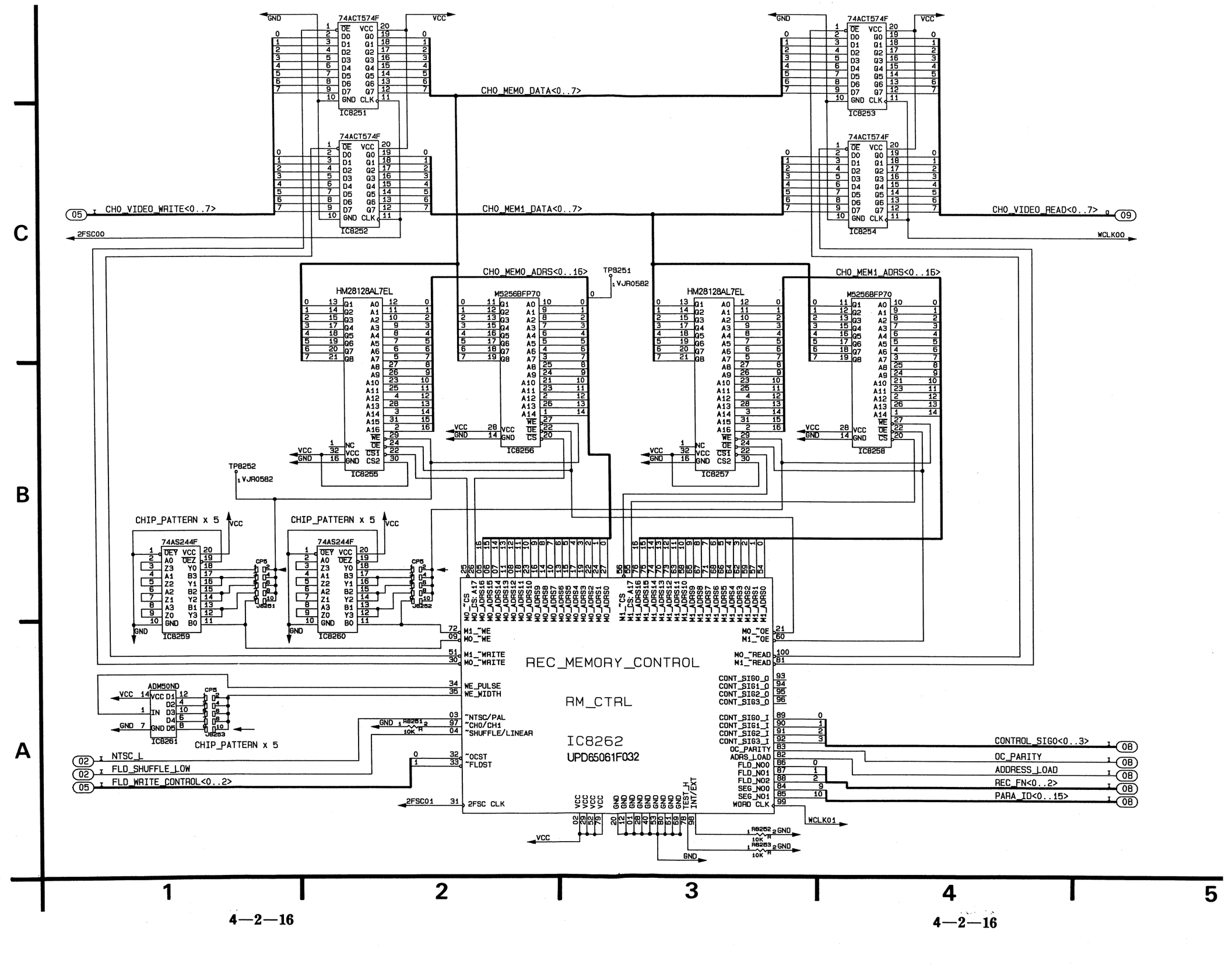

4—2—16

L2 VIDEO/AUDIO REC (CH1 SHUFFLING MEMORY) SCHEMATIC DIAGRAM (7/19)

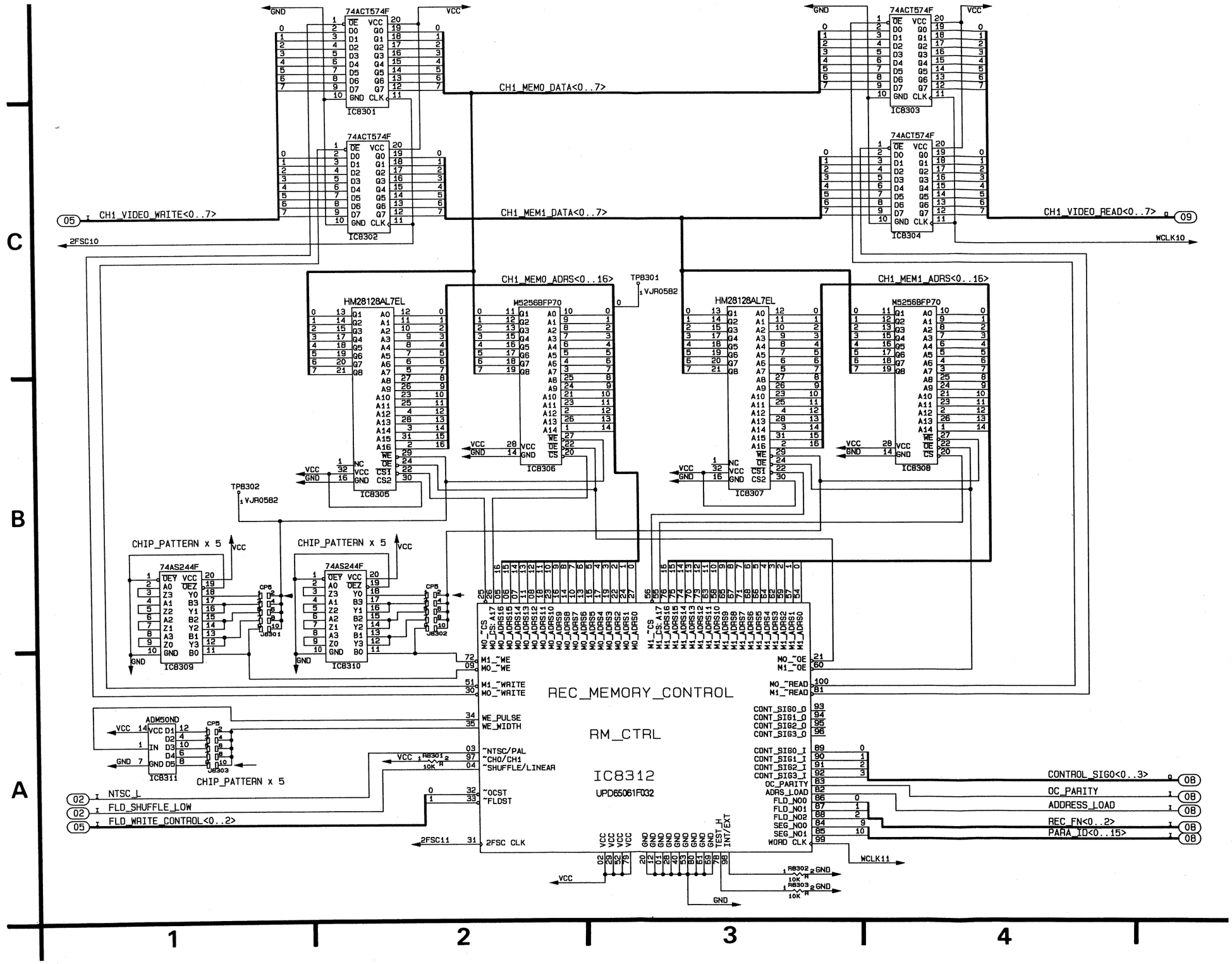

4—2—17

L2 VIDEO/AUDIO REC (CHANNEL CONTROL & ID GEN) SCHEMATIC DIAGRAM (8/19)

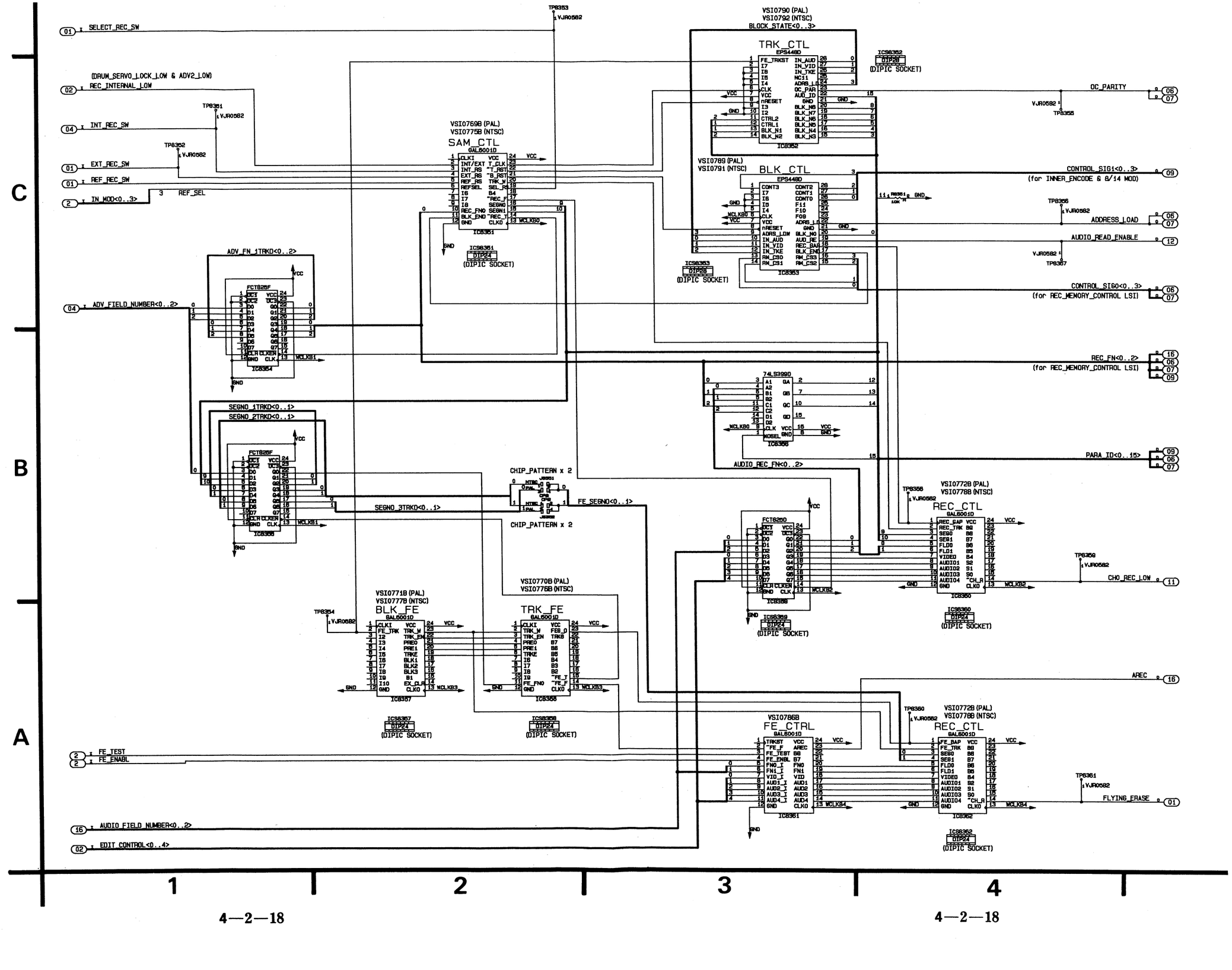

4—2—18

ORDER NO. VQS0281-4
D5

Panasonic

D-3 1/2" DIGITAL

STUDIO VTR

AJ-D350-P/E

NTSC/PAL

Operating Instructions & Service Manual

V. 5–0

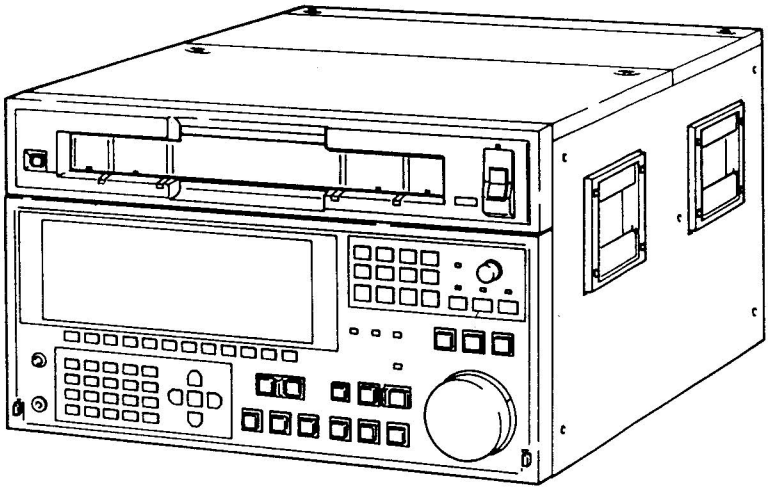

© 1995 Matsushita Electric Corporation of America.
All rights reserved. Unauthorized copying and distribution is a violation of law.

Broadcast Systems

FILE NO. VSD9106M001-5

L2 VIDEO/AUDIO REC (ID INSERT & INNER ENCODE) SCHEMATIC DIAGRAM (9/19)

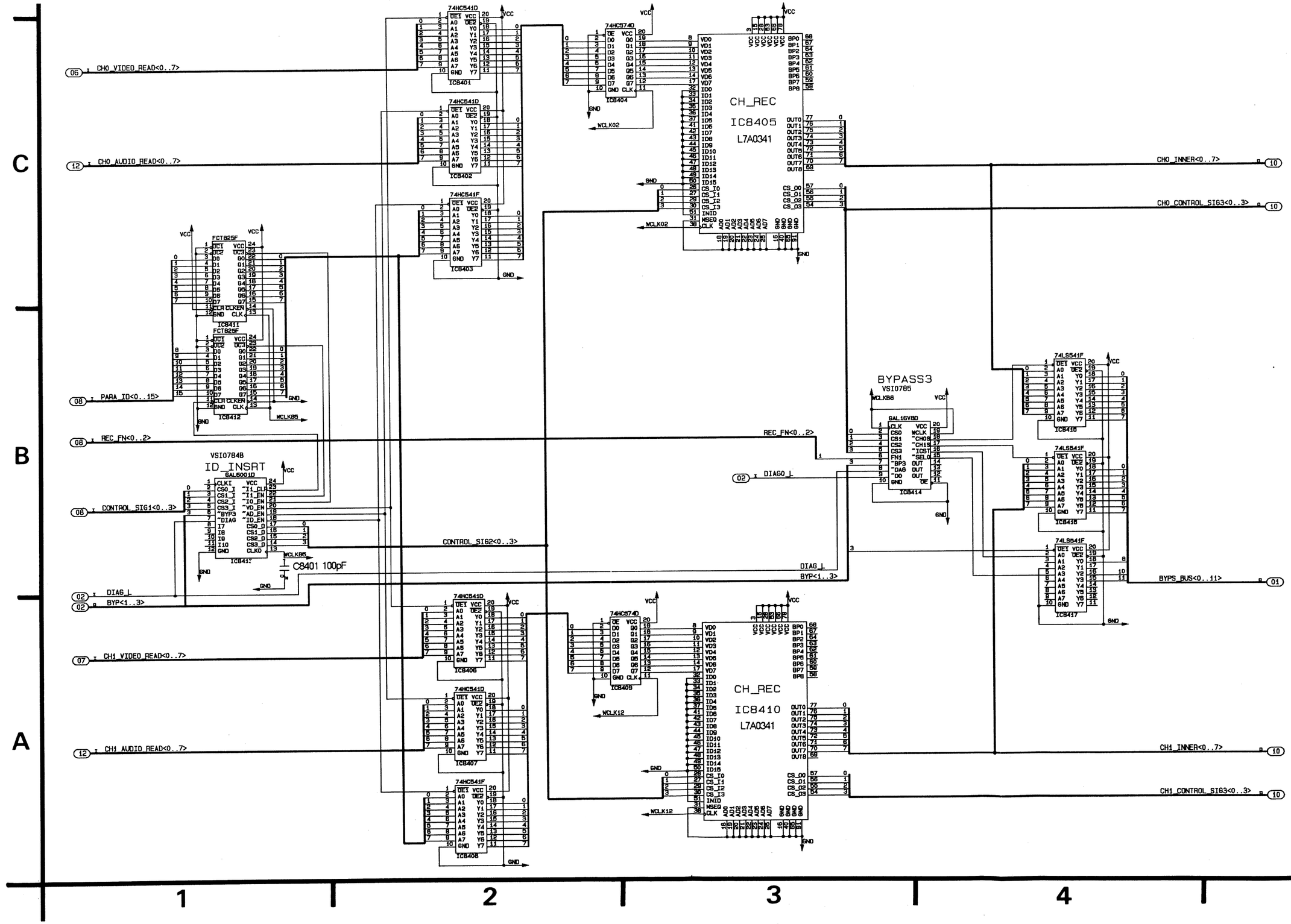

4—2—19

L2 VIDEO/AUDIO REC (8→14 MODULATOR) SCHEMATIC DIAGRAM (10/19)

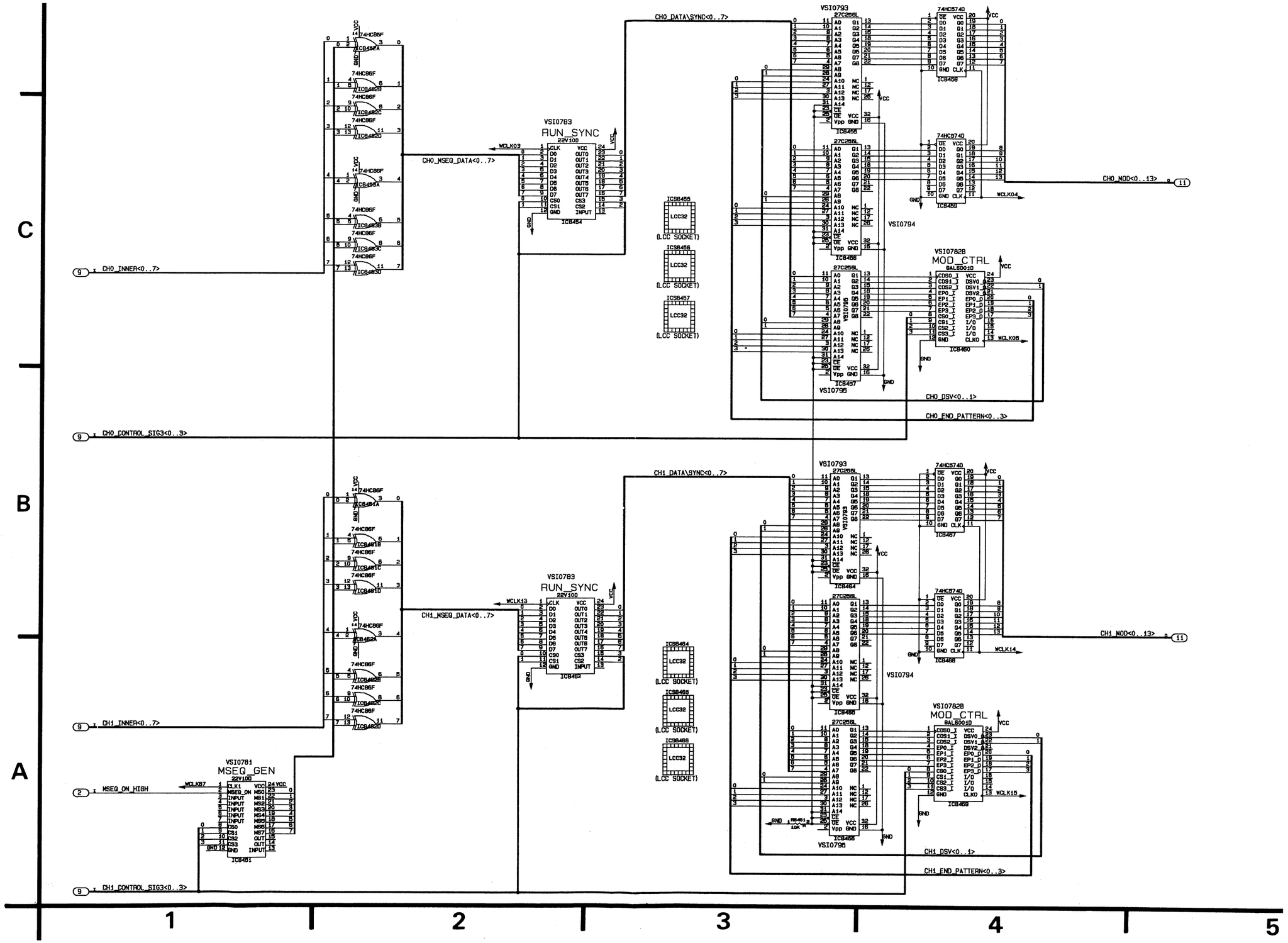

4—2—20

4—2—20

L2 VIDEO/AUDIO REC (PARALLEL TO SERIAL) SCHEMATIC DIAGRAM (11/19)

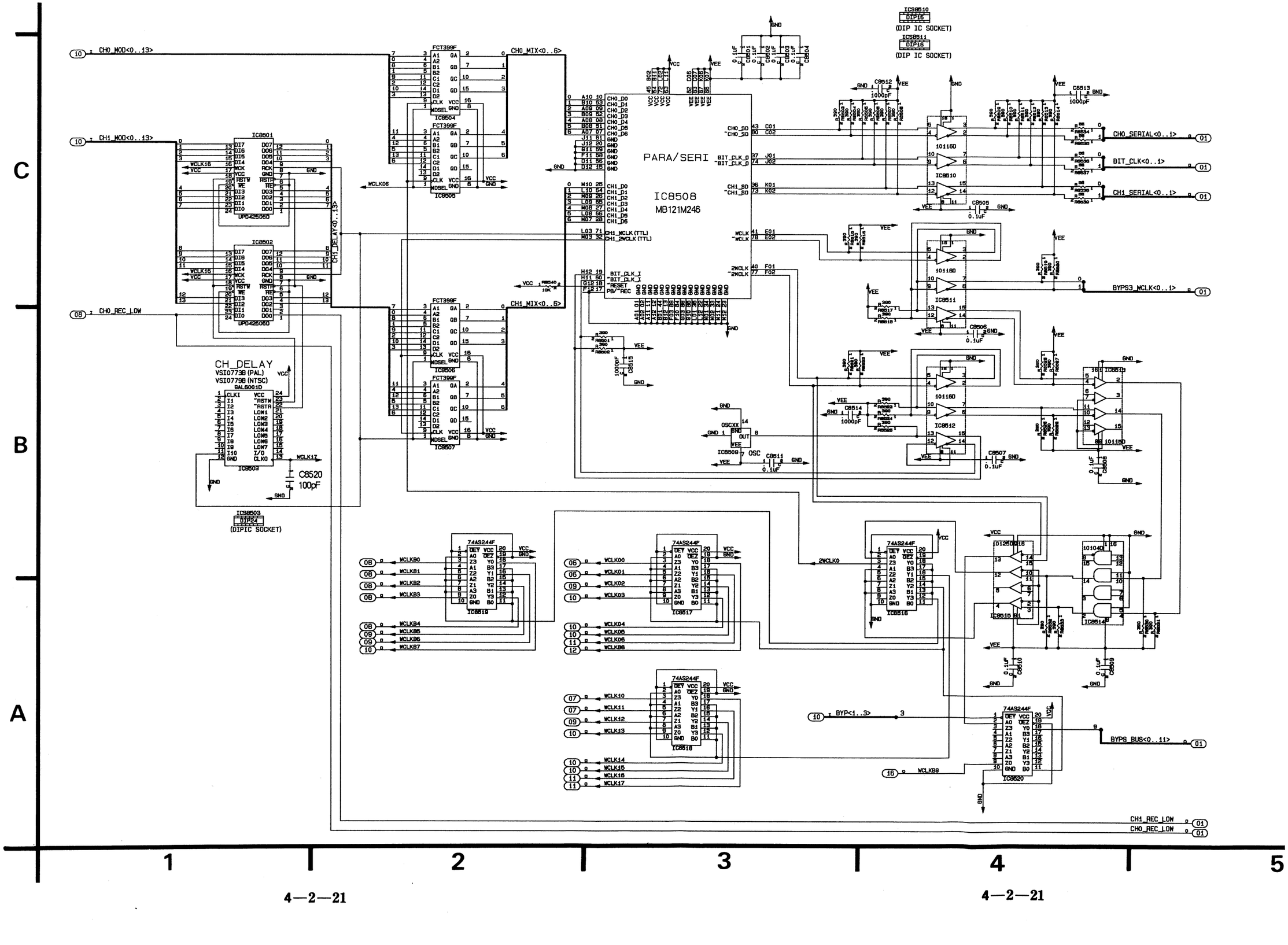

4—2—21

L2 VIDEO/AUDIO REC (AUDIO REC) SCHEMATIC DIAGRAM (12/19)

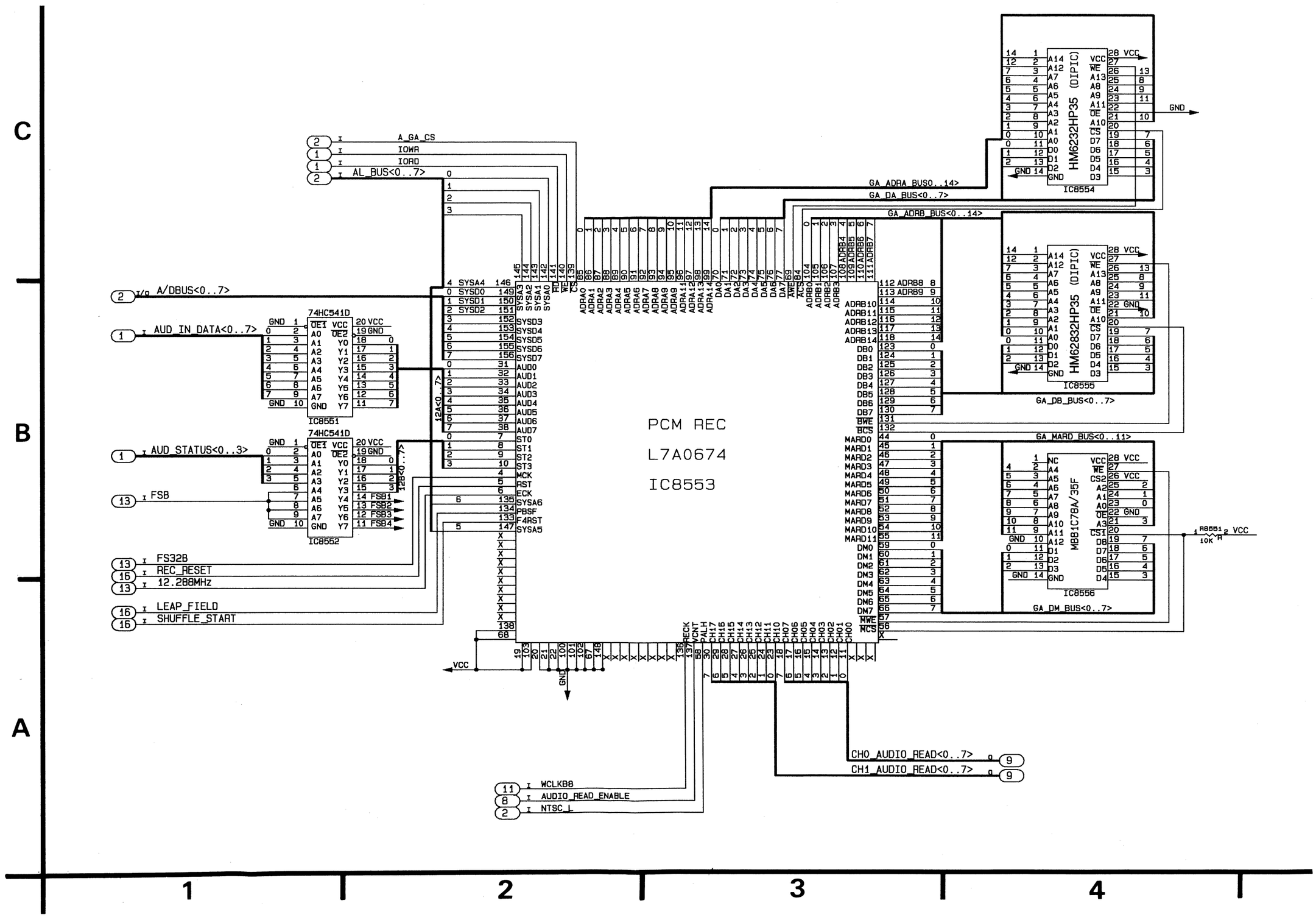

4—2—22

L2 VIDEO/AUDIO REC (PITCH CON CK) SCHEMATIC DIAGRAM (13/19)

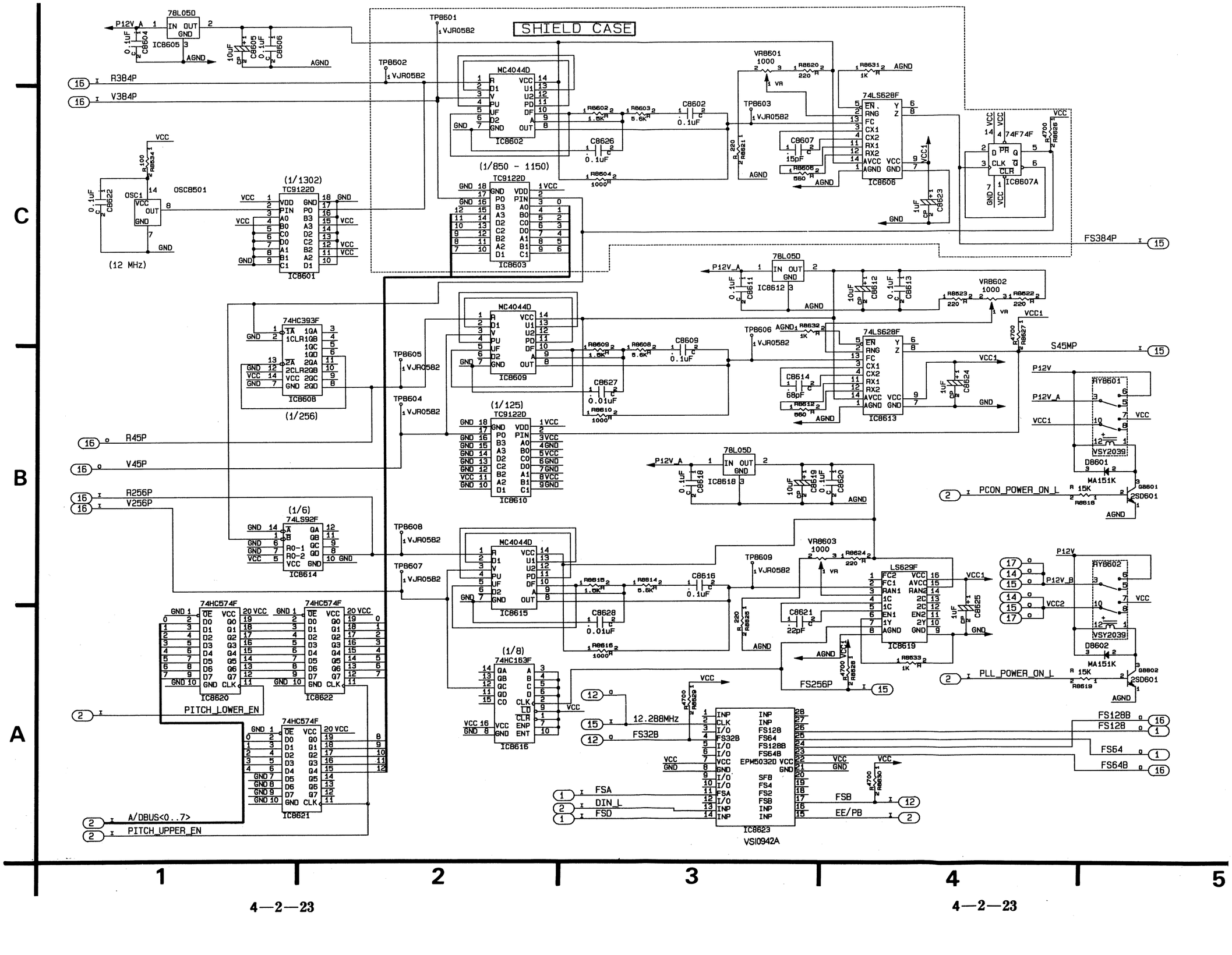

4—2—23

L2 VIDEO/AUDIO REC (AUDIO REC) SCHEMATIC DIAGRAM (14/19)

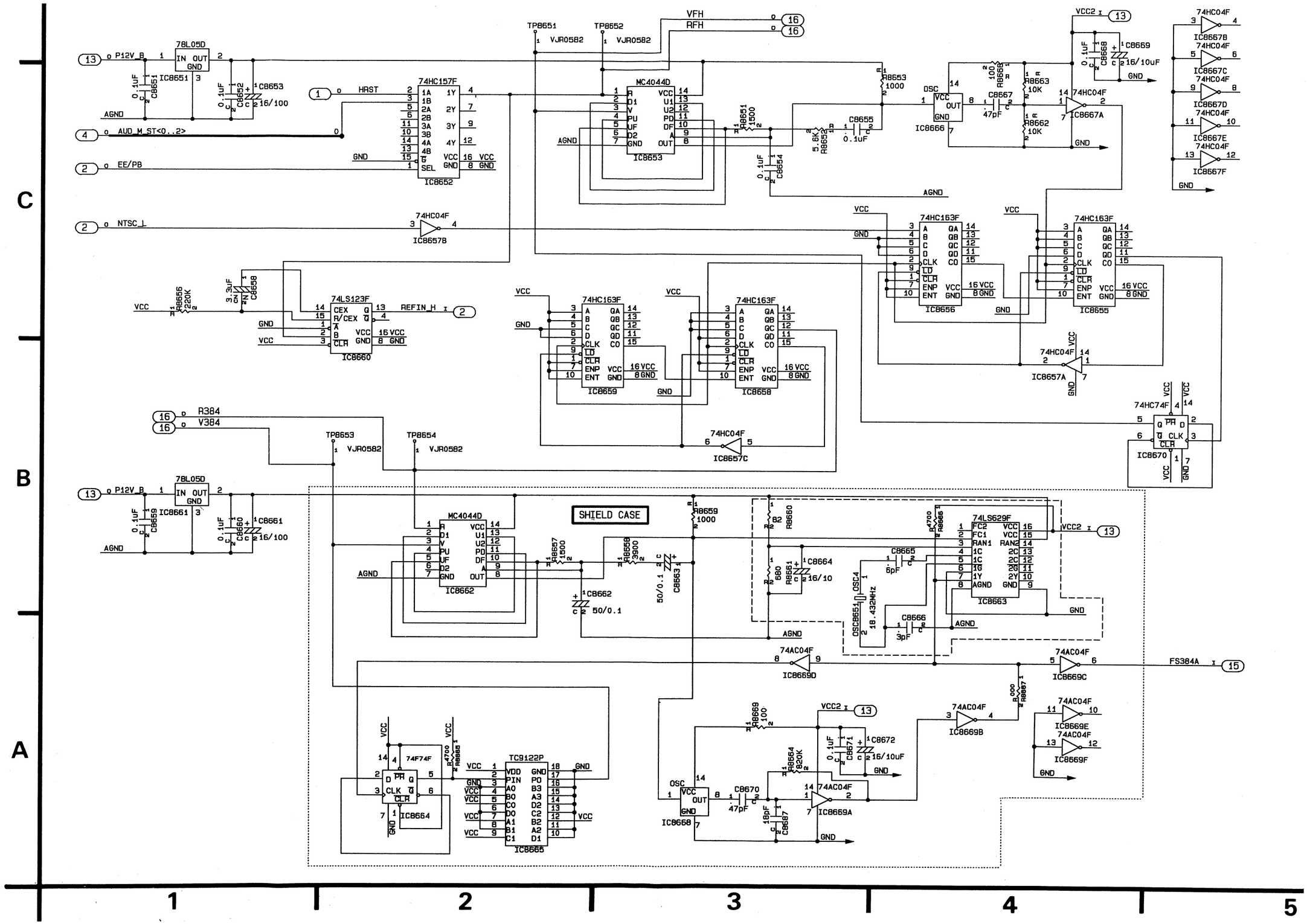

4—2—24

L2 VIDEO/AUDIO REC (AUDIO REC) SCHEMATIC DIAGRAM (15/19)

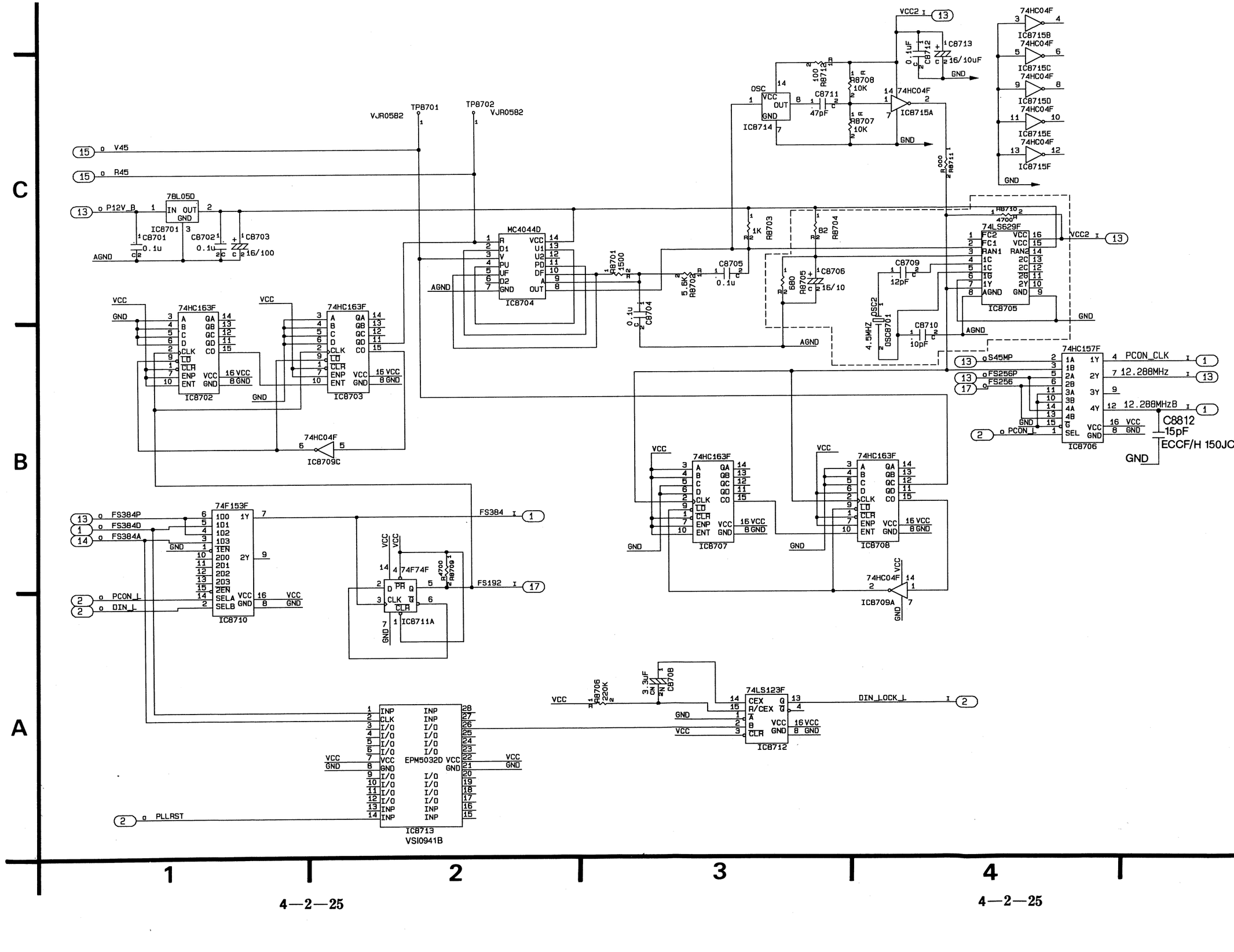

4—2—25

L2 VIDEO/AUDIO REC (RST CNT) SCHEMATIC DIAGRAM (16/19)

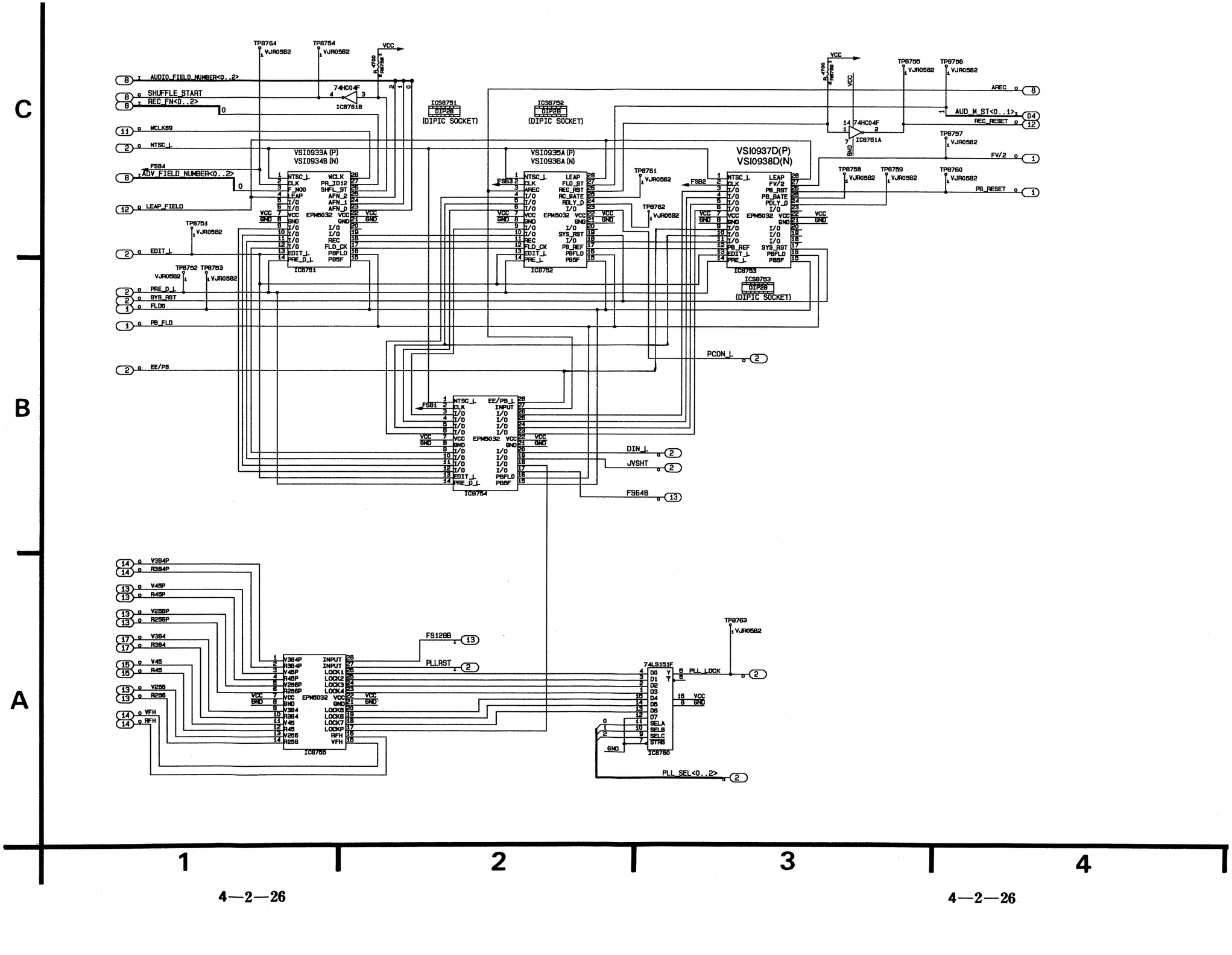

4—2—26

L2 VIDEO/AUDIO REC (AUDIO REC) SCHEMATIC DIAGRAM (17/19)

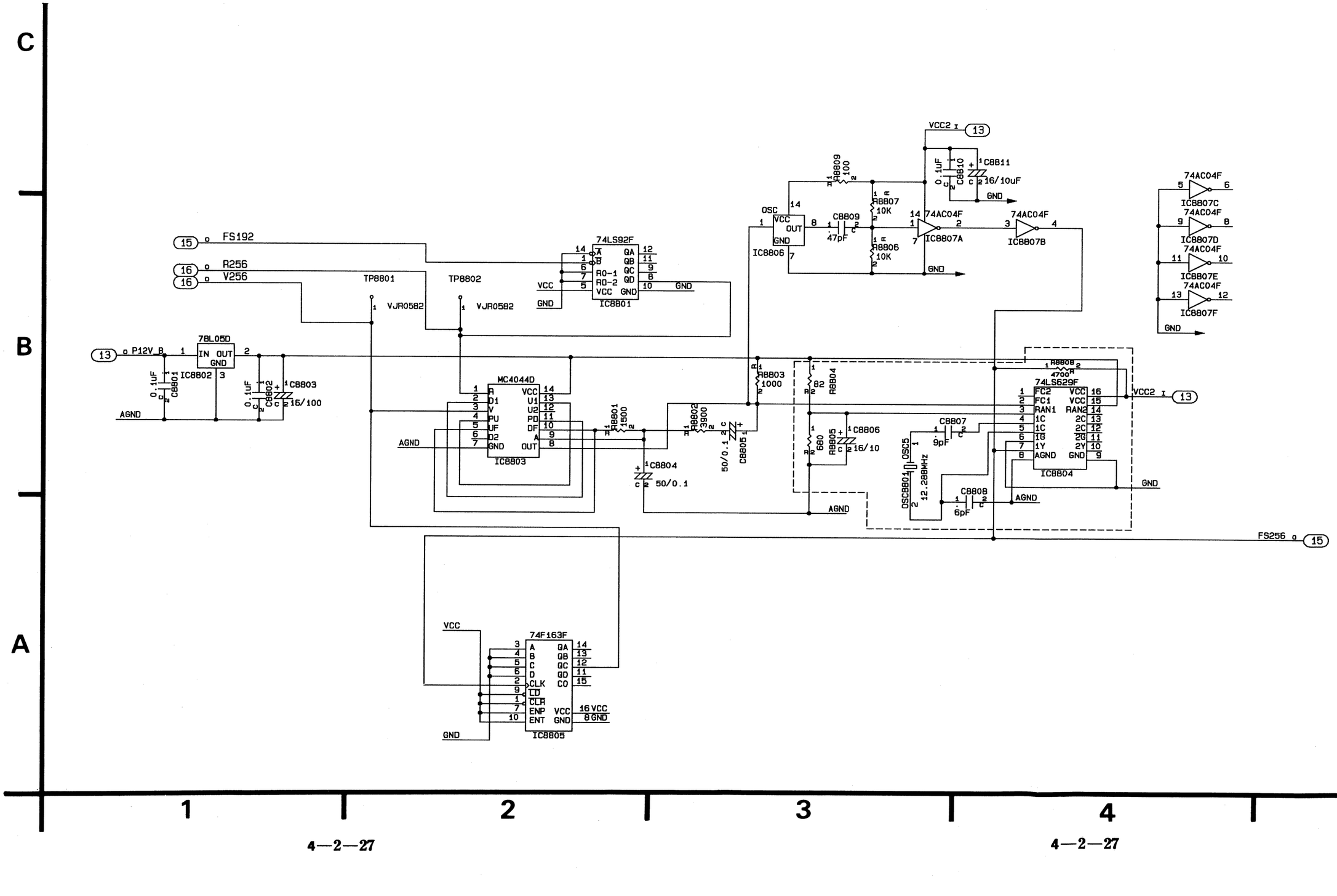

4—2—27

L2 VIDEO/AUDIO REC SUB (D SYNC SEP) SCHEMATIC DIAGRAM (18/19)

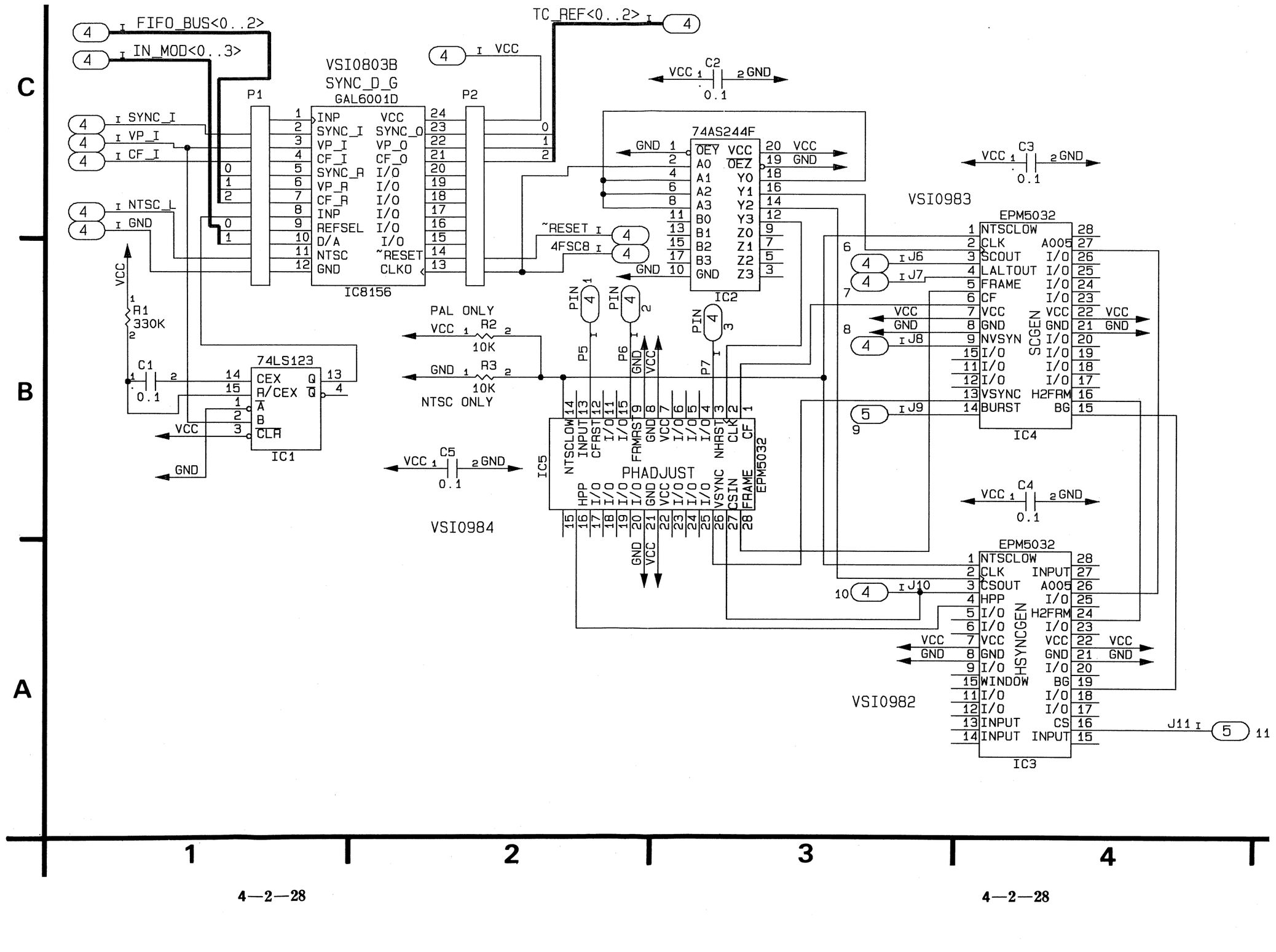

4—2—28

NTSC

L2 WAVEFORMS NTSC

TP8154 E-E2
2V/20msec. div.

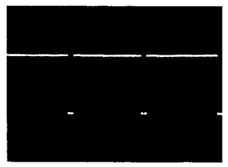
TP8162 E-E2
2V/20µsec. div.

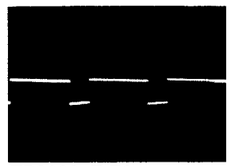
TP8206 E-E2
5V/20msec. div.

TP8351 E-E2
2V/5msec. div.

TP8155 E-E2
2V/10msec. div.

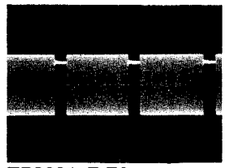
TP8201 E-E2
2V/20µsec. div.

TP8207 E-E2
2V/5µsec. div.

TP8352 E-E2
2V/5msec. div.

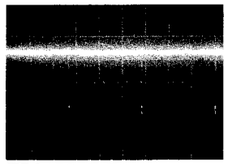
TP8156 E-E2
2V/20µsec. div.

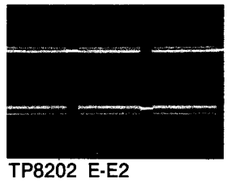
TP8202 E-E2
2V/20µsec. div.

TP8251 E-E2
2V/5µsec. div.

TP8353 E-E2
2V/5msec. div.

TP8159 E-E2
2V/20msec. div.

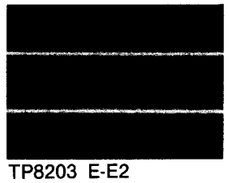
TP8203 E-E2
2V/20µsec. div.

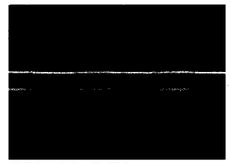
TP8252 E-E2
5V/10msec. div.

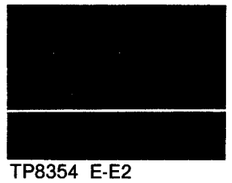
TP8354 E-E2
2V/2msec. div.

TP8160 E-E2
2V/5msec. div.

TP8204 E-E2
2V/10µsec. div.

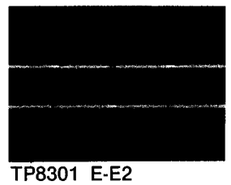
TP8301 E-E2
2V/5µsec. div.

TP8355 E-E2
2V/2msec. div.

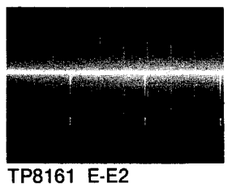
TP8161 E-E2
2V/20µsec. div.

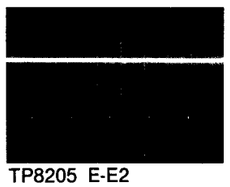
TP8205 E-E2
2V/10msec. div.

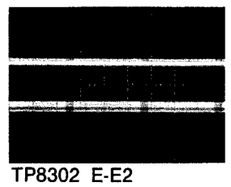
TP8302 E-E2
2V/20µsec. div.

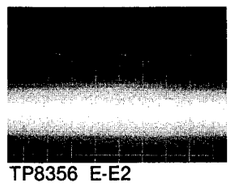
TP8356 E-E2
2V/2msec. div.

L2 WAVEFORMS NTSC

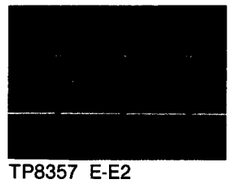
TP8357 E-E2
2V/2msec. div.

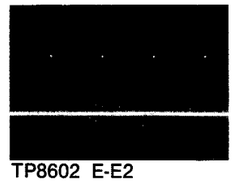
TP8602 E-E2
2V/50µsec. div.

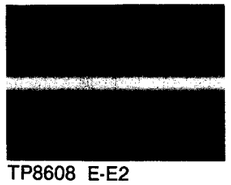
TP8608 E-E2
100mV/10µsec. div.

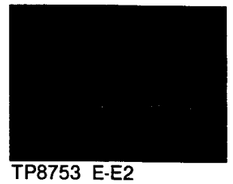
TP8753 E-E2
2V/20msec. div.

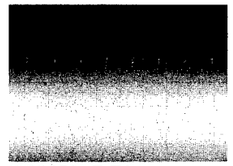
TP8358 E-E2
2V/5msec. div.

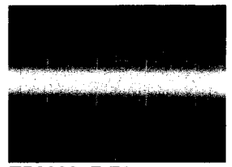
TP8603 E-E2
100mV/10µsec. div.

TP8609 E-E2
100mV/20µsec. div.

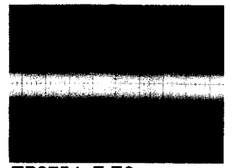
TP8754 E-E2
(TP8755)
50mV/20µsec. div.

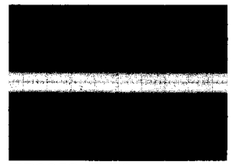
TP8359 E-E2
200mV/20µsec. div.

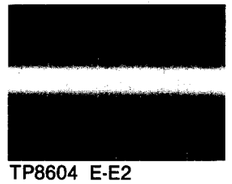
TP8604 E-E2
50mV/10µsec. div.

TP8651 E-E2
(TP8652)
2V/20µsec. div.

TP8756 E-E2
2V/5msec. div.

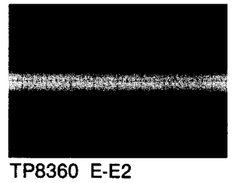
TP8360 E-E2
50mV/20µsec. div.

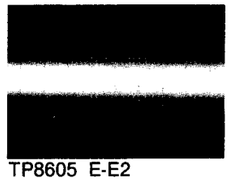
TP8605 E-E2
50mV/10µsec. div.

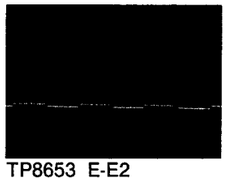
TP8653 E-E2
2V/10µsec. div.

TP8757 E-E2
2V/10msec. div.

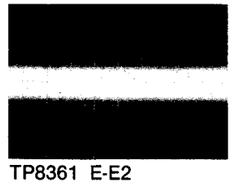
TP8361 E-E2
100mV/200µsec. div.

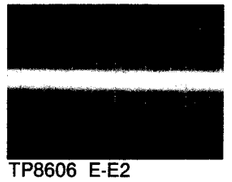
TP8606 E-E2
100mV/10µsec. div.

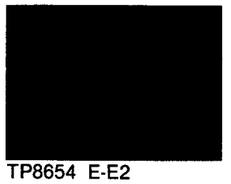
TP8654 E-E2
(TP8701, TP8702)
2V/10µsec. div.

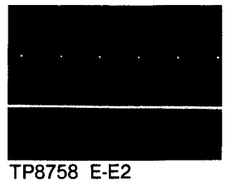
TP8758 E-E2
2V/10msec. div.

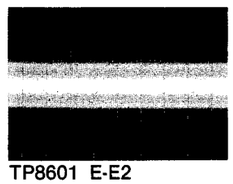
TP8601 E-E2
100mV/20µsec. div.

TP8607 E-E2
100mV/10µsec. div.

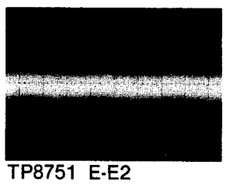
TP8751 E-E2
(TP8752)
50mV/20µsec. div.

TP8759 E-E2
2V/10msec. div.

L2 WAVEFORMS NTSC

TP8357 E-E2
2V/2msec. div.

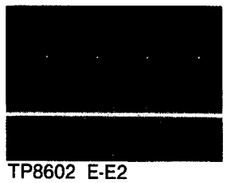

TP8602 E-E2
2V/50µsec. div.

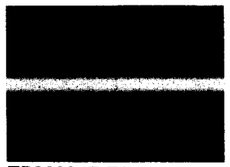

TP8608 E-E2
100mV/10µsec. div.

TP8753 E-E2
2V/20msec. div.

TP8760 E-E2
200mV/10msec. div.

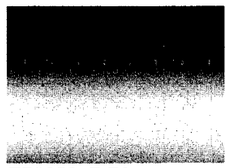

TP8358 E-E2
2V/5msec. div.

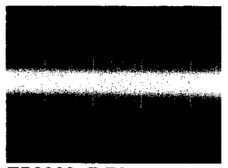

TP8603 E-E2
100mV/10µsec. div.

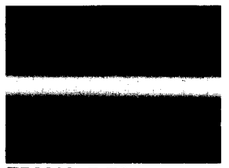

TP8609 E-E2
100mV/20µsec. div.

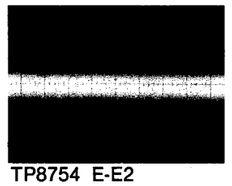

TP8754 E-E2
(TP8755)
50mV/20µsec. div.

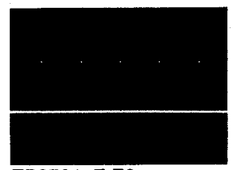

TP8761 E-E2
2V/10msec. div.

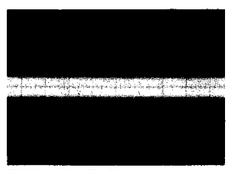

TP8359 E-E2
200mV/20µsec. div.

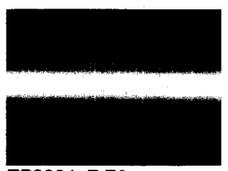

TP8604 E-E2
50mV/10µsec. div.

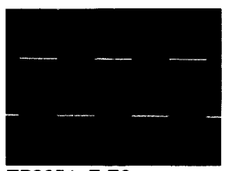

TP8651 E-E2
(TP8652)
2V/20µsec. div.

TP8756 E-E2
2V/5msec. div.

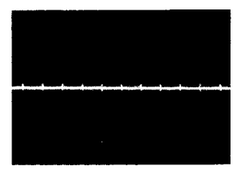

TP8762 E-E2
2V/20msec. div.

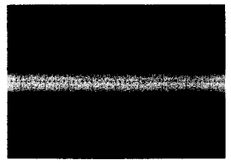

TP8360 E-E2
50mV/20µsec. div.

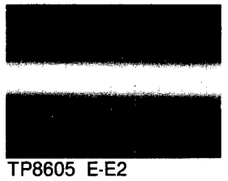

TP8605 E-E2
50mV/10µsec. div.

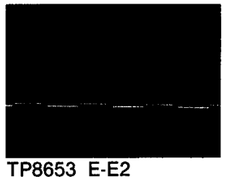

TP8653 E-E2
2V/10µsec. div.

TP8757 E-E2
2V/10msec. div.

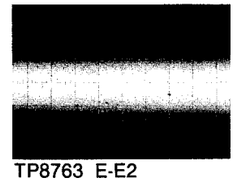

TP8763 E-E2
20mV/20µsec. div.

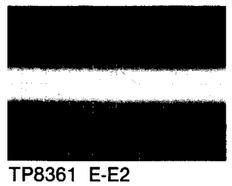

TP8361 E-E2
100mV/200µsec. div.

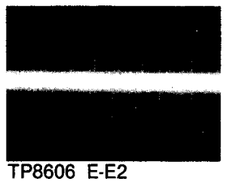

TP8606 E-E2
100mV/10µsec. div.

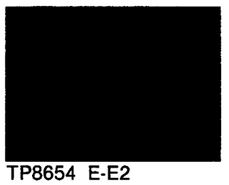

TP8654 E-E2
(TP8701, TP8702)
2V/10µsec. div.

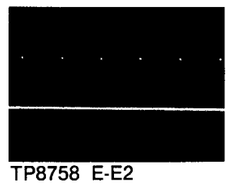

TP8758 E-E2
2V/10msec. div.

TP8764 E-E2
2V/10µsec. div.

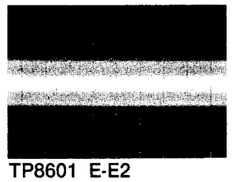

TP8601 E-E2
100mV/20µsec. div.

TP8607 E-E2
100mV/10µsec. div.

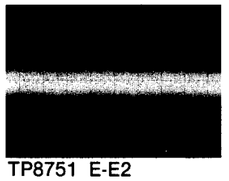

TP8751 E-E2
(TP8752)
50mV/20µsec. div.

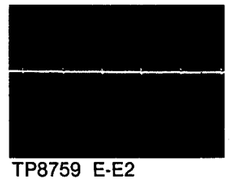

TP8759 E-E2
2V/10msec. div.

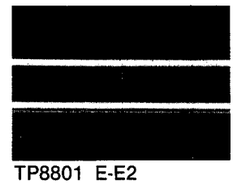

TP8801 E-E2
(TP8802)
2V/20µsec. div.

PAL

L2 WAVEFORMS PAL

TP8154 E-E2
2V/20msec. div.

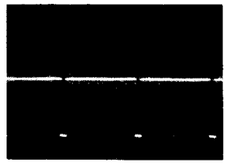
TP8162 E-E2
2V/20µsec. div.

TP8206 E-E2
2V/20msec. div.

TP8353 E-E2
(TP8354)
2V/2msec. div.

TP8155 E-E2
2V/10msec. div.

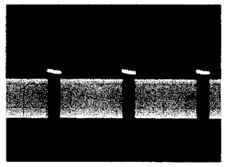
TP8201 E-E2
2V/20µsec. div.

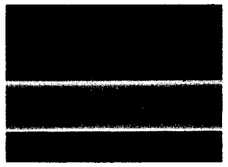
TP8207 E-E2
2V/20µsec. div.

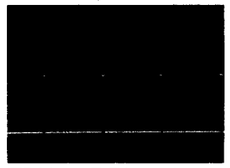
TP8355 E-E2
2V/2msec. div.

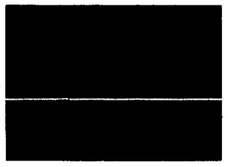
TP8156 E-E2
1V/20µsec. div.

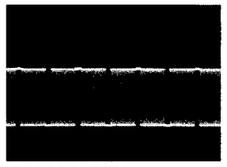
TP8202 E-E2
2V/50µsec. div.

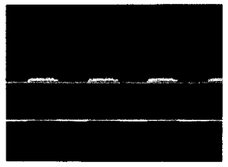
TP8251 E-E2
(TP8301)
2V/50µsec. div.

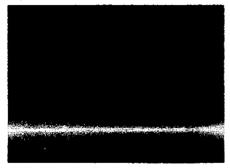
TP8356 E-E2
2V/2msec. div.

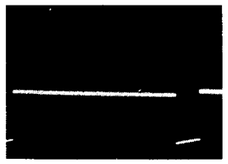
TP8159 E-E2
2V/20msec. div.

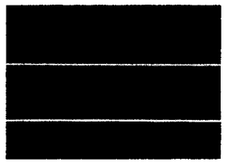
TP8203 E-E2
2V/50µsec. div.

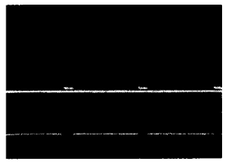
TP8252 E-E2
(TP8302)
2V/20µsec. div.

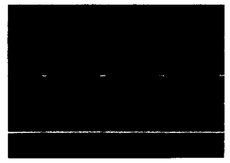
TP8357 E-E2
2V/2msec. div.

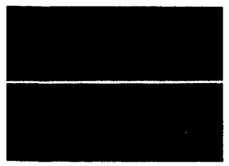
TP8160 E-E2
2V/10msec. div.

TP8204 E-E2
2V/20µsec. div.

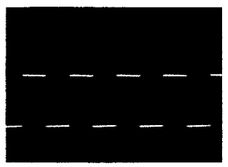
TP8351 E-E2
(TP8353)
2V/5msec. div.

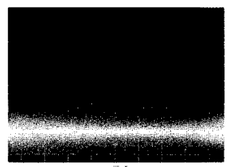
TP8358 E-E2
2V/2msec. div.

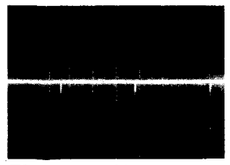
TP8161 E-E2
2V/20µsec. div.

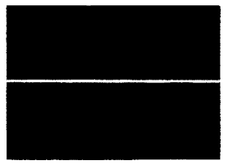
TP8205 E-E2
2V/10msec. div.

TP8352 E-E2
2V/5msec. div.

TP8359 E-E2
200mV/20µsec. div.

L2 WAVEFORMS PAL

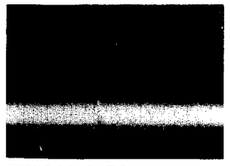
TP8360 E-E2
20mV/20µsec. div.

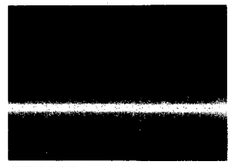
TP8605 E-E2
20mV/10µsec. div.

TP8653 E-E2
2V/20µsec. div.

TP8757 E-E2
2V/10msec. div.

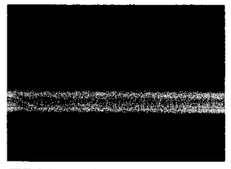
TP8361 E-E2
100mV/200µsec. div.

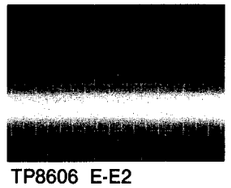
TP8606 E-E2
50mV/20µsec. div.

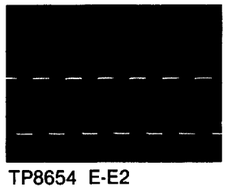
TP8654 E-E2
(TP8701, TP8702)
2V/20µsec. div.

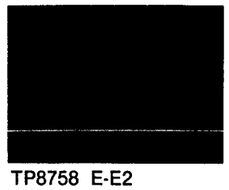
TP8758 E-E2
2V/10msec. div.

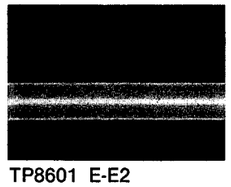
TP8601 E-E2
100mV/20µsec. div.

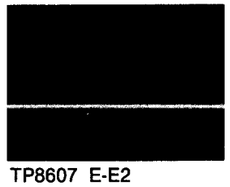
TP8607 E-E2
(TP8608)
20mV/20µsec. div.

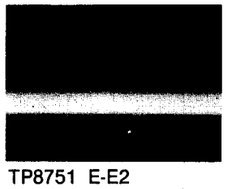
TP8751 E-E2
(TP8752)
50mV/20µsec. div.

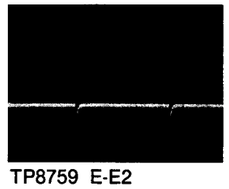
TP8759 E-E2
200mV/5msec. div.

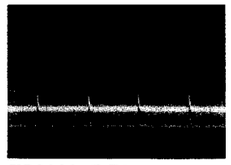
TP8602 E-E2
20mV/50µsec. div.

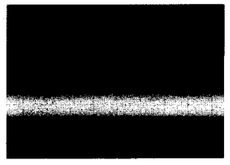
TP8609 E-E2
50mV/20µsec. div.

TP8753 E-E2
200mV/10µsec. div.

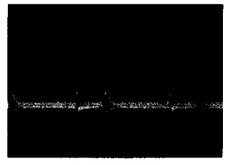
TP8760 E-E2
200mV/5msec. div.

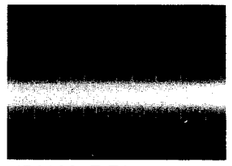
TP8603 E-E2
50mV/20µsec. div.

TP8651 E-E2
2V/20µsec. div.

TP8754 E-E2
(TP8755)
50mV/5msec. div.

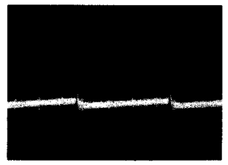
TP8761 E-E2
20mV/5msec. div.

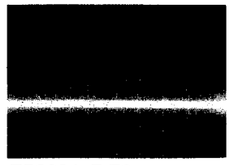
TP8604 E-E2
50mV/50µsec. div.

TP8652 E-E2
2V/20µsec. div.

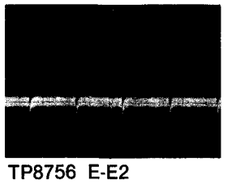
TP8756 E-E2
200mV/10msec. div.

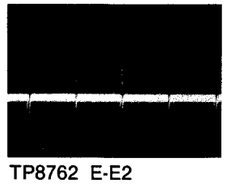
TP8762 E-E2
200mV/10msec. div.

2 WAVEFORMS PAL

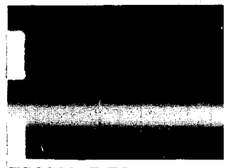

TP8360 E-E2
20mV/20µsec. div.

TP8605 E-E2
20mV/10µsec. div.

TP8653 E-E2
2V/20µsec. div.

TP8757 E-E2
2V/10msec. div.

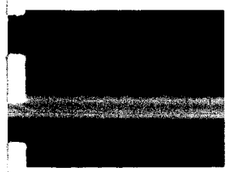

P8361 E-E2
100mV/200µsec. div.

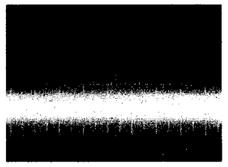

TP8606 E-E2
50mV/20µsec. div.

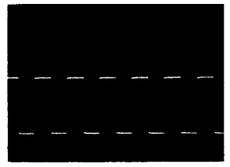

TP8654 E-E2
(TP8701, TP8702)
2V/20µsec. div.

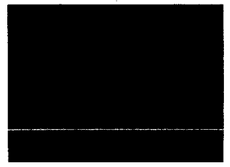

TP8758 E-E2
2V/10msec. div.

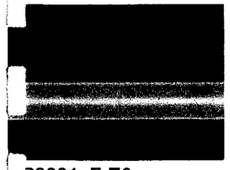

P8601 E-E2
.0mV/20µsec. div.

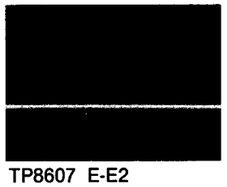

TP8607 E-E2
(TP8608)
20mV/20µsec. div.

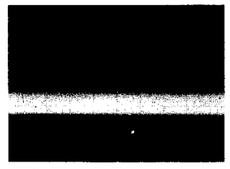

TP8751 E-E2
(TP8752)
50mV/20µsec. div.

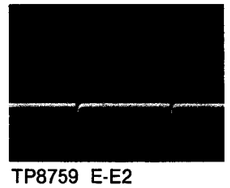

TP8759 E-E2
200mV/5msec. div.

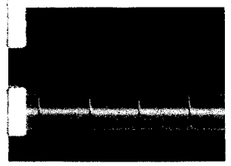

P8602 E-E2
)mV/50µsec. div.

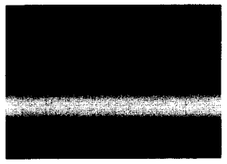

TP8609 E-E2
50mV/20µsec. div.

TP8753 E-E2
200mV/10µsec. div.

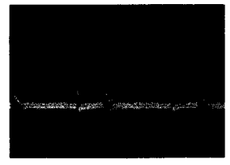

TP8760 E-E2
200mV/5msec. div.

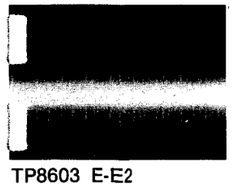

TP8603 E-E2
)mV/20µsec. div.

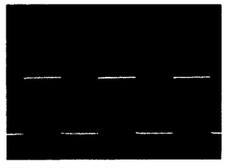

TP8651 E-E2
2V/20µsec. div.

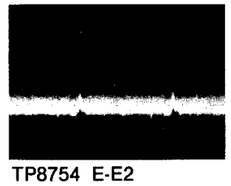

TP8754 E-E2
(TP8755)
50mV/5msec. div.

TP8761 E-E2
20mV/5msec. div.

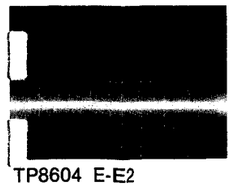

TP8604 E-E2
50mV/50µsec. div.

TP8652 E-E2
2V/20µsec. div.

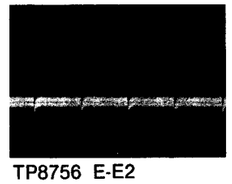

TP8756 E-E2
200mV/10msec. div.

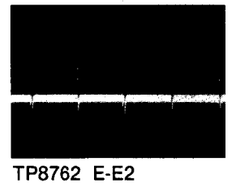

TP8762 E-E2
200mV/10msec. div.

L2 WAVEFORMS PAL

TP8763 E-E2
20mV/20µsec. div.

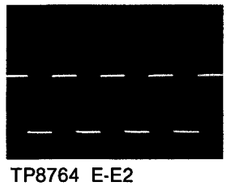

TP8764 E-E2
2V/10µsec. div.

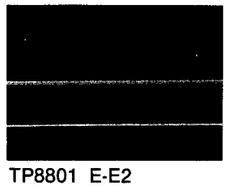

TP8801 E-E2
(TP8802)
2V/20µsec. div.

L2 VIDEO/AUDIO REC (PASS CON) SCHEMATIC DIAGRAM (19/19)

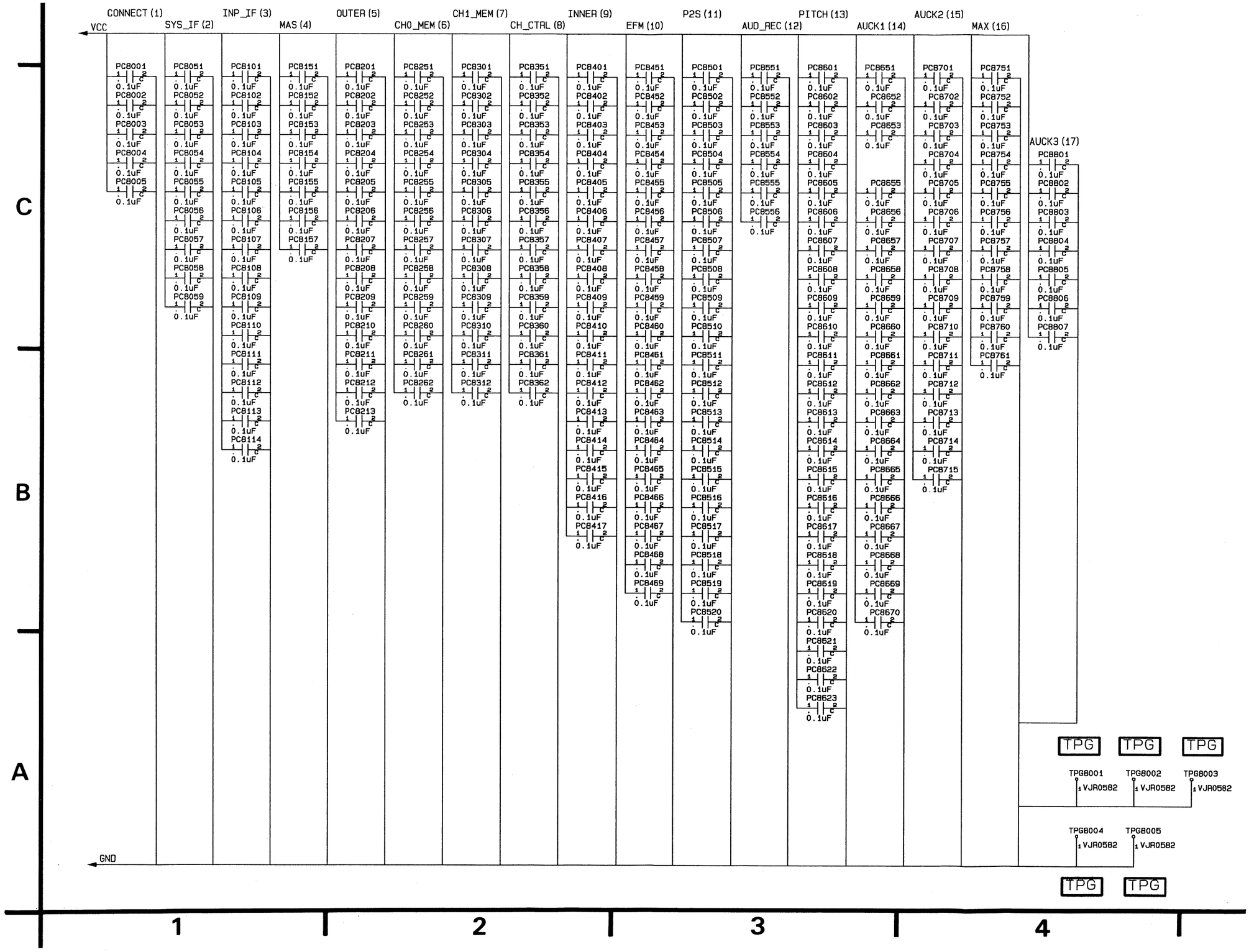

4—2—29

L3 VIDEO/AUDIO PB SCHEMATIC DIAGRAM (1/25)

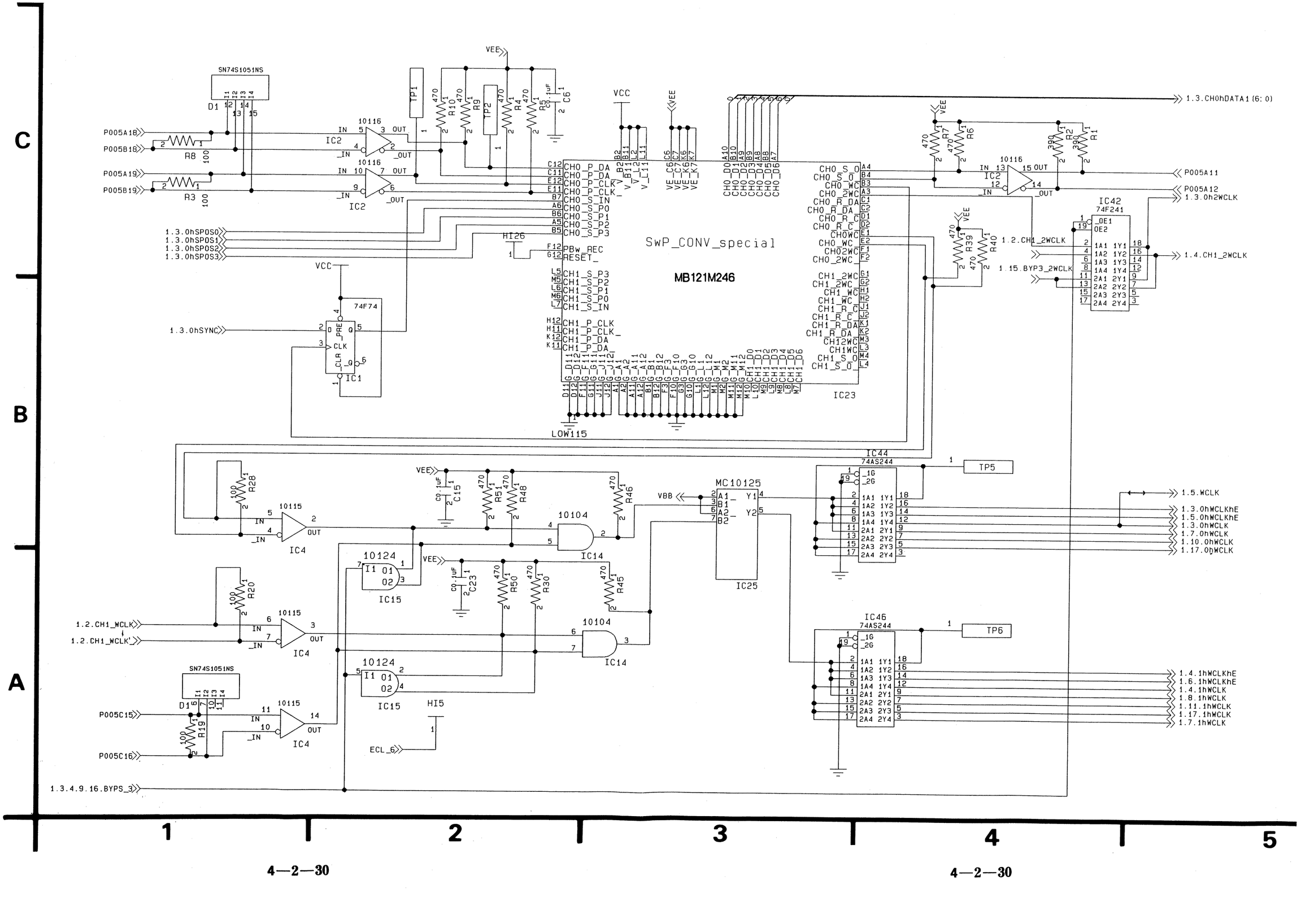

C

B

A

1 2 3 4 5

4—2—30

4—2—30

L3 VIDEO/AUDIO PB SCHEMATIC DIAGRAM (2/25)

COMPARISON CHART BETWEEN
NTSC MODEL AND PAL MODEL
L3 VIDEO/AUDIO P.C.B.

REF. NO.	NTSC	PAL
IC8035	VSI1005A	VSI0921B
IC8057	VSI0873	VSI0872
IC8059	VSI0870	VSI0870
IC8068	VSI0873	VSI0872
IC8076	VSI0859E	VSI0858E
IC8077	VSI0932D	VSI0931D
IC8094	VSI0859E	VSI0858E
IC8125	VSI0861C	VSI0860C
IC8128	VSI0865B	VSI0864B
IC8129	VSI0867B	VSI0866B
IC8130	VSI0863B	VSI0862B
IC8132	VSI0875	VSI0874
	VEP88070C	**VEP88070D**

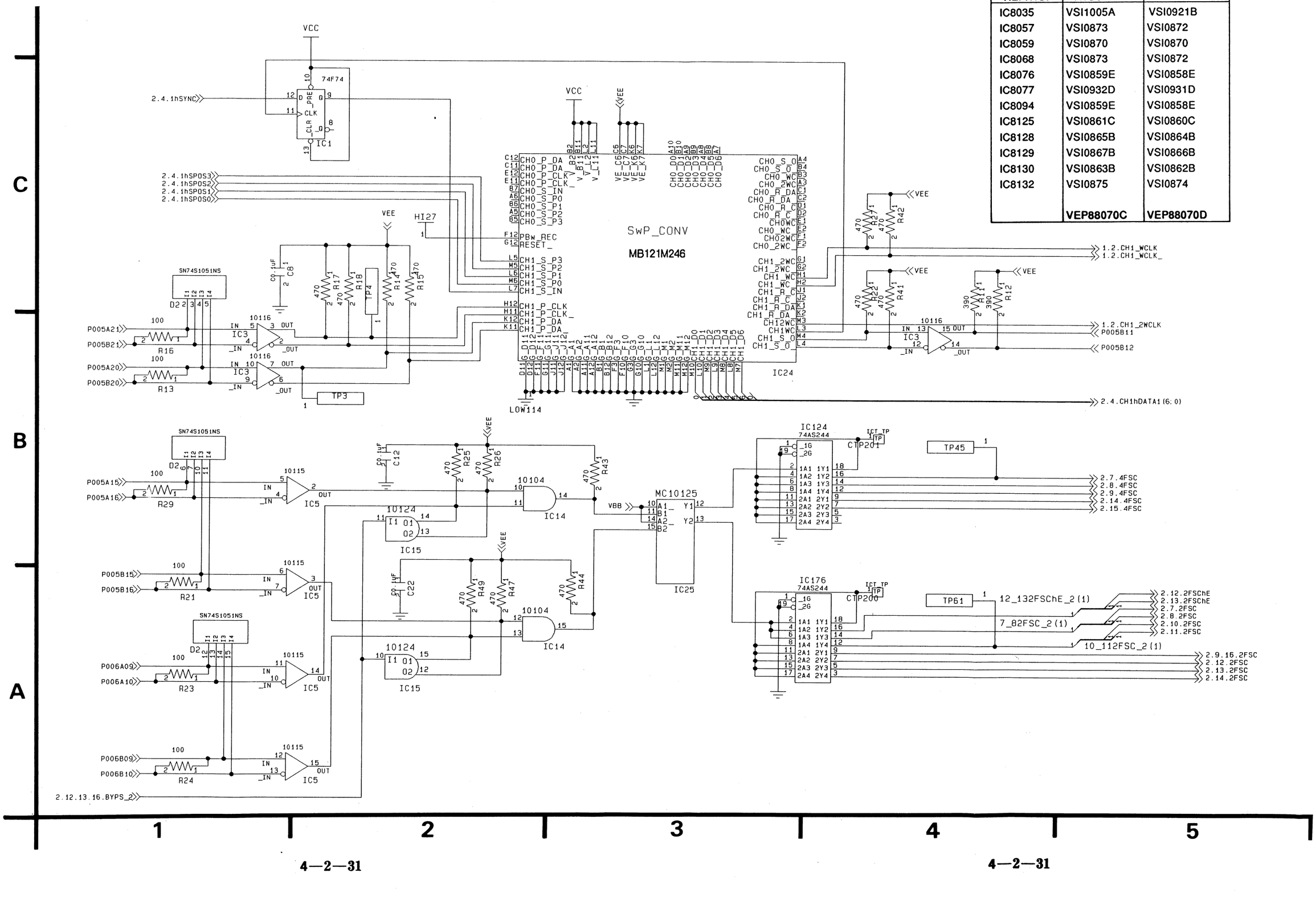

4—2—31

L3 VIDEO/AUDIO PB SCHEMATIC DIAGRAM (3/25)

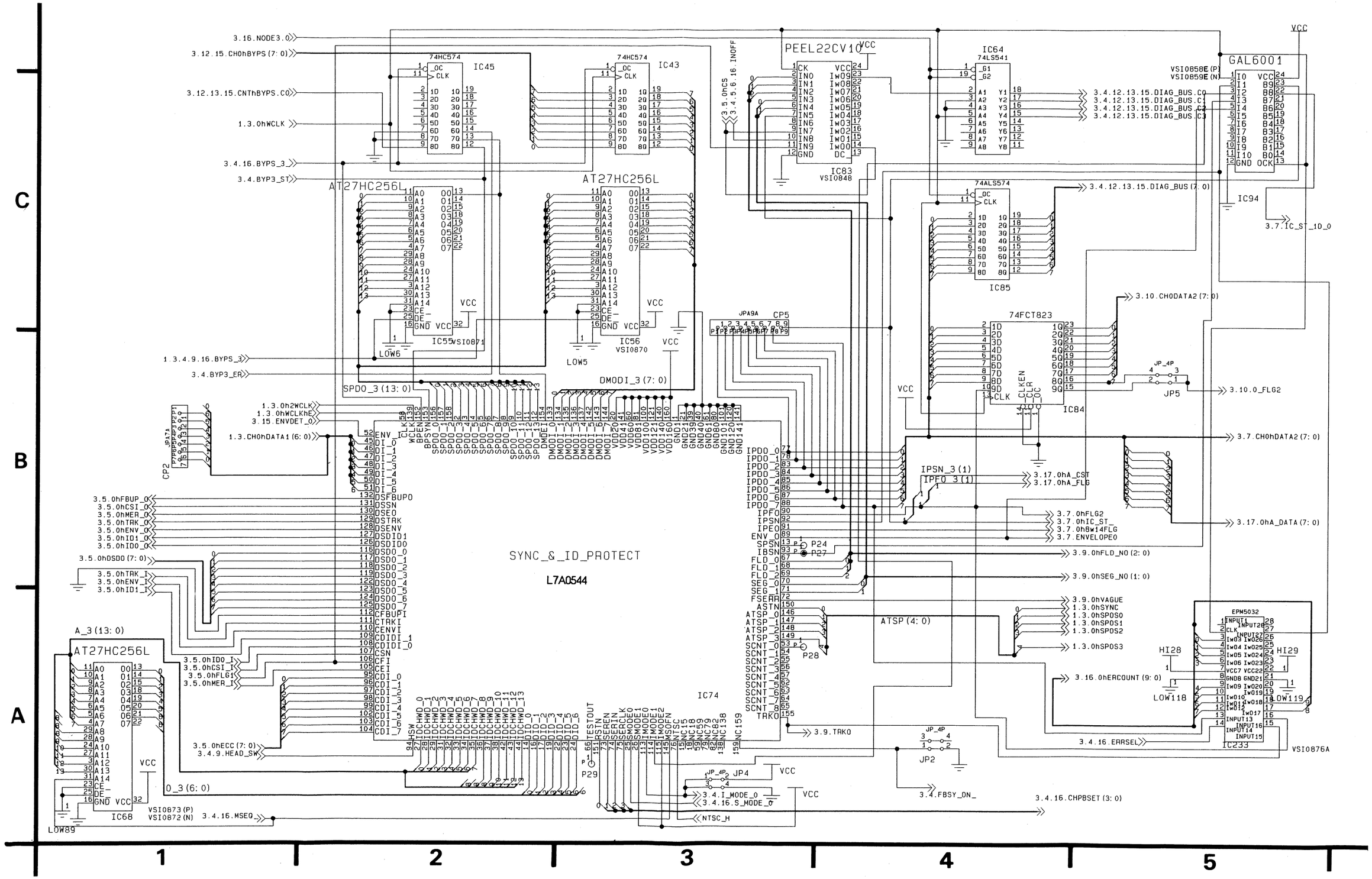

4—2—32

L3 VIDEO/AUDIO PB SCHEMATIC DIAGRAM (4/25)

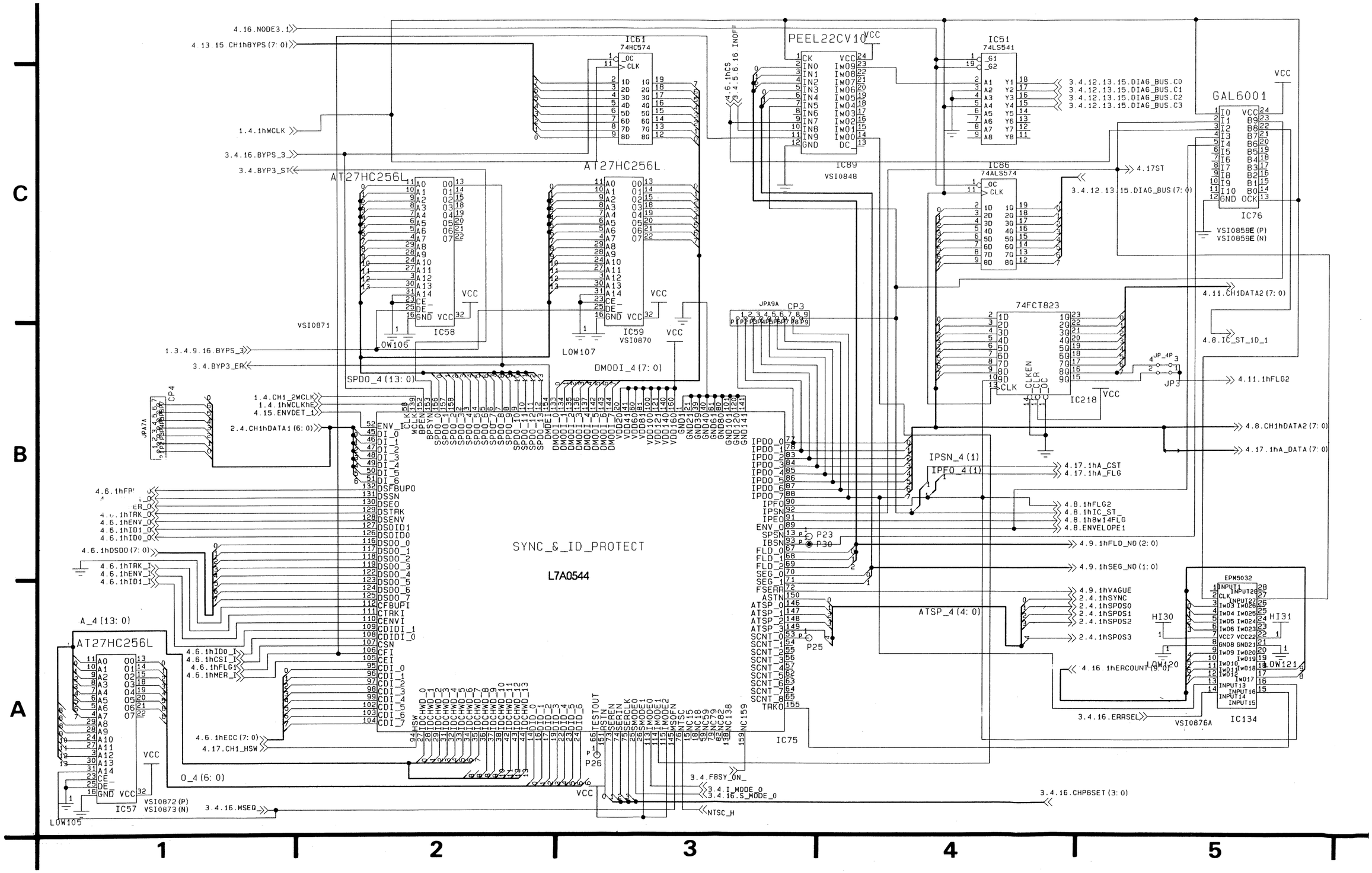

4—2—33

L3 VIDEO/AUDIO PB SCHEMATIC DIAGRAM (5/25)

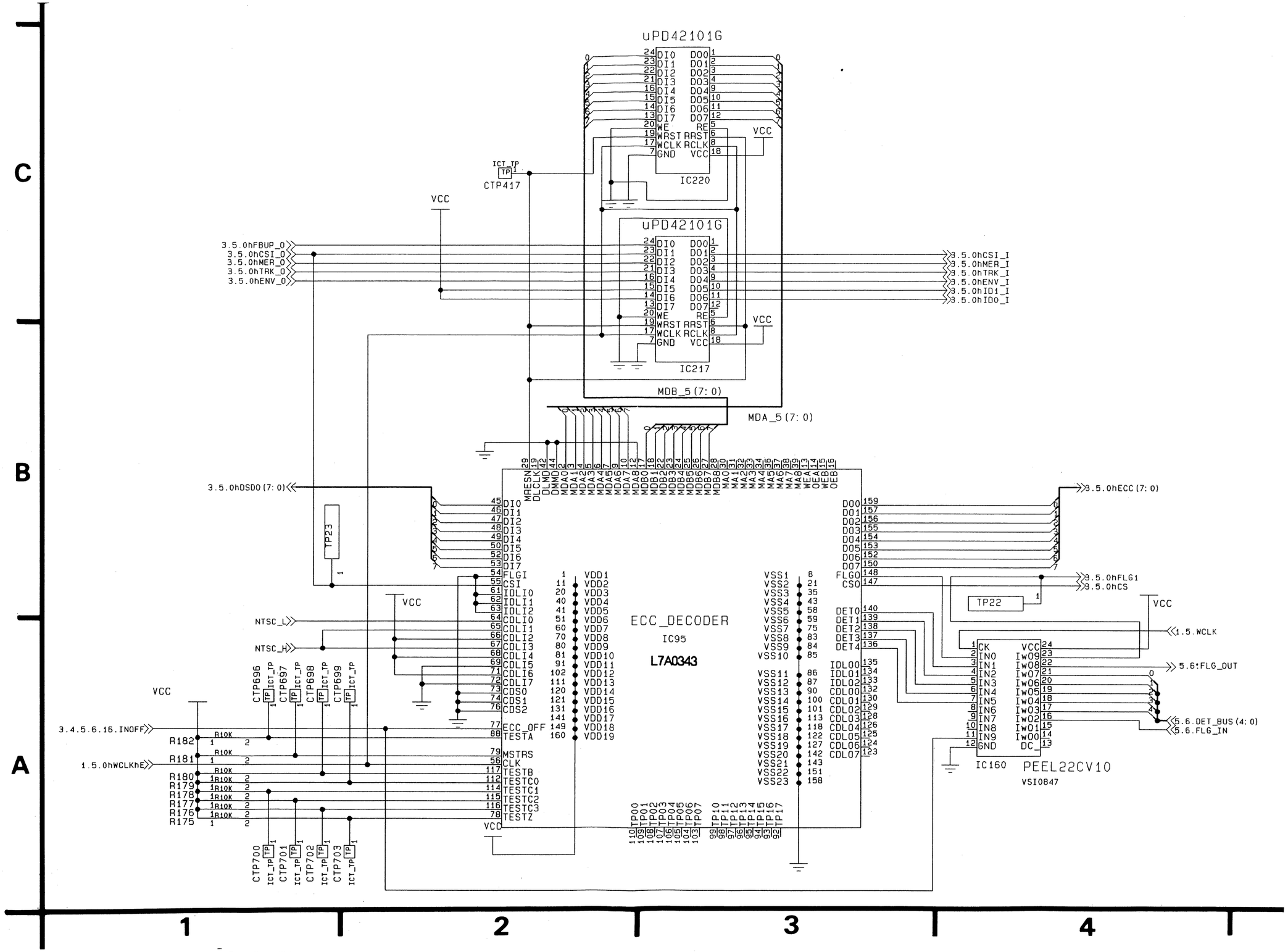

4—2—34

L3 VIDEO/AUDIO PB SCHEMATIC DIAGRAM (6/25)

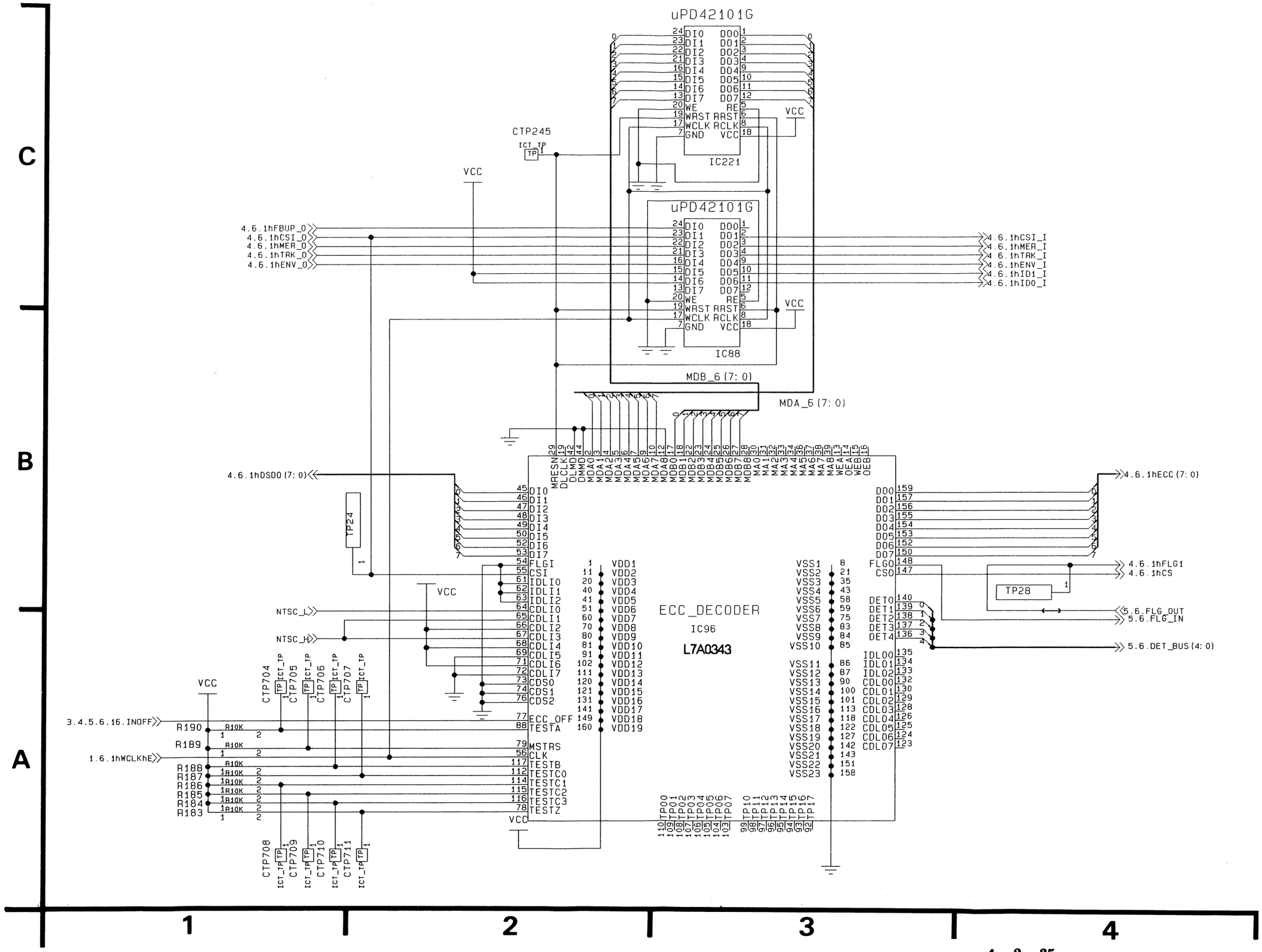

4—2—35

L3 VIDEO/AUDIO PB SCHEMATIC DIAGRAM (7/25)

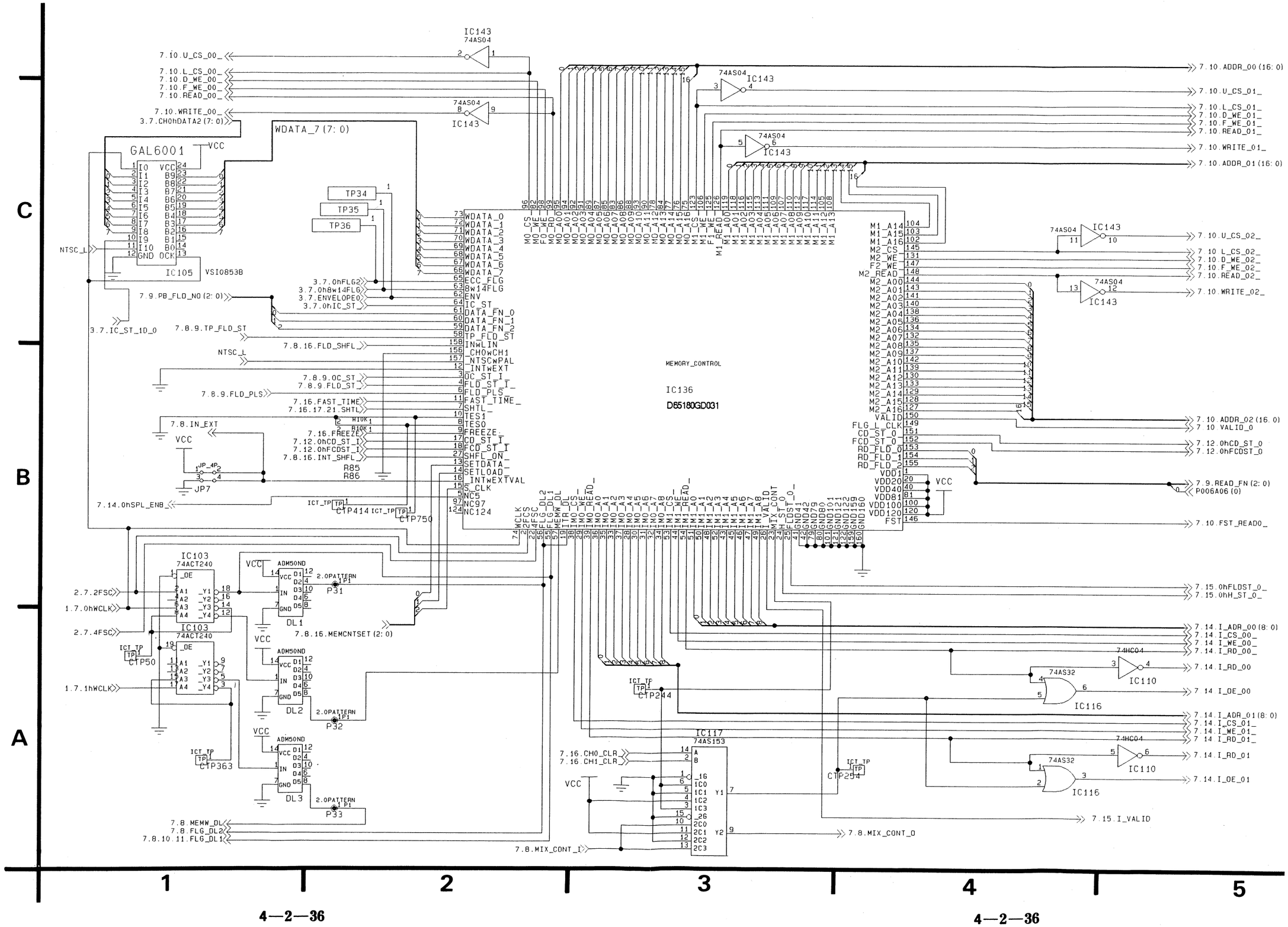

4—2—36

L3 VIDEO/AUDIO PB SCHEMATIC DIAGRAM (8/25)

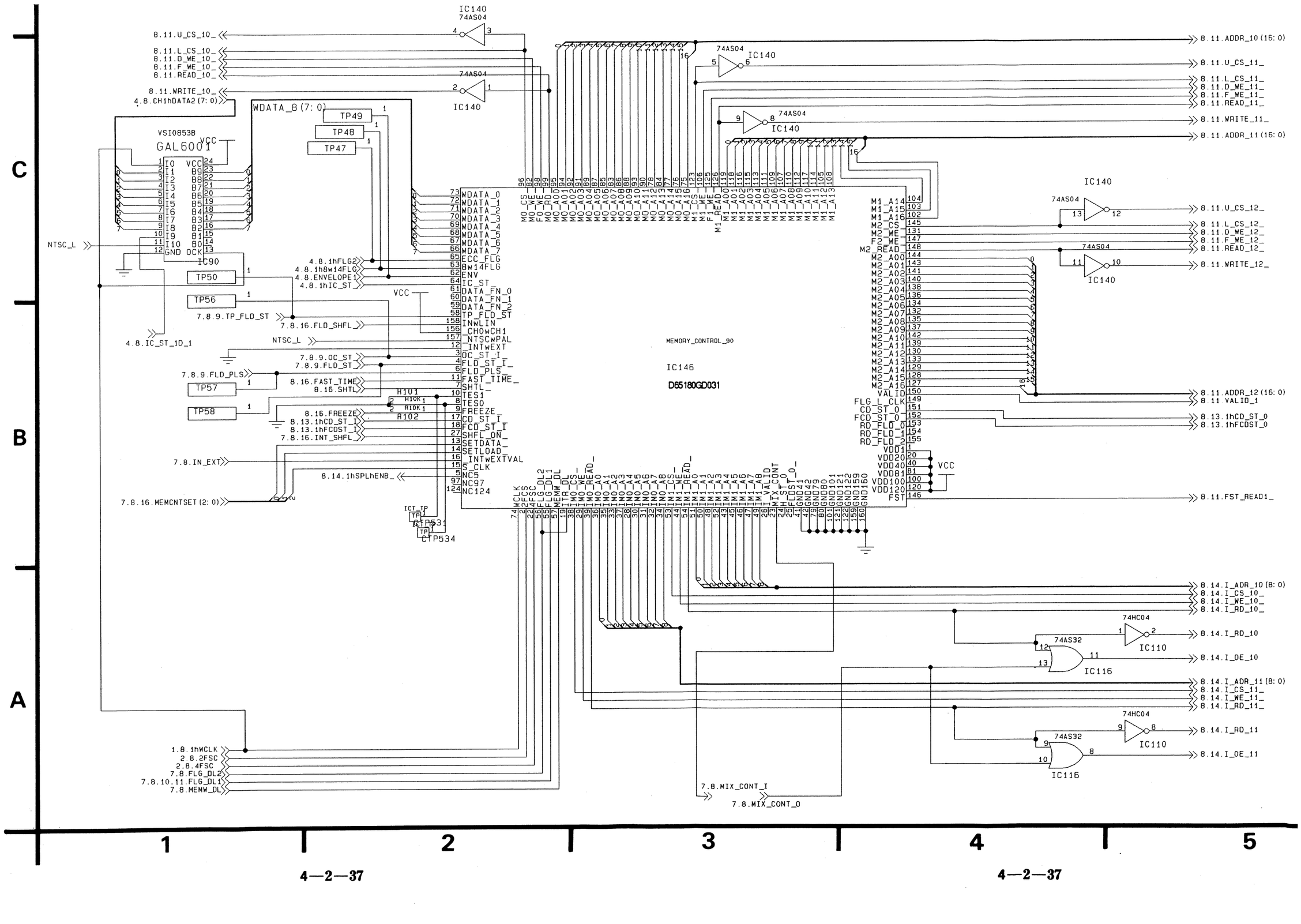

4—2—37

L3 VIDEO/AUDIO PB SCHEMATIC DIAGRAM (9/25)

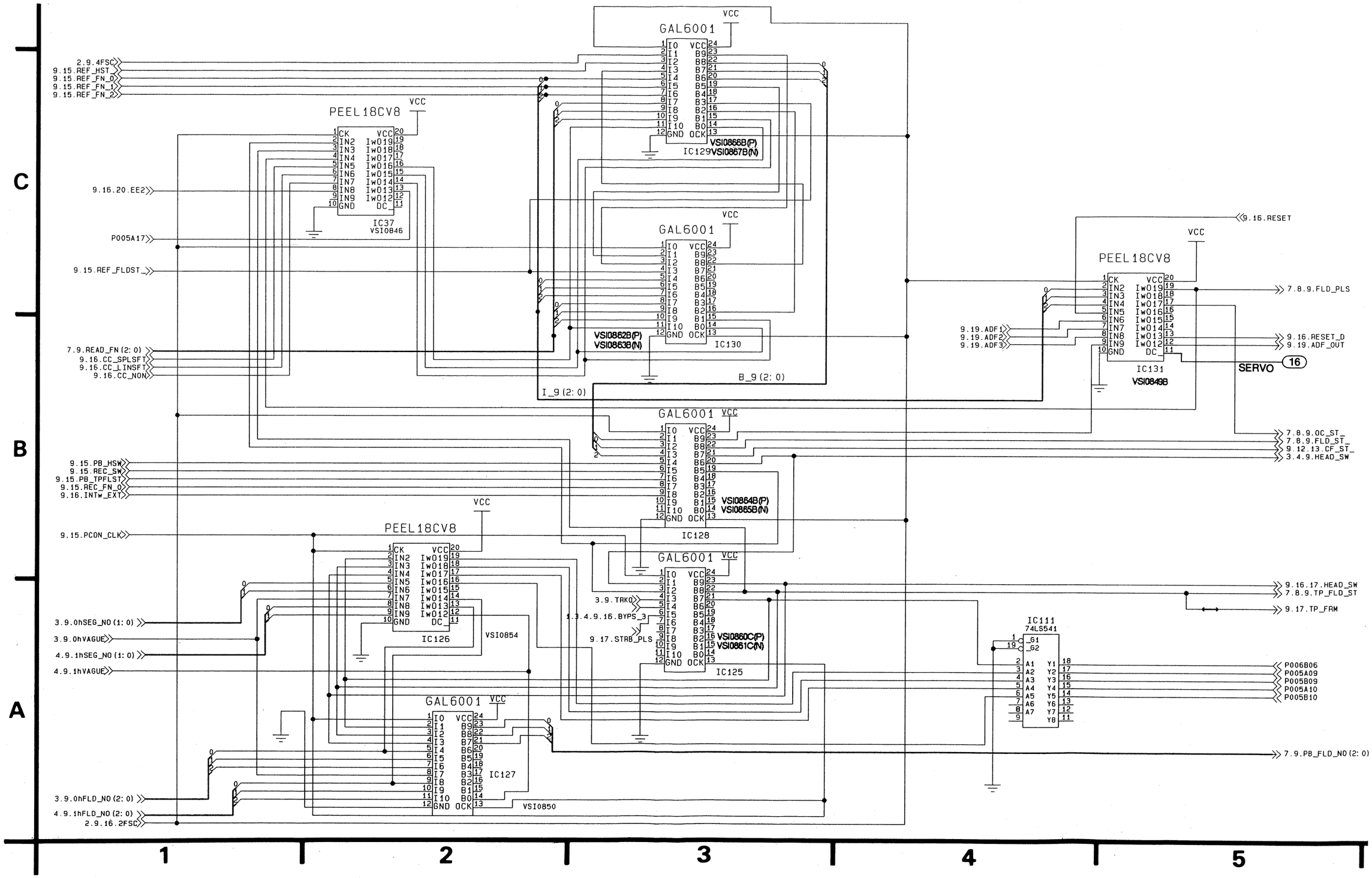

4—2—38

L3 VIDEO/AUDIO PB SCHEMATIC DIAGRAM (10/25)

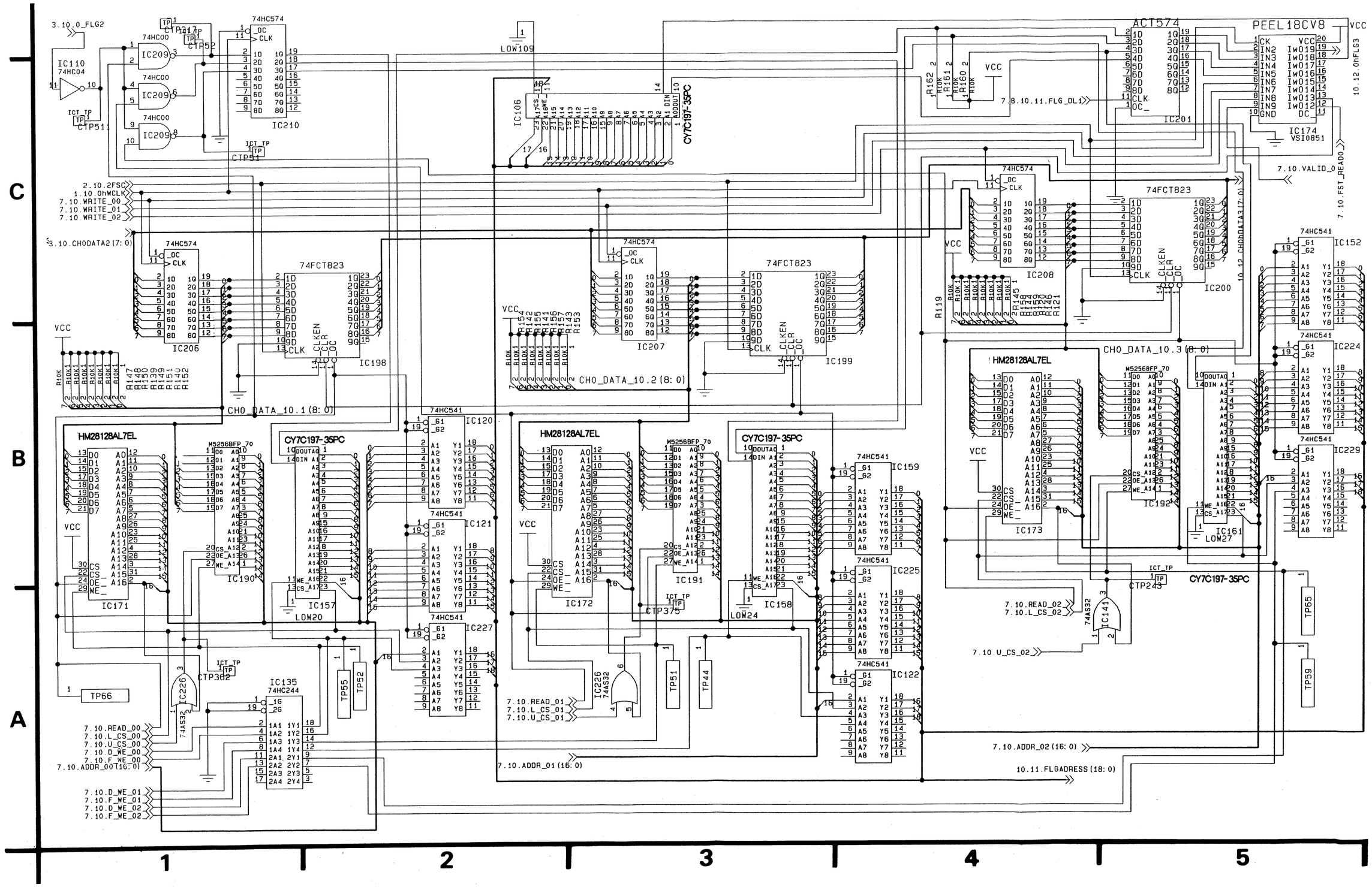

4—2—39

L3 VIDEO/AUDIO PB SCHEMATIC DIAGRAM (11/25)

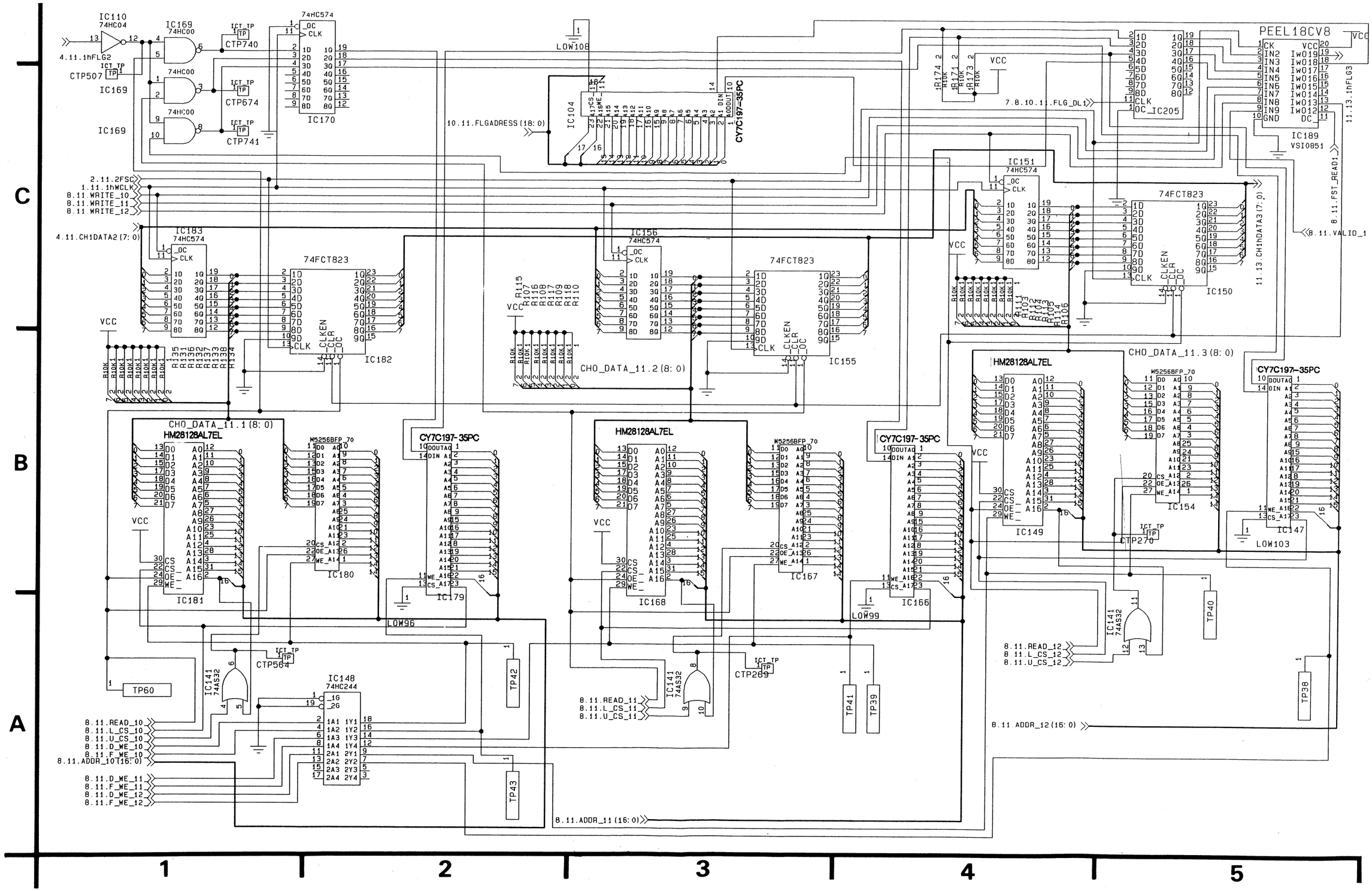

4—2—40

L3 VIDEO/AUDIO PB SCHEMATIC DIAGRAM (12/25)

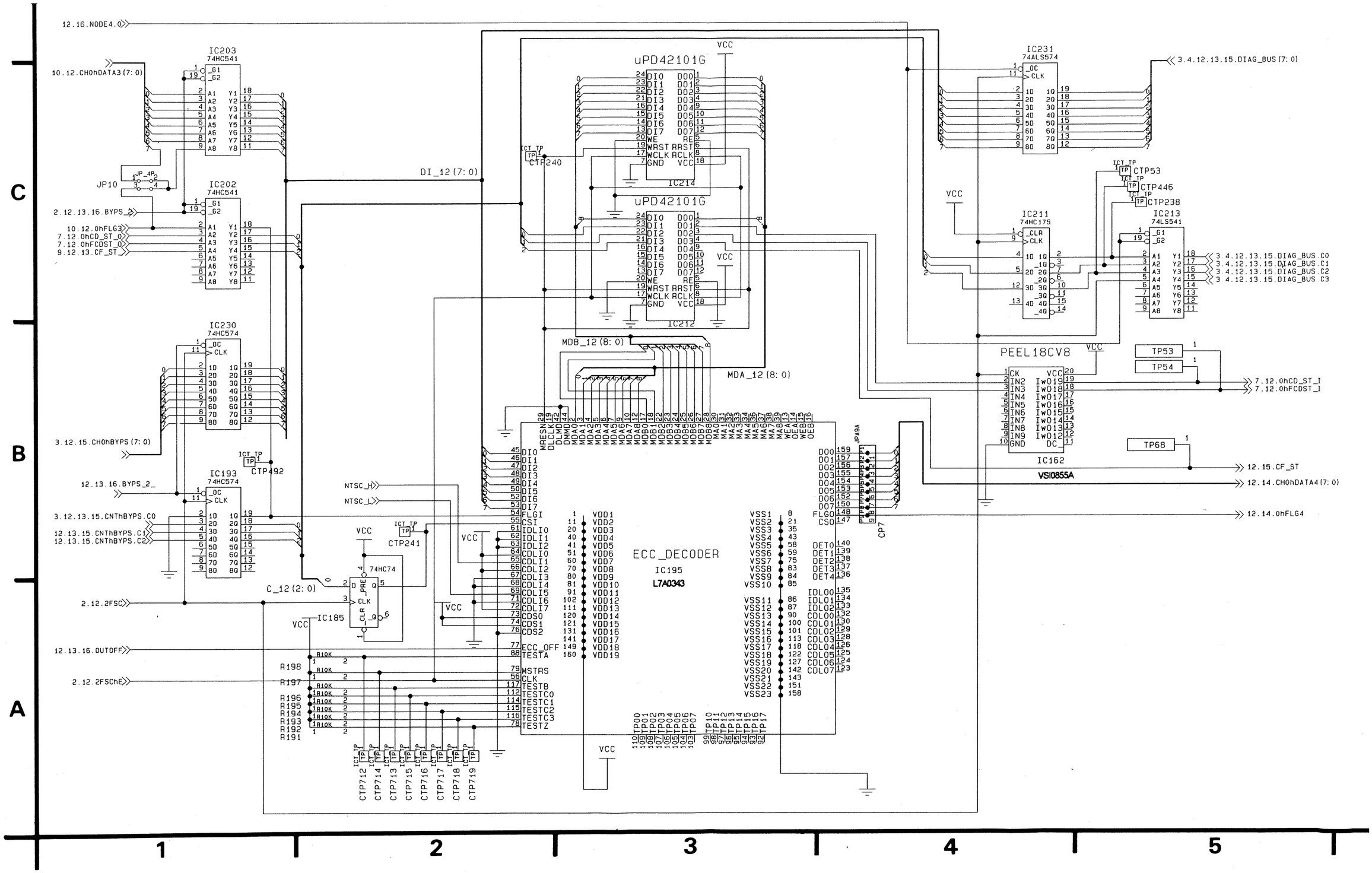

L3 VIDEO/AUDIO PB SCHEMATIC DIAGRAM (13/25)

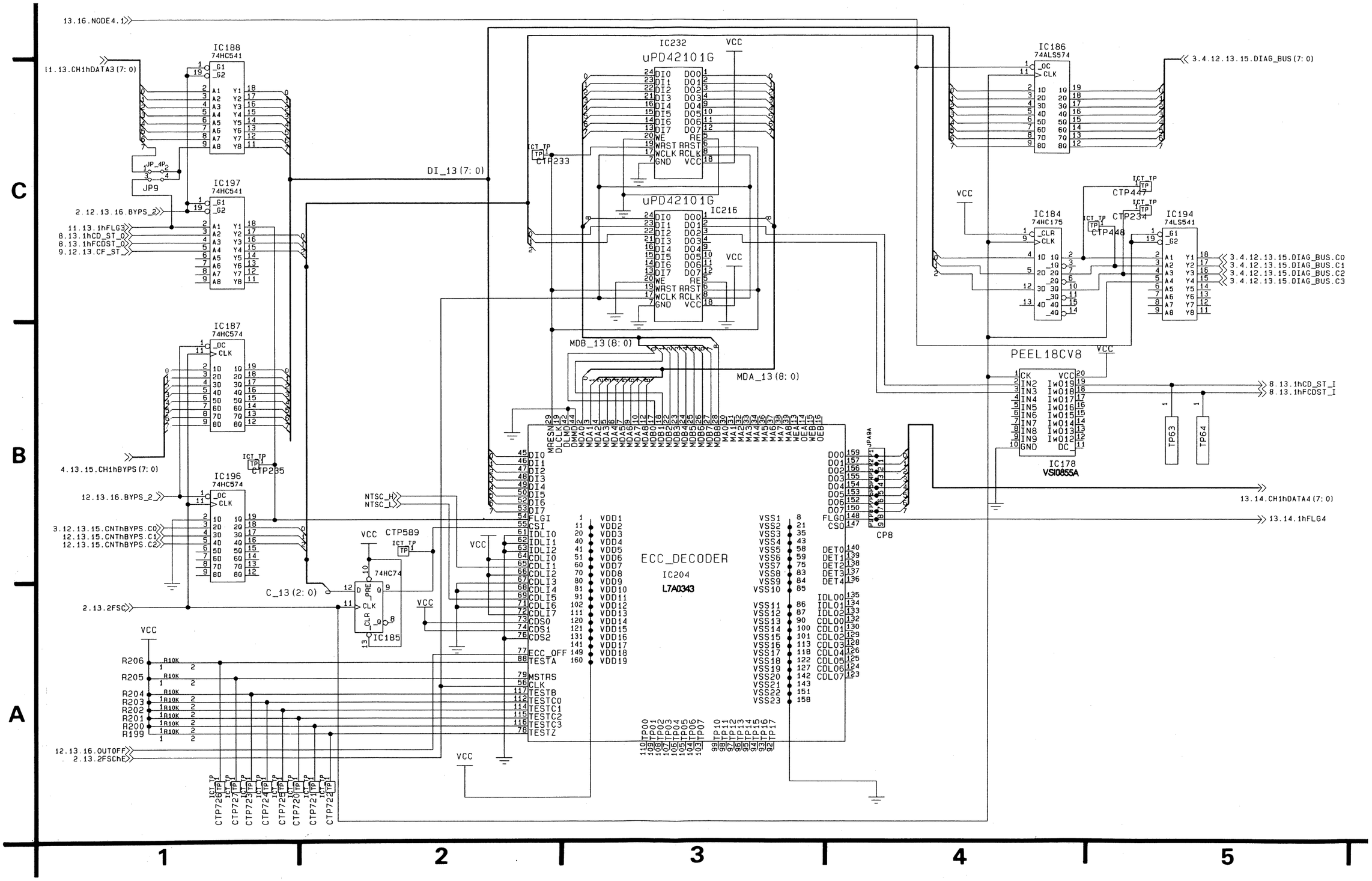

4—2—42

L3 VIDEO/AUDIO PB SCHEMATIC DIAGRAM (14/25)

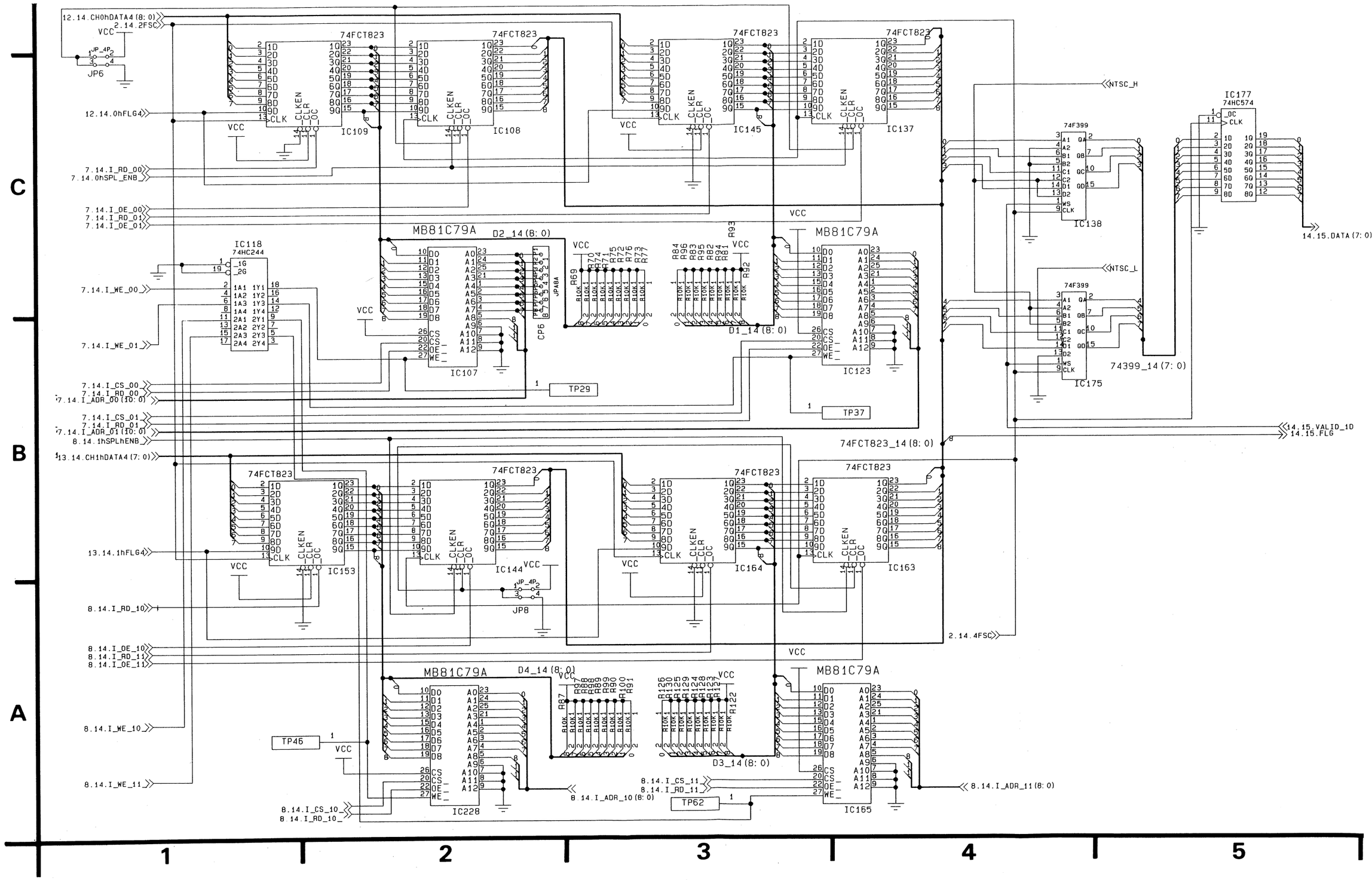

4—2—43

L3 VIDEO/AUDIO PB SCHEMATIC DIAGRAM (15/25)

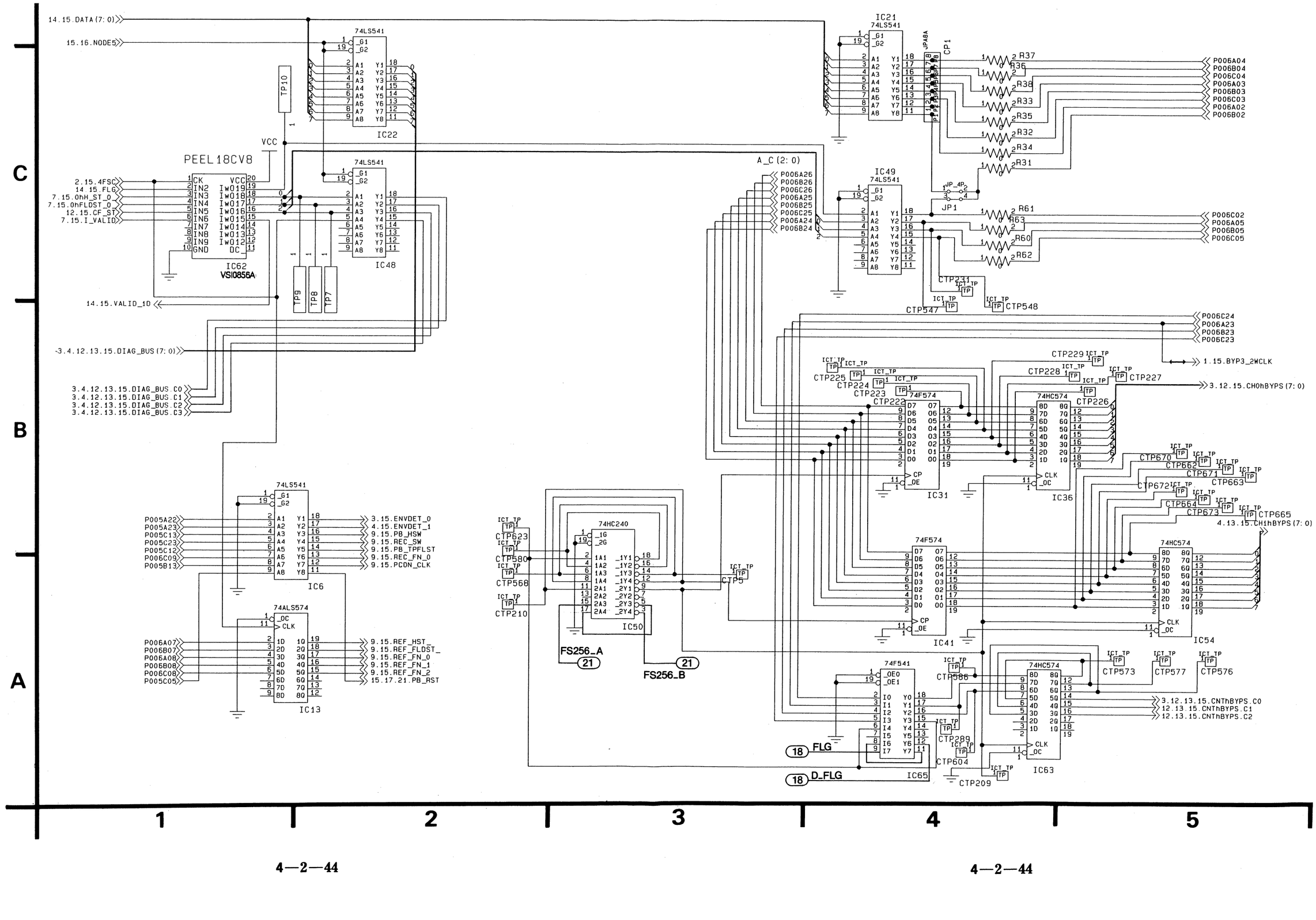

4—2—44

L3 VIDEO/AUDIO PB SCHEMATIC DIAGRAM (16/25)

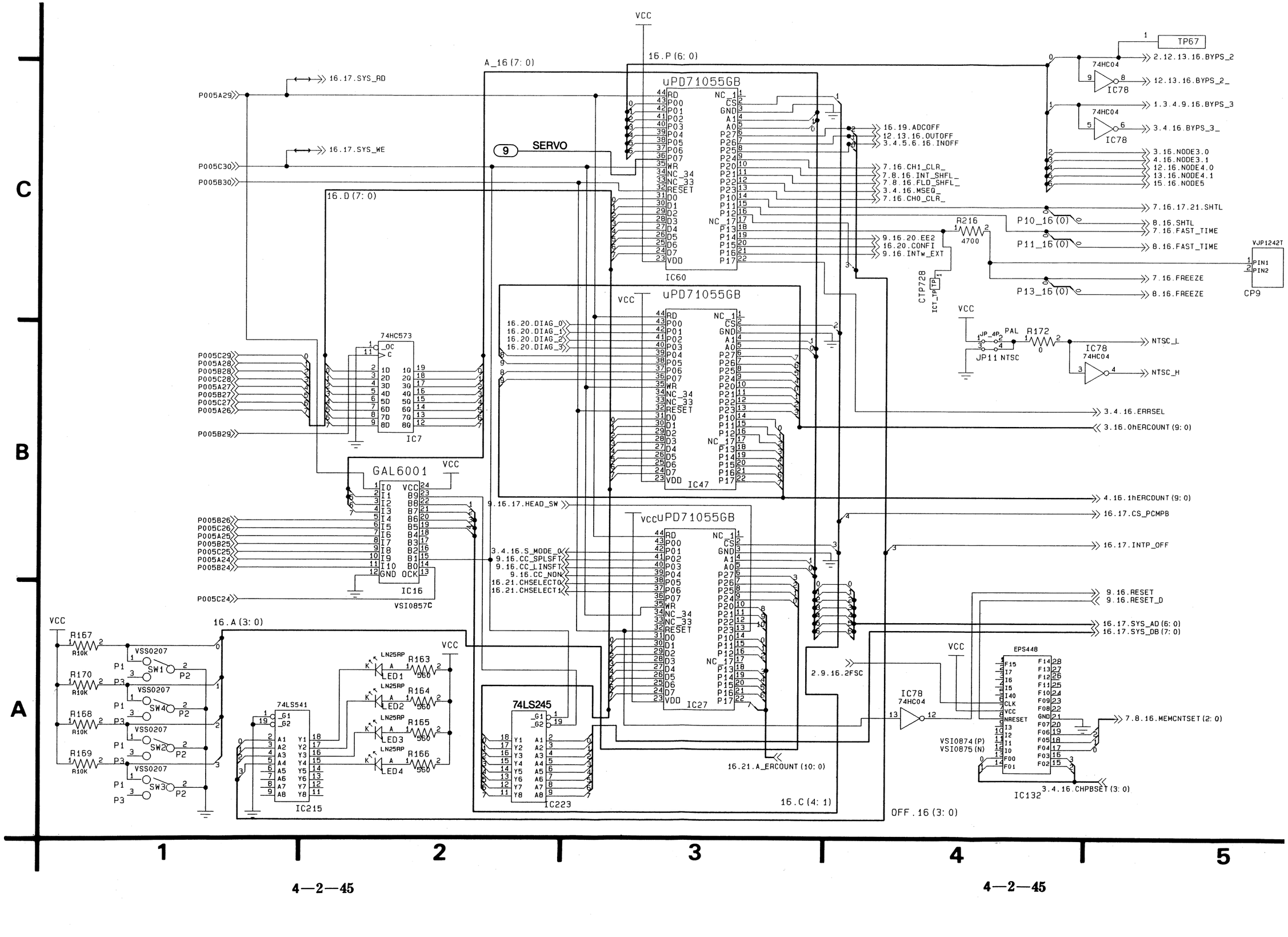

4—2—45

4—2—45

L3 VIDEO/AUDIO PB SCHEMATIC DIAGRAM (17/25)

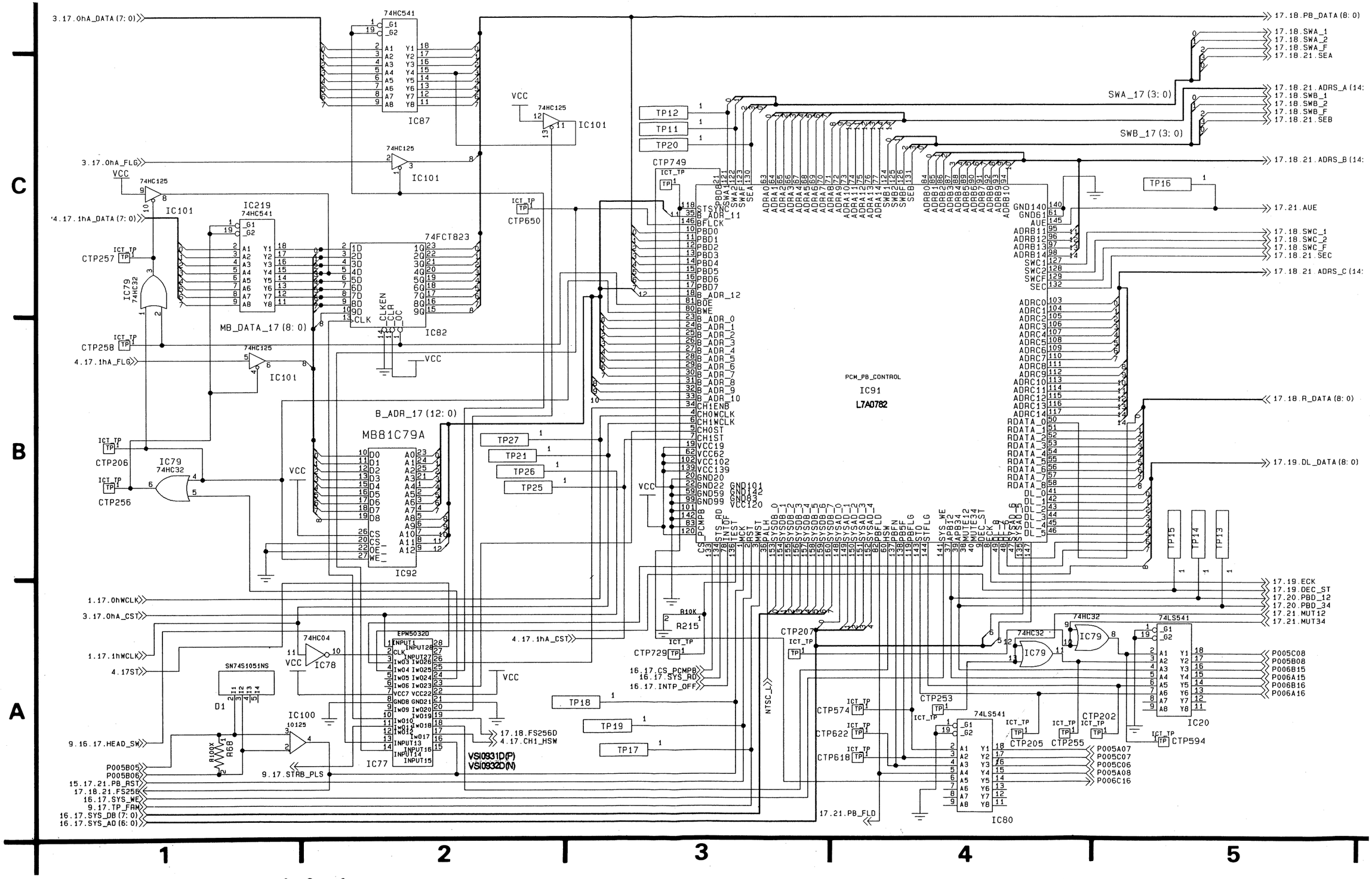

4—2—46

L3 VIDEO/AUDIO PB SCHEMATIC DIAGRAM (18/25)

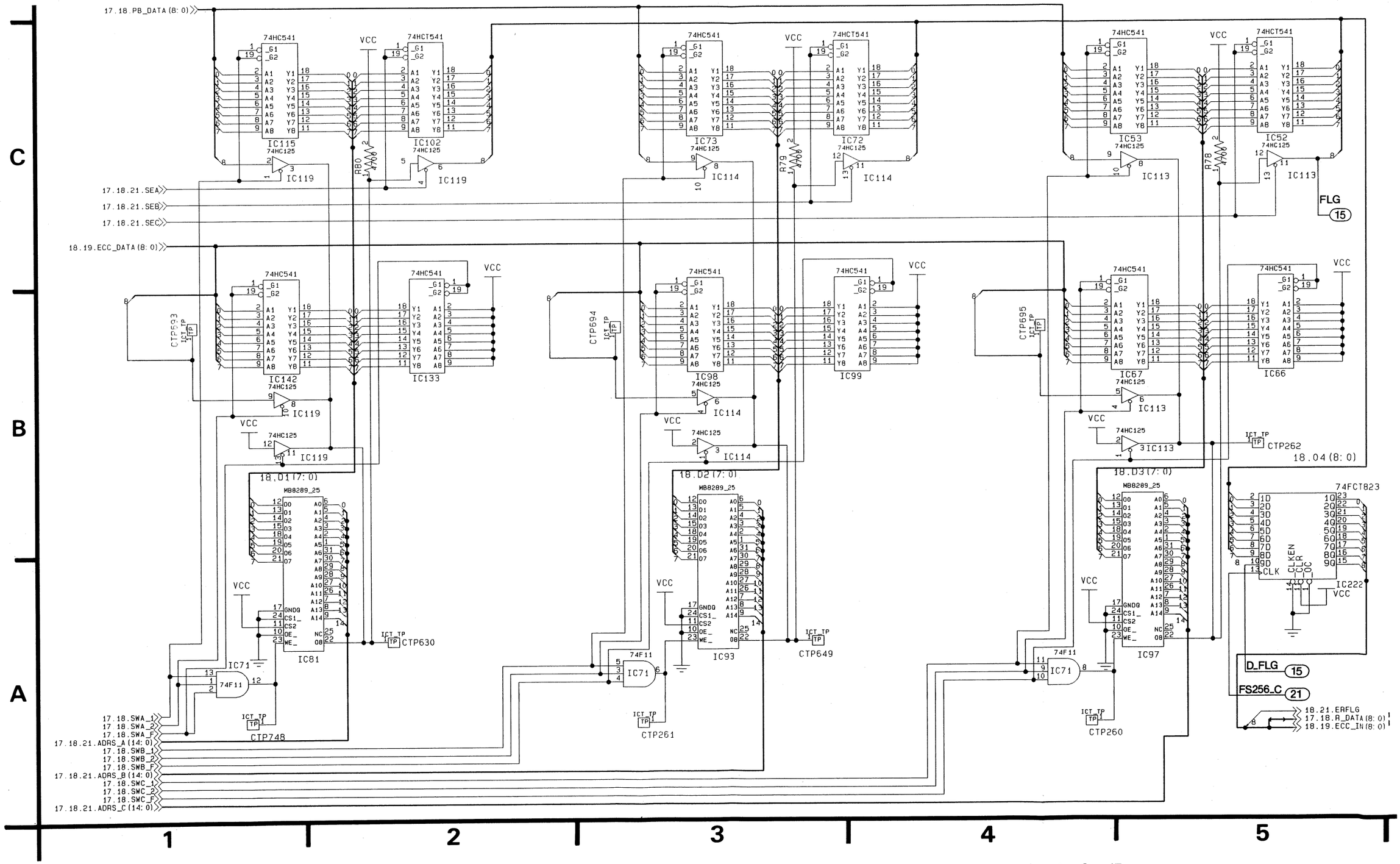

4—2—47

L3 VIDEO/AUDIO PB SCHEMATIC DIAGRAM (19/25)

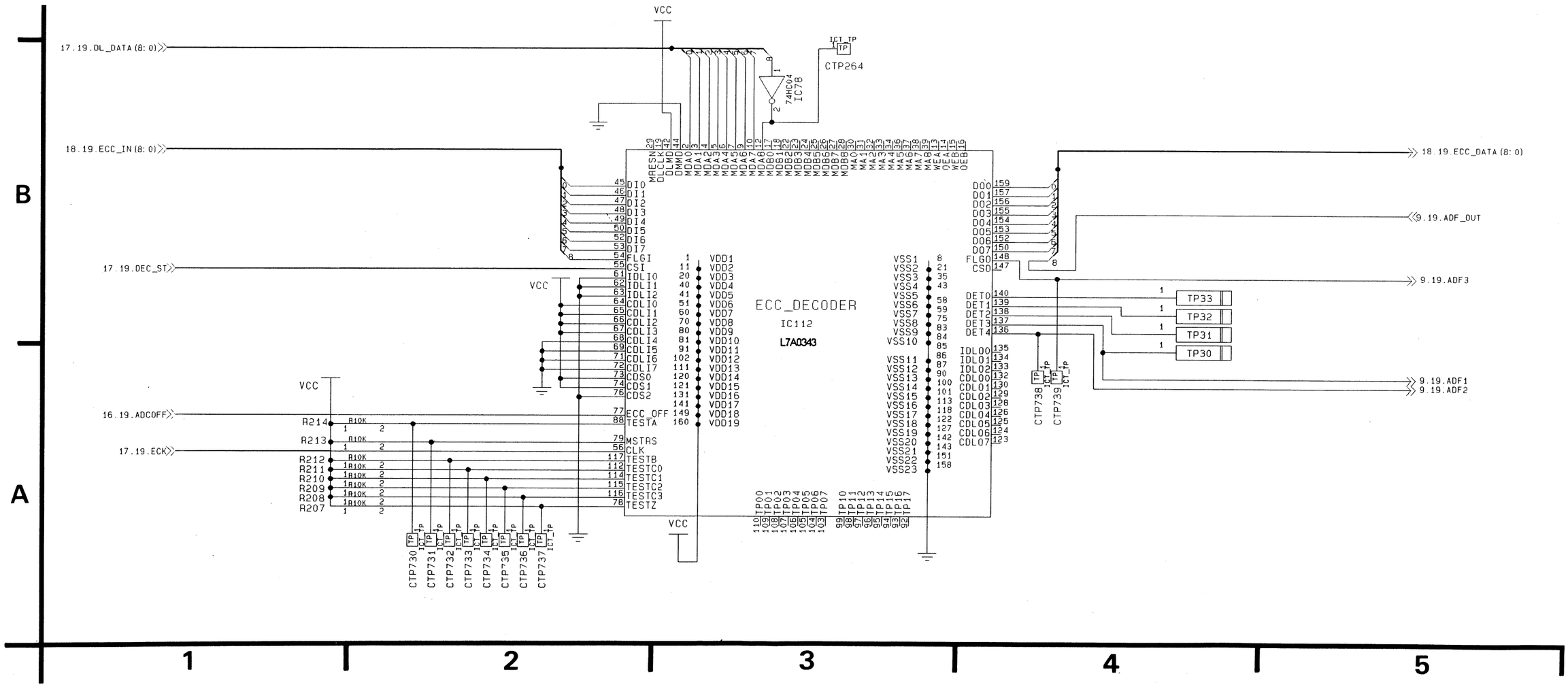

4—2—48

L3 VIDEO/AUDIO PB SCHEMATIC DIAGRAM (20/25)

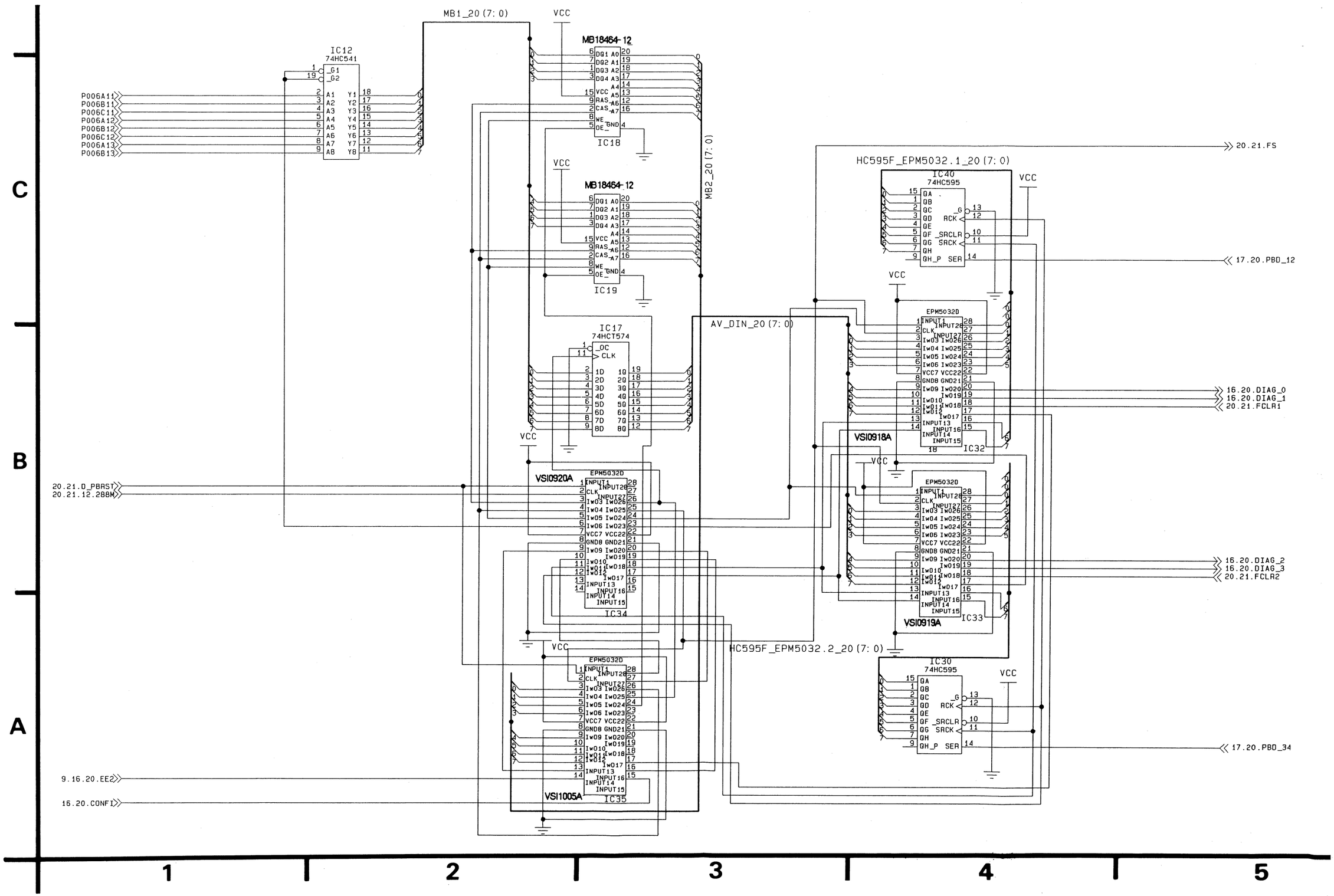

4—2—49

L3 VIDEO/AUDIO PB SCHEMATIC DIAGRAM (21/25)

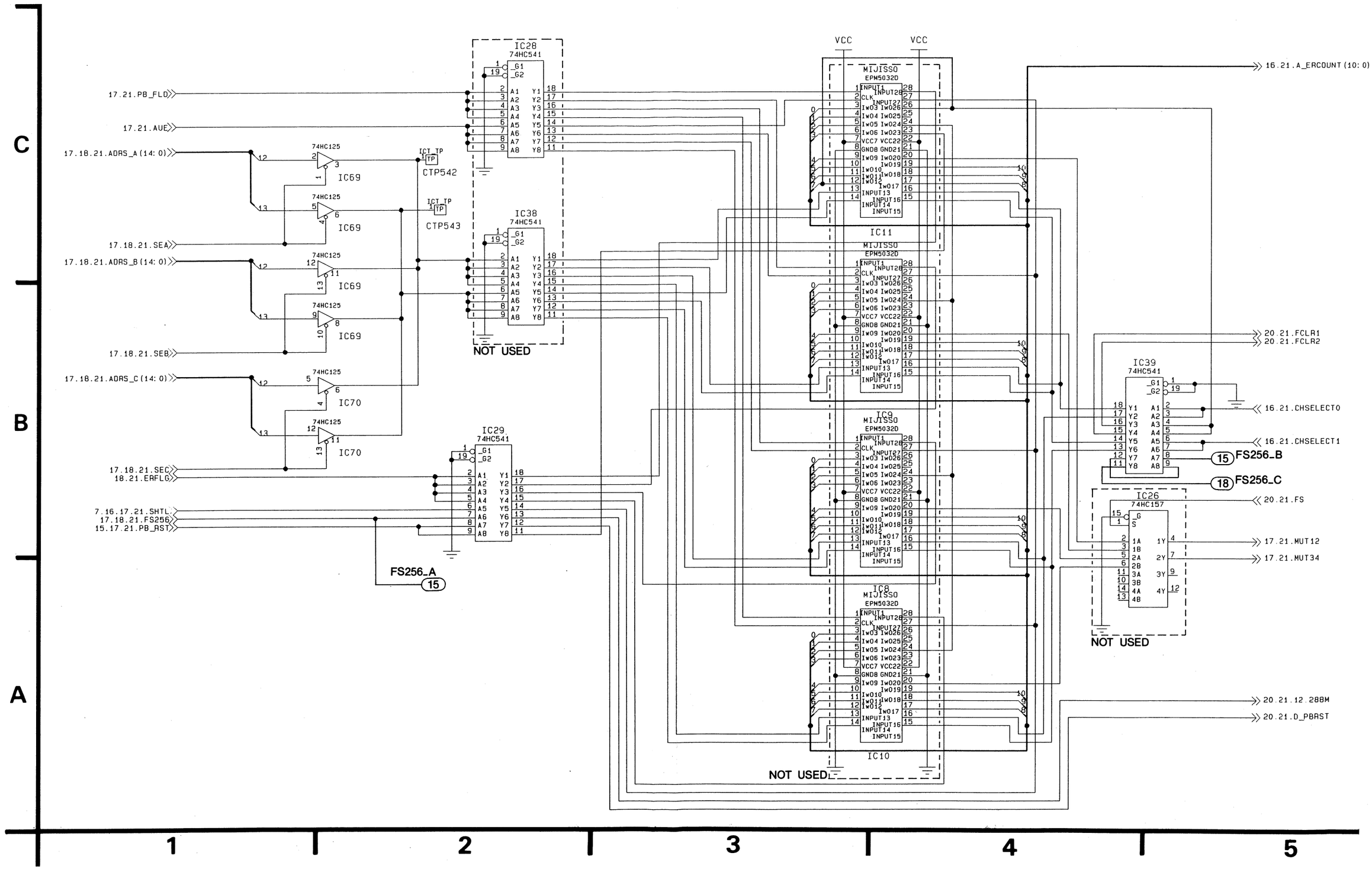

C B A

1 2 3 4 5

4—2—50

L3 VIDEO/AUDIO PB SCHEMATIC DIAGRAM (22/25) [L MOTHER (P005, P006) SCHEMATIC DIAGRAM (3/7) FOR L3]

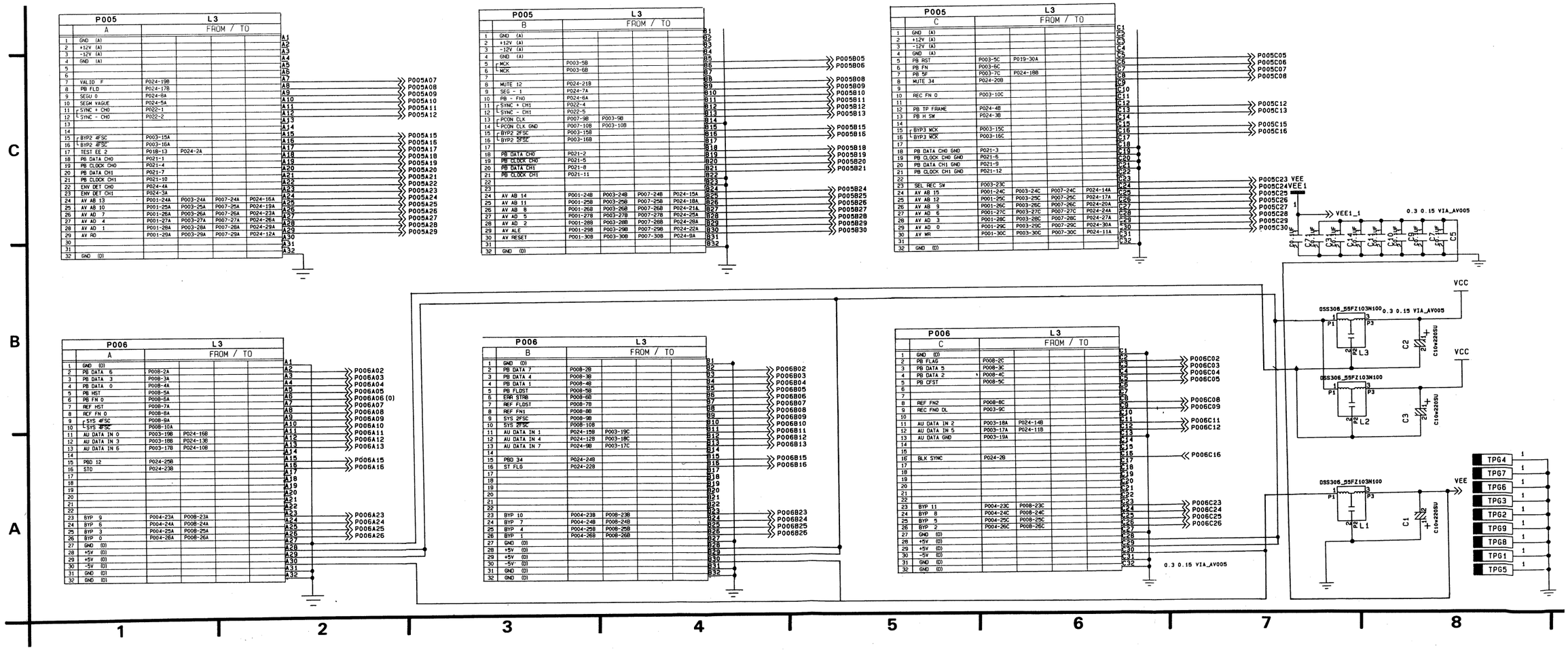

4—2—51

L3 VIDEO/AUDIO PB SCHEMATIC DIAGRAM (23/25)

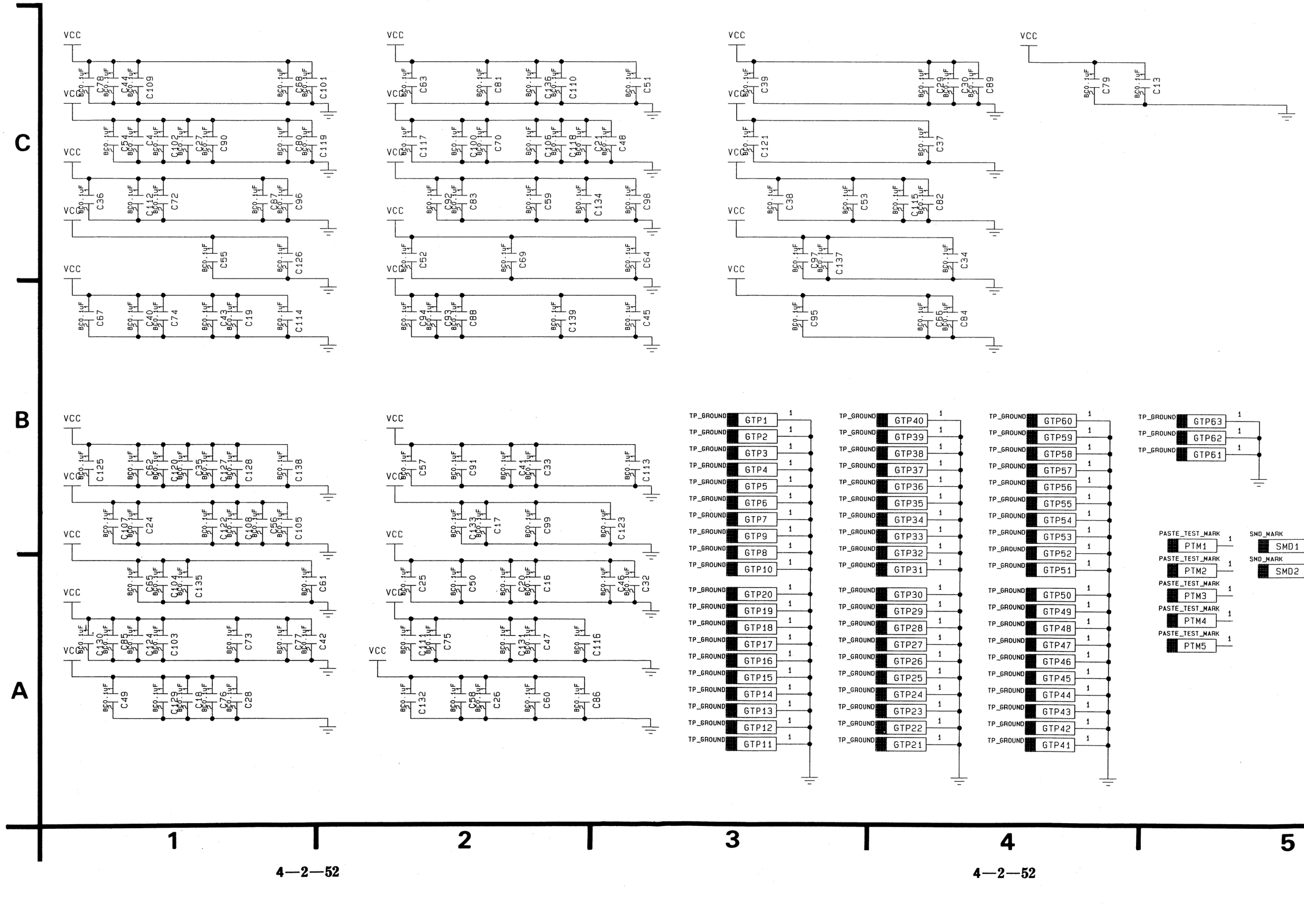

4—2—52

4—2—52

NTSC

L3 WAVEFORMS NTSC

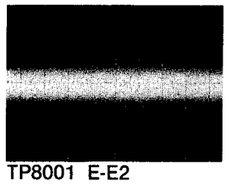
TP8001 E-E2
20mV/20μsec. div.

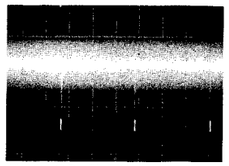
TP8009 E-E2
2V/20μsec. div.

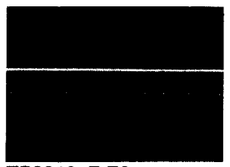
TP8016 E-E2
5V/5μsec. div.

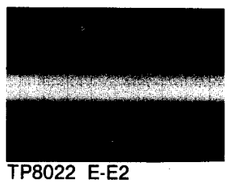
TP8022 E-E2
(TP8023, TP8024, TP8025)
100mV/20μsec. div.

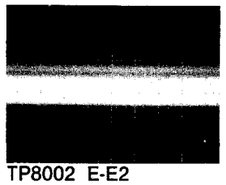
TP8002 E-E2
(TP8003)
500V/20μsec. div.

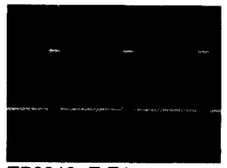
TP8010 E-E4
2V/20μsec. div.

TP8017 E-E2
2V/10msec. div.

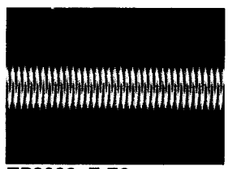
TP8026 E-E2
200mV/500nsec. div.

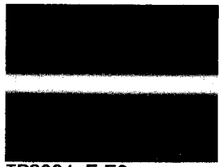
TP8004 E-E2
50mV/20μsec. div.

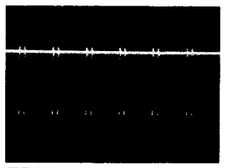
TP8011 E-E2
2V/10μsec. div.

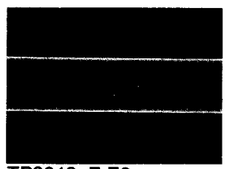
TP8018 E-E2
2V/20μsec. div.

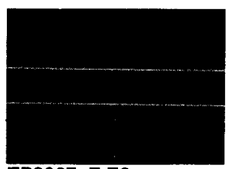
TP8027 E-E2
2V/20μsec. div.

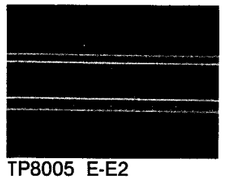
TP8005 E-E2
(TP8006)
2V/20μsec. div.

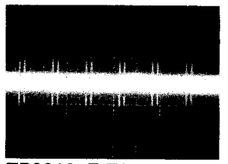
TP8012 E-E2
100mV/10μsec. div.

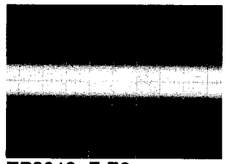
TP8019 E-E2
100mV/20μsec. div.

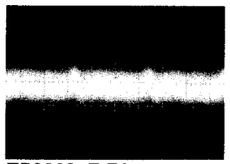
TP8028 E-E2
50mV/20μsec. div.

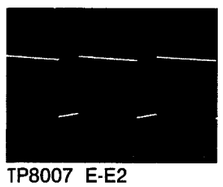
TP8007 E-E2
2V/20msec. div.

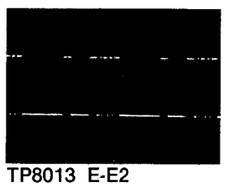
TP8013 E-E2
(TP8014)
2V/5μsec. div.

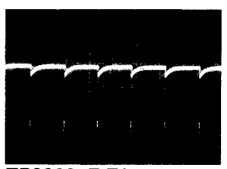
TP8020 E-E2
2V/10μsec. div.

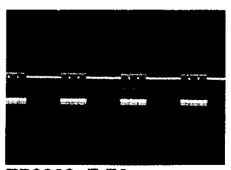
TP8029 E-E2
5V/50μsec. div.

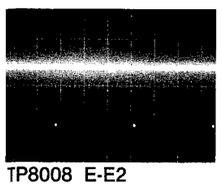
TP8008 E-E2
2V/5msec. div.

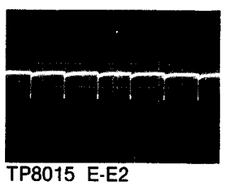
TP8015 E-E2
5V/10μsec. div.

TP8021 E-E2
2V/20μsec. div.

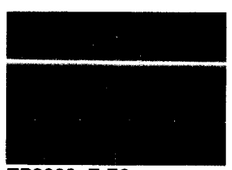
TP8030 E-E2
(TP8031, TP8032, TP8033)
2V/10msec. div.

L3 WAVEFORMS NTSC

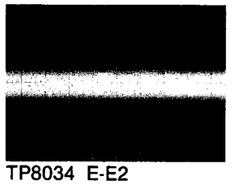
TP8034 E-E2
50mV/20μsec. div.

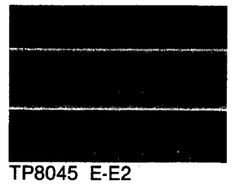
TP8045 E-E2
2V/5μsec. div.

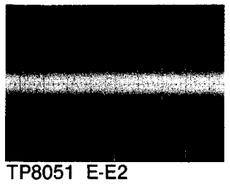
TP8051 E-E2
(TP8052)
50mV/500μsec. div.

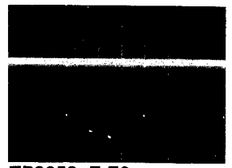
TP8058 E-E2
2V/5msec. div.

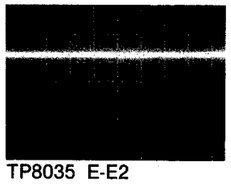
TP8035 E-E2
2V/20μsec. div.

TP8046 E-E2
5V/50μsec. div.

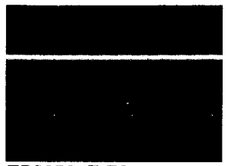
TP8053 E-E2
2V/5msec. div.

TP8059 E-E2
5V/20μsec. div.

TP8036 E-E2
50mV/20μsec. div.

TP8047 E-E2
50mV/20μsec. div.

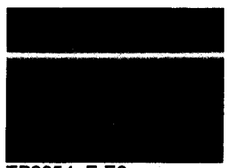
TP8054 E-E2
2V/50μsec. div.

TP8060 E-E2
5V/20msec. div.

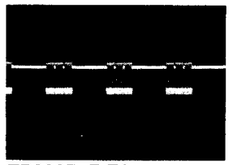
TP8037 E-E2
5V/50μsec. div.

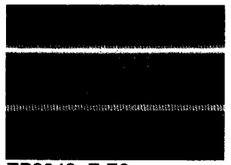
TP8048 E-E2
2V/1μsec. div.

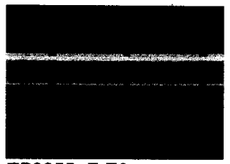
TP8055 E-E2
5V/20μsec. div.

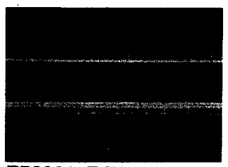
TP8061 E-E2
2V/2μsec. div.

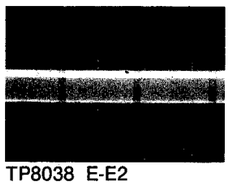
TP8038 E-E2
(TP8041, TP8043, TP8044)
5V/20μsec. div.

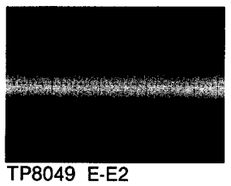
TP8049 E-E2
50mV/20μsec. div.

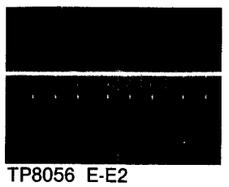
TP8056 E-E2
5V/20μsec. div.

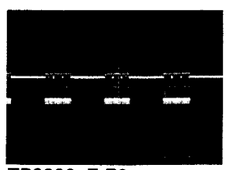
TP8062 E-E2
5V/50μsec. div.

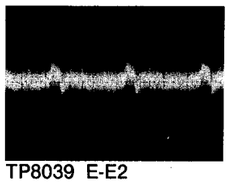
TP8039 E-E2
(TP8040, TP8042)
50mV/20μsec. div.

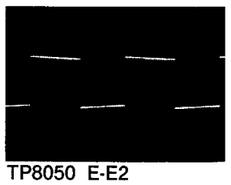
TP8050 E-E2
2V/10msec. div.

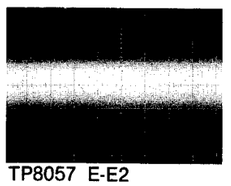
TP8057 E-E2
20mV/20μsec. div.

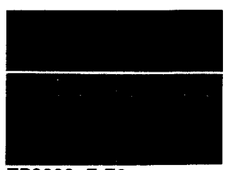
TP8063 E-E2
5V/20μsec. div.

L3 WAVEFORMS NTSC

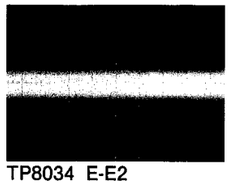

TP8034 E-E2
50mV/20µsec. div.

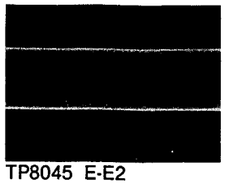

TP8045 E-E2
2V/5µsec. div.

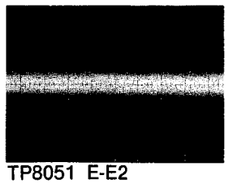

TP8051 E-E2
(TP8052)
50mV/500µsec. div.

TP8058 E-E2
2V/5msec. div.

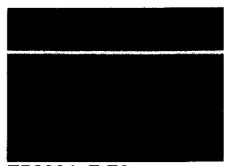

TP8064 E-E2
2V/5msec. div.

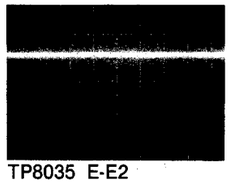

TP8035 E-E2
2V/20µsec. div.

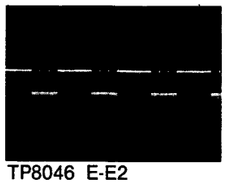

TP8046 E-E2
5V/50µsec. div.

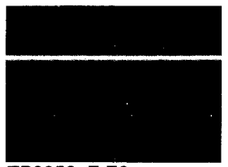

TP8053 E-E2
2V/5msec. div.

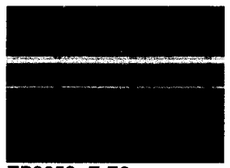

TP8059 E-E2
5V/20µsec. div.

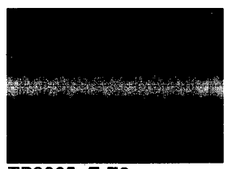

TP8065 E-E2
50mV/20µsec. div.

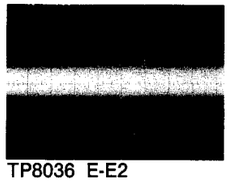

TP8036 E-E2
50mV/20µsec. div.

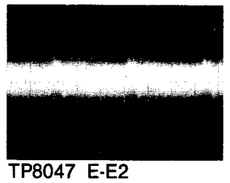

TP8047 E-E2
50mV/20µsec. div.

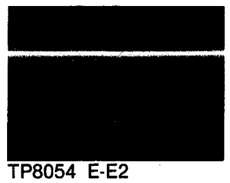

TP8054 E-E2
2V/50µsec. div.

TP8060 E-E2
5V/20msec. div.

TP8066 E-E2
5V/20µsec. div.

TP8037 E-E2
5V/50µsec. div.

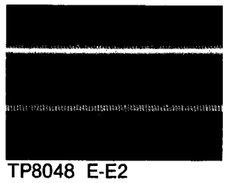

TP8048 E-E2
2V/1µsec. div.

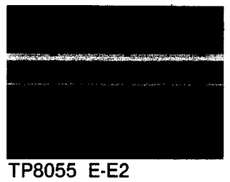

TP8055 E-E2
5V/20µsec. div.

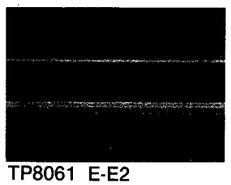

TP8061 E-E2
2V/2µsec. div.

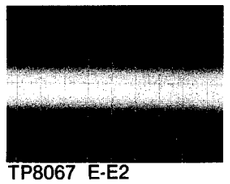

TP8067 E-E2
20mV/20µsec. div.

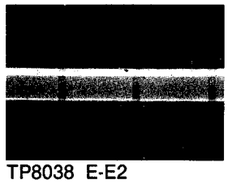

TP8038 E-E2
(TP8041, TP8043, TP8044)
5V/20µsec. div.

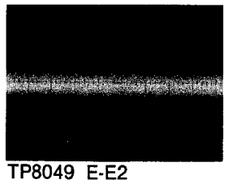

TP8049 E-E2
50mV/20µsec. div.

TP8056 E-E2
5V/20µsec. div.

TP8062 E-E2
5V/50µsec. div.

TP8068 E-E2
2V/20msec. div.

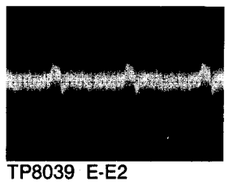

TP8039 E-E2
(TP8040, TP8042)
50mV/20µsec. div.

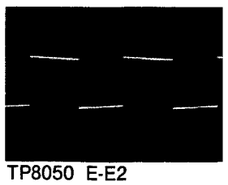

TP8050 E-E2
2V/10msec. div.

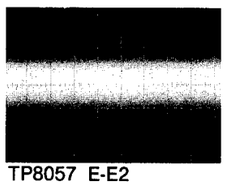

TP8057 E-E2
20mV/20µsec. div.

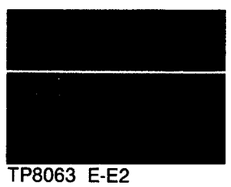

TP8063 E-E2
5V/20µsec. div.

PAL

L3 WAVEFORMS PAL

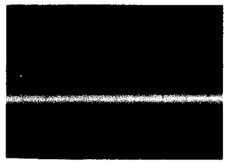
TP8001 E-E2
20mV/20µsec. div.

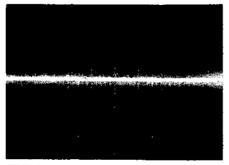
TP8009 E-E2
2V/20µsec. div.

TP8016 E-E2
2V/20µsec. div.

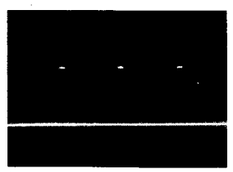
TP8022 E-E2
2V/2msec. div.

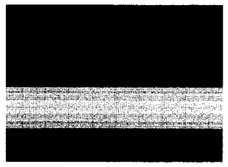
TP8002 E-E2
(TP8003)
500mV/20µsec. div.

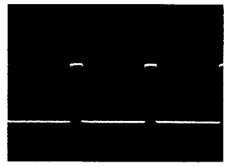
TP8010 E-E2
2V/20µsec. div.

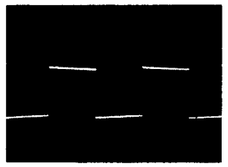
TP8017 E-E2
2V/10msec. div.

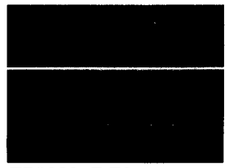
TP8023 E-E2
(TP8024)
2V/10µsec. div.

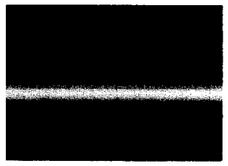
TP8004 E-E2
20mV/20µsec. div.

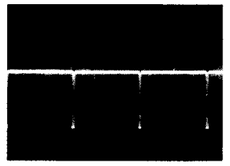
TP8011 E-E2
2V/5µsec. div.

TP8018 E-E2
2V/10µsec. div.

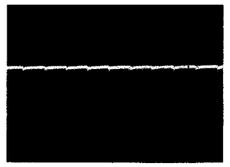
TP8025 E-E2
(TP8026)
2V/10µsec. div.

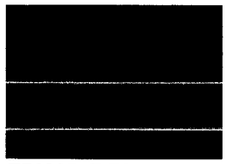
TP8005 E-E2
(TP8006)
2V/20µsec. div.

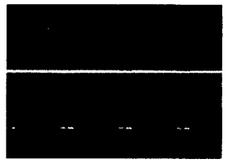
TP8012 E-E2
2V/2msec. div.

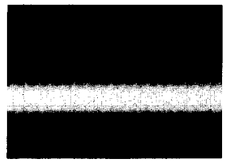
TP8019 E-E2
100mV/20µsec. div.

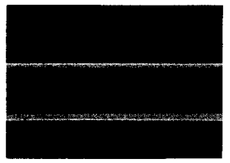
TP8027 E-E2
2V/10µsec. div.

TP8007 E-E2
2V/20msec. div.

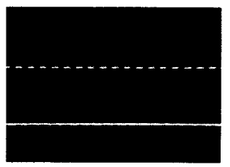
TP8013 E-E2
(TP8014)
2V/20µsec. div.

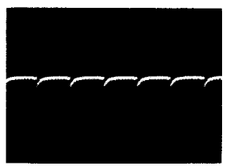
TP8020 E-E2
2V/10µsec. div.

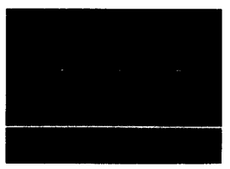
TP8028 E-E2
2V/2msec. div.

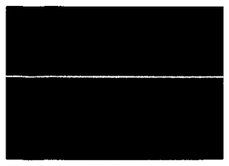
TP8008 E-E2
2V/10msec. div.

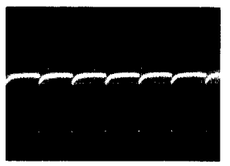
TP8015 E-E2
2V/10µsec. div.

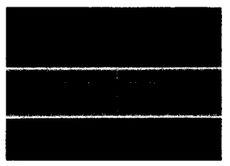
TP8021 E-E2
2V/20µsec. div.

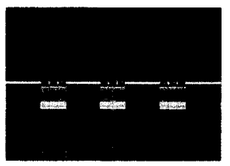
TP8029 E-E2
5V/50µsec. div.

L3 WAVEFORMS PAL

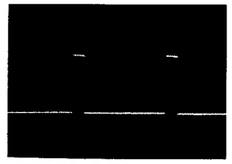
TP8030 E-E2
(TP8031, TP8032, TP8033)
2V/5msec. div.

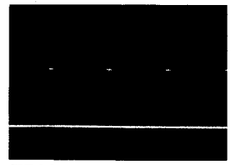
TP8047 E-E2
2V/2msec. div.

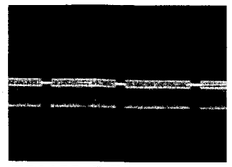
TP8055 E-E2
5V/20µsec. div.

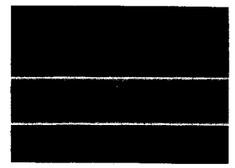
TP8061 E-E2
2V/200µsec. div.

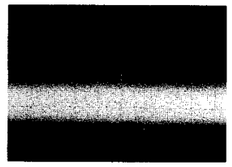
TP8034 E-E2
(TP8035, TP8036)
50mV/20µsec. div.

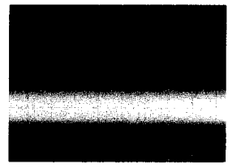
TP8048 E-E2
(TP8049)
50mV/20µsec. div.

TP8056 E-E2
5V/20µsec. div.

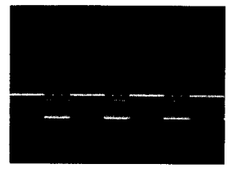
TP8062 E-E2
5V/50µsec. div.

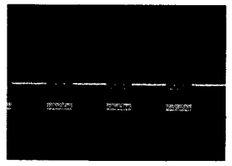
TP8037 E-E2
5V/50µsec. div.

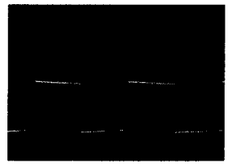
TP8050 E-E2
2V/10msec. div.

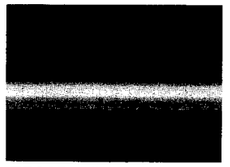
TP8057 E-E2
20mV/20µsec. div.

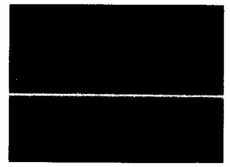
TP8063 E-E2
5V/20µsec. div.

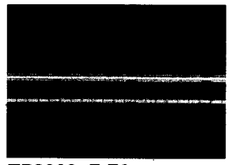
TP8038 E-E2
(TP8039, TP8040, TP8041,
TP8042, TP8043, TP8044)
5V/20µsec. div.

TP8051 E-E2
(TP8052)
2V/10µsec. div.

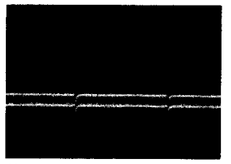
TP8058 E-E2
500mV/5msec. div.

TP8064 E-E2
2V/10msec. div.

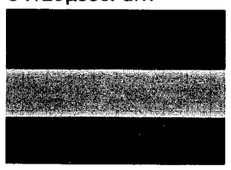
TP8045 E-E2
2V/20µsec. div.

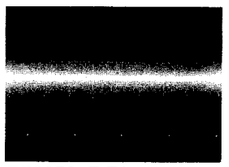
TP8053 E-E2
2V/10msec. div.

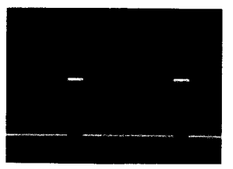
TP8059 E-E2
2V/2µsec. div.

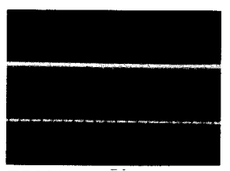
TP8065 E-E2
2V/20µsec. div.

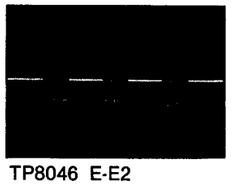
TP8046 E-E2
5V/50µsec. div.

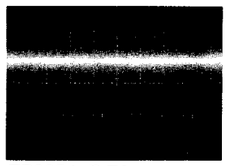
TP8054 E-E2
2V/50µsec. div.

TP8060 E-E2
2V/10msec. div.

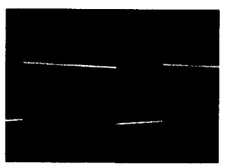
TP8066 E-E2
2V/10msec. div.

L3 WAVEFORMS PAL

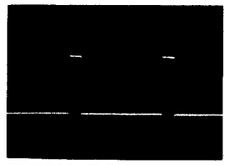

TP8030 E-E2
(TP8031, TP8032, TP8033)
2V/5msec. div.

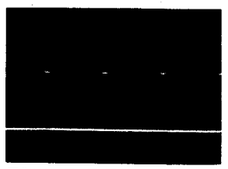

TP8047 E-E2
2V/2msec. div.

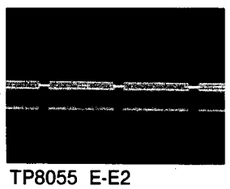

TP8055 E-E2
5V/20µsec. div.

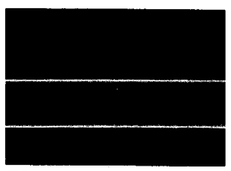

TP8061 E-E2
2V/200µsec. div.

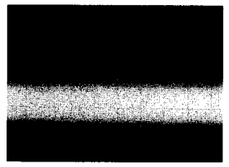

TP8034 E-E2
(TP8035, TP8036)
50mV/20µsec. div.

TP8048 E-E2
(TP8049)
50mV/20µsec. div.

TP8056 E-E2
5V/20µsec. div.

TP8062 E-E2
5V/50µsec. div.

TP8037 E-E2
5V/50µsec. div.

TP8050 E-E2
2V/10msec. div.

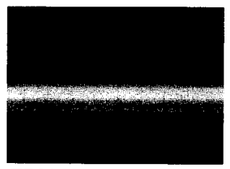

TP8057 E-E2
20mV/20µsec. div.

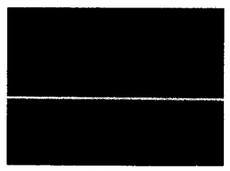

TP8063 E-E2
5V/20µsec. div.

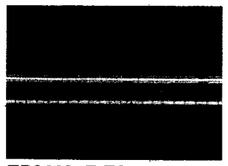

TP8038 E-E2
(TP8039, TP8040, TP8041,
TP8042, TP8043, TP8044)
5V/20µsec. div.

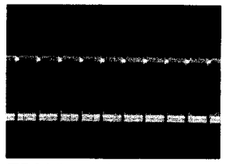

TP8051 E-E2
(TP8052)
2V/10µsec. div.

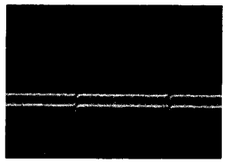

TP8058 E-E2
500mV/5msec. div.

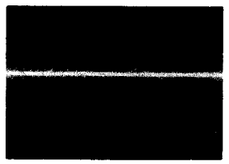

TP8064 E-E2
2V/10msec. div.

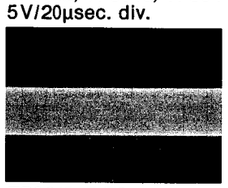

TP8045 E-E2
2V/20µsec. div.

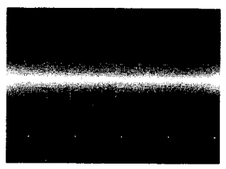

TP8053 E-E2
2V/10msec. div.

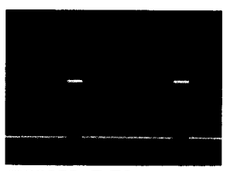

TP8059 E-E2
2V/2µsec. div.

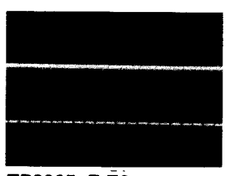

TP8065 E-E2
2V/20µsec. div.

TP8046 E-E2
5V/50µsec. div.

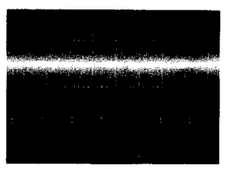

TP8054 E-E2
2V/50µsec. div.

TP8060 E-E2
2V/10msec. div.

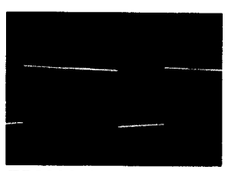

TP8066 E-E2
2V/10msec. div.

L3 WAVEFORMS PAL

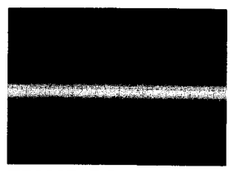

TP8067 E-E2
20mV/20µsec. div.

TP8068 E-E2
2V/20msec. div.

L3 VIDEO/AUDIO PB SCHEMATIC DIAGRAM (24/25)

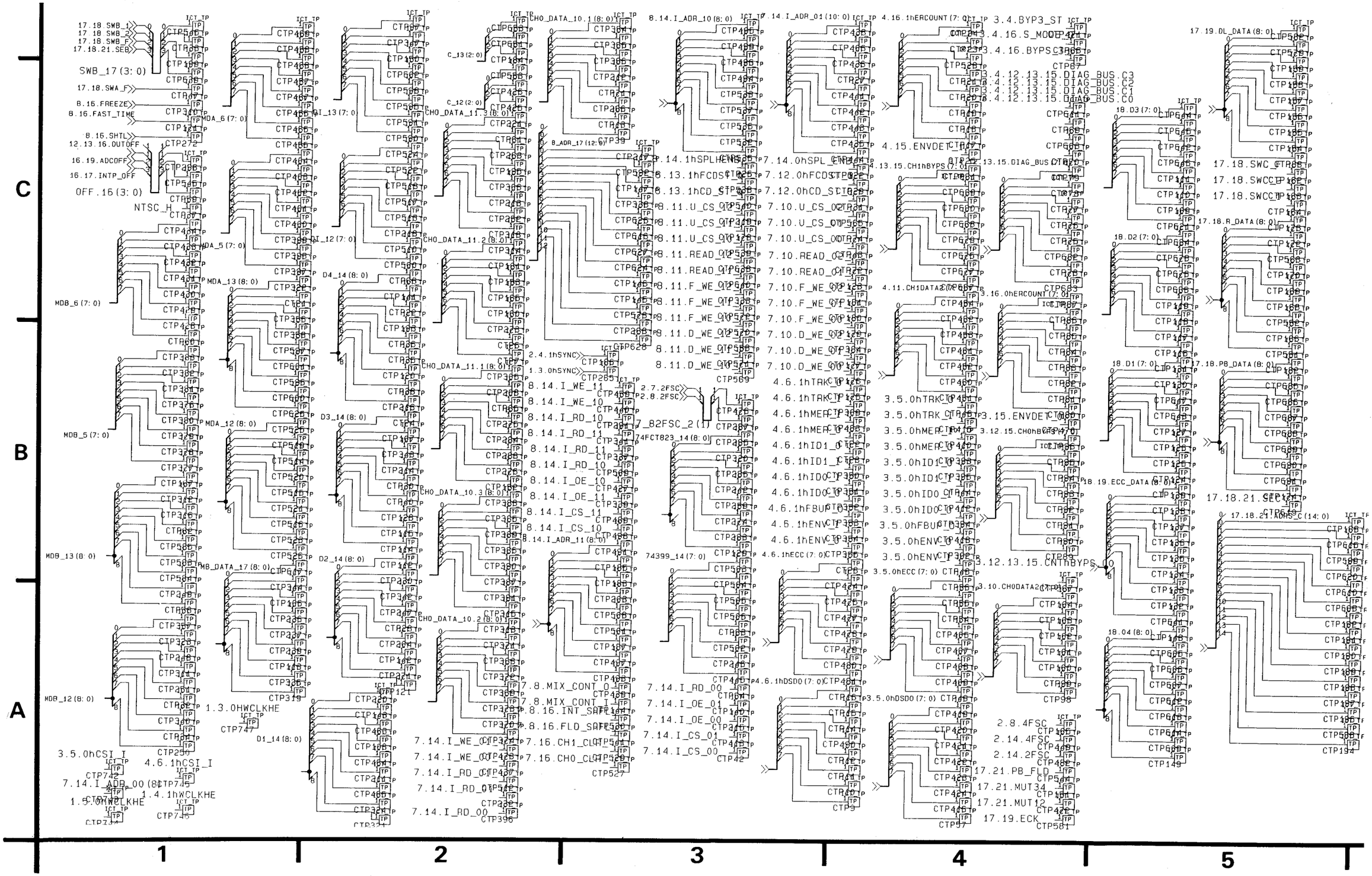

L3 VIDEO/AUDIO PB SCHEMATIC DIAGRAM (25/25)

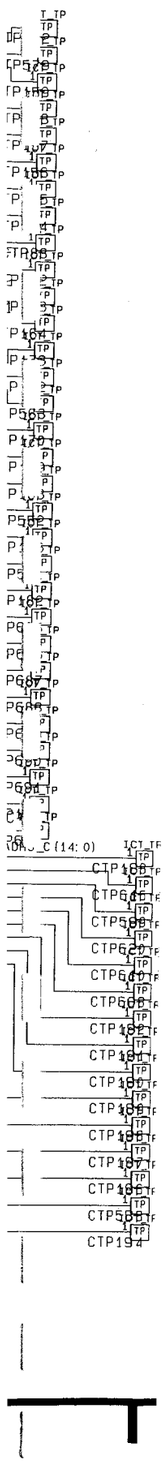

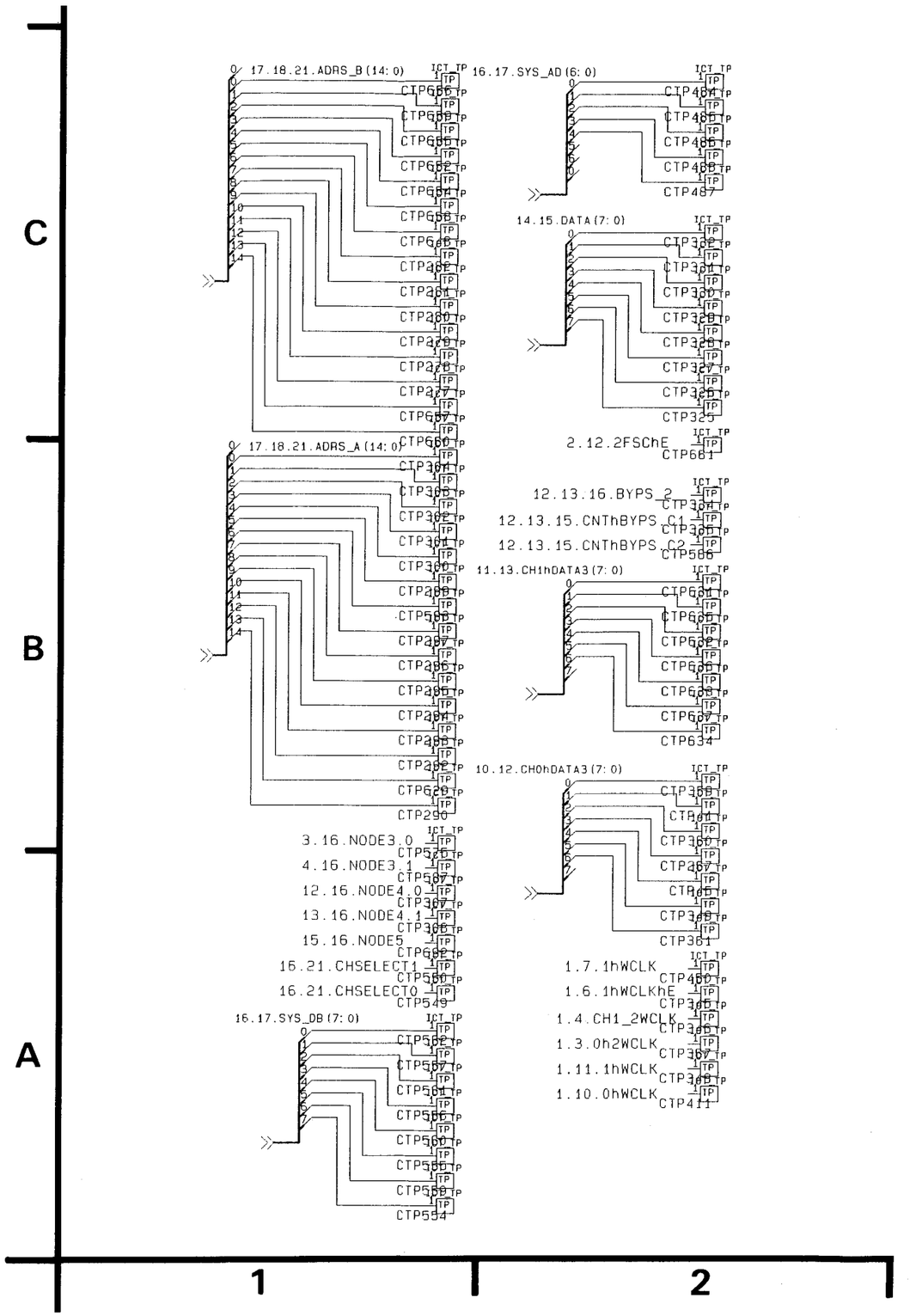

L4 VIDEO PROCESS (SYNC GEN 1) SCHEMATIC DIAGRAM (1/22)

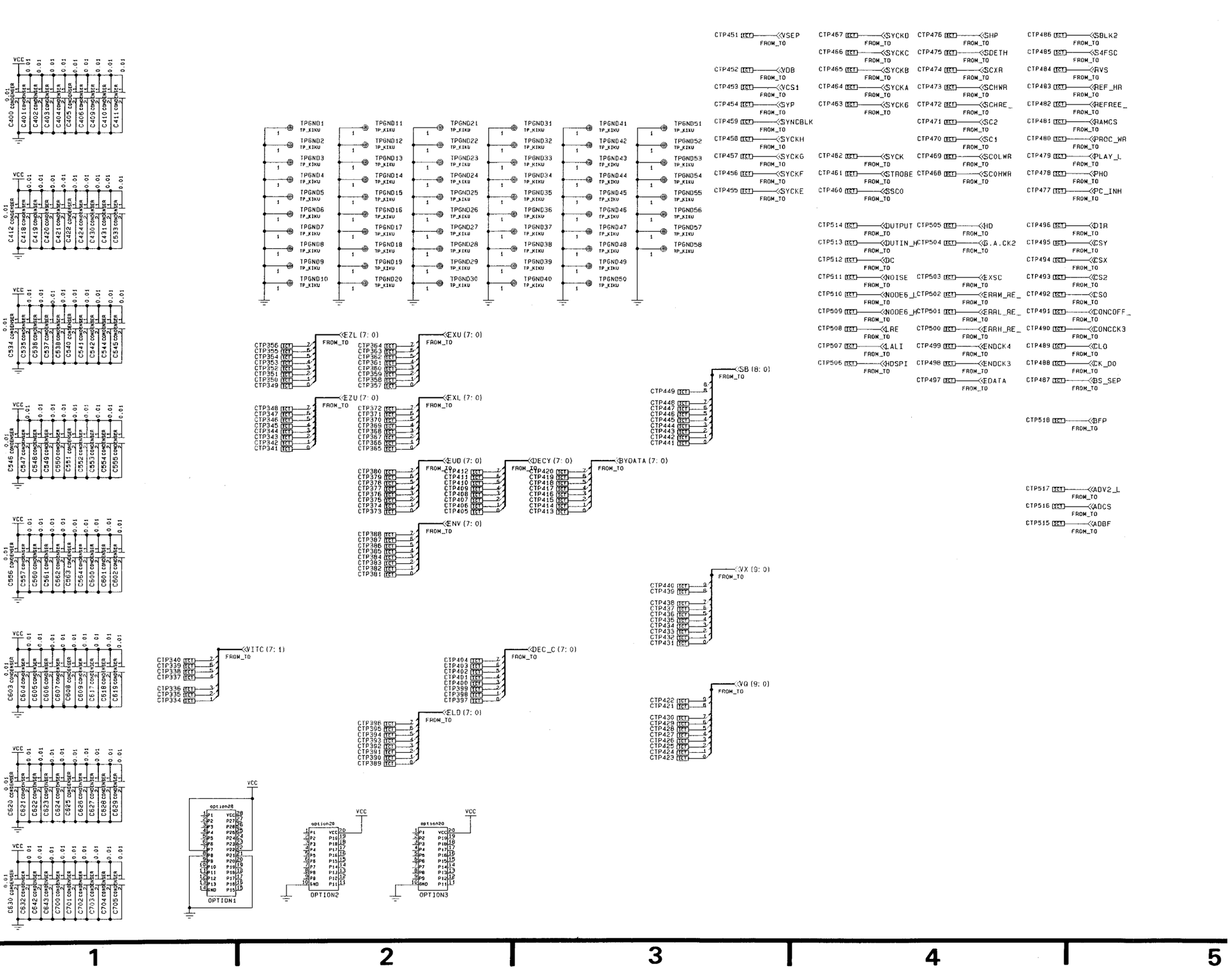

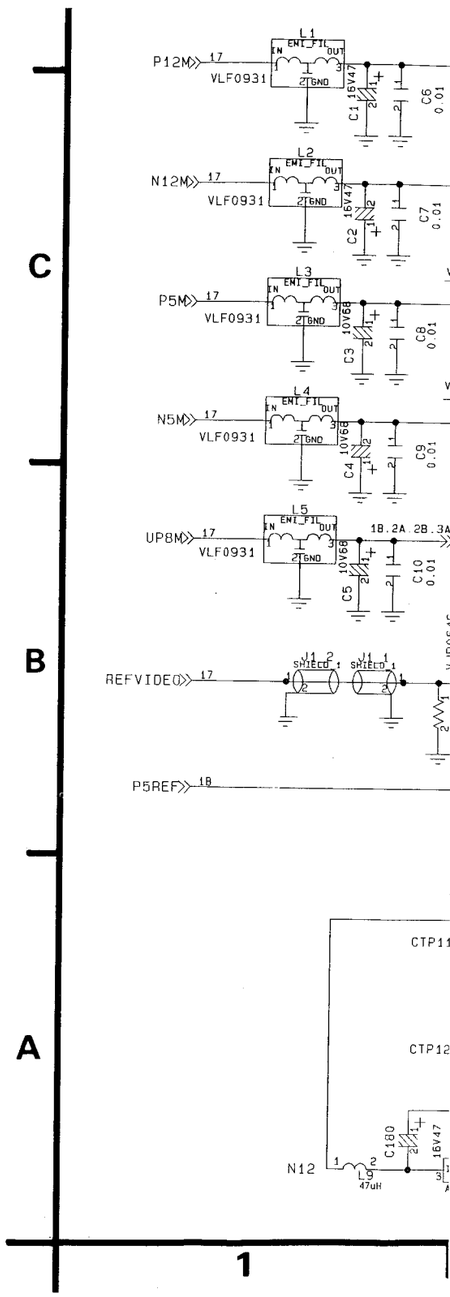

O PROCESS (SYNC GEN 1) SCHEMATIC DIAGRAM (1A/22)

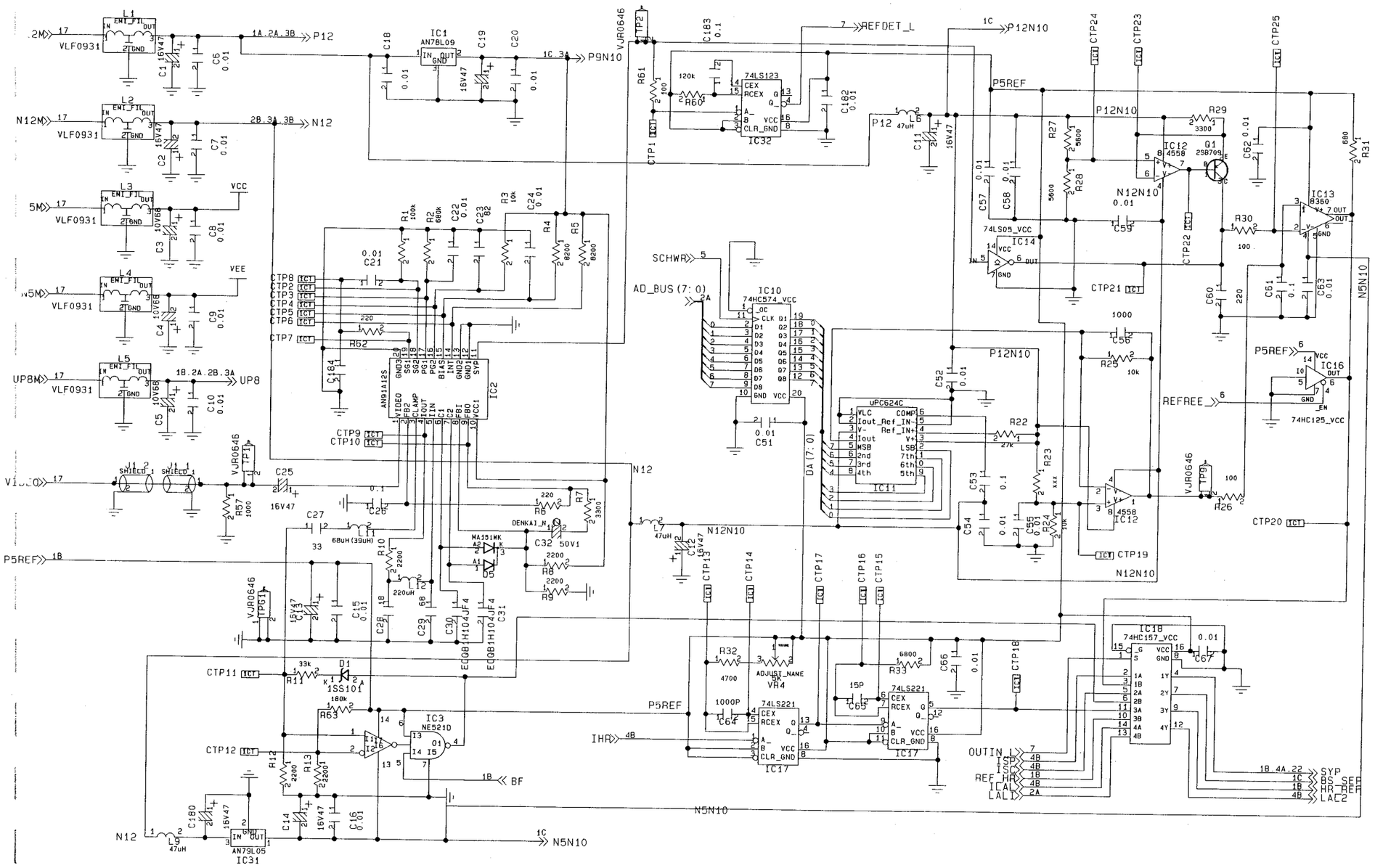

COMPARISON CHART BETWEEN
NTSC MODEL AND PAL MODEL
L4 VIDEO PROCESS P.C.B.

REF. NO.	NTSC	PAL
IC8030	VSI0948C	VSI0949D
IC8302	VSI0805C	VSI0804B
IC8303	VSI0807	VSI0806
IC8304	VSI0809A	VSI0808D
IC8319	VSI0960	VSI0954
IC8320	VSI0961	VSI0955
IC8321	VSI0944	VSI0956
IC8322	VSI0945	VSI0957
IC8323	VSI0946	VSI0958
IC8324	VSI0947	VSI0959
IC8414	VSI1086L	VSI1087L
IC8523	VSI0811A	VSI0810A
IC8524	VSI0813	VSI0812
IC8535	VSI0822A	VSI0821A
IC8546	VSI0824A	VSI0823A
IC8562	VSI0819	VSI0818A
IC8565	VSI0815A	VSI0814A
IC8593	VSI0990	VSI0988
IC8594	VSI0991	VSI0989
IC8595	VSI0999	VSI0998
IC8633	VSI0831	VSI0830
IC8634	VSI0833	VSI0832
IC8636	VSI0837	VSI0836
IC8984	VSI0841A	VSI0840A
IC8985	VSI0843A	VSI0842A
X8001	VSX0081	VSX0363
X8100	VSX0338	VSX0270
X8201	VSX0338	VSX0270
	VEP88071E	VEP88071F

L4 VIDEO PROCESS (SYNC GEN 1) SCHEMATIC DIAGRAM (1B/22)

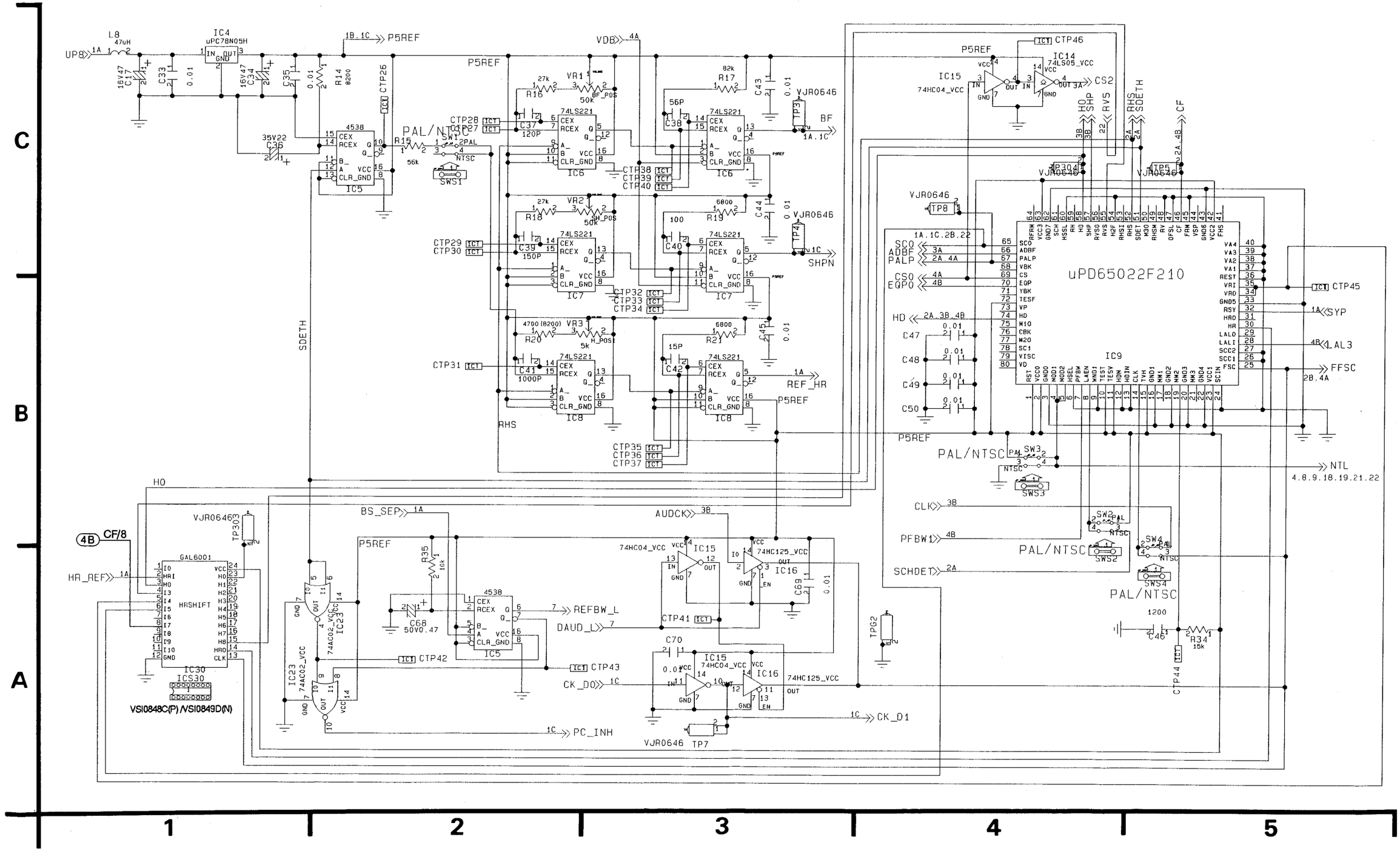

4—2—55

L4 VIDEO PROCESS (SYNC GEN 1) SCHEMATIC DIAGRAM (1C/22)

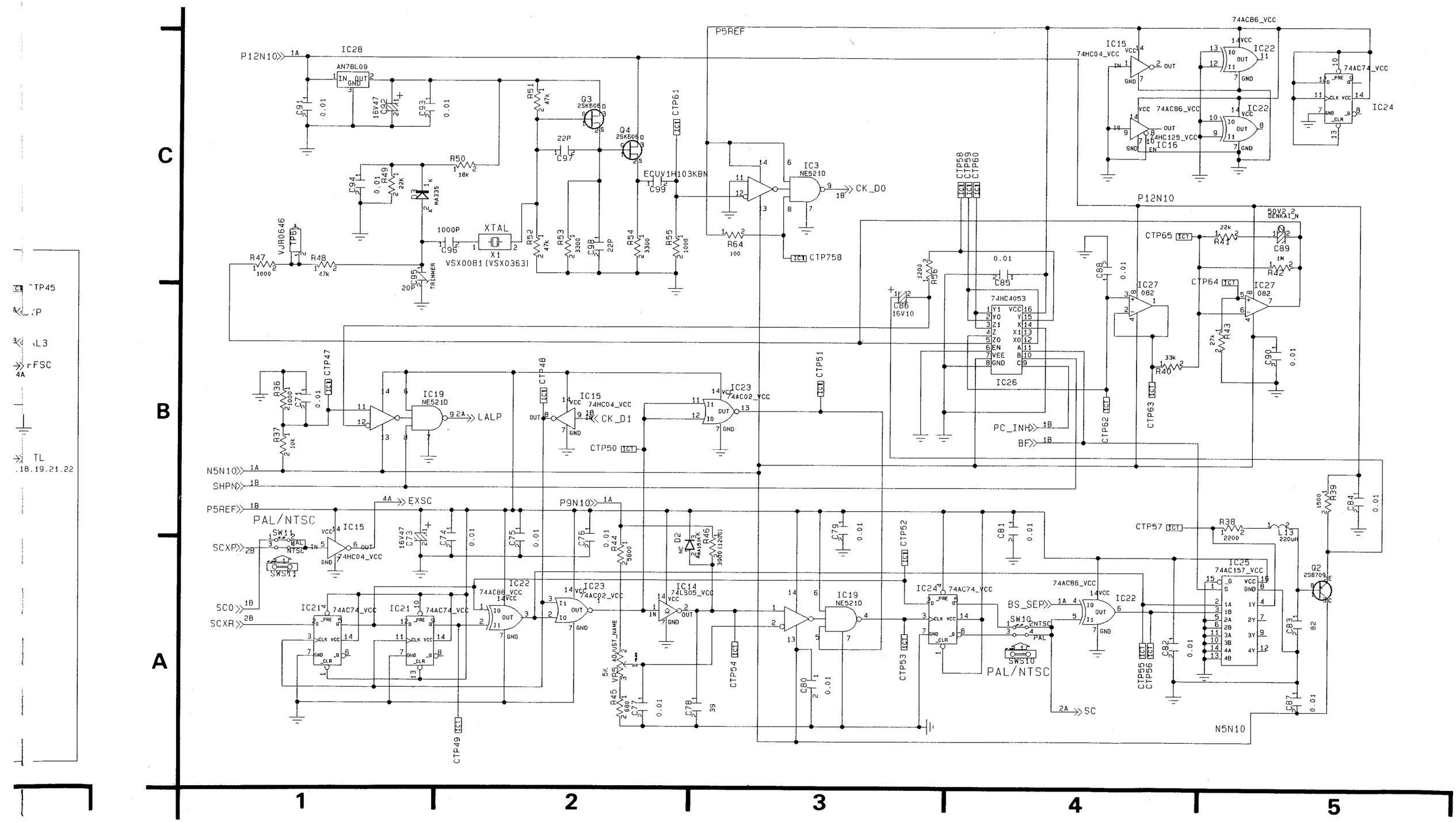

L4 VIDEO PROCESS (SYNC GEN 2) SCHEMATIC DIAGRAM (2A/22)

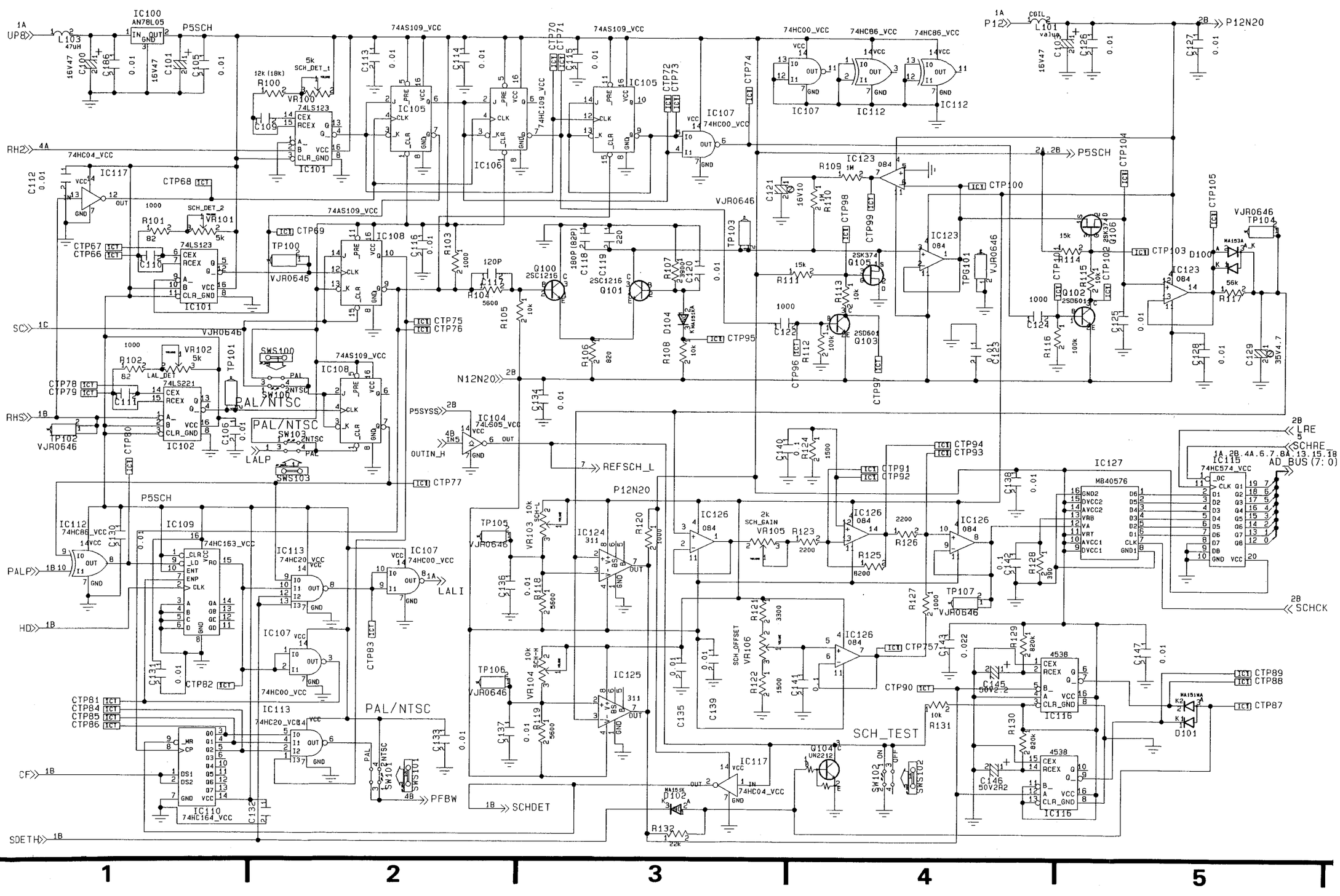

L4 VIDEO PROCESS (SYNC GEN 2) SCHEMATIC DIAGRAM (2B/22)

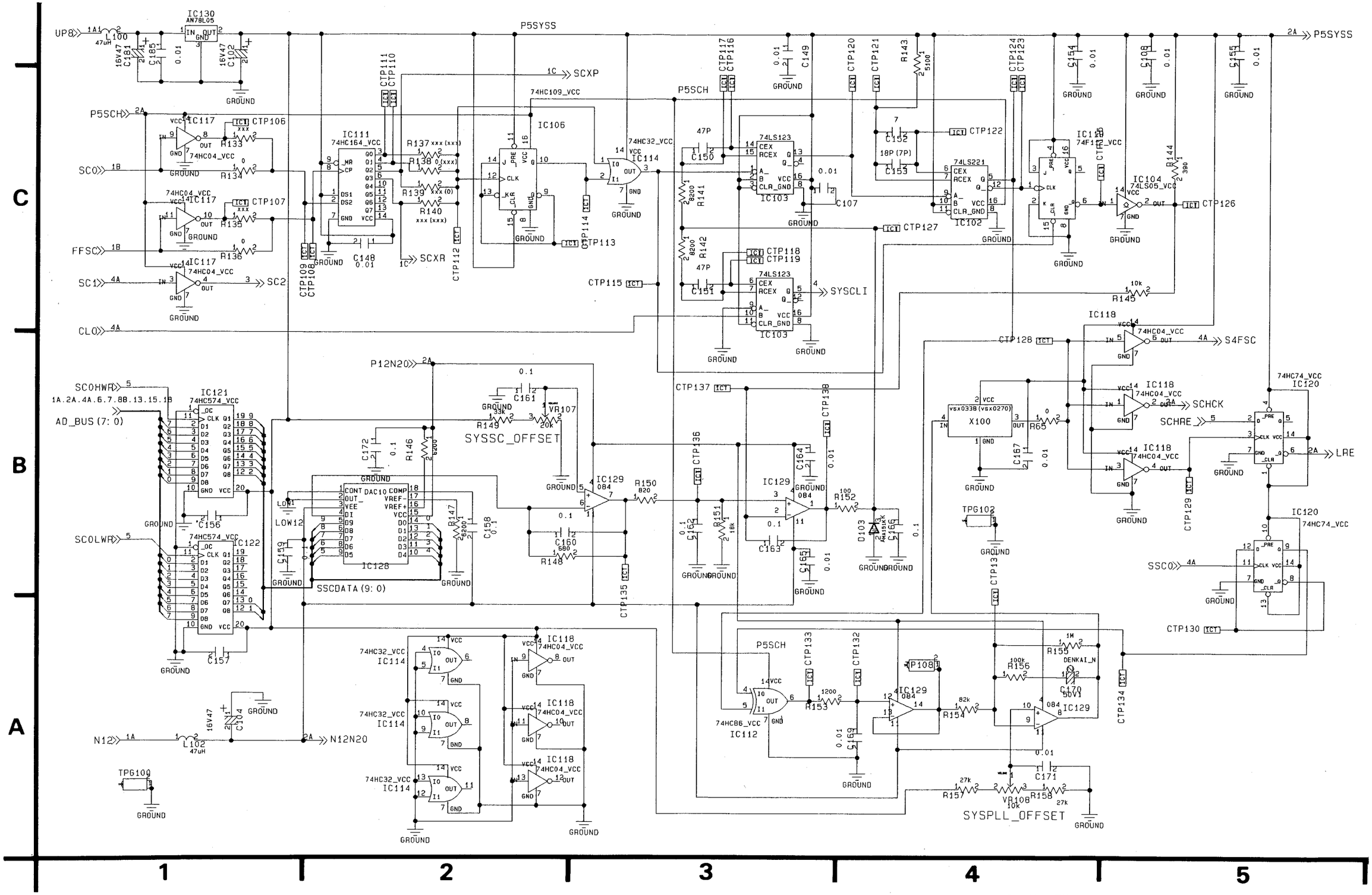

L4 VIDEO PROCESS (SYNC GEN 3) SCHEMATIC DIAGRAM (3A/22)

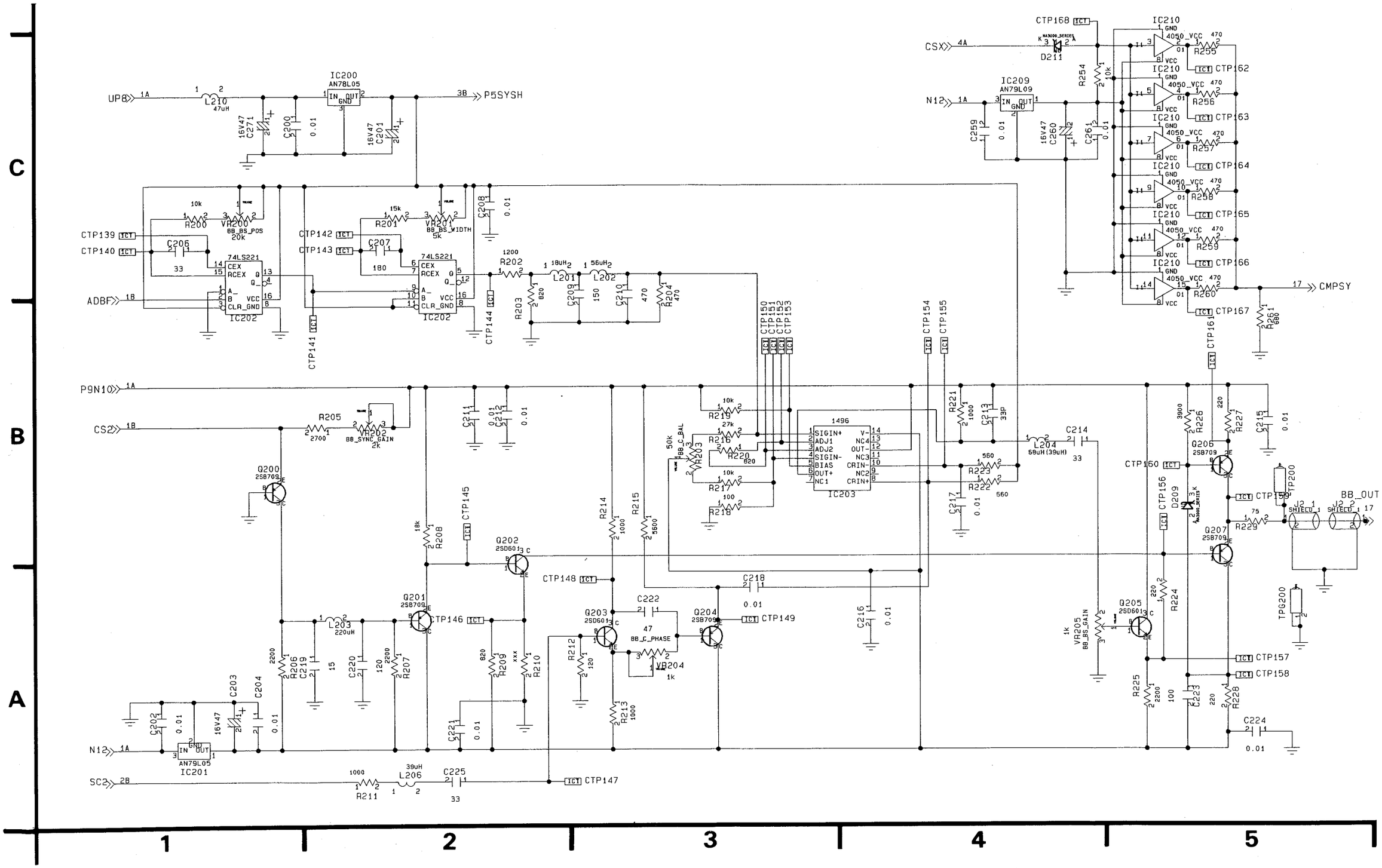

L4 VIDEO PROCESS (SYNC GEN 3) SCHEMATIC DIAGRAM (3B/22)

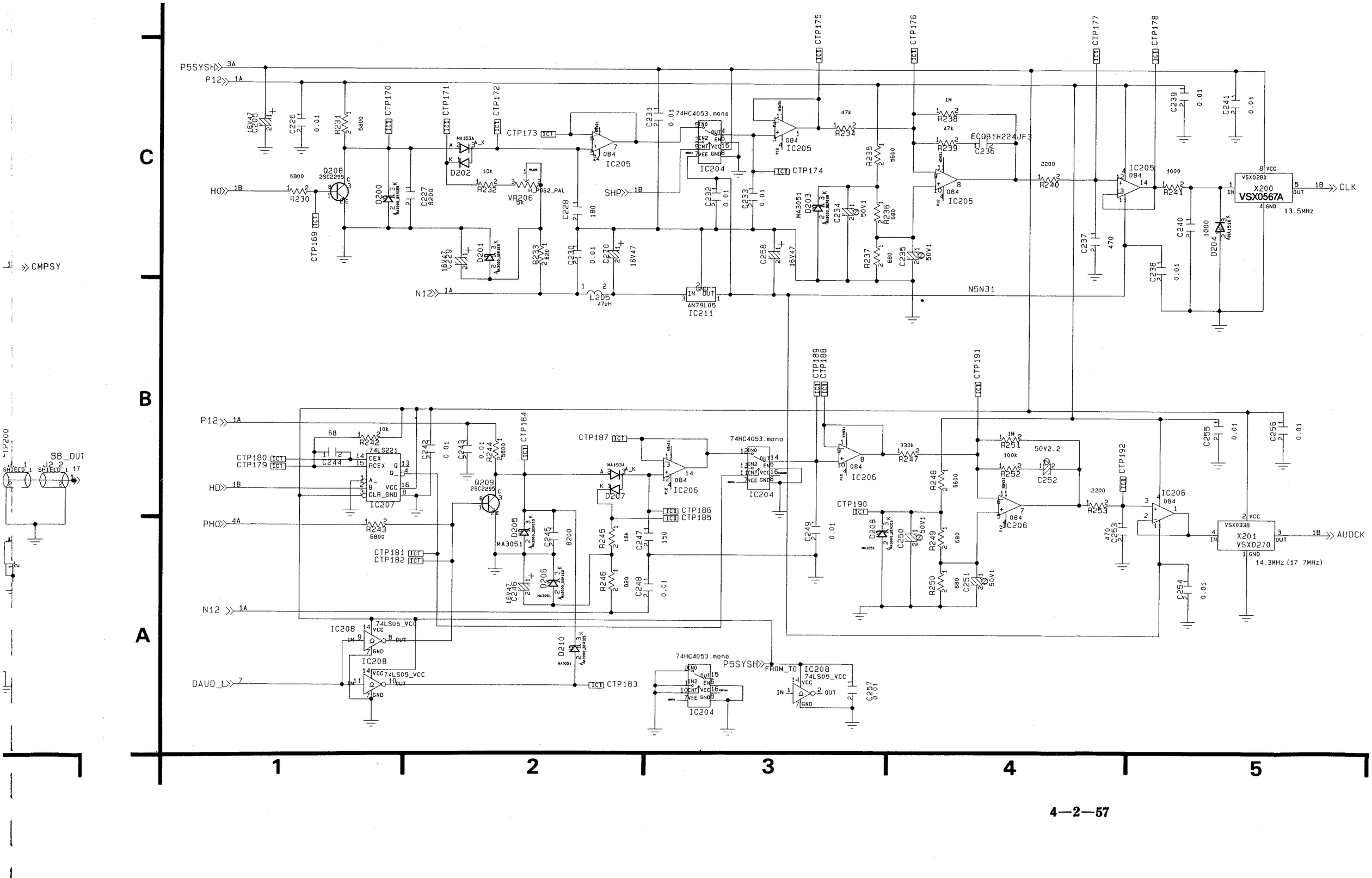

L4 VIDEO PROCESS (SYNC GEN 4) SCHEMATIC DIAGRAM (4A/22)

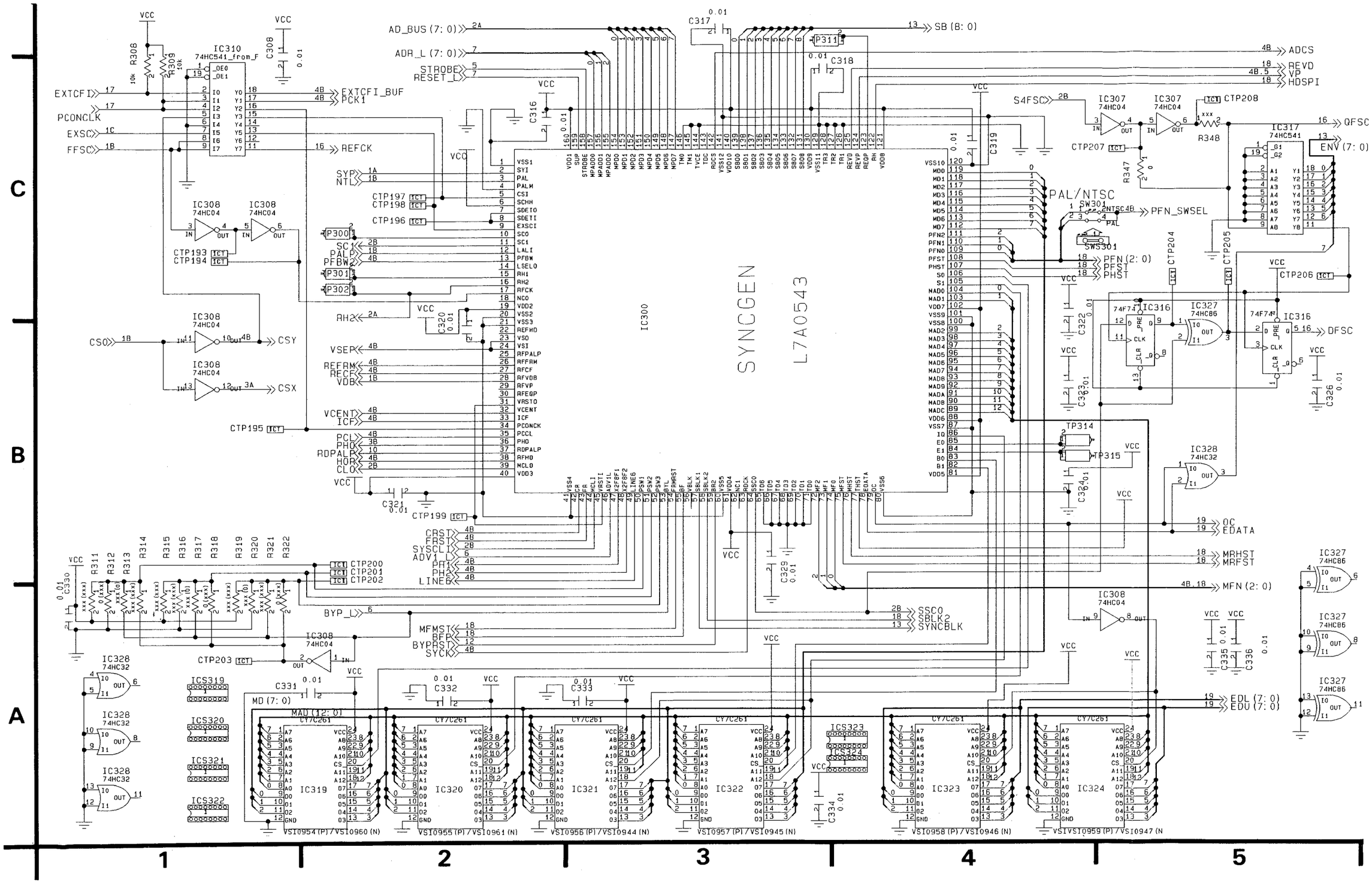

L4 VIDEO PROCESS (SYNC GEN 4) SCHEMATIC DIAGRAM (4B/22)

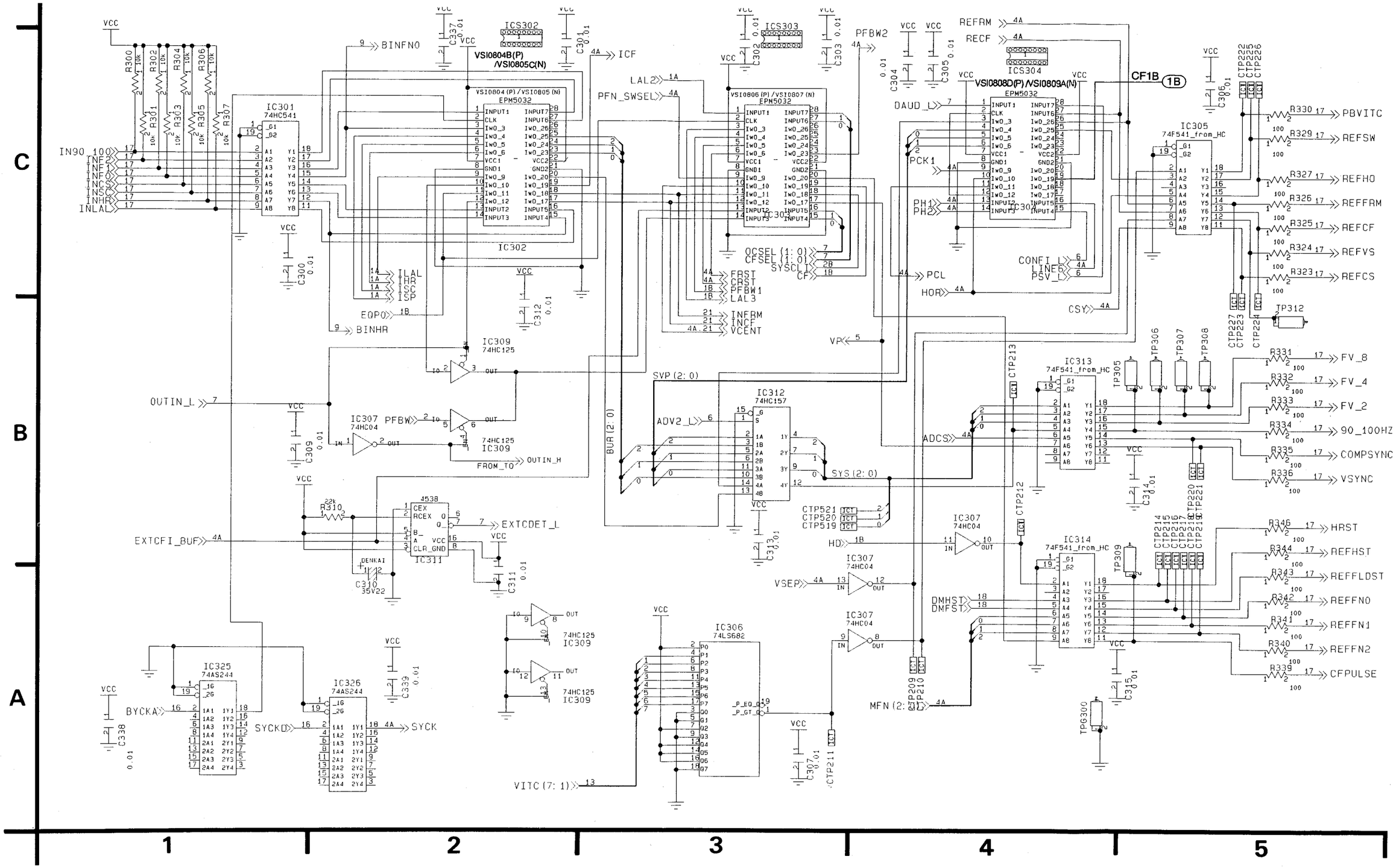

L4 VIDEO PROCESS (VIDEO CPU 1) SCHEMATIC DIAGRAM (5/22)

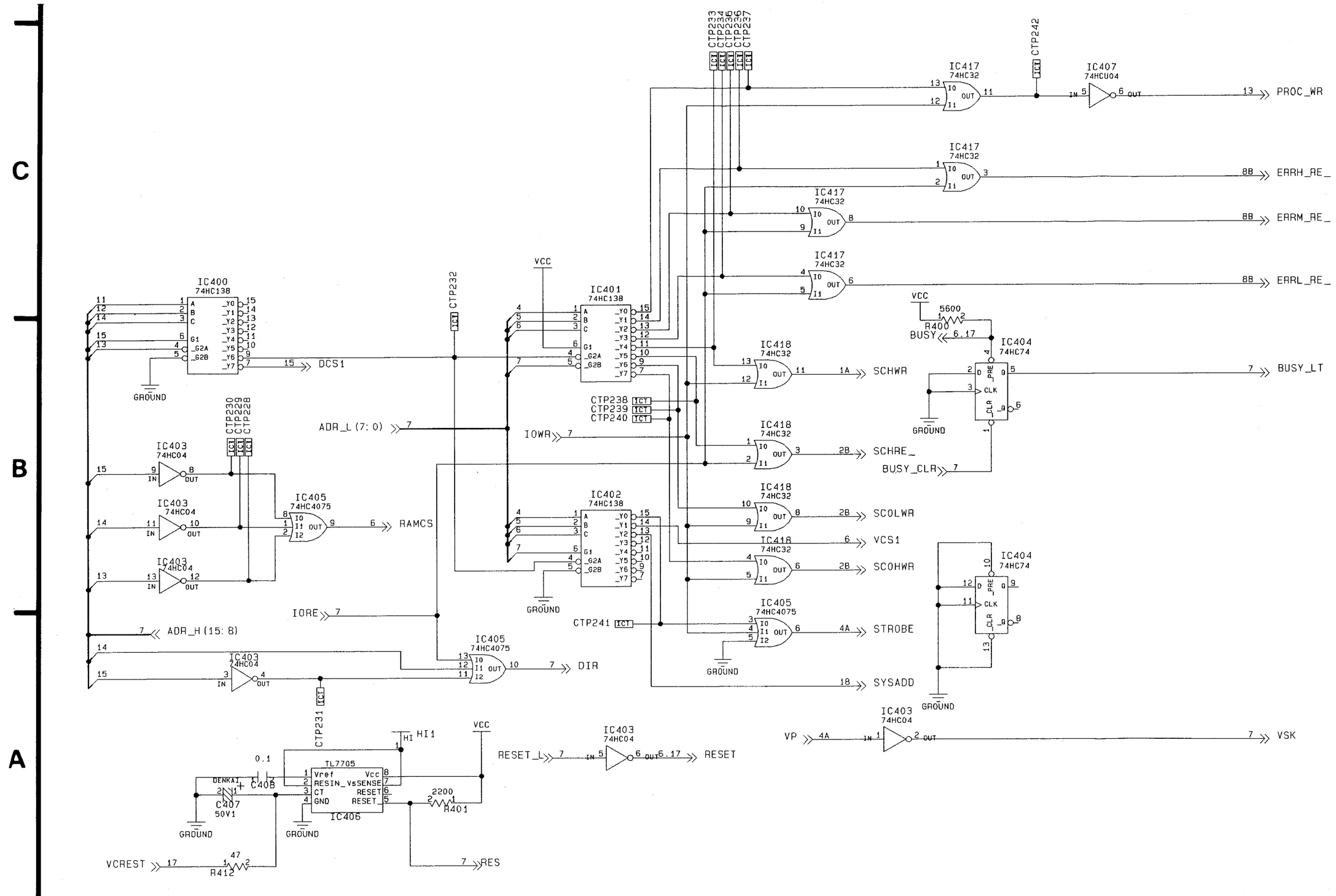

L4 VIDEO PROCESS (VIDEO CPU 2) SCHEMATIC DIAGRAM (6/22)

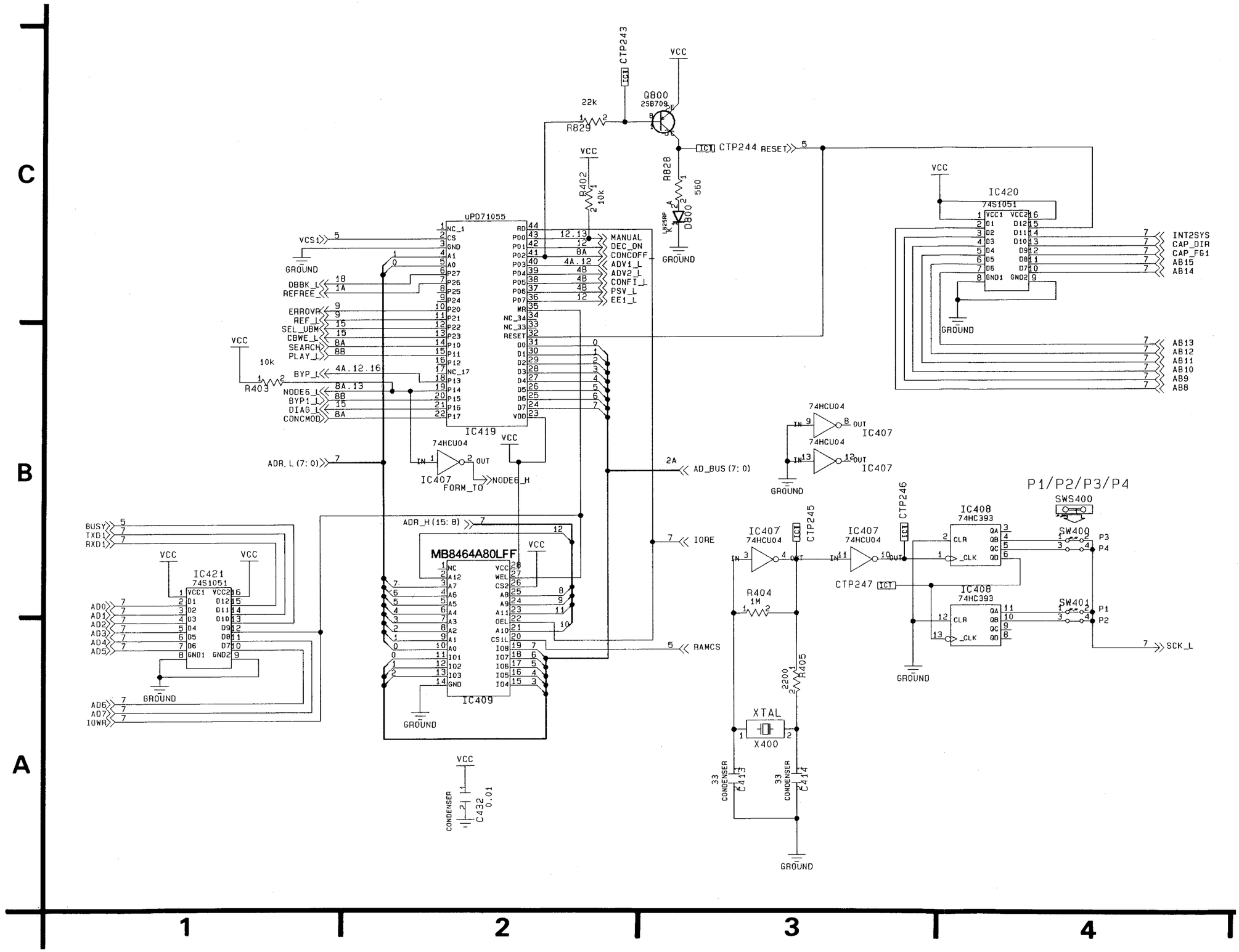

L4 VIDEO PROCESS (VIDEO CPU 3) SCHEMATIC DIAGRAM (7/22)

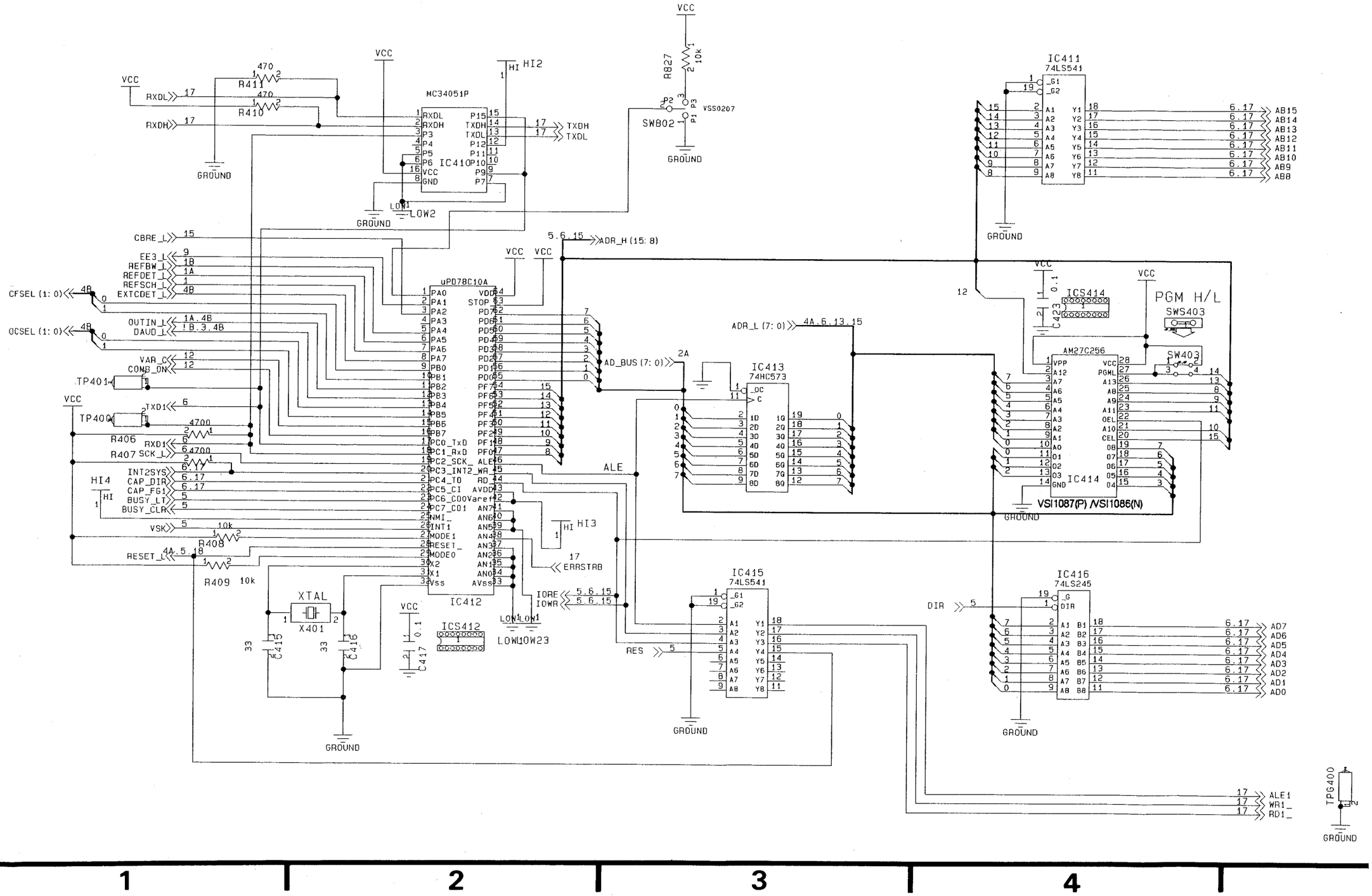

L4 VIDEO PROCESS (CONC) SCHEMATIC DIAGRAM (8A/22)

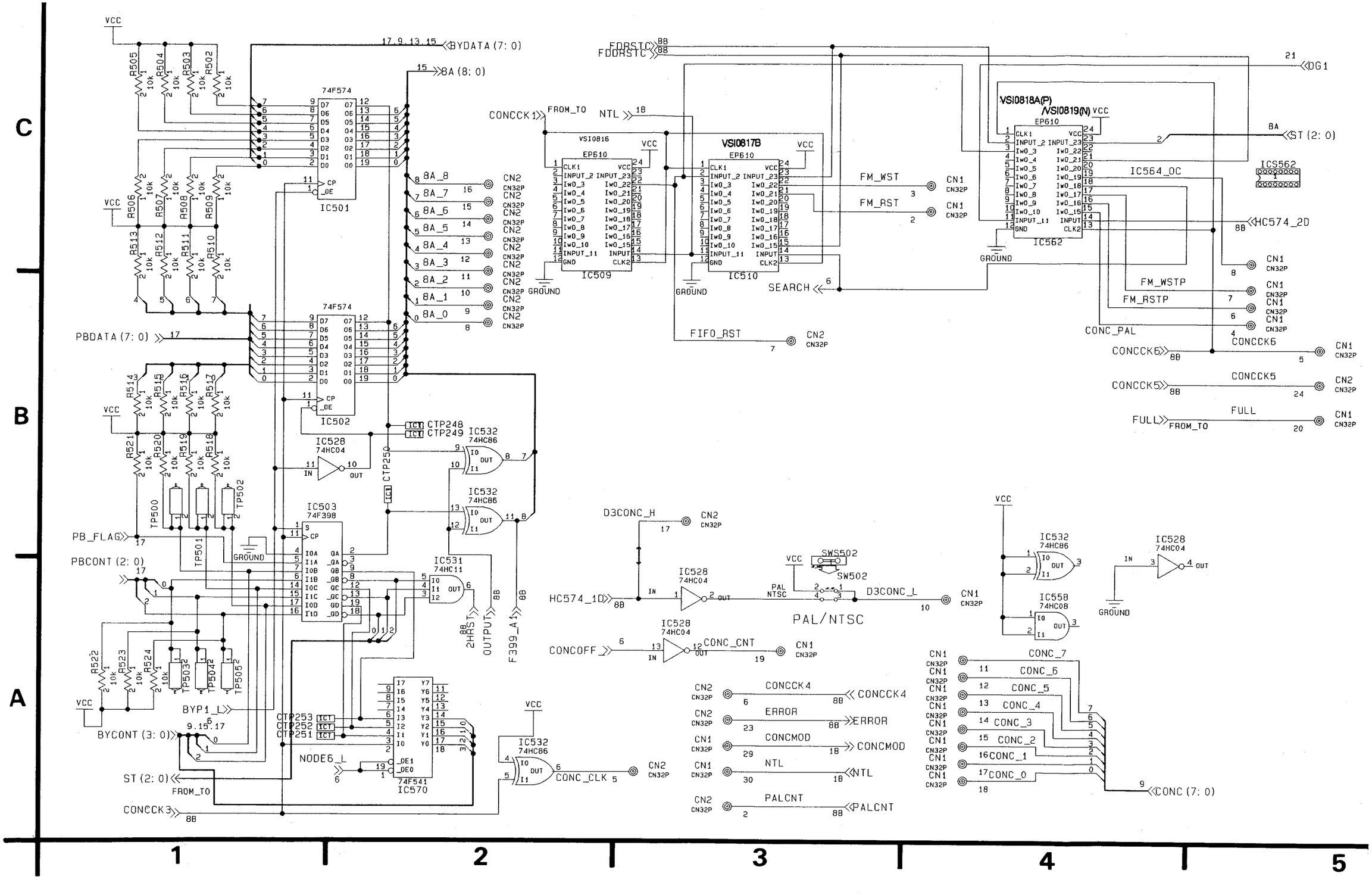

L4 VIDEO PROCESS (CONC) SCHEMATIC DIAGRAM (8B/22)

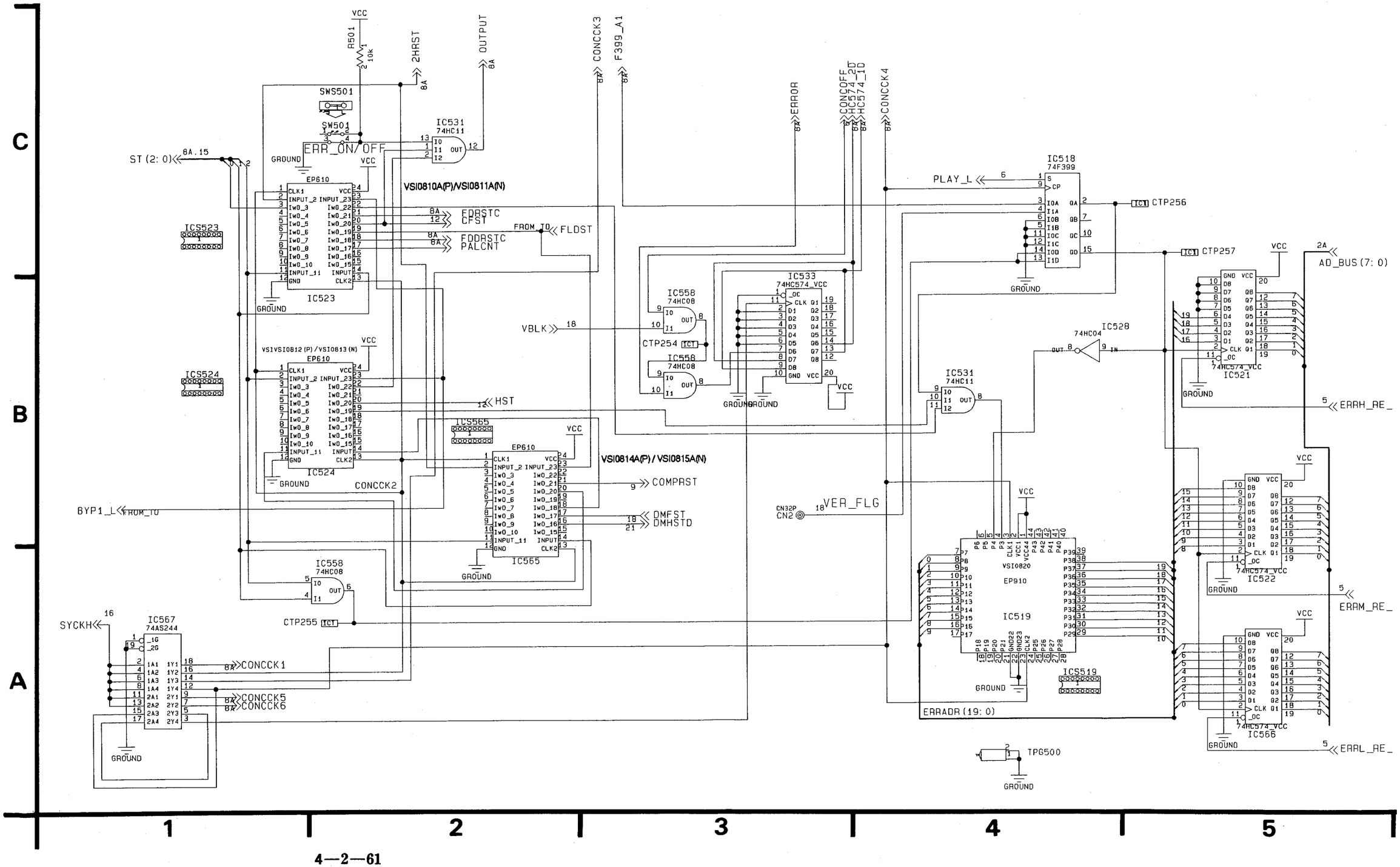

L4 VIDEO PROCESS (TBC) SCHEMATIC DIAGRAM (9/22)

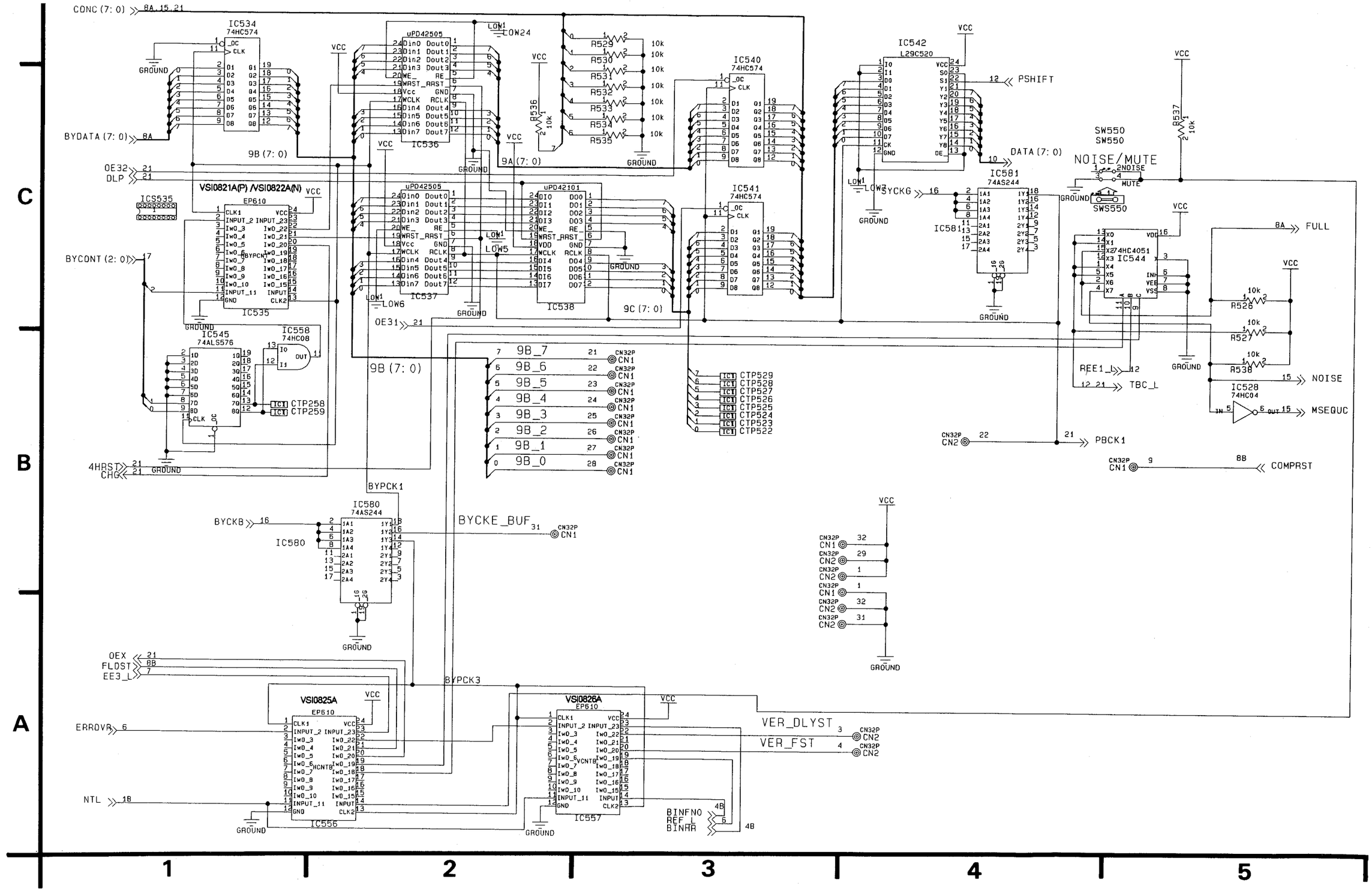

L4 VIDEO PROCESS (DEC 1) SCHEMATIC DIAGRAM (10/22)

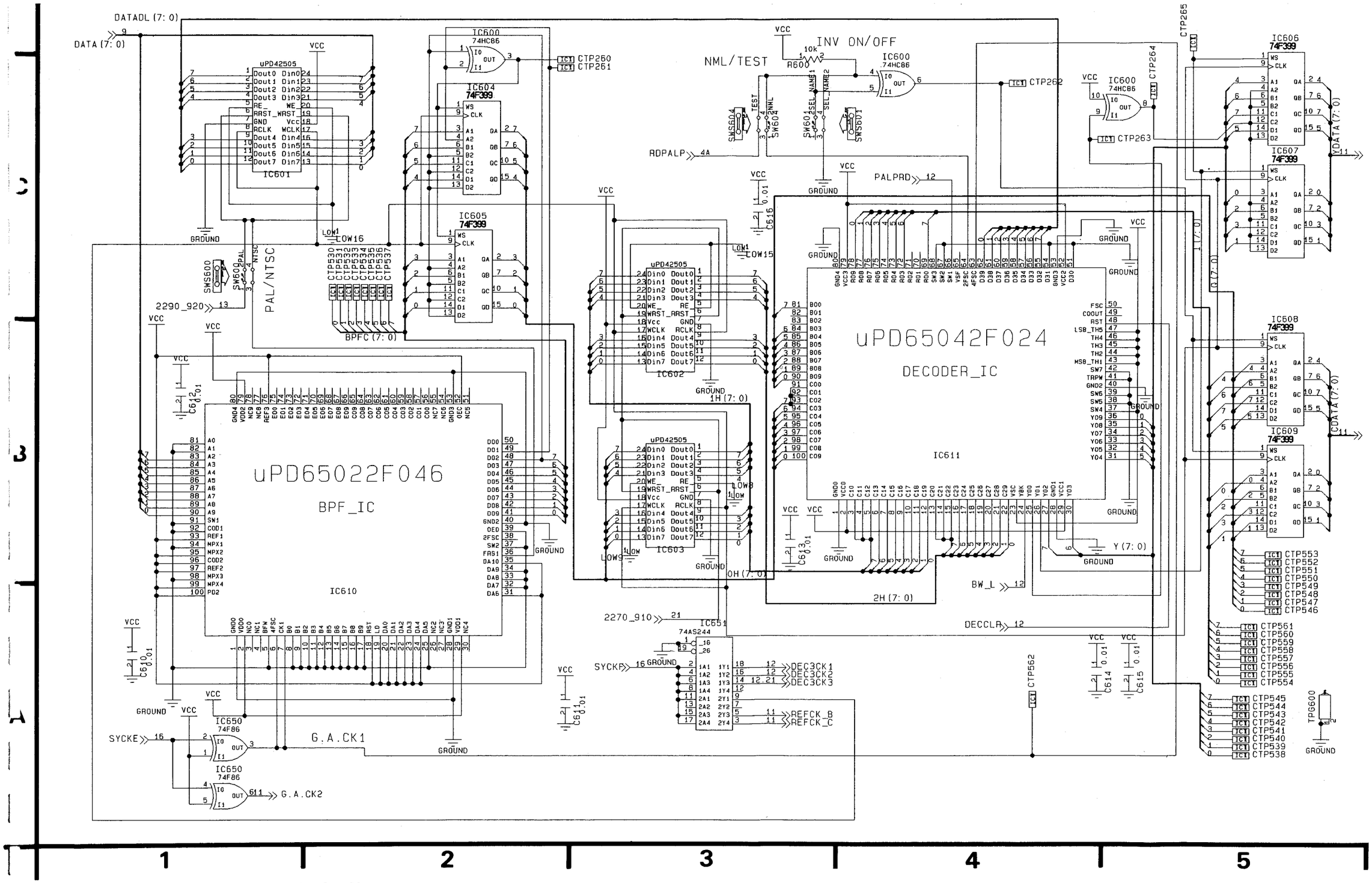

4—2—62

L4 VIDEO PROCESS (DEC 2) SCHEMATIC DIAGRAM (11/22)

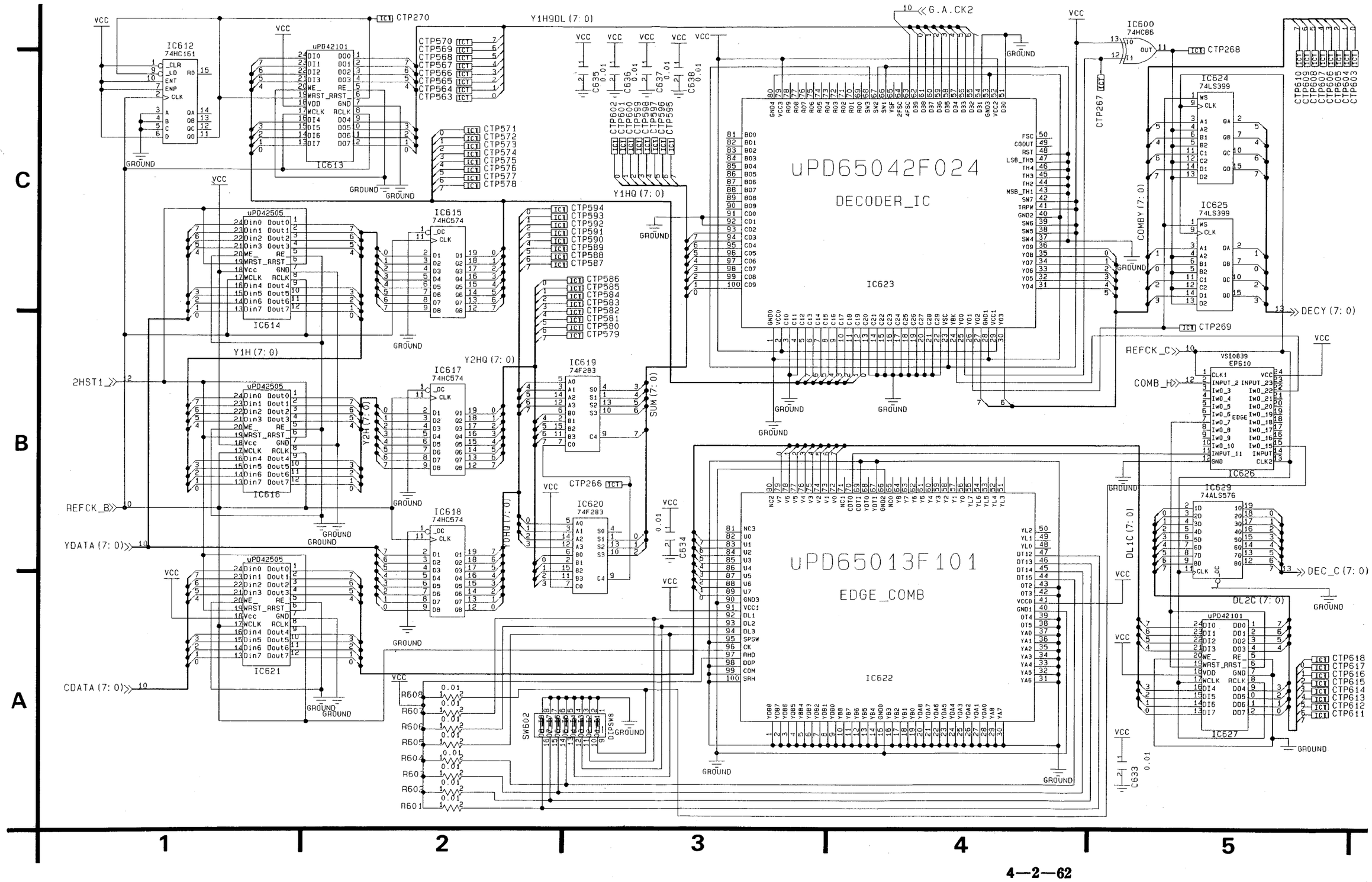

L4 VIDEO PROCESS (DEC 3) SCHEMATIC DIAGRAM (12/22)

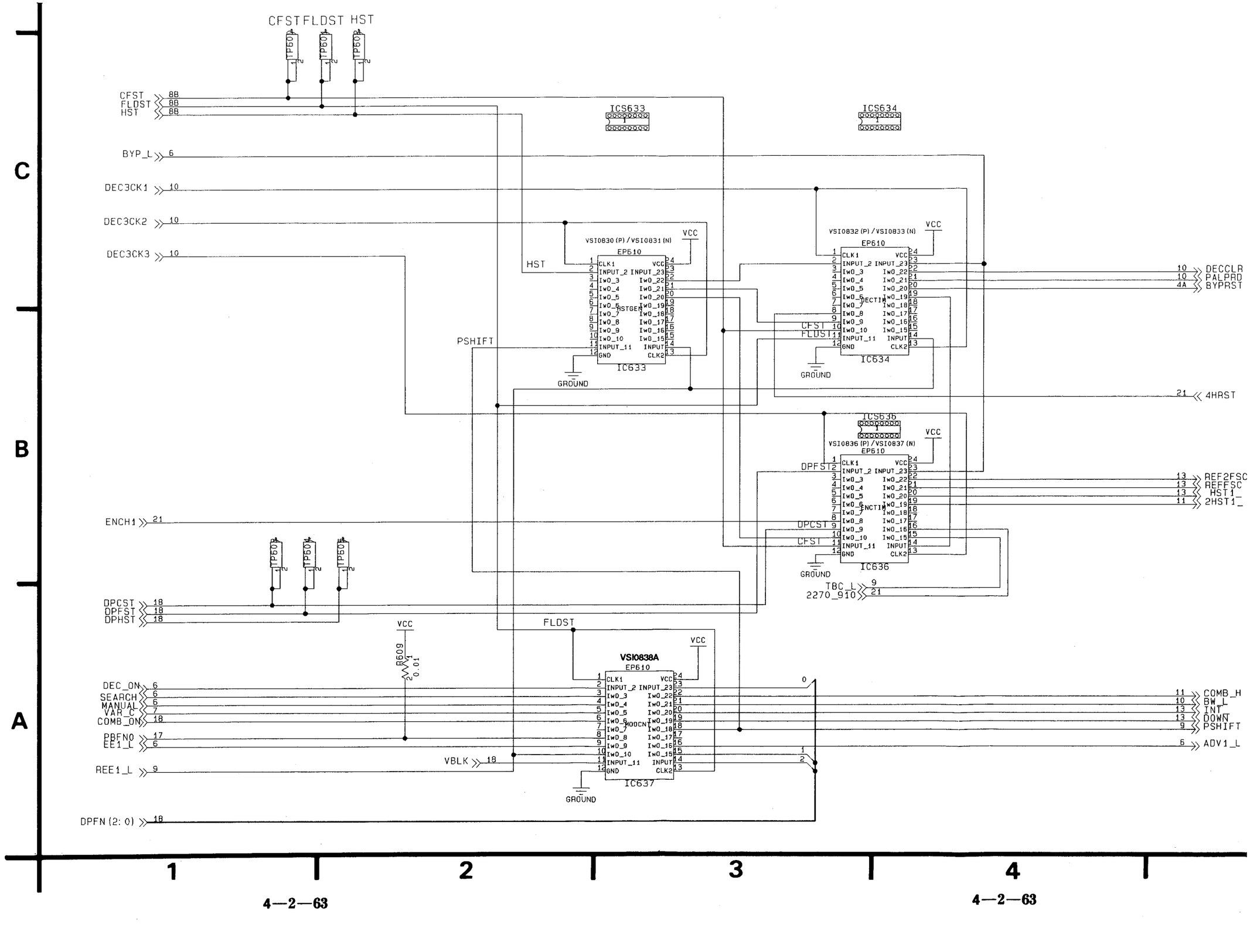

4—2—63

4—2—63

L4 VIDEO PROCESS (OUT PROC) SCHEMATIC DIAGRAM (13/22)

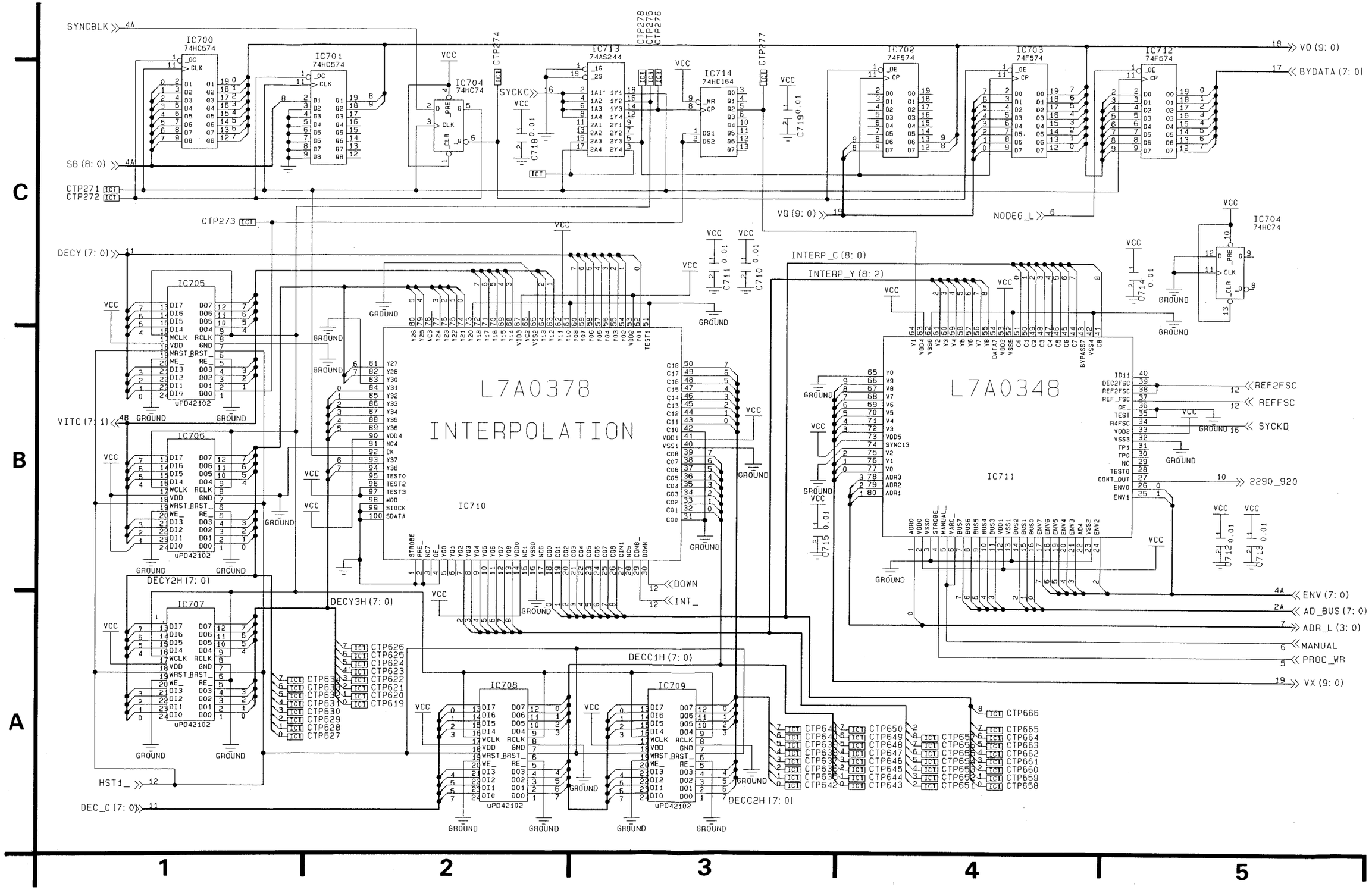

4—2—64

L4 VIDEO PROCESS (D IF) SCHEMATIC DIAGRAM (14/22)

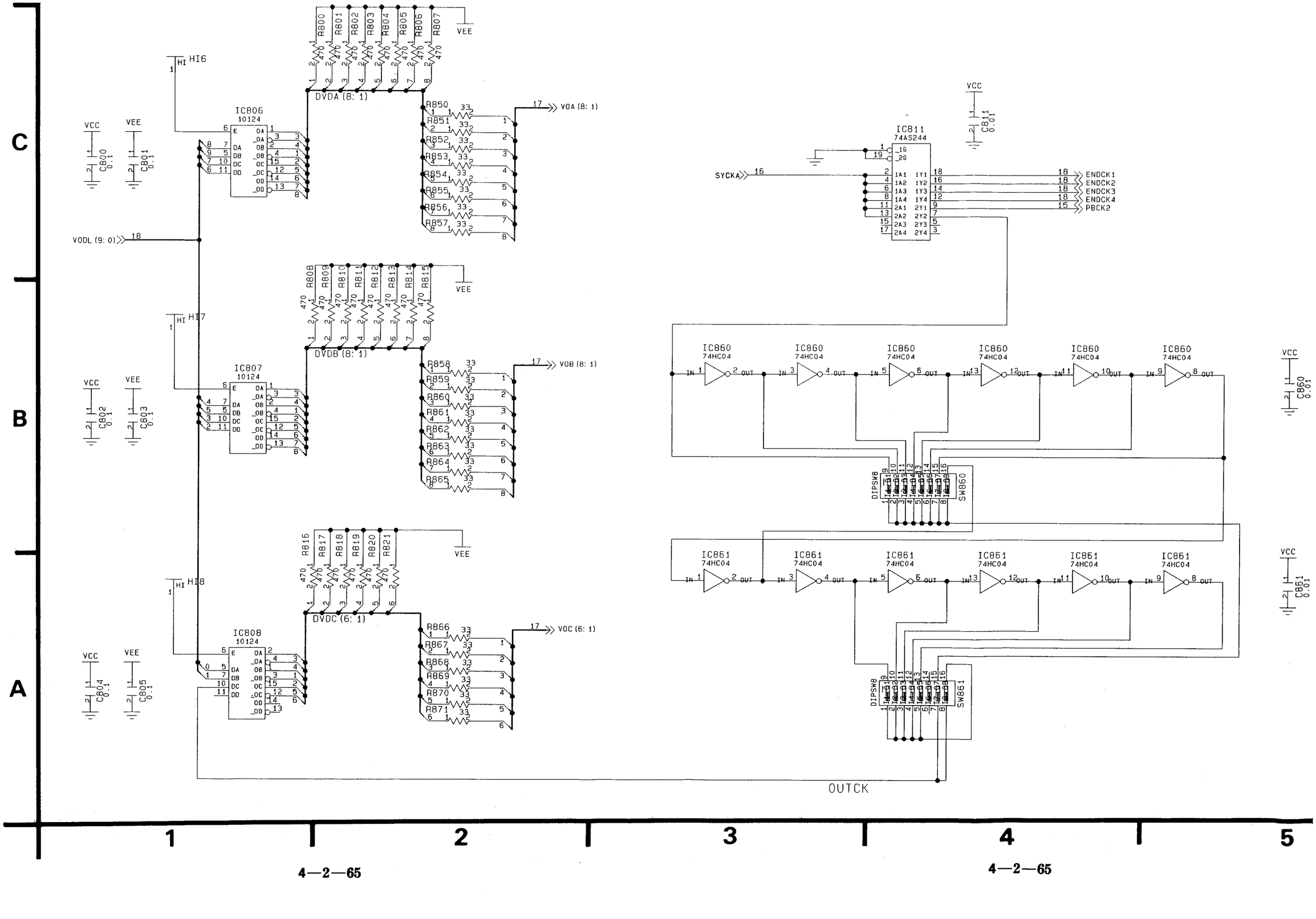

L4 VIDEO PROCESS (DIAG I/O) SCHEMATIC DIAGRAM (15/22)

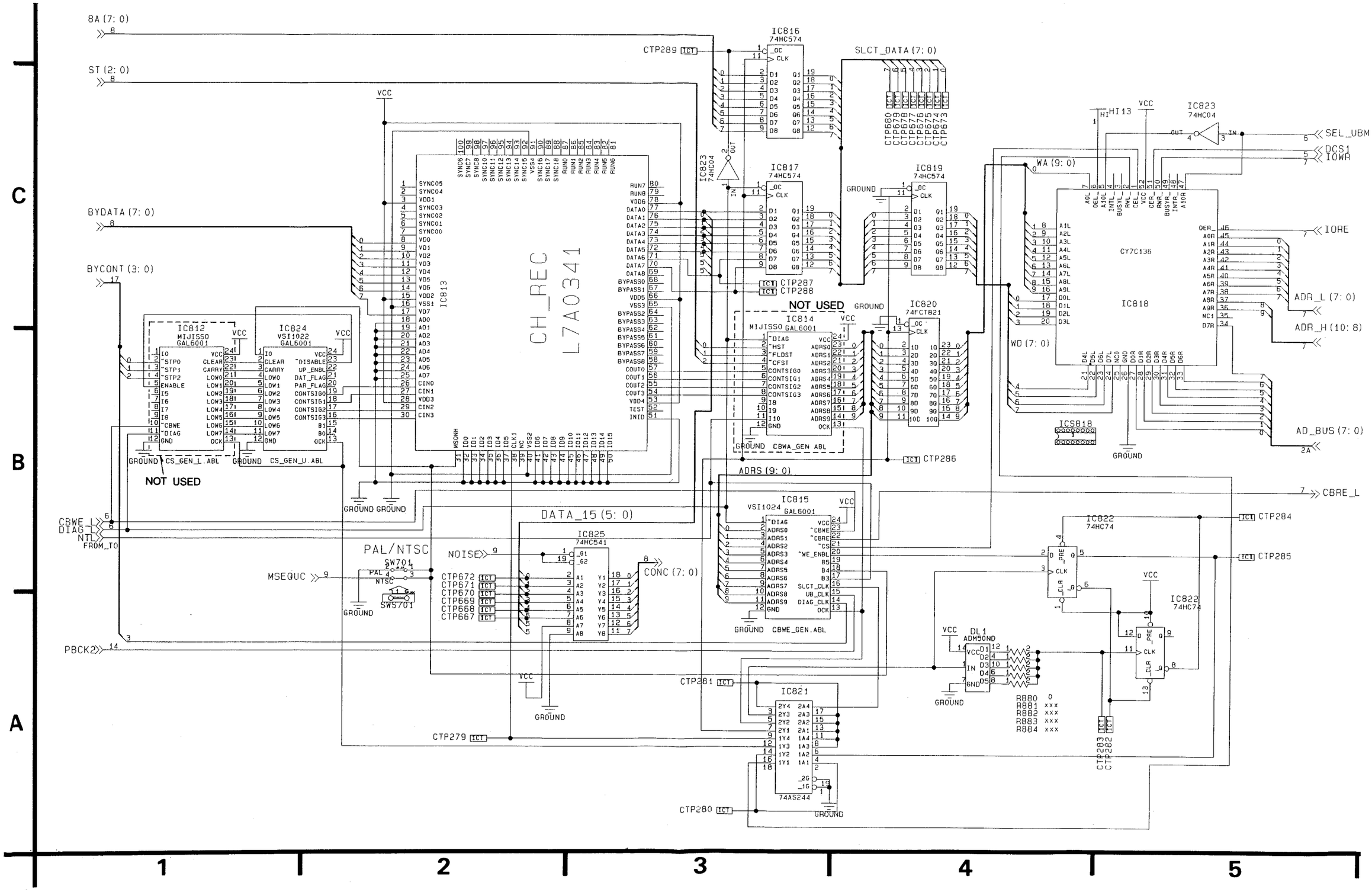

4—2—66

4—2—66

L4 VIDEO PROCESS (CLK BUF) SCHEMATIC DIAGRAM (16/22)

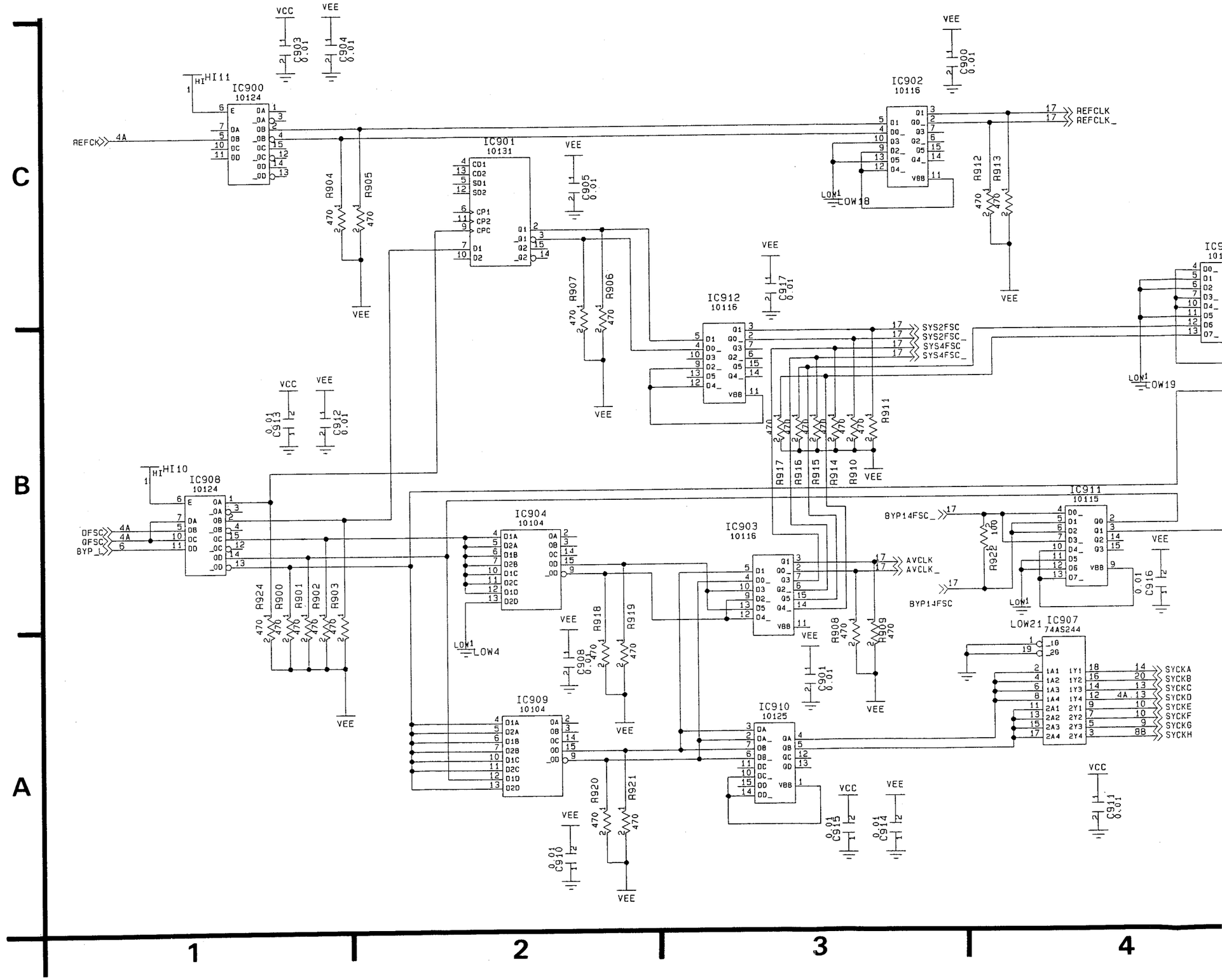

F) SCHEMATIC DIAGRAM (16/22)

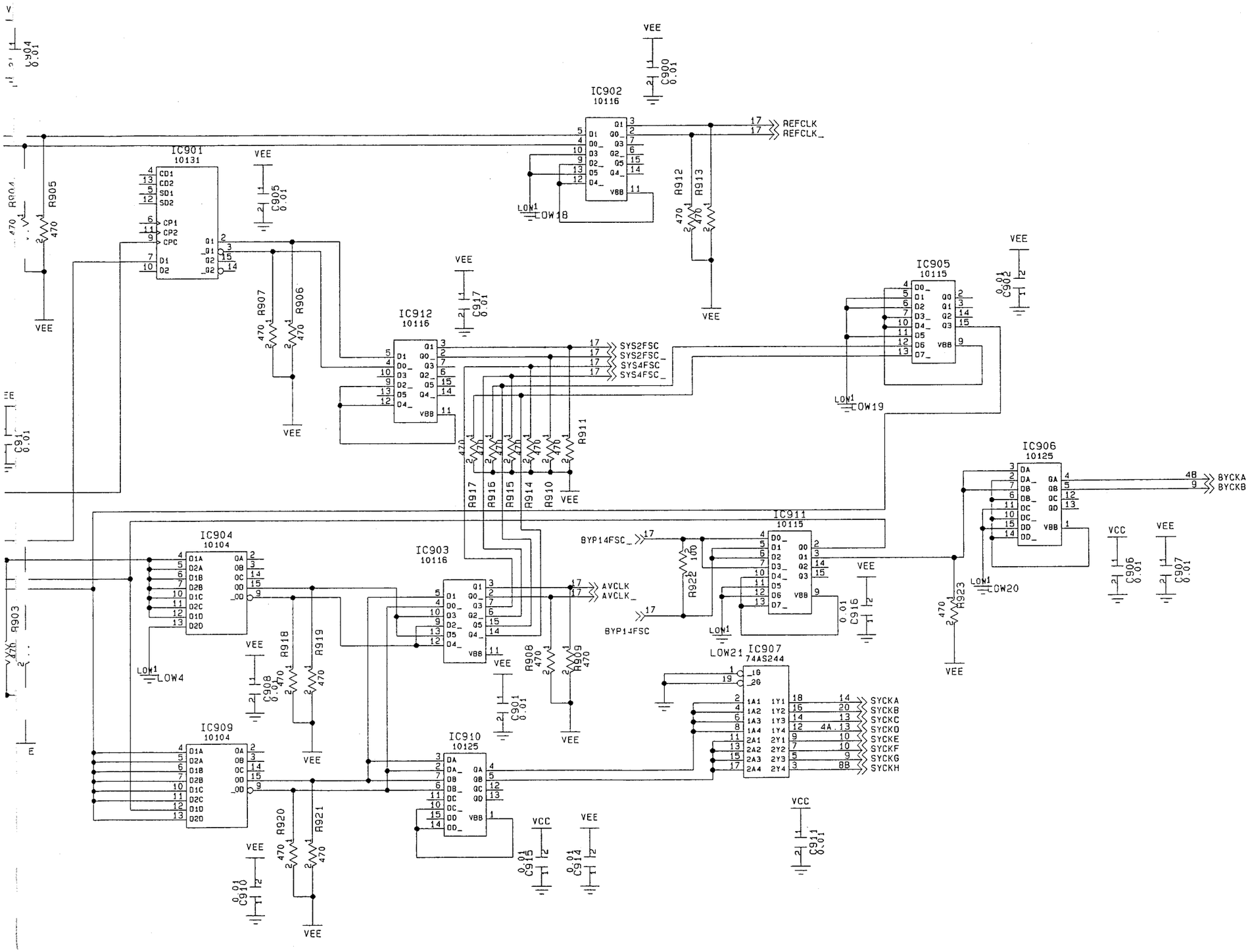

L4 VIDEO PROCESS (CONNECTOR) SCHEMATIC DIAGRAM (17/22)

P007	A	L 4 FROM / TO			
1	GND (A)				
2	+12V (A)				
3	-12V (A)				
4	GND (A)				
5	+8V (un)				
6	-8V (un)				
7	INCOM HR	P003-7A			
8	INCOM FN0	P003-8A			
9	BYP1 4FSC	P003-9A			
10	BYP1 4FSC	P003-10A			
11	REF HD	P003-11A			
12	REF CS	P003-12A			
13	H RST	P003-13A			
14	INCOM CS	P003-14A			
15	FV/2	P024-7B	P004-19B		
16	30HZ/100HZ	P024-8B			
17	REF REC SW	P004-5C			
18	SPI HD	P019-18A			
19	PB COMP SYNC	P019-15A			
20	REF VIDEO IN	P029-1			
21	REF VIDEO IN GND	P029-2			
22	BLACK BURST	P029-3			
23	BLACK BURST GND	P029-4			
24	AV AB 13	P024-16A	P001-24A	P003-24A	P005-24A
25	AV AB 10	P024-19A	P001-25A	P003-25A	P005-25A
26	AV AD 7	P024-23A	P001-26A	P003-26A	P005-26A
27	AV AD 4	P024-26A	P001-27A	P003-27A	P005-27A
28	AV AD 1	P024-29A	P001-28A	P003-28A	P005-28A
29	AV RD	P024-12A	P001-29A	P003-29A	P005-29A
30	AV SYS INT	P024-13A			
31	AV BUSY	P024-10A			
32	GND (D)				

P007	B	L 4 FROM / TO			
1	GND (A)				
2					
3					
4					
5					
6					
7	INCOM REC SW	P003-7B			
8	INCOM FN 1	P003-8B			
9	PCON CLK (4.5M)	P003-9B	P005-13B		
10	PCON CLK GND	P003-10B	P005-14B		
11	REF FRM	P003-11B			
12	REF VS	P003-12B			
13					
14	INCOM LALT	P003-14B			
15	FV/4	P024-6B			
16	CAP FG1	P019-19A			
17					
18	SPI VD	P019-17A			
19	PB VITC	P019-16A			
20	EXT CF IN	P029-5	P004-9C		
21	EXT CF IN GND	P029-6			
22	CF PULSE	P029-7			
23	CF PULSE GND	P029-8			
24	AV AB 14	P024-15A	P001-24B	P003-24B	P005-24B
25	AV AB 11	P024-18A	P001-25B	P003-25B	P005-25B
26	AV AB 8	P024-21A	P001-26B	P003-26B	P005-26B
27	AV AD 5	P024-25A	P001-27B	P003-27B	P005-27B
28	AV AD 2	P024-28A	P001-28B	P003-28B	P005-28B
29	AV ALE	P024-22A	P001-29B	P003-29B	P005-29B
30	AV RESET	P024-9A	P001-30B	P003-30B	P005-30B
31	VCP RESET	P019-5A			
32	GND (A)				

P007	C	L 4 FROM / TO			
1	GND (A)				
2					
3					
4					
5					
6					
7					
8	INCOM FN2	P003-6C			
9	CMPSY	P026-1			
10	GND (A)	P026-2			
11	REF CF	P003-11C			
12	REF CLK	P003-12C			
13	REF CLK	P003-13C			
14	INCOM SC	P003-14C			
15	FV/8	P024-5B			
16	CAP DIR	P019-20A			
17					
18	PB V SYNC	P019-14A			
19					
20	TXD	P036-1			
21	TXD	P036-2			
22	RXD	P036-3			
23	RXD	P036-4			
24	AV AB 15	P024-14A	P001-24C	P003-24C	P005-24C
25	AV AB 12	P024-17A	P001-25C	P003-25C	P005-25C
26	AV AB 9	P024-20A	P001-26C	P003-26C	P005-26C
27	AV AD 6	P024-24A	P001-27C	P003-27C	P005-27C
28	AV AD 3	P024-27A	P001-28C	P003-28C	P005-28C
29	AV AD 0	P024-30A	P001-29C	P003-29C	P005-29C
30	AV WR	P024-11A	P001-30C	P003-30C	P005-30C
31					
32	GND (D)				

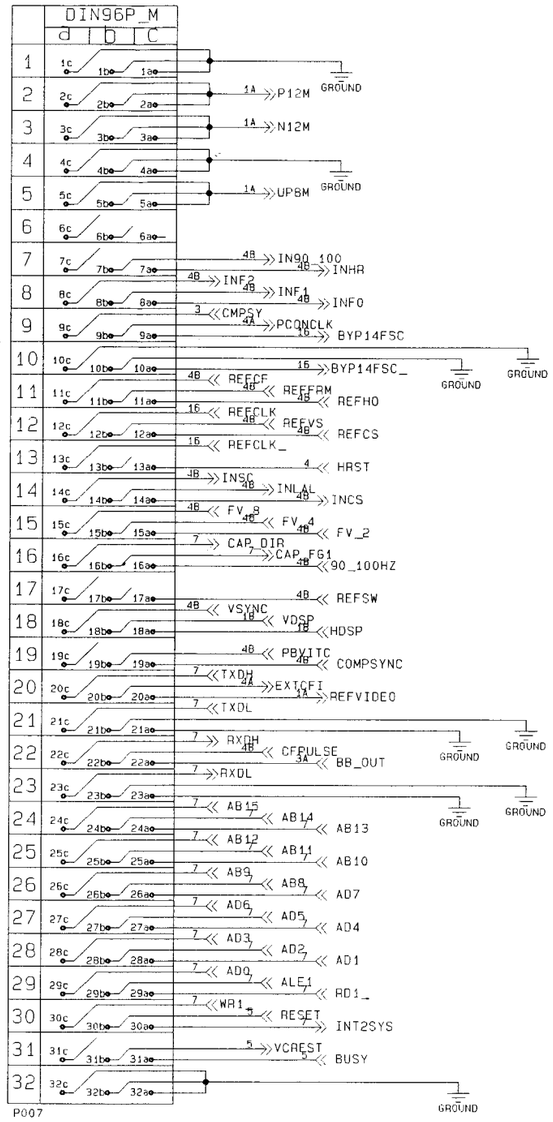

P008	A	L 4 FROM / TO			
1	GND (D)				
2	PB DATA 5	P006-2A			
3	PB DATA 3	P006-3A			
4	PB DATA 0	P006-4A			
5	PB HST	P006-5A			
6	PB FN 0	P006-6A			
7	REF HST	P006-7A			
8	REF FN 0	P006-8A			
9	SYS 4FSC	P006-9A			
10	SYS 4FSC	P006-10A			
11	AV DATA 5	P002-11A			
12	AV DATA 2	P002-12A			
13	AV DATA -1	P002-13A			
14	AV CLK 0	P002-14A			
15	DV DATA OUT 5	P027-5			
16	DV DATA OUT 5	P027-6			
17	DV DATA OUT 2	P028-1			
18	DV DATA OUT 2	P028-2			
19	DV DATA OUT-1	P028-7			
20	DV DATA OUT-1	P028-8			
21					
22					
23	BYP 9	P004-23A	P006-23A		
24	BYP 6	P004-24A	P006-24A		
25	BYP 3	P004-25A	P006-25A		
26	BYP 0	P004-26A	P006-26A		
27	GND (D)				
28	+5V (D)				
29	+5V (D)				
30	-5V (D)				
31	GND (D)				
32	GND (D)				

P008	B	L 4 FROM / TO			
1	GND (D)				
2	PB DATA 7	P006-2B			
3	PB DATA 4	P006-3B			
4	PB DATA 1	P006-4B			
5	PB FLDST	P006-5B			
6	ERR STRB	P006-6B			
7	REF FLDST	P006-7B			
8	REF FN1	P006-8B			
9	SYS 2FSC	P006-9B			
10	SYS 2FSC	P006-10B			
11	AV DATA 6	P002-11B			
12	AV DATA 3	P002-12B			
13	AV DATA 0	P002-13B			
14	AV CLK 0	P002-14B			
15	DV DATA OUT 6	P027-3			
16	DV DATA OUT 6	P027-4			
17	DV DATA OUT 3	P027-9			
18	DV DATA OUT 3	P027-10			
19	DV DATA OUT 0	P028-5			
20	DV DATA OUT 0	P028-6			
21	DV CLK 0	P028-11			
22	DV CLK 0	P028-12			
23	BYP 10	P004-23B	P006-23B		
24	BYP 7	P004-24B	P006-24B		
25	BYP 4	P004-25B	P006-25B		
26	BYP 1	P004-26B	P006-26B		
27	GND (D)				
28	+5V (D)				
29	+5V (D)				
30	-5V (D)				
31	GND (D)				
32	GND (D)				

P008	C	L 4 FROM / TO			
1	GND (D)				
2	PB FLAG	P006-2C			
3	PB DATA 5	P006-3C			
4	PB DATA 2	P006-4C			
5	PB CFST	P006-5C			
6					
7					
8	REF FN 2	P006-8C			
9	SYNC BLNK	P002-9C			
10	BURST FLAG	P002-10C			
11	AV DATA 7	P002-11C			
12	AV DATA 4	P002-12C			
13	AV DATA 1	P002-13C			
14	AV DATA -2	P002-14C			
15	DV DATA OUT 7	P027-1			
16	DV DATA OUT 7	P027-2			
17	DV DATA OUT 4	P027-7			
18	DV DATA OUT 4	P027-8			
19	DV DATA OUT 1	P028-3			
20	DV DATA OUT 1	P028-4			
21	DV DATA OUT -2	P028-9			
22	DV DATA OUT -2	P028-10			
23	BYP 11	P004-23C	P006-23C		
24	BYP 8	P004-24C	P006-24C		
25	BYP 5	P004-25C	P006-25C		
26	BYP 2	P004-26C	P006-26C		
27	GND (D)				
28	+5V (D)				
29	+5V (D)				
30	-5V (D)				
31	GND (D)				
32	GND (D)				

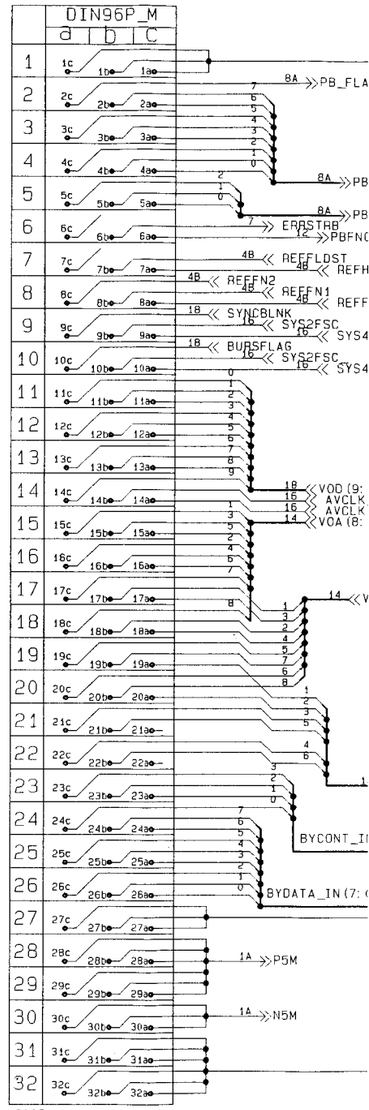

A B C D

1 2 3 4 5 6

CHEMATIC DIAGRAM (17/22)

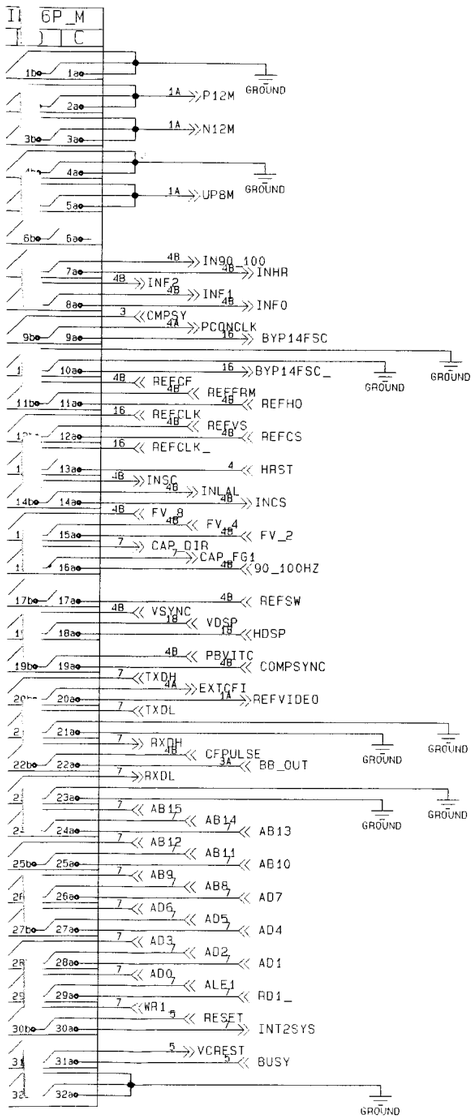

P008	A	L 4 FROM / TO			
1	GND (D)				
2	PB DATA 6	P006-2A			
3	PB DATA 3	P006-3A			
4	PB DATA 0	P006-4A			
5	PB HST	P006-5A			
6	PB FN 0	P006-6A			
7	REF HST	P006-7A			
8	REF FN 0	P006-8A			
9	SYS 4FSC	P006-9A			
10	SYS 4FSC	P006-10A			
11	AV DATA 5	P002-11A			
12	AV DATA 2	P002-12A			
13	AV DATA -1	P002-13A			
14	AV CLK 0	P002-14A			
15	DV DATA OUT 5	P027-5			
16	DV DATA OUT 5	P027-6			
17	DV DATA OUT 2	P028-1			
18	DV DATA OUT 2	P028-2			
19	DV DATA OUT-1	P028-7			
20	DV DATA OUT-1	P028-8			
21					
22					
23	BYP 9	P004-23A	P006-23A		
24	BYP 6	P004-24A	P006-24A		
25	BYP 3	P004-25A	P006-25A		
26	BYP 0	P004-26A	P006-26A		
27	GND (D)				
28	+5V (D)				
29	+5V (D)				
30	-5V (D)				
31	GND (D)				
32	GND (D)				

P008	B	L 4 FROM / TO			
1	GND (D)				
2	PB DATA 7	P006-2B			
3	PB DATA 4	P006-3B			
4	PB DATA 1	P006-4B			
5	PB FLDST	P006-5B			
6	ERR STRB	P006-6B			
7	REF FLDST	P006-7B			
8	REF FN1	P006-8B			
9	SYS 2FSC	P006-9B			
10	SYS 2FSC	P006-10B			
11	AV DATA 6	P002-11B			
12	AV DATA 3	P002-12B			
13	AV DATA 0	P002-13B			
14	AV CLK 0	P002-14B			
15	DV DATA OUT 6	P027-3			
16	DV DATA OUT 6	P027-4			
17	DV DATA OUT 3	P027-9			
18	DV DATA OUT 3	P027-10			
19	DV DATA OUT 0	P028-5			
20	DV DATA OUT 0	P028-6			
21	DV CLK 0	P028-11			
22	DV CLK 0	P028-12			
23	BYP 10	P004-23B	P006-23B		
24	BYP 7	P004-24B	P006-24B		
25	BYP 4	P004-25B	P006-25B		
26	BYP 1	P004-26B	P006-26B		
27	GND (D)				
28	+5V (D)				
29	+5V (D)				
30	-5V (D)				
31	GND (D)				
32	GND (D)				

P008	C	L 4 FROM / TO			
1	GND (D)				
2	PB FLAG	P006-2C			
3	PB DATA 5	P006-3C			
4	PB DATA 2	P006-4C			
5	PB CFST	P006-5C			
6					
7					
8	REF FN 2	P006-8C			
9	SYNC BLNK	P002-9C			
10	BURST FLAG	P002-10C			
11	AV DATA 7	P002-11C			
12	AV DATA 4	P002-12C			
13	AV DATA 1	P002-13C			
14	AV DATA -2	P002-14C			
15	DV DATA OUT 7	P027-1			
16	DV DATA OUT 7	P027-2			
17	DV DATA OUT 4	P027-7			
18	DV DATA OUT 4	P027-8			
19	DV DATA OUT 1	P028-3			
20	DV DATA OUT 1	P028-4			
21	DV DATA OUT -2	P028-9			
22	DV DATA OUT -2	P028-10			
23	BYP 11	P004-23C	P006-23C		
24	BYP 8	P004-24C	P006-24C		
25	BYP 5	P004-25C	P006-25C		
26	BYP 2	P004-26C	P006-26C		
27	GND (D)				
28	+5V (D)				
29	+5V (D)				
30	-5V (D)				
31	GND (D)				
32	GND (D)				

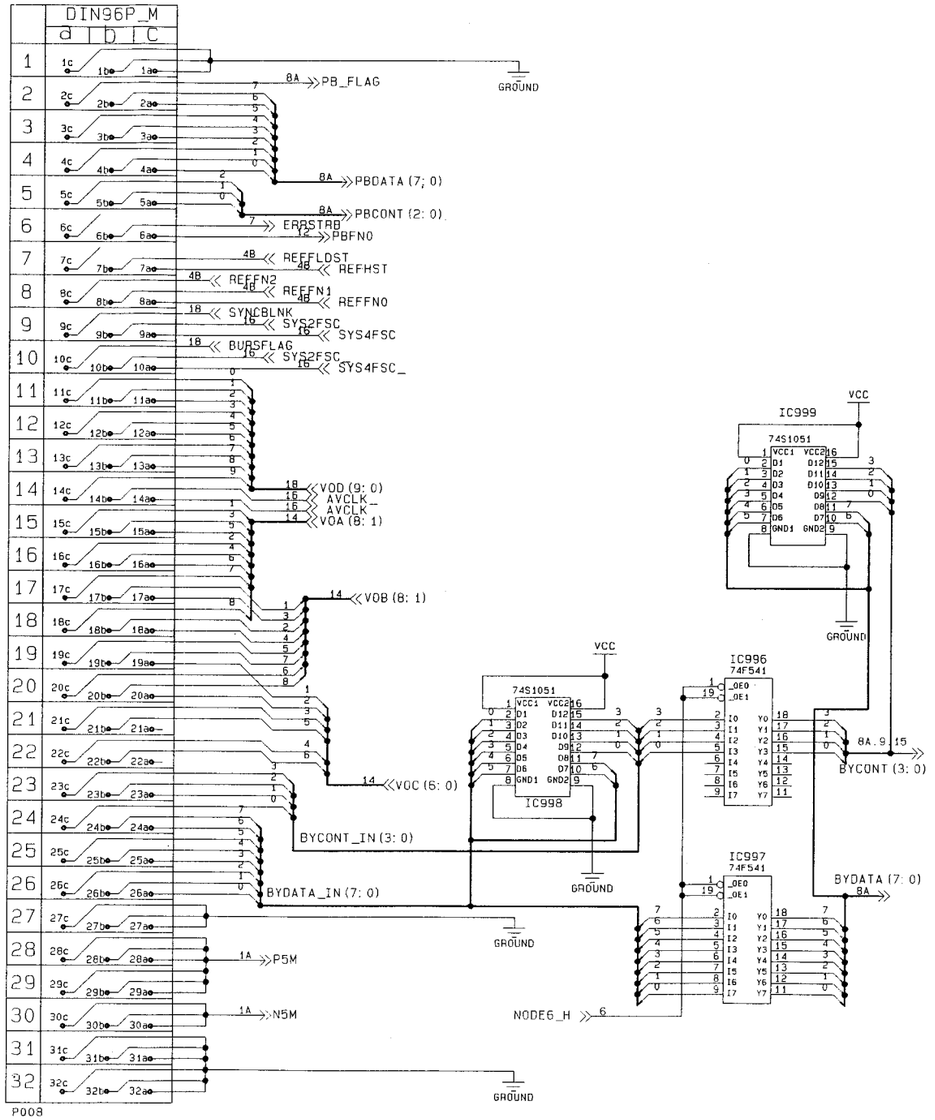

L4 VIDEO PROCESS (ENO PROC) SCHEMATIC DIAGRAM (18/22)

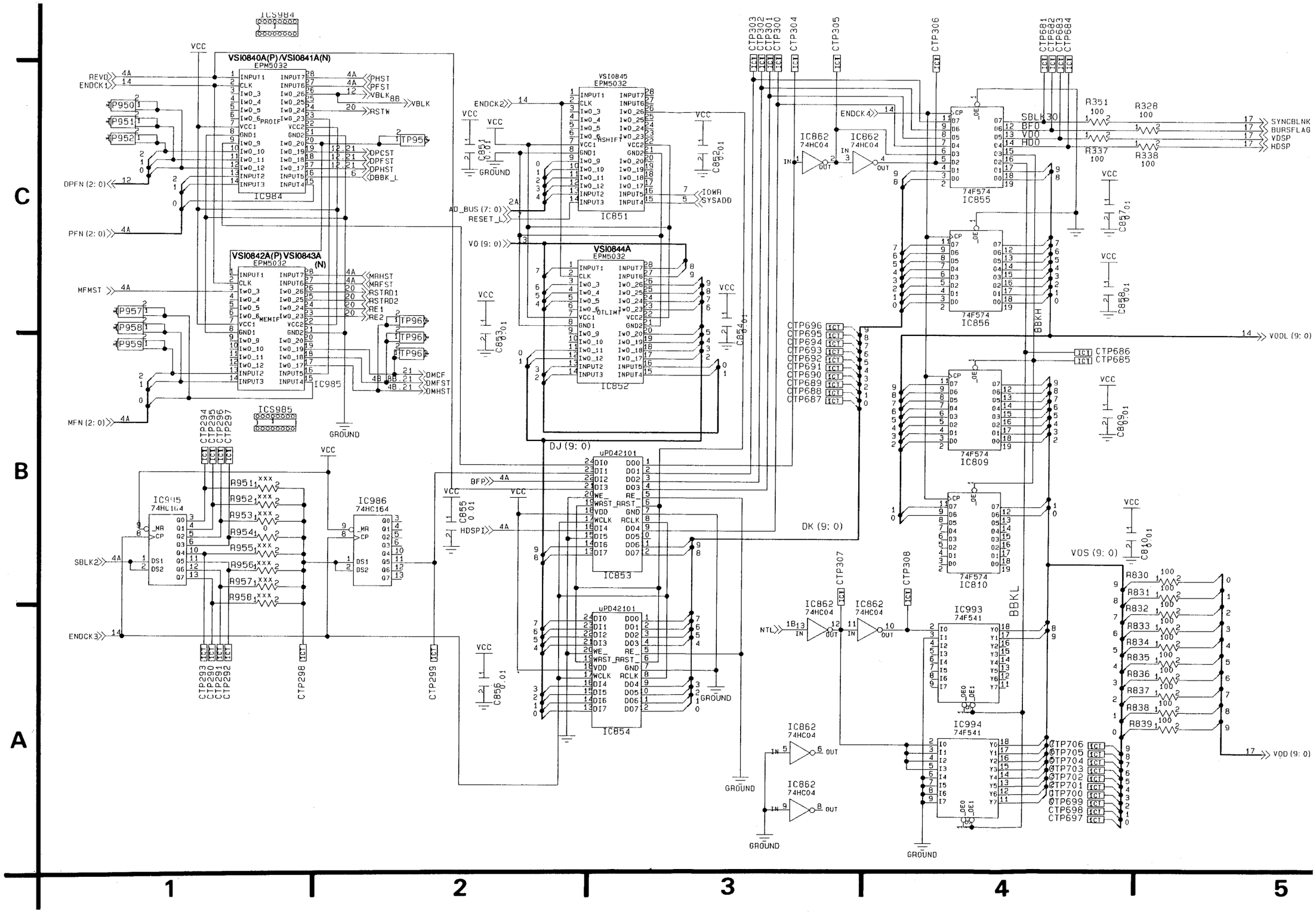

4—2—69

4—2—69

L4 VIDEO PROCESS SCHEMATIC DIAGRAM (19/22)

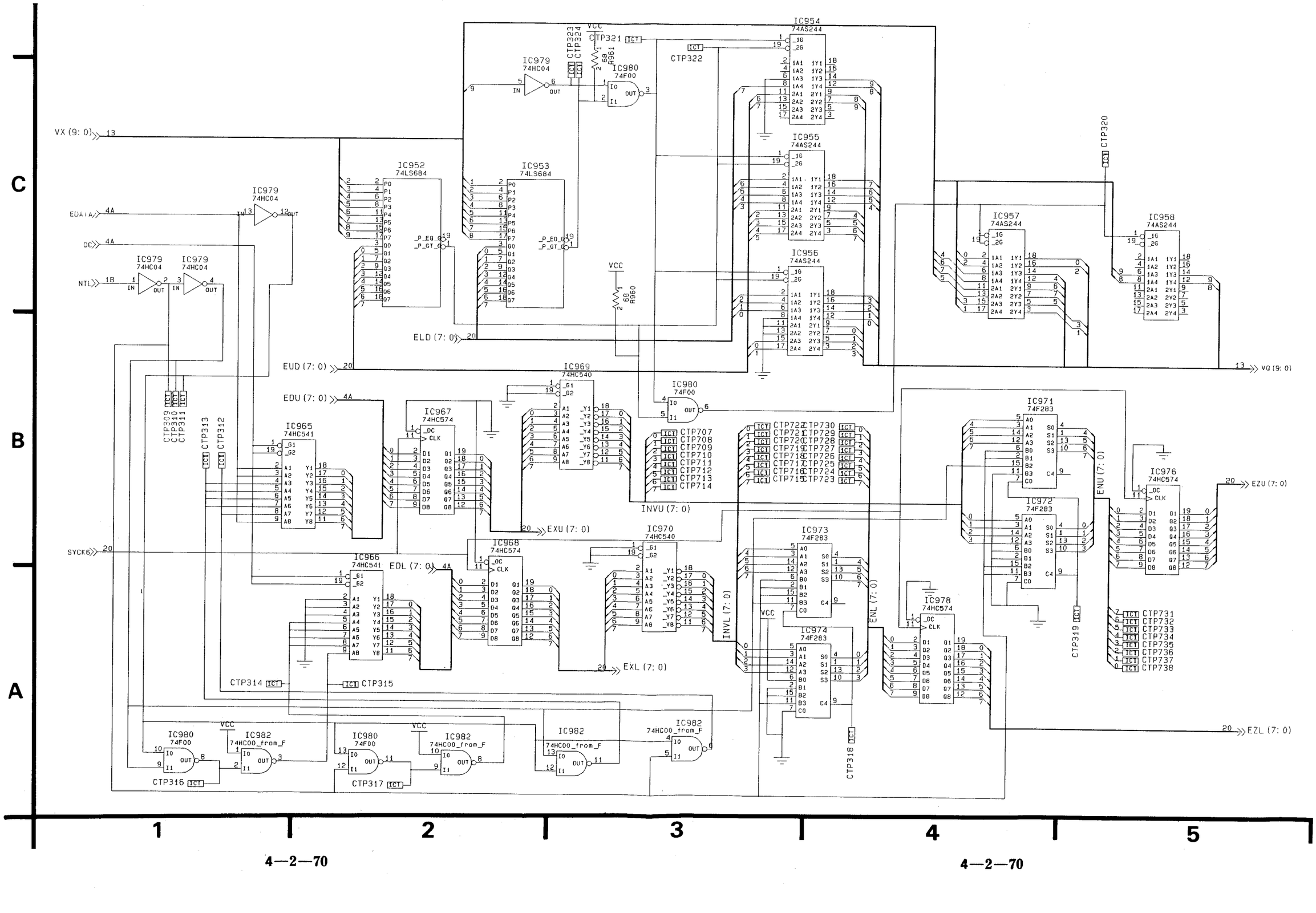

4—2—70

4—2—70

L4 VIDEO PROCESS SCHEMATIC DIAGRAM (20/22)

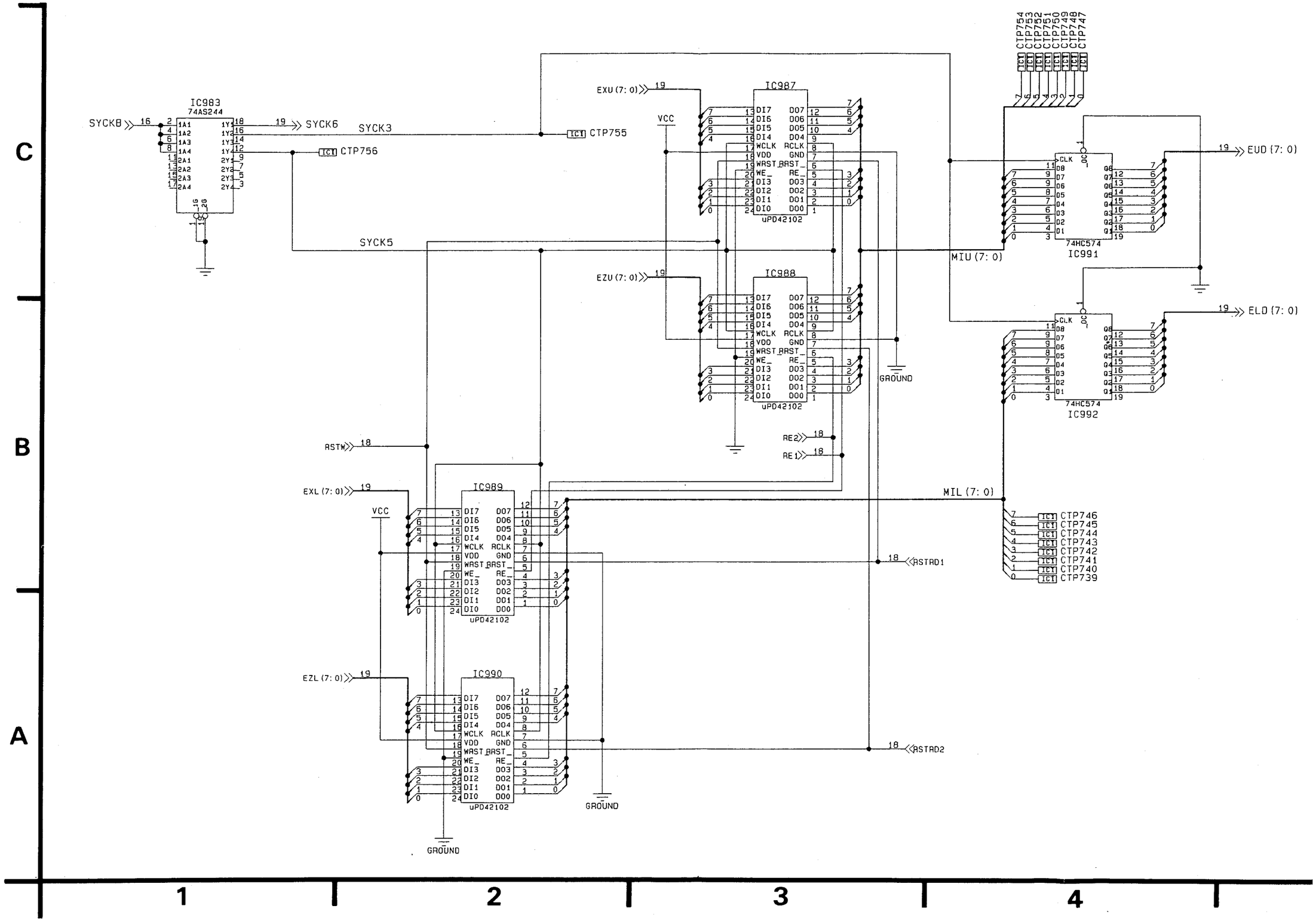

4—2—71

L4 VIDEO PROCESS SCHEMATIC DIAGRAM (21/22)

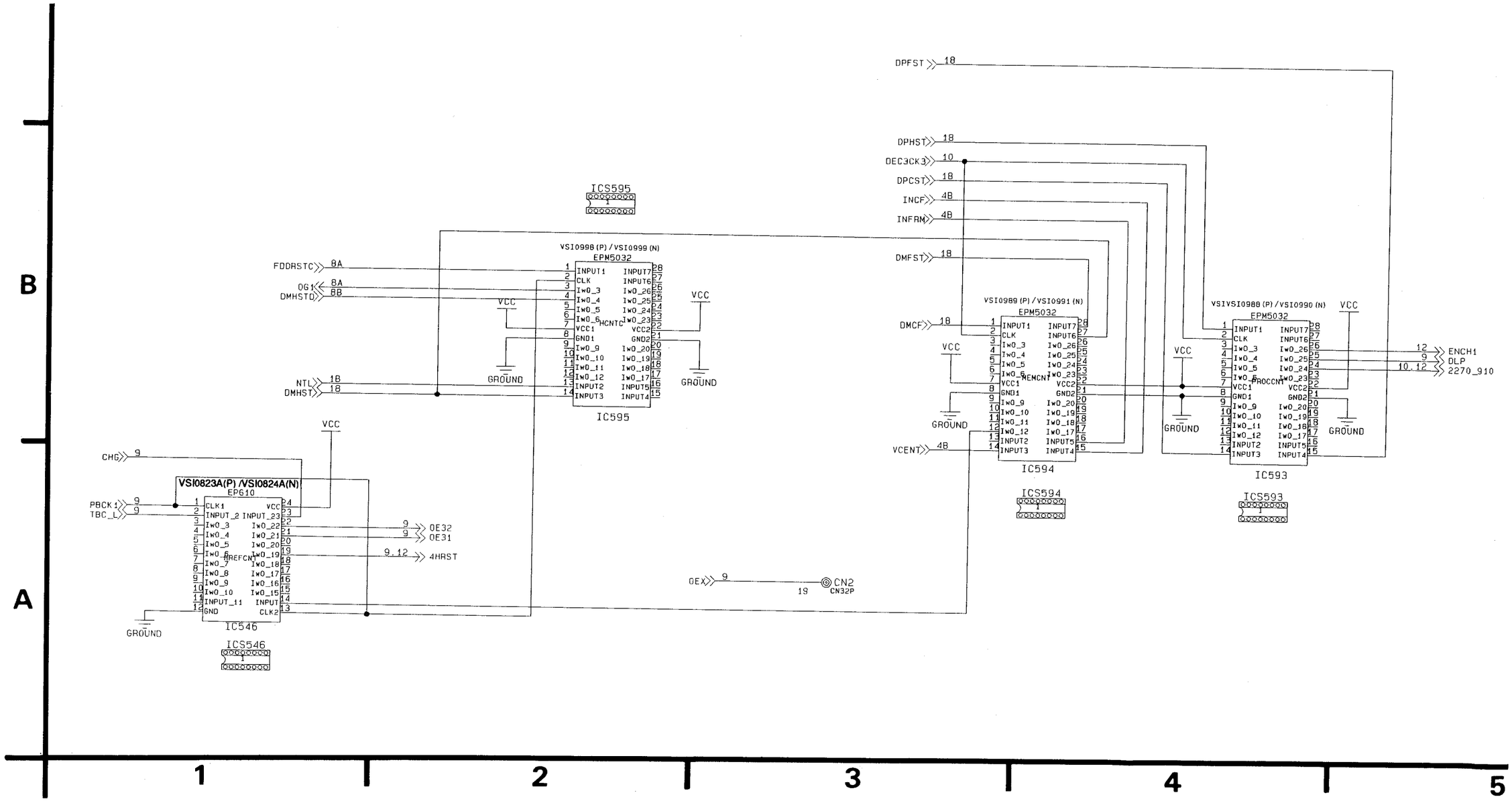

L4 VIDEO PROCESS SCHEMATIC DIAGRAM (22/22)

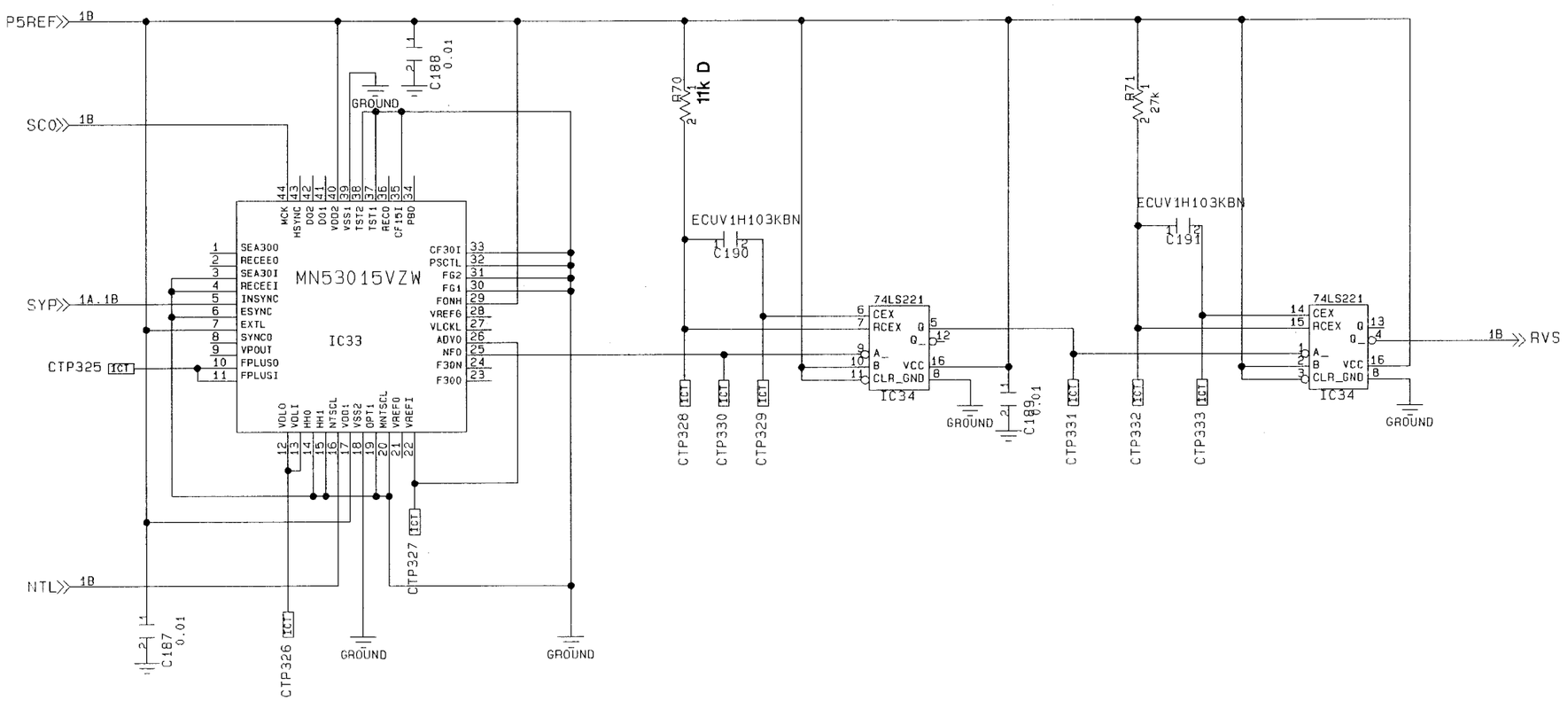

L4 VIDEO PROCESS SUB SCHEMATIC DIAGRAM (1/2)

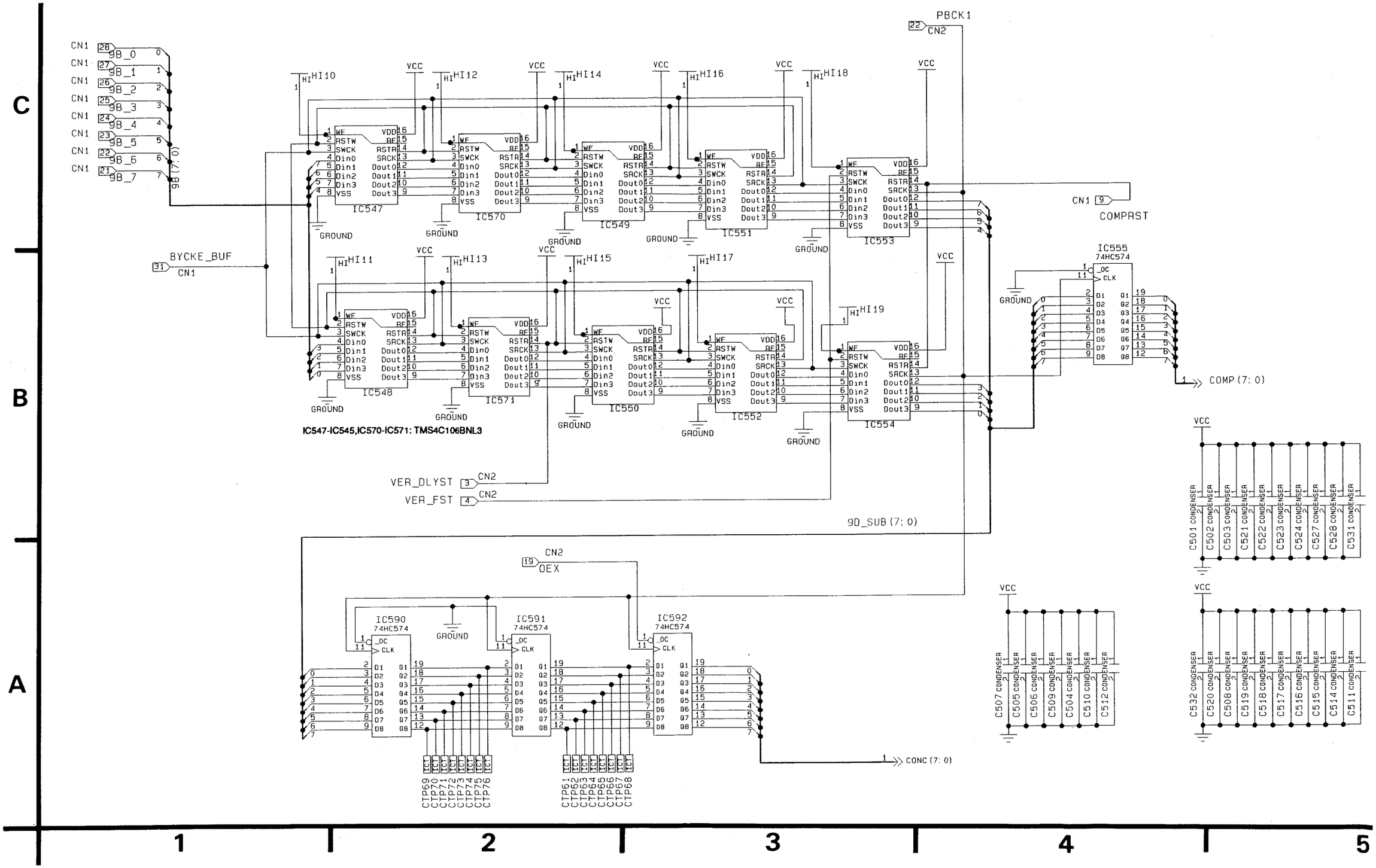

NTSC

L4 WAVEFORMS NTSC

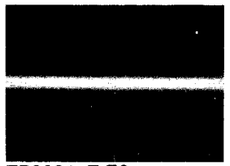
TP8001 E-E2
(TP8002)
50mV/20µsec. div.

TP8008 E-E2
2V/50µsec. div.

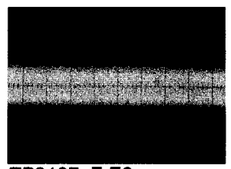
TP8107 E-E2
(TP8108)
50mV/50µsec. div.

TP8304 E-E2
2V/20µsec. div.

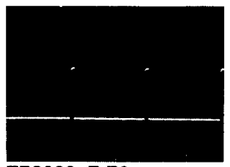
TP8003 E-E2
2V/20µsec. div.

TP8009 E-E2
50mV/20µsec. div.

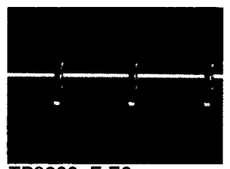
TP8200 E-E2
500mV/20µsec. div.

TP8305 E-E2
2V/2msec. div.

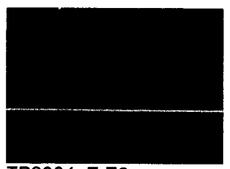
TP8004 E-E2
2V/20µsec. div.

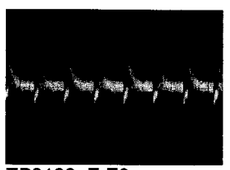
TP8100 E-E2
50mV/50µsec. div.

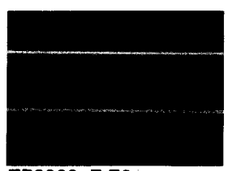
TP8300 E-E2
2V/20µsec. div.

TP8306 E-E2
2V/5msec. div.

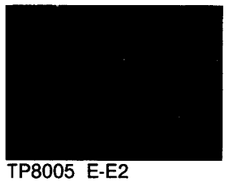
TP8005 E-E2
2V/20msec. div.

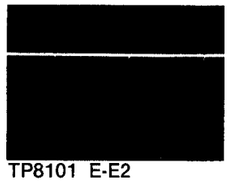
TP8101 E-E2
2V/20µsec. div.

TP8302 E-E2
2V/10msec. div.

TP8307 E-E2
2V/10msec. div.

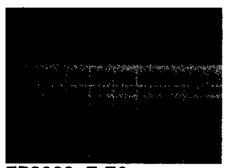
TP8006 E-E2
50mV/1msec. div.

TP8102 E-E2
2V/20µsec. div.

TP8301 E-E2
2V/50µsec. div.

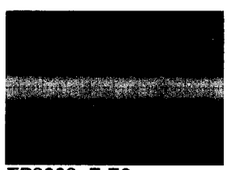
TP8308 E-E2
50mV/20µsec. div.

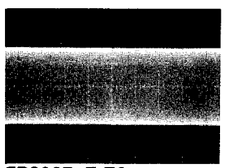
TP8007 E-E2
2V/20µsec. div.

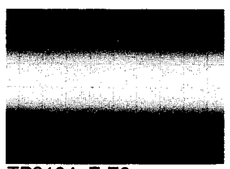
TP8104 E-E2
(TP8105, TP8106)
20mV/20µsec. div.

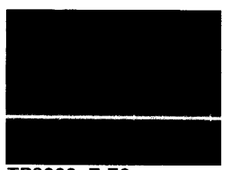
TP8303 E-E2
2V/20µsec. div.

TP8309 E-E2
2V/10msec. div.

L4 WAVEFORMS NTSC

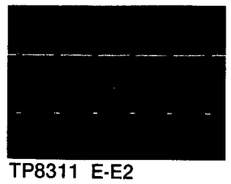
TP8311 E-E2
2V/20µsec. div.

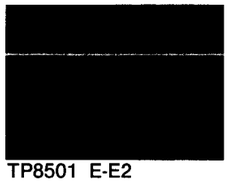
TP8501 E-E2
2V/5msec. div.

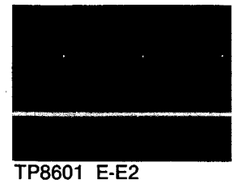
TP8601 E-E2
2V/5msec. div.

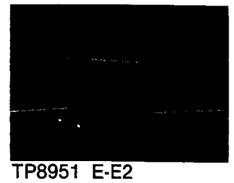
TP8951 E-E2
2V/10msec. div.

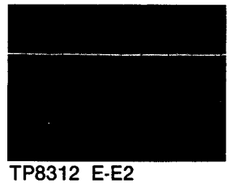
TP8312 E-E2
2V/5msec. div.

TP8502 E-E2
2V/20msec. div.

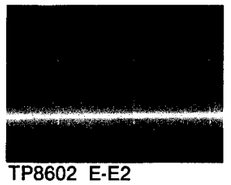
TP8602 E-E2
2V/20µsec. div.

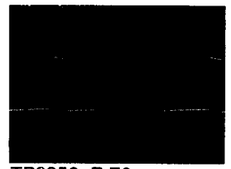
TP8952 E-E2
2V/20msec. div.

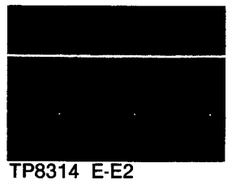
TP8314 E-E2
(TP8315)
2V/20µsec. div.

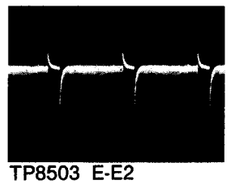
TP8503 E-E2
500mV/20µsec. div.

TP8603 E-E2
2V/20msec. div.

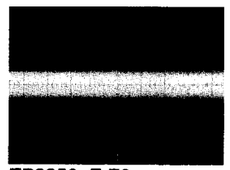
TP8956 E-E2
50mV/20µsec. div.

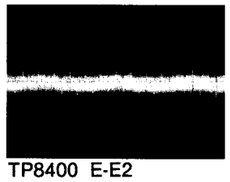
TP8400 E-E2
100mV/20µsec. div.

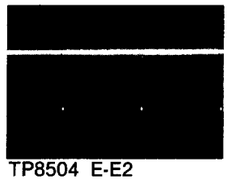
TP8504 E-E2
2V/5msec. div.

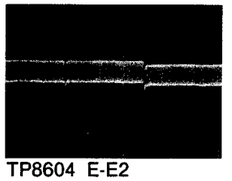
TP8604 E-E2
500mV/5msec. div.

TP8957 E-E2
2V/10msec. div.

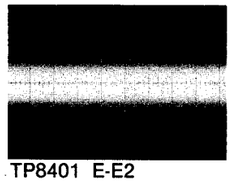
TP8401 E-E2
100mV/20µsec. div.

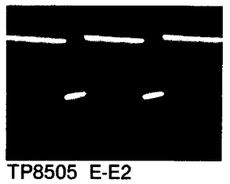
TP8505 E-E2
2V/20msec. div.

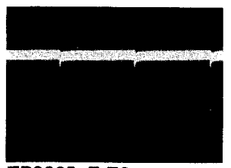
TP8605 E-E2
2V/20µsec. div.

TP8958 E-E2
2V/10msec. div.

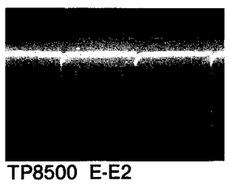
TP8500 E-E2
2V/20µsec. div.

TP8600 E-E2
2V/20msec. div.

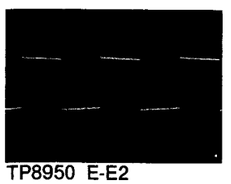
TP8950 E-E2
2V/10msec. div.

TP8959 E-E2
2V/20msec. div.

L4 WAVEFORMS NTSC

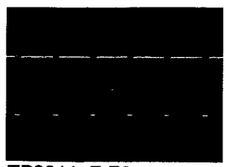
TP8311 E-E2
2V/20µsec. div.

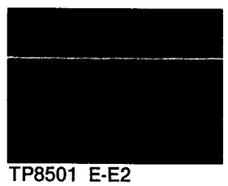
TP8501 E-E2
2V/5msec. div.

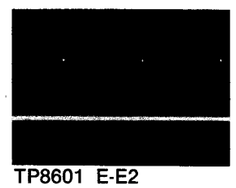
TP8601 E-E2
2V/5msec. div.

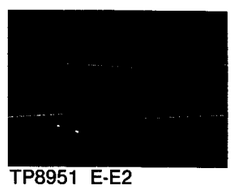
TP8951 E-E2
2V/10msec. div.

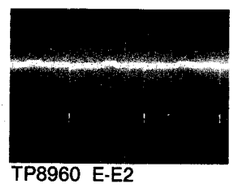
TP8960 E-E2
2V/20µsec. div.

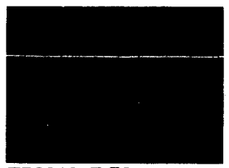
TP8312 E-E2
2V/5msec. div.

TP8502 E-E2
2V/20msec. div.

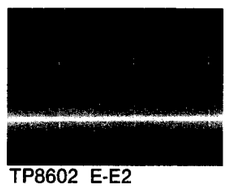
TP8602 E-E2
2V/20µsec. div.

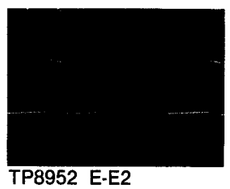
TP8952 E-E2
2V/20msec. div.

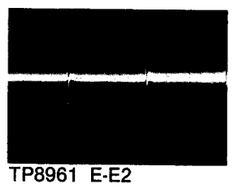
TP8961 E-E2
500mV/5msec. div.

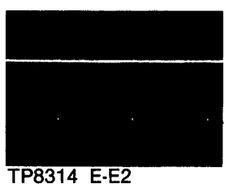
TP8314 E-E2
(TP8315)
2V/20µsec. div.

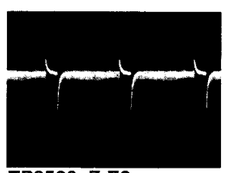
TP8503 E-E2
500mV/20µsec. div.

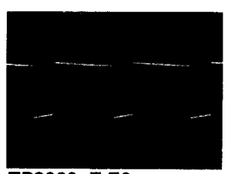
TP8603 E-E2
2V/20msec. div.

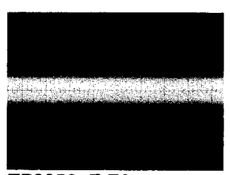
TP8956 E-E2
50mV/20µsec. div.

TP8962 E-E2
2V/20msec. div.

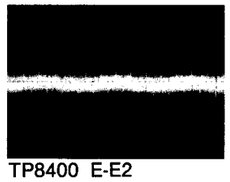
TP8400 E-E2
100mV/20µsec. div.

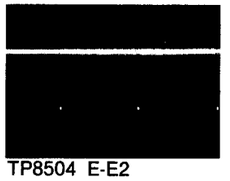
TP8504 E-E2
2V/5msec. div.

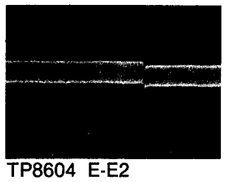
TP8604 E-E2
500mV/5msec. div.

TP8957 E-E2
2V/10msec. div.

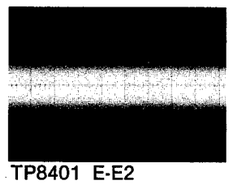
TP8401 E-E2
100mV/20µsec. div.

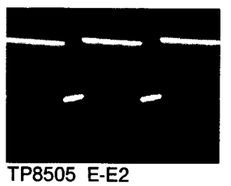
TP8505 E-E2
2V/20msec. div.

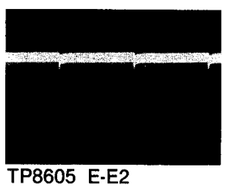
TP8605 E-E2
2V/20µsec. div.

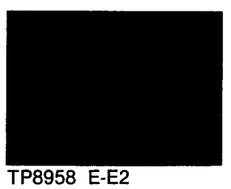
TP8958 E-E2
2V/10msec. div.

TP8500 E-E2
2V/20µsec. div.

TP8600 E-E2
2V/20msec. div.

TP8950 E-E2
2V/10msec. div.

TP8959 E-E2
2V/20msec. div.

PAL

L4 WAVEFORMS PAL

TP8001 E-E2
20mV/20µsec. div.

TP8007 E-E2
2V/20µsec. div.

TP8104 E-E2
20mV/20µsec. div.

TP8303 E-E2
2V/20µsec. div.

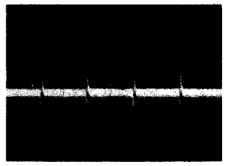
TP8002 E-E2
100mV/10msec. div.

TP8008 E-E2
2V/50µsec. div.

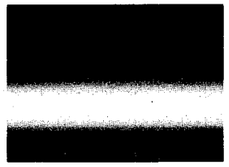
TP8105 E-E2
(TP8106, TP8107, TP8108)
50mV/20µsec. div.

TP8304 E-E2
2V/20µsec. div.

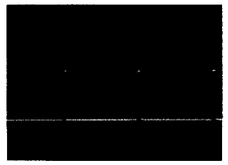
TP8003 E-E2
2V/20µsec. div.

TP8009 E-E2
20mV/20µsec. div.

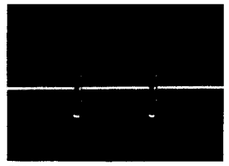
TP8200 E-E2
500mV/20µsec. div.

TP8305 E-E2
2V/2msec. div.

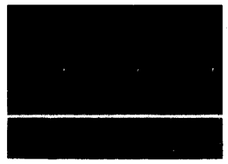
TP8004 E-E2
2V/20µsec. div.

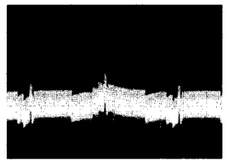
TP8100 E-E2
20mV/20µsec. div.

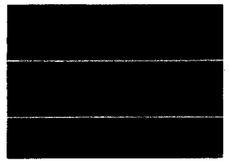
TP8300 E-E2
2V/20µsec. div.

TP8306 E-E2
2V/10msec. div.

TP8005 E-E2
2V/20msec. div.

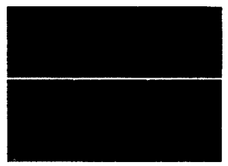
TP8101 E-E2
2V/20µsec. div.

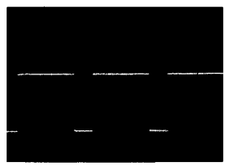
TP8301 E-E2
2V/20µsec. div.

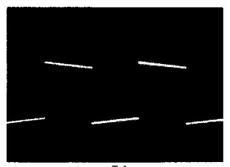
TP8307 E-E2
2V/20msec. div.

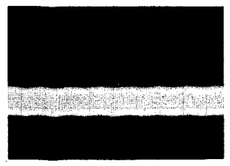
TP8006 E-E2
20mV/50µsec. div.

TP8102 E-E2
2V/20µsec. div.

TP8302 E-E2
2V/20msec. div.

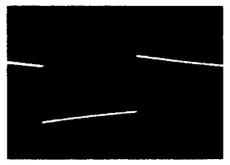
TP8308 E-E2
(TP8309)
2V/20msec. div.

L4 WAVEFORMS PAL

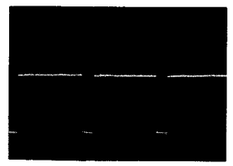
TP8311 E-E2
2V/10µsec. div.

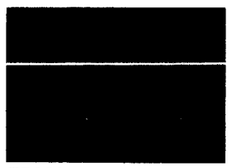
TP8501 E-E2
2V/5msec. div.

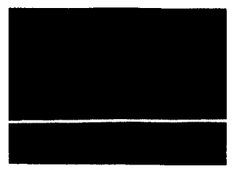
TP8601 E-E2
2V/10msec. div.

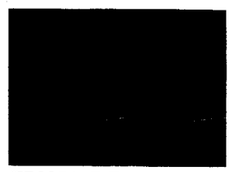
TP8951 E-E2
2V/20msec. div.

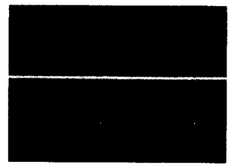
TP8312 E-E2
2V/5msec. div.

TP8502 E-E2
2V/20msec. div.

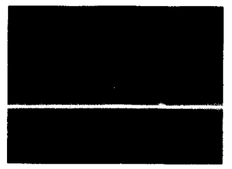
TP8602 E-E2
2V/20µsec. div.

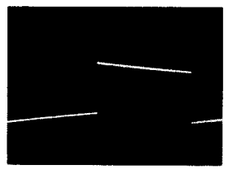
TP8952 E-E2
2V/20msec. div.

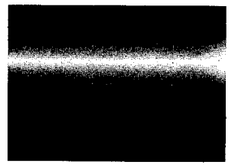
TP8314 E-E2
2V/10msec. div.

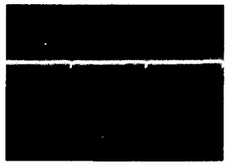
TP8503 E-E2
2V/20µsec. div.

TP8603 E-E2
2V/20msec. div.

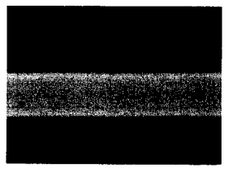
TP8956 E-E2
200mV/100µsec. div.

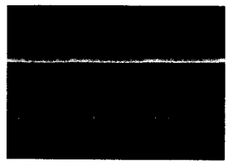
TP8315 E-E2
2V/20µsec. div.

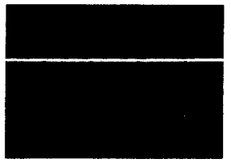
TP8504 E-E2
2V/10msec. div.

TP8604 E-E2
2V/5msec. div.

TP8957 E-E2
2V/10msec. div.

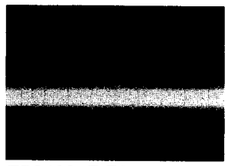
TP8400 E-E2
(TP8401)
100mV/20µsec. div.

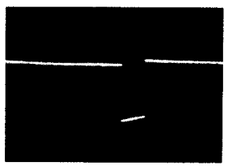
TP8505 E-E2
2V/20msec. div.

TP8605 E-E2
2V/20µsec. div.

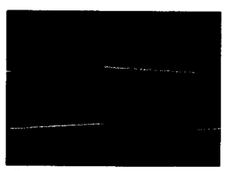
TP8958 E-E2
2V/10msec. div.

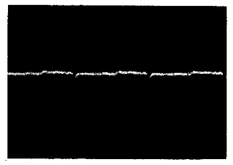
TP8500 E-E2
500mV/20µsec. div.

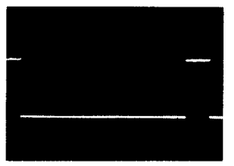
TP8600 E-E2
2V/20msec. div.

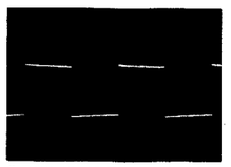
TP8950 E-E2
2V/10msec. div.

TP8959 E-E2
2V/20msec. div.

L4 WAVEFORMS PAL

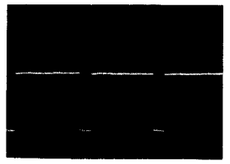

TP8311 E-E2
2V/10µsec. div.

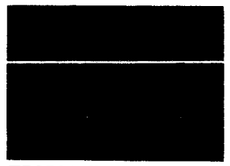

TP8501 E-E2
2V/5msec. div.

TP8601 E-E2
2V/10msec. div.

TP8951 E-E2
2V/20msec. div.

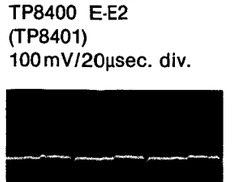

TP8312 E-E2
2V/5msec. div.

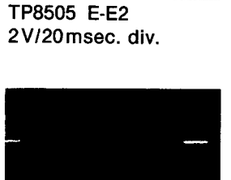

TP8502 E-E2
2V/20msec. div.

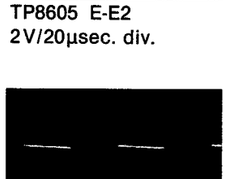

TP8602 E-E2
2V/20µsec. div.

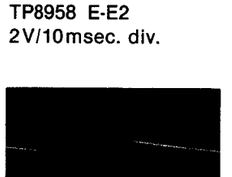

TP8952 E-E2
2V/20msec. div.

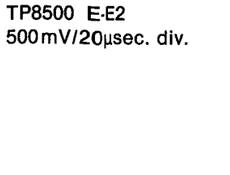

TP8314 E-E2
2V/10msec. div.

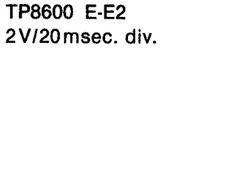

TP8503 E-E2
2V/20µsec. div.

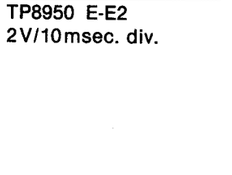

TP8603 E-E2
2V/20msec. div.

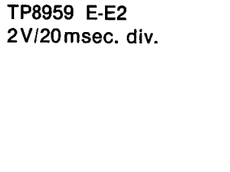

TP8956 E-E2
200mV/100µsec. div.

TP8315 E-E2
2V/20µsec. div.

TP8504 E-E2
2V/10msec. div.

TP8604 E-E2
2V/5msec. div.

TP8957 E-E2
2V/10msec. div.

TP8400 E-E2
(TP8401)
100mV/20µsec. div.

TP8505 E-E2
2V/20msec. div.

TP8605 E-E2
2V/20µsec. div.

TP8958 E-E2
2V/10msec. div.

TP8500 E-E2
500mV/20µsec. div.

TP8600 E-E2
2V/20msec. div.

TP8950 E-E2
2V/10msec. div.

TP8959 E-E2
2V/20msec. div.

L4 WAVEFORMS PAL

TP8960 E-E2
2V/20msec. div.

TP8961 E-E2
2V/5msec. div.

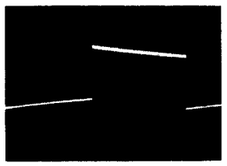

TP8962 E-E2
2V/20msec. div.

L4 VIDEO PROCESS SUB SCHEMATIC DIAGRAM (2/2)

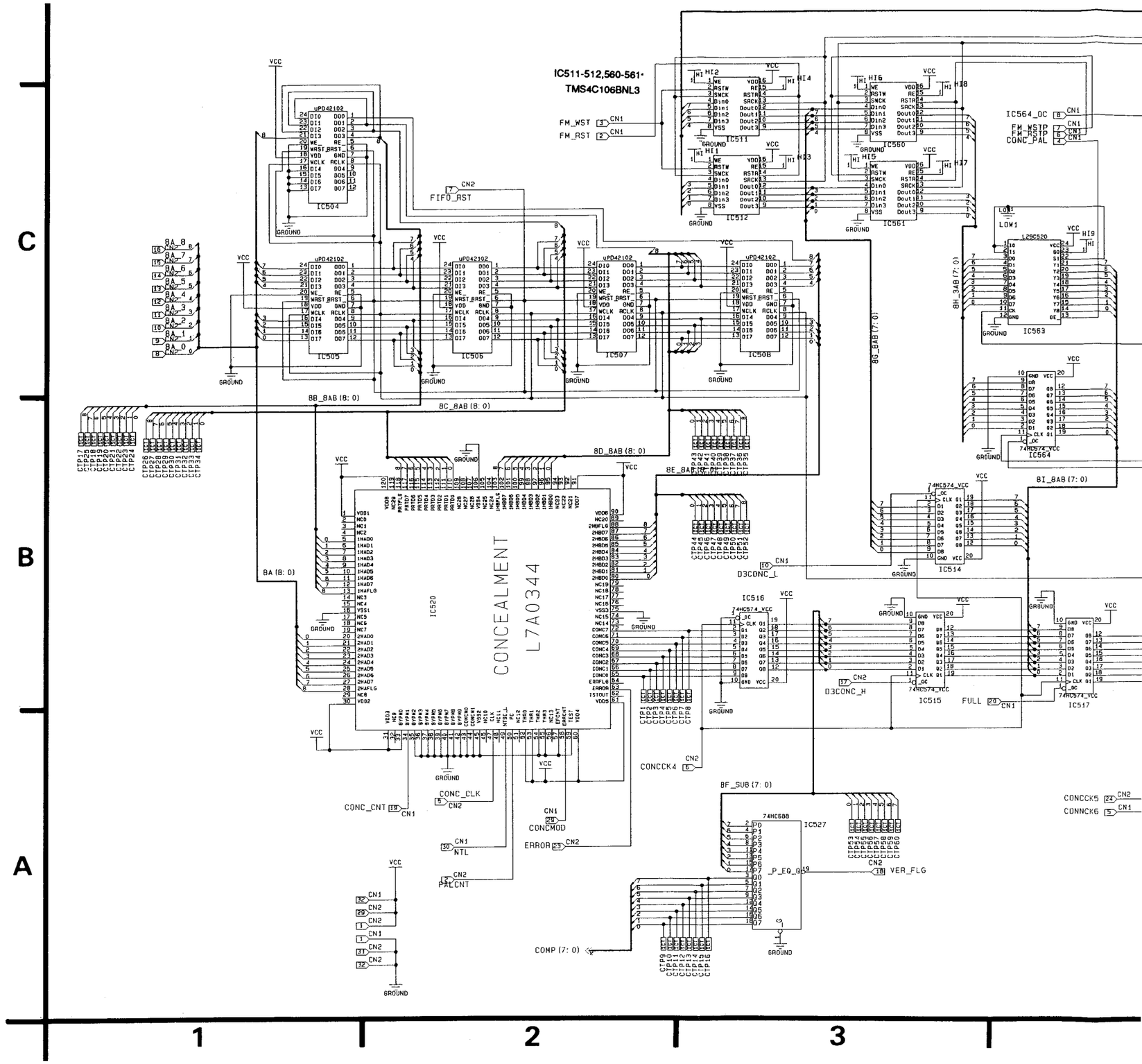

OCESS SUB SCHEMATIC DIAGRAM (2/2)

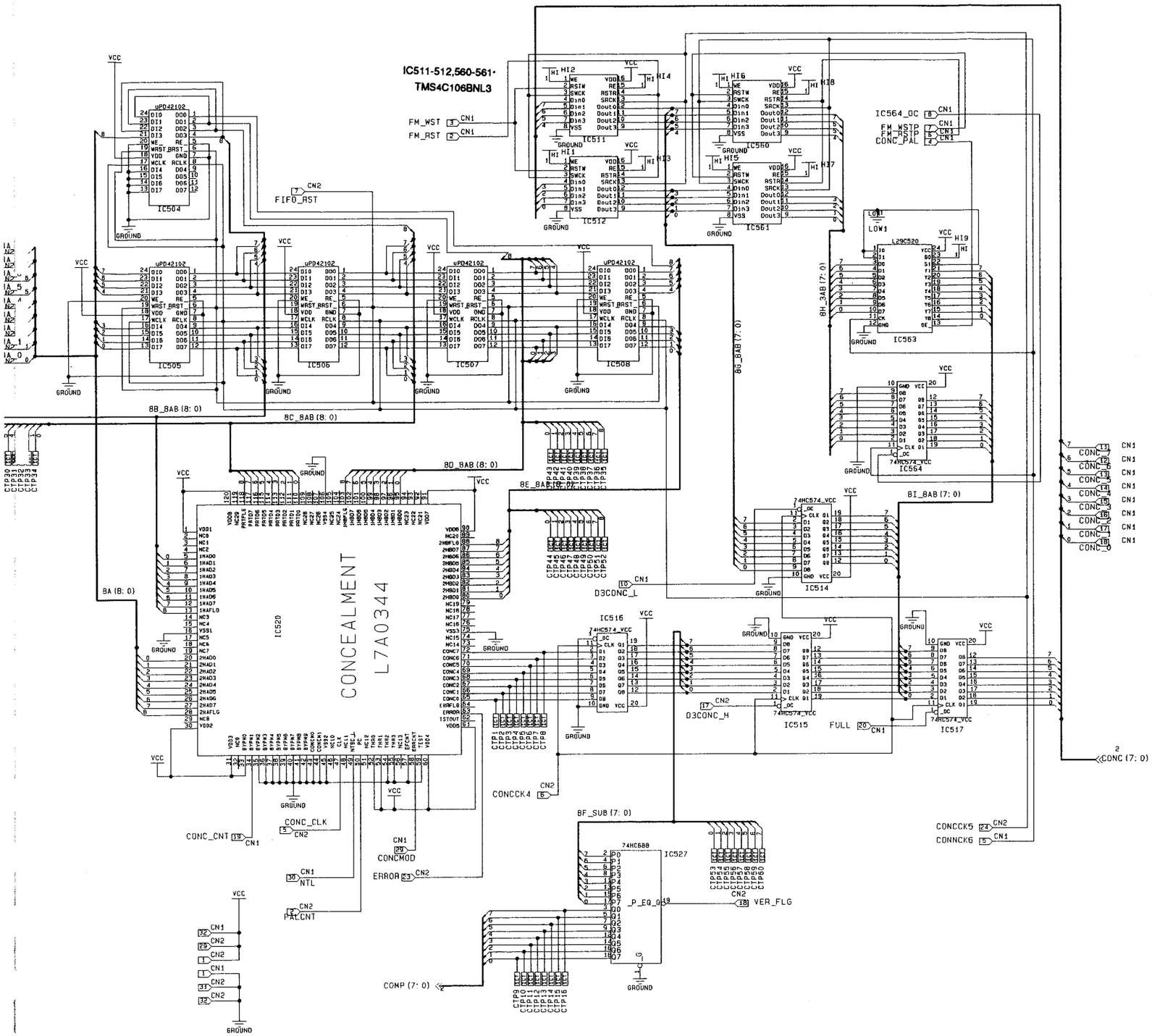

L MOTHER (P019, P024) SCHEMATIC DIAGRAM (5/7)

P024
HIROSE PCN13-96S-2.54DSA
L

FROM / TO					A		B	FROM / TO				
GND					GND (D)	1	GND (D)					GND
TEST_EE2			P018-13	P005-17A	TEST_EE2	2	BLK SYNC					BLK_SYNC
ENV_DET1				P005-23A	ENV-DET CH1	3	PB H SW	P005-13C				PB_H_SW
ENV_DET0				P005-22A	ENV-DET CH0	4	PB TP FRAME	P005-12C				PBTP_FRM
SEG-VAG				P005-10A	SEGM VAGUE	5	FV/8	P007-15C				FV/8
PB-FN0				P005-10B	PB - FN0	6	FV/4	P007-15B				FV/4
SEG-1				P005-9B	SEG - 1	7	FV/2	P007-15A	P004-19B			FV/2
SEG-0				P005-9A	SEGU - 0	8	90/100HZ	P007-16A				90/100HZ
AV_RESET	P001-30B	P003-30B	P005-30B	P007-30B	AV RESET	9	AU DATA IN 7	P003-17C	P006-13B			AUDAIN7
AV_BUSY				P007-31A	AV BUSY	10	AU DATA IN 6	P003-17B	P006-13A			AUDAIN6
AV_WR	P001-30C	P003-30C	P005-30C	P007-30C	AV WR	11	AU DATA IN 5	P003-17A	P006-12C			AUDAIN5
AV_RD	P001-29A	P003-29A	P005-29A	P007-29A	AV RD	12	AU DATA IN 4	P003-18C	P006-12B			AUDAIN4
AVSYSINT				P007-30A	AV SYS INT	13	AU DATA IN 3	P003-18B	P006-12A			AUDAIN3
AVAB_15	P001-24C	P003-24C	P005-24C	P007-24C	AV AB 15	14	AU DATA IN 2	P003-18A	P006-11C			AUDAIN2
AVAB_14	P001-24B	P003-24B	P005-24B	P007-24B	AV AB 14	15	AU DATA IN 1	P003-19C	P006-11B			AUDAIN1
AVAB_13	P001-24A	P003-24A	P005-24A	P007-24A	AV AB 13	16	AU DATA IN 0	P003-19B	P006-11A			AUDAIN0
AVAB_12	P001-25C	P003-25C	P005-25C	P007-25C	AV AB 12	17	FILD	P005-8A				FILD
AVAB_11	P001-25B	P003-25B	P005-25B	P007-25B	AV AB 11	18	PB5F	P005-7C	P003-7C			PB_5F
AVAB_10	P001-25A	P003-25A	P005-25A	P007-25A	AV AB 10	19	VALIDF	P005-7A				VALID_F
AVAB_9	P001-26C	P003-26C	P005-26C	P007-26C	AV AB 9	20	MUTE 34	P005-8C				MUTE_34
AVAB_8	P001-26B	P003-26B	P005-26B	P007-26B	AV AB 8	21	MUTE 12	P005-8B				MUTE_12
AV_ALE	P001-29B	P003-29B	P005-29B	P007-29B	AV ALE	22	ST FLG	P006-16B				ST_FLG
AVAD_7	P001-26A	P003-26A	P005-26A	P007-26A	AV AD 7	23	STD	P006-16A				ST_0
AVAD_6	P001-27C	P003-27C	P005-27C	P007-27C	AV AD 6	24	PBD 34	P006-15B				PBD_34
AVAD_5	P001-27B	P003-27B	P005-27B	P007-27B	AV AD 5	25	PBD 12	P006-15A				PBD_12
AVAD_4	P001-27A	P003-27A	P005-27A	P007-27A	AV AD 4	26	DSD L	P002-3B				DSD_L
AVAD_3	P001-28C	P003-28C	P005-28C	P007-28C	AV AD 3	27	DSD 3	P002-2C				DSD_3
AVAD_2	P001-28B	P003-28B	P005-28B	P007-28B	AV AD 2	28	DSD 1	P002-2A				DSD_1
AVAD_1	P001-28A	P003-28A	P005-28A	P007-28A	AV AD 1	29	ASD 3	P002-4C				ASD_3
AVAD_0	P001-29C	P003-29C	P005-29C	P007-29C	AV AD 0	30	ASD 1	P002-4A				ASD_1

P019
HIROSE PCN13-96S-2.54DSA
L

FROM / TO					A		B	FROM / TO				
*					GND (D)	1	GND (D)					GND
*						2						*
*						3	AV DATA IN 7	P004-11C				-AVDAIN7
*						4	AV DATA IN 7	P004-10C				AVDAIN7
VCPRESET				P007-31B	VCP RESET	5	AV DATA IN 6	P004-11B				-AVDAIN6
REC_VS				P004-7B	REC V SYNC	6	AV DATA IN 6	P004-10B				AVDAIN6
R_COM_SY				P004-6B	REC COMP SYNC	7	AV DATA IN 5	P004-11A				-AVDAIN5
VITCGATE				P004-7C	VITC GATE	8	AV DATA IN 5	P004-10A				AVDAIN5
REC_VITC				P004-6C	REC VITC	9	AV DATA IN 4	P004-13C				-AVDAIN4
REC_CF				P004-8C	REC CF	10	AV DATA IN 4	P004-12C				AVDAIN4
CHAR_GA				P002-20C	CHAR GATE	11	AV DATA IN 3	P004-13B				-AVDAIN3
CHAR_SIG				P002-20B	CHAR SIG	12	AV DATA IN 3	P004-12B				AVDAIN3
REC_H_SW				P004-8B	REC H SW	13	AV DATA IN 2	P004-13A				-AVDAIN2
V_SYNC				P007-18C	PB V SYNC	14	AV DATA IN 2	P004-12A				AVDAIN2
COMP_SY				P007-19A	PB COMP SYNC	15	AV DATA IN 1	P004-15C				-AVDAIN1
PB_VITC				P007-19B	PB VITC	16	AV DATA IN 1	P004-14C				AVDAIN1
SPI_VD				P007-18B	SPI VD	17	AV DATA IN 0	P004-15B				-AVDAIN0
SPI_HD				P007-18A	SPI HD	18	AV DATA IN 0	P004-14B				AVDAIN0
CAP_FG1				P007-16B	CAP FG1	19	AV CLK I	P004-15A				-AV_CLKI
CAP_DIR				P007-16C	CAP DIR	20	AV CLK I	P004-14A				AV_CLKI
FSA				P003-13B	FSA	21	AV HD	P004-19A				-AV_HD
FSD				P003-23A	FSD	22	AV HD	P004-18A				AV_HD
ST3				P003-31C	ST3	23	AV CF	P004-17C				AV_CF
ST2				P003-31B	ST2	24	AV FRM	P004-17B				AV_FRM
ST1				P003-31A	ST1	25	AV LALT	P004-16C				AV_LALT
ST0				P003-30A	ST0	26	AV SC	P004-17A				-AV_SC
WCK			P001-23C	P003-21C	WCK	27	AV SC	P004-16A				AV_SC
+BCK			P001-23B	P003-23B	BCK	28	AV CS	P004-9A				-AV_CS
FS128				P003-22C	FS128	29	AV CS	P004-8A				AV_CS
PB_RST			P005-5C	P003-5C	PB RST	30	AV VS	P004-16B				AV_VS

L MOTHER (P009, P010, P012, P014, P015,

P009		FROM / TO
1	GND (A)	
2	+12V (A)	
3	-12V (A)	
4	GND (A)	
5	+8V (un)	
6	-8V (un)	
7	+15V (un)	
8	-15V (un)	

P010		FROM / TO
1	CH1 LINE OUT	P001-15A
2	CH1 LINE OUT GND	P001-16A
3	CH2 LINE OUT	P001-15B
4	CH2 LINE OUT GND	P001-16B
5	CH3 LINE OUT	P001-15C
6	CH3 LINE OUT GND	P001-16C
7	CH4 LINE OUT	P001-17A
8	CH4 LINE OUT GND	P001-18A
9	MONI L OUT	P001-17B
10	MONI L OUT GND	P001-18B
11	MONI R OUT	P001-17C
12	MONI R OUT GND	P001-18C

P012		FROM / TO
1	REC INPUT VIDEO	P002-16A
2	REC INPUT VIDEO GND	P002-17A
3	RF WFM	P002-16B
4	RF WFM GND	P002-17B
5	WF CTL	P002-16C
6	WF CTL GND	P002-17C
7	4fsc CLK	P004-6A
8	4fsc CLK GND	P004-7A

P014		FROM / TO
1	VIDEO 1 OUT	P002-18A
2	VIDEO 1 OUT GND	P002-19A
3	VIDEO 2 OUT	P002-18B
4	VIDEO 2 OUT GND	P002-19B
5	VIDEO 3 OUT	P002-18C
6	VIDEO 3 OUT GND	P002-19C
7	WFM OUT	P002-20A
8	WFM OUT GND	P002-21A

P015		FROM / TO
1	CH1 LINE IN H	P001-10C
2	CH1 LINE IN C	P001-10B
3	CH1 LINE IN GND	P001-10A
4	CH2 LINE IN H	P001-11C
5	CH2 LINE IN C	P001-11B
6	CH2 LINE IN GND	P001-11A
7	CH3 LINE IN H	P001-12C
8	CH3 LINE IN C	P001-12B
9	CH3 LINE IN GND	P001-12A
10	CH4 LINE IN H	P001-13C
11	CH4 LINE IN C	P001-13B
12	CH4 LINE IN GND	P001-13A

L MOTHER (P009, P010, P012, P014, P015, P017, P018, P021, P022) SCHEMATIC DIAGRAM (6/7)

		FROM / TO			
					GND
					BLK_SYNC
					PB_H_SW
					PBTP_FRM
					FV/8
					FV/4
P004-19B					FV/2
					90/100HZ
)6-13B					AUDAIN7
)06-13A					AUDAIN6
P006-12C					AUDAIN5
P006-12B					AUDAIN4
)6-12A					AUDAIN3
)6-11C					AUDAIN2
P006-11B					AUDAIN1
P006-11A					AUDAIN0
					FILD
)3-7C					PB_5F
					VALID_F
					MUTE_34
					MUTE_12
					ST_FLG
					ST_0
					PBD_34
					PBD_12
					DSD_L
					DSD_3
					DSD_1
					ASD_3
					ASD_1

		FROM / TO			
					GND
					-AVDAIN7
					AVDAIN7
					-AVDAIN6
					AVDAIN6
					-AVDAIN5
					AVDAIN5
					-AVDAIN4
					AVDAIN4
					-AVDAIN3
					AVDAIN3
					-AVDAIN2
					AVDAIN2
					-AVDAIN1
					AVDAIN1
					-AVDAIN0
					AVDAIN0
					-AV_CLKI
					AV_CLKI
					-AV_HD
					AV_HD
					AV_CF
					AV_FRM
					AV_LALT
					-AV_SC
					AV_SC
					-AV_CS
					AV_CS
					AV_VS

P009		FROM / TO				
1	GND (A)					GND
2	+12V (A)					+12V (A)
3	-12V (A)					-12V (A)
4	GND (A)					GND
5	+8V (un)					+8V (UN)
6	-8V (un)					-8V (UN)
7	+15V (un)					+15V (UN)
8	-15V (un)					-15V (UN)

P010		FROM / TO				
1	CH1 LINE OUT	P001-15A				CH1_OUT
2	CH1 LINE OUT GND	P001-16A				CH1OUT_G
3	CH2 LINE OUT	P001-15B				CH2_OUT
4	CH2 LINE OUT GND	P001-16B				CH2OUT_G
5	CH3 LINE OUT	P001-15C				CH3_OUT
6	CH3 LINE OUT GND	P001-16C				CH3OUT_G
7	CH4 LINE OUT	P001-17A				CH4_OUT
8	CH4 LINE OUT GND	P001-18A				CH4OUT_G
9	MONI L OUT	P001-17B				MONI_L_O
10	MONI L OUT GND	P001-18B				MONI_L_G
11	MONI R OUT	P001-17C				MONI_R_O
12	MONI R OUT GND	P001-18C				MONI_R_G

P012		FROM / TO				
1	REC INPUT VIDEO	P002-15A				REC_INPU
2	REC INPUT VIDEO GND	P002-17A				REC_V_G
3	RF WFM	P002-15B				RF_WFM
4	RF WFM GND	P002-17B				RF_WFM_G
5	WF CTL	P002-15C				WF_CTL
6	WF CTL GND	P002-17C				WF_CTL_G
7	4fsc CLK	P004-6A				4FSC
8	4fsc CLK GND	P004-7A				4FSC_G

P014		FROM / TO				
1	VIDEO 1 OUT	P002-18A				VIDEO1_O
2	VIDEO 1 OUT GND	P002-19A				VIDEO1_G
3	VIDEO 2 OUT	P002-18B				VIDEO2_O
4	VIDEO 2 OUT GND	P002-19B				VIDEO2_G
5	VIDEO 3 OUT	P002-18C				VIDEO3_O
6	VIDEO 3 OUT GND	P002-19C				VIDEO3_G
7	WFM OUT	P002-20A				WFM_OUT
8	WFM OUT GND	P002-21A				WFM_GND

P015		FROM / TO				
1	CH1 LINE IN H	P001-10C				CH1_IN_H
2	CH1 LINE IN C	P001-10B				CH1_IN_C
3	CH1 LINE IN GND	P001-10A				CH1_IN_G
4	CH2 LINE IN H	P001-11C				CH2_IN_H
5	CH2 LINE IN C	P001-11B				CH2_IN_C
6	CH2 LINE IN GND	P001-11A				CH2_IN_G
7	CH3 LINE IN H	P001-12C				CH3_IN_H
8	CH3 LINE IN C	P001-12B				CH3_IN_C
9	CH3 LINE IN GND	P001-12A				CH3_IN_G
10	CH4 LINE IN H	P001-13C				CH4_IN_H
11	CH4 LINE IN C	P001-13B				CH4_IN_C
12	CH4 LINE IN GND	P001-13A				CH4_IN_G

P017		FROM / TO				
1	DV DATA IN 7	P004-2C				DVDAIN7
2	DV DATA IN 6	P004-2B				DVDAIN6
3	DV DATA IN 5	P004-2A				DVDAIN5
4	DV DATA IN 4	P004-3C				DVDAIN4
5	DV DATA IN 3	P004-3B				DVDAIN3
6	DV DATA IN 2	P004-3A				DVDAIN2
7	DV DATA IN 1	P004-4C				DVDAIN1
8	DV DATA IN 0	P004-4B				DVDAIN0
9	DV DATA IN -1	P004-4A				DVDAIN-1
10						
11	DV CLK I	P004-5A				DV_CLKI
12	DV CLK I	P004-5B				-DV_CLKI
13	+5V (D)					+5V (D1)
14	GND (D)					GND
15	-5V (D)					-5V (D)

P018		FROM / TO				
1	CH0 REC	P004-18C				CH0_REC
2	CH1 REC	P004-19C				CH1_REC
3	CH0 REC D	P004-20A				CH0REC_D
4	CH0 REC D	P004-21A				-CH0_R_D
5	CH0 REC D GND	P004-22A				CH0_RECG
6	CH1 REC D	P004-20B				CH1_RECD
7	CH1 REC D	P004-21B				-CH1_R_D
8	CH1 REC GND	P004-22B				CH1_RECG
9	REC CLK	P004-20C				REC_CLK
10	REC CLK	P004-21C				-REC_CLK
11	REC CLK GND	P004-22C				REC_CLKG
12	FRY ERASE	P004-18B				FRYERASE
13	TEST EE2	P005-17A	P024-2A			TEST_EE2

P021		FROM / TO				
1	PB DATA CH0	P005-18A				+P_DATA0
2	PB DATA CH0	P005-18B				-P_DATA0
3	PB DATA CH0 GND	P005-18C				P_DATA0G
4	PB CLOCK CH0	P005-19A				+P_CLOK0
5	PB CLOCK CH0	P005-19B				-P_CLOK0
6	PB CLOCK CH0 GND	P005-19C				P_CLOK0G
7	PB DATA CH1	P005-20A				+P_DATA1
8	PB DATA CH1	P005-20B				-P_DATA1
9	PB DATA CH1 GND	P005-20C				P_DATA1G
10	PB CLOCK CH1	P005-21A				+P_CLOK1
11	PB CLOCK CH1	P005-21B				-P_CLOK1
12	PB CLOCK CH1 GND	P005-21C				P_CLOK1G

P022		FROM / TO				
1	SYNC + CH0	P005-11A				SYNC+0
2	SYNC - CH0	P005-12A				SYNC-0
3	GND					GND
4	SYNC + CH1	P005-11B				SYNC+1
5	SYNC - CH1	P005-12B				SYNC-1
6	GND					GND

C

B

A

3 1 2 3

L MOTHER (P026, P027, P028, P029, P032, P034, P035, P036) SCHEMATIC DIAGRAM (7/7)

C

B

A

P026		FROM / TO				
1	SYNC OUT	P007-9C				CMPSY
2	GND (A)	P007-10C				GND_A
3	SC_OUT	NC				SC_OUT
4	GND (A)	NC				GND

P027		FROM/TO				
1	DV DATA OUT 7	P008-15C				DVDATA7
2	DV DATA OUT $\overline{7}$	P008-16C				-DVDATA7
3	DV DATA OUT 6	P008-15B				DVDATA6
4	DV DATA OUT $\overline{6}$	P008-16B				-DVDATA6
5	DV DATA OUT 5	P008-15A				DVDATA5
6	DV DATA OUT $\overline{5}$	P008-16A				-DVDATA5
7	DV DATA OUT 4	P008-17C				DVDATA4
8	DV DATA OUT $\overline{4}$	P008-18C				-DVDATA4
9	DV DATA OUT 3	P008-17B				DVDATA3
10	DV DATA OUT $\overline{3}$	P008-18B				-DVDATA3

P028		FROM / TO				
1	DV DATA OUT 2	P008-17A				DVDATA2
2	DV DATA OUT $\overline{2}$	P008-18A				-DVDATA2
3	DV DATA OUT 1	P008-19C				DVDATA1
4	DV DATA OUT $\overline{1}$	P008-20C				-DVDATA1
5	DV DATA OUT 0	P008-19B				DVDATA0
6	DV DATA OUT $\overline{0}$	P008-20B				-DVDATA0
7	DV DATA OUT -1	P008-19A				DVDATA-1
8	DV DATA OUT $\overline{-1}$	P008-20A				-DVDA-1
9	DV DATA OUT -2	P008-21C				DVDATA-2
10	DV DATA OUT $\overline{-2}$	P008-22C				-DVDA-2
11	DV CLK 0	P008-21B				DV_CLK0
12	$\overline{\text{DV CLK 0}}$	P008-22B				-DV_CLK0

P029		FROM / TO				
1	REF VIDEO IN	P007-20A				REF_V_IN
2	REF VIDEO IN GND	P007-21A				REF_V_G
3	BLACK BURST	P007-22A				BLA_BUR
4	BLACK BURST GND	P007-23A				BLA_GND
5	EXT CF IN	P007-20B	P004-9C			EXT_CF
6	EXT CF IN GND	P007-21B				EXT_CF_G
7	CF PULSE	P007-22B				CF_PULSE
8	CF PULSE GND	P007-23B				CF_P_GND

P032			
1	DIF CK	P003-5A	
2	$\overline{\text{DIF CK}}$	P003-6A	
3	DIF CK GND		
4	DB CK	P003-20B	
5	$\overline{\text{DB CK}}$	P003-20C	
6	DB CK GND		

P034			
1	-5V (D)		
2	GND (D)		
3	+5V (D)		
4	+5V (D)		
5	+5V (D)		
6	+5V (D)		
7	GND (D)		
8	GND (D)		
9	GND (D)		
10	GND (D)		

P035			
1	-5V (D)		
2	+5V (D)		
3	GND (D)		

P036			
1	TXD	P007-20C	
2	$\overline{\text{TXD}}$	P007-21C	
3	RXD	P007-22C	
4	$\overline{\text{RXD}}$	P007-23C	
5	GND (D)		

1 2 3 4

, P032, P034, P035, P036) SCHEMATIC DIAGRAM (7/7)

FROM / TO				
-9C				CMPSY
-[illegible]C				GND_A
				SC_OUT
				GND

FROM/TO				
-[illegible]C				DVDATA7
-[illegible]C				-DVDATA7
-15B				DVDATA6
-[illegible]B				-DVDATA6
-[illegible]A				DVDATA5
-16A				-DVDATA5
-17C				DVDATA4
-[illegible]C				-DVDATA4
-17B				DVDATA3
-18B				-DVDATA3

FROM / TO				
-[illegible]A				DVDATA2
-18A				-DVDATA2
-[illegible]C				DVDATA1
-[illegible]C				-DVDATA1
-19B				DVDATA0
-[illegible]B				-DVDATA0
-[illegible]A				DVDATA-1
-20A				-DVDA-1
-21C				DVDATA-2
-[illegible]C				-DVDA-2
-21B				DV_CLKO
-22B				-DV_CLKO

FROM / TO				
-[illegible]A				REF_V_IN
-21A				REF_V_G
-[illegible]A				BLA_BUR
-[illegible]A				BLA_GND
-20B	P004-9C			EXT_CF
-21B				EXT_CF_G
-[illegible]B				CF_PULSE
-23B				CF_P_GND

P032		FROM / TO				
1	DIF CK	P003-5A				DIFCK
2	$\overline{\text{DIF CK}}$	P003-6A				-DIFCK
3	DIF CK GND					GND
4	DB CK	P003-20B				DBCK
5	$\overline{\text{DB CK}}$	P003-20C				-DBCK
6	DB CK GND					GND

P034		FROM/TO				
1	-5V (D)					-5V (D)
2	GND (D)					GND
3	+5V (D)					+5V (D1)
4	+5V (D)					+5V (D2)
5	+5V (D)					+5V (D3)
6	+5V (D)					+5V (D4)
7	GND (D)					GND
8	GND (D)					GND
9	GND (D)					GND
10	GND (D)					GND

P035		FROM / TO				
1	-5V (D)					-5V (D)
2	+5V (D)					+5V (D1)
3	GND (D)					GND

P036		FROM / TO				
1	TXD	P007-20C				+TXD
2	$\overline{\text{TXD}}$	P007-21C				-TXD
3	RXD	P007-22C				+RXD
4	$\overline{\text{RXD}}$	P007-23C				-RXD
5	GND (D)					GND

2 3 4 5

S1, S2 EQUALIZER CH0, CH1 (INTER FIX FL/POW ENV. DET SCHEMATIC DIAGRAM (1/6)

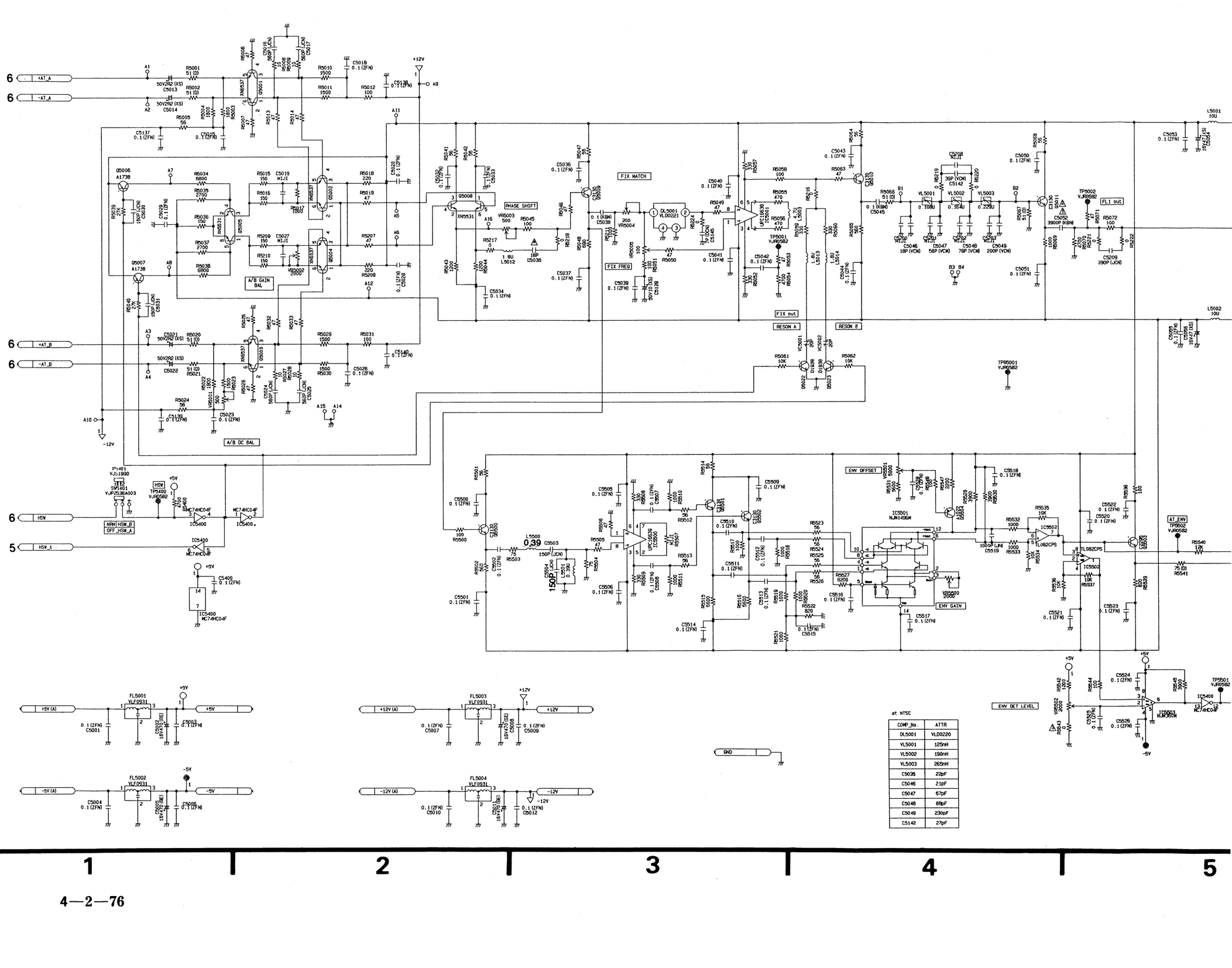

COMP_No.	ATTR
DL5001	VLD0220
VL5001	125nH
VL5002	190nH
VL5003	265nH
C5035	22pF
C5046	21pF
C5047	67pF
C5048	88pF
C5049	230pF
C5142	27pF

ENV. DET SCHEMATIC DIAGRAM (1/6)

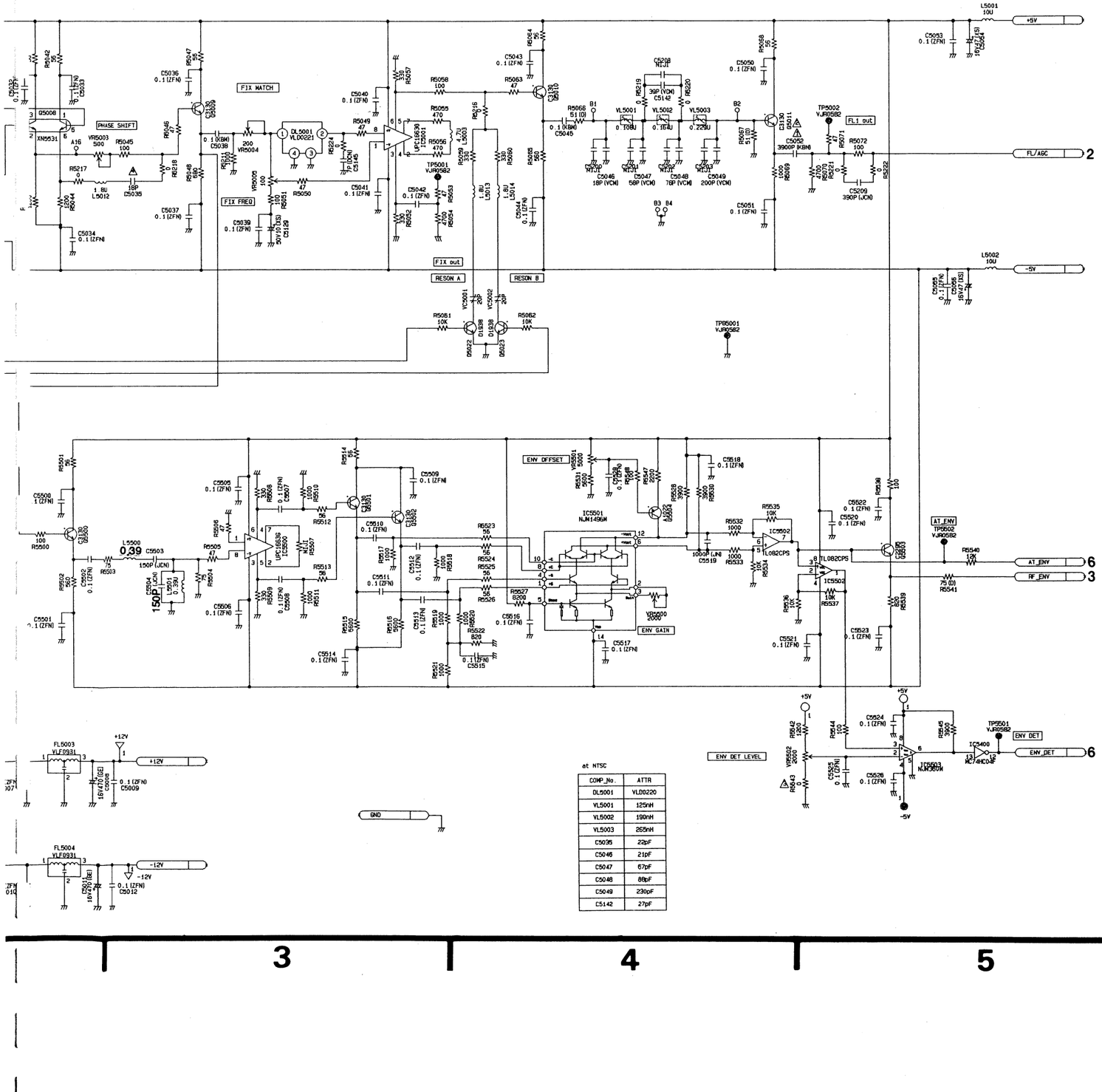

S1, S2 EQUALIZER CH0, CH1 (AGC, AFC) SCHEMATIC DIAGRAM (2/6)

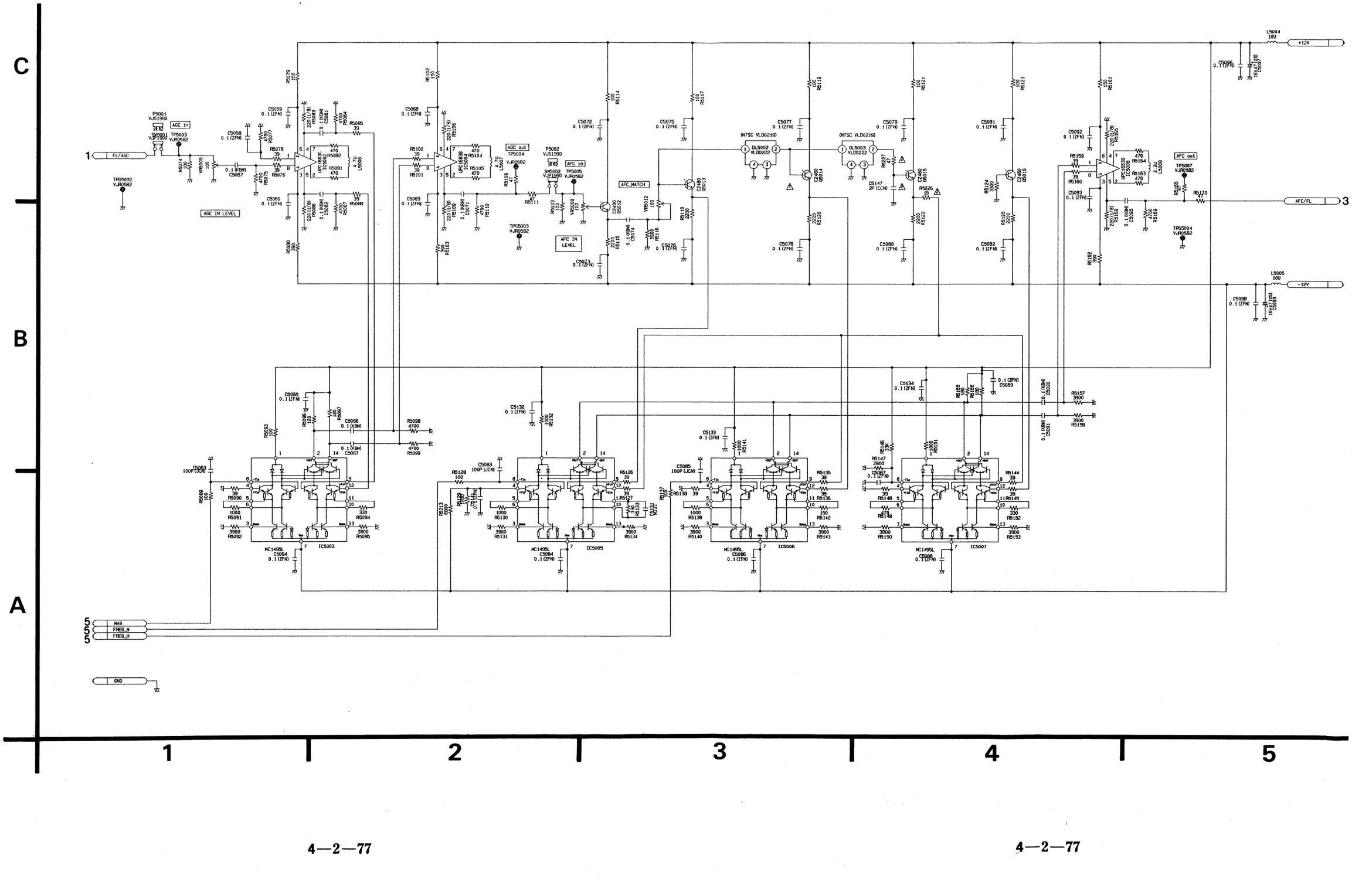

4—2—77

4—2—77

S1, S2 EQUALIZER CH0, CH1 (2nd FILTER QUANTIZATION) SCHEMATIC DIAGRAM (3/6)

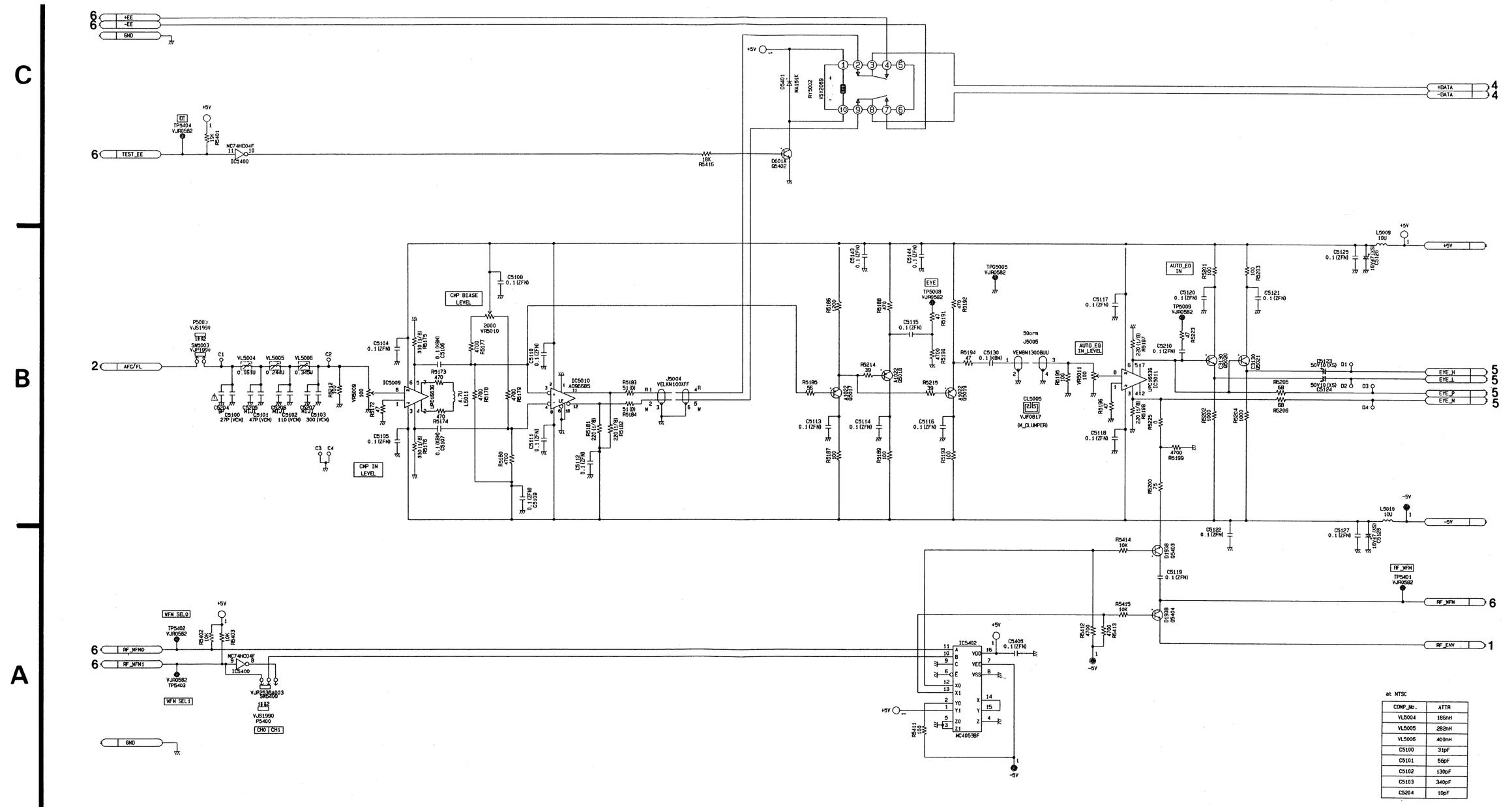

at NTSC

COMP_No.	ATTR
VL5004	186nH
VL5005	282nH
VL5006	400nH
C5100	31pF
C5101	56pF
C5102	130pF
C5103	340pF
C5204	10pF

4—2—78

S1, S2 EQUALIZER CH0, CH1 (PLL DISCRIMINATION) SCHEMATIC DIAGRAM (4/6)

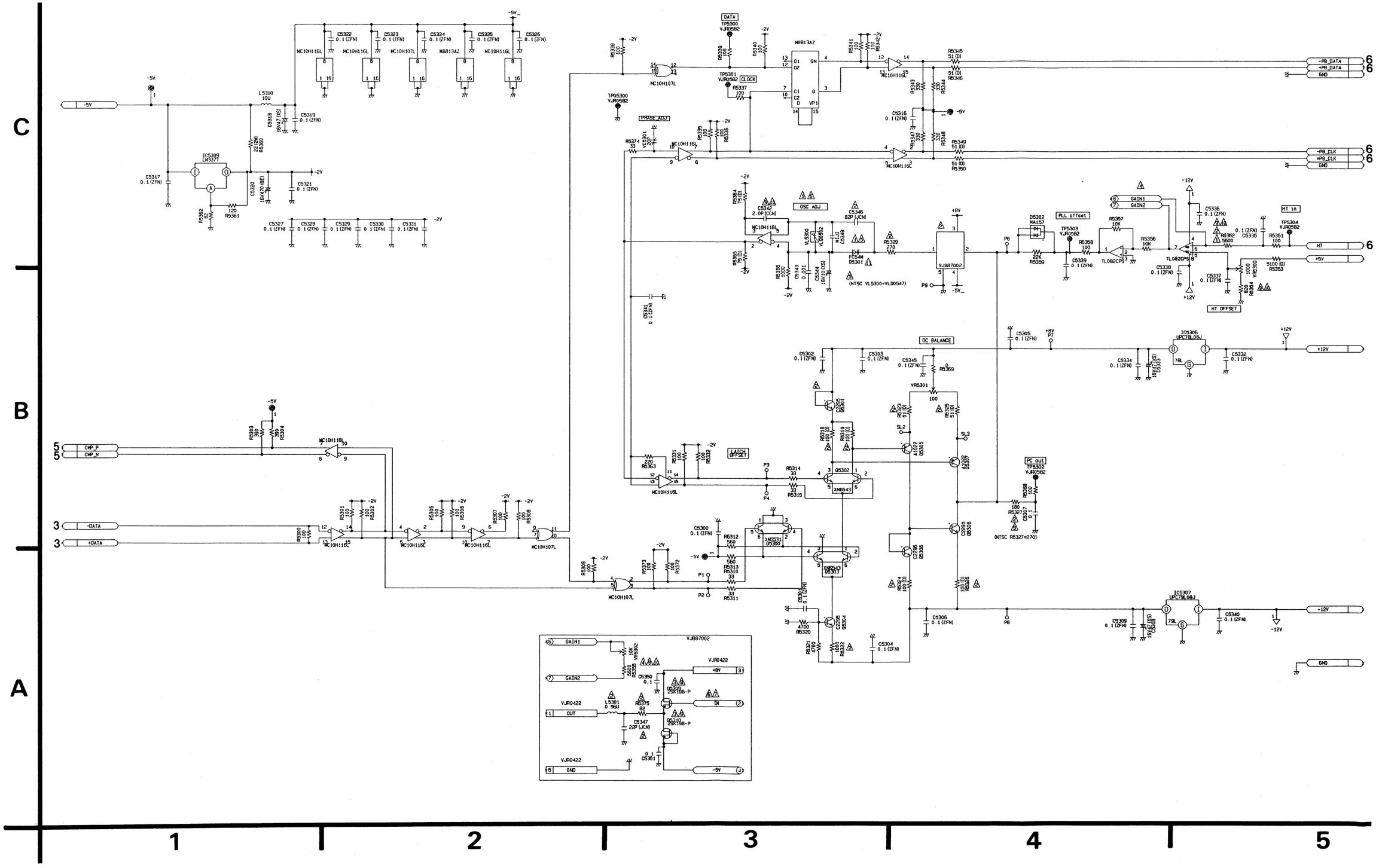
C
B
A
1
2
3
4
5
-5V
-2V
+8V
-12V
+12V
+5V
GND
L5300 10U
C5322 0.1 (ZFN)
C5323 0.1 (ZFN)
C5324 0.1 (ZFN)
C5325 0.1 (ZFN)
C5326 0.1 (ZFN)
C5318 16V47 (KS)
C5319 0.1 (ZFN)
R5360 22 (2W)
IC5309 LM337T
C5317 0.1 (ZFN)
C5320 16V470 (BE)
C5321 0.1 (ZFN)
R5362 1K
R5361 120
C5327 0.1 (ZFN)
C5328 0.1 (ZFN)
C5329 0.1 (ZFN)
C5330 0.1 (ZFN)
C5331 0.1 (ZFN)
CMP_P
CMP_N
-DATA
+DATA
MC10H116L
MC10H107L
MB813AZ
DATA
CLOCK
PHASE_ADJ
OSC ADJ
LATCH RESET
DC BALANCE
PLL offset
HT in
HT
HT OFFSET
GAIN1
GAIN2
PC out
TP5300 VJA0582
TP5301 VJA0582
TP5303 VJA0582
TP5304 VJA0582
-PB_DATA
+PB_DATA
-PB_CLK
+PB_CLK
VJB87002
VJA0422
VL5300 VL00547
VL5301 VL00552
(NTSC VL5300=VL00547)
(NTSC R5327=270)
IC5306 UPC78L08J
IC5307 UPC79L08J
Q5300 2SK19B-P
Q5310 2SK19B-P
Q5302 XN6543
XN6531 Q5300
XN6543 Q5301
C2295 Q5305
C2295 Q5306
A1022 Q5304
C2296 Q5304
C5342 2.0P (CCN)
C5346 82P (JCN)
C5347 22P (JCN)
C5348 FC54H 05301
C5343 0.001
C5344 16V1 (KS)
C5349 0.1
C5350 0.1
C5351 100
C5352 5900
C5353 5100 (D)
C5354 1000
C5355 1000
C5356 10K
C5357 10K
C5358 100
C5359 22K
C5360 0.1
C5361 0.1
C5362 0.1
C5363 0.1
C5364 75 (D)
C5365 75 (D)
C5366 1000
C5367 10K
C5368 100
C5369 0
C5370 100
C5371 100
C5372 100
C5373 100
C5374 100
C5375 2
C5376 100
C5377 100
C5378 100
C5379 100
C5380 100
C5381 100
C5382 100
C5383 100
C5384 100
C5385 100
C5386 100
C5387 100
C5388 100
C5389 100
C5390 100
C5391 100
C5392 100
C5393 100
C5394 100
C5395 100

S1, S2 EQUALIZER CH0, CH1 (ADAPTIVE EQ) SCHEMATIC DIAGRAM (5/6)

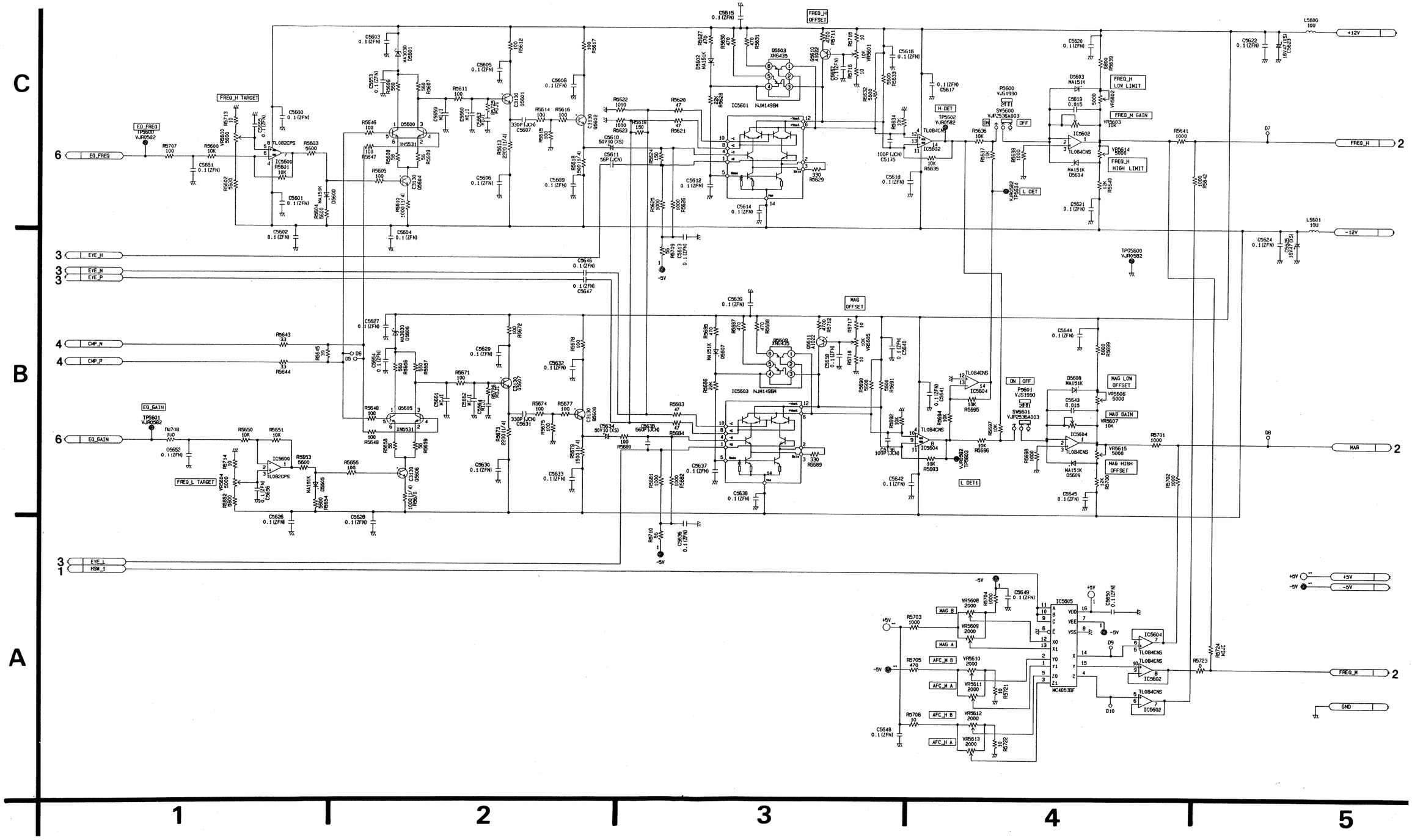

4—2—80

NTSC

S1, S2 WAVEFORMS NTSC

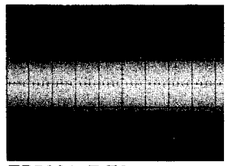
TP5001 E-E2
20mV/20µsec. div.

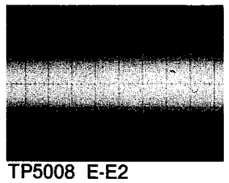
TP5008 E-E2
20mV/20µsec. div.

TP5304 E-E2
20mV/20µsec. div.

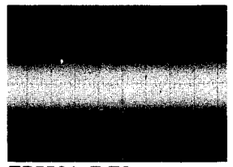
TP5501 E-E2
20mV/20µsec. div.

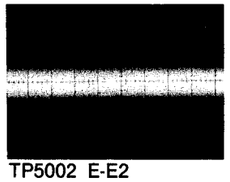
TP5002 E-E2
20mV/20µsec. div.

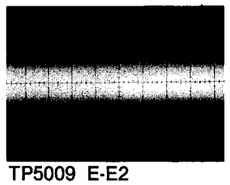
TP5009 E-E2
20mV/20µsec. div.

TP5400 E-E2
2V/5msec. div.

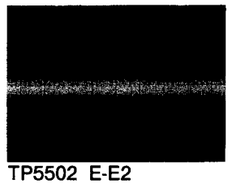
TP5502 E-E2
20mV/20µsec. div.

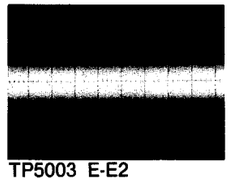
TP5003 E-E2
20mV/20µsec. div.

TP5300 E-E2
500mV/200µsec. div.

TP5401 E-E2
50mV/20µsec. div.

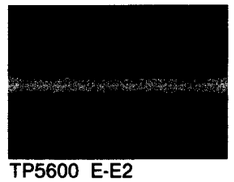
TP5600 E-E2
20mV/20µsec. div.

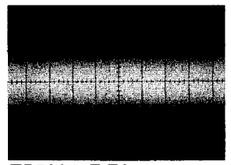
TP5004 E-E2
20mV/20µsec. div.

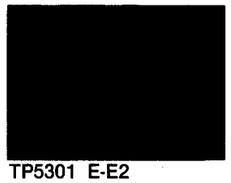
TP5301 E-E2
500mV/100µsec. div.

TP5402 E-E2
20mV/20µsec. div.

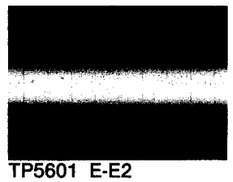
TP5601 E-E2
20mV/10µsec. div.

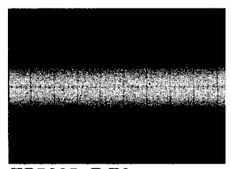
TP5005 E-E2
20mV/20µsec. div.

TP5302 E-E2
20mV/50µsec. div.

TP5403 E-E2
20mV/20µsec. div.

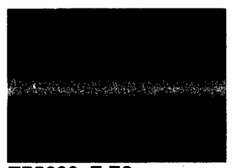
TP5602 E-E2
500mV/20µsec. div.

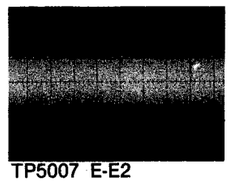
TP5007 E-E2
50mV/20µsec. div.

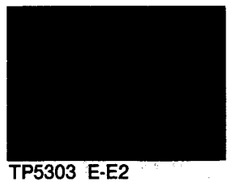
TP5303 E-E2
20mV/50µsec. div.

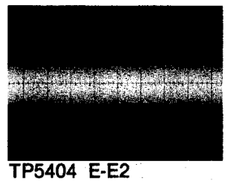
TP5404 E-E2
50mV/20µsec. div.

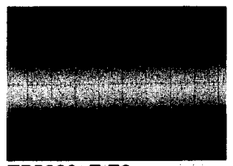
TP5603 E-E2
20mV/20µsec. div.

S1, S2 WAVEFORMS NTSC

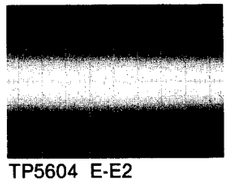
TP5604 E-E2
20mV/20µsec. div.

S1 EQUALIZER CH0, CH1 (CONNECTOR) SCHEMATIC DIAGRAM (6/6) [S MOTHER (P201, P202) SCHEMATIC DIAGRAM (1/14) FOR

P201	A	S 1 FROM / TO			
1	GND (D)				
2					
3					
4	AT CH0 A GND	P221-3	P201-6C	P203-8A	P203-10C
5	AT CH0 A	P221-1	P203-9A		
6	AT CH0 B GND	P221-6	P201-8C	P203-10A	P203-12C
7	AT CH0 B	P221-4	P203-11A		
8	AT GND				
9					
10					
11					
12	REC GND				
13	REC DATA CH0	P502'-1			
14	REC DATA CH0 GND	P502'-3	P201-12C		
15	REC DATA CH1	P502'-4			
16	REC DATA CH1 GND	P502'-6	P201-14C		
17	REC CLK	P502'-7			
18	REC CLK GND	P502'-9	P201-16C		
19	CH1 REC	P503'-3			
20	TEST EE2	P502'-11	P203-20A	P245-2B	
21					
22					
23					
24	REC ENV CH0	P235-1	P210-19B	P208-18C	
25	REC ENV CH0 GND	P235-2	P210-19C	P208-19C	
26					
27					
28	-5V (D)				
29	+5V (D)				
30	+5V (D)				
31	GND (D)				
32	GND (D)				

TEST_EE 3

P201	B	S 1 FROM / TO			
	GND (D)				
	GND				
	GND				
	GND				
	GND				
	GND				
	GND				
	GND				
	GND				
	GND				
	GND				
	GND				
	GND				
	GND				
	GND				
	H SW CH1	P203-22B	P224-4		
	H SW CH0	P203-23B	P219-4		
	SER H SW	P256-1	P210-18A	P214-19A	
	SER H SW GND	P256-2	P210-18B		
	-5V (D)				
	+5V (D)				
	+5V (D)				
	GND (D)				
	GND (D)				

HSW 1

P201	C	
1	GND (D)	
2		
3		
4	AT GND	
5	AT/CNF CH0 A	P221-2
6	AT/CNF CH0 A GND	P221-3
7	AT/CNF CH0 B	P221-5
8	AT/CNF CH0 B GND	P221-6
9		
10		
11		
12	REC DATA CH0 GND	P201-14A
13	REC DATA CH0	P502'-2
14	REC DATA CH1 GND	P201-16A
15	REC DATA CH1	P502'-5
16	REC CLK GND	P201-18A
17	REC CLK	P502'-8
18	GND	
19	CH0 REC	P503'-1
20	FRY ERASE	P502'-10
21		
22		
23		
24	REC ENV CH1	P235-3
25	REC ENV CH1 GND	P235-4
26		
27		
28	-5V (D)	
29	+5V (D)	
30	+5V (D)	
31	GND (D)	
32	GND (D)	

P202	A	S 1 FROM / TO			
1	RF WFM GND	P204-1A	P249-4	P204-1B	P202-1B
2	ENV CH0	P208-2A	P204-3A		
3					
4	E-E CH0 GND	P219-3	P202-6C	P204-6A	P204-8C
5	E-E CH0	P219-1	P204-7A		
6	E-E CH1 GND	P204-4A	P204-6C	P224-3	P202-8C
7	E-E CH1	P204-5A	P224-1		
8	E-E GND				
9					
10					
11					
12					
13					
14	ENV DET CH0	P245-4B	P204-9A		
15	PB DATA CH0 GND	P220-3	P202-17C	P204-11C	P204-10A
16	PB DATA CH0	P220-1	P204-11A		
17	PB CLOCK CH0 GND	P220-6	P202-19C	P204-13C	P204-12A
18	PB CLOCK CH0	P220-4	P204-13A		
19	PB GND				
20	HT SPEED GND	P210-19A	P204-20A		
21	PB MODE	P214-21A	P204-21A		
22	REC MODE	P256-4	P214-20A		
23	EQ GAIN CH0	P214-22B			
24	TEST MODE	P256-3	P214-21B		
25	-5V (A)				
26	+5V (A)				
27	-12V (A)				
28	+12V (A)				
29	+15V (un)				
30	+8V (un)				
31	GND (A)				
32	GND (A)				

AT_ENV 1
ENV_DET 1
EQ_GAIN 5
-5V (A)
+5V (A)
-12V (A)
+12V (A)
GND

P202	B	S 1 FROM / TO			
	RF WFM GND	P204-1A	P249-4	P202-1A	P204-1B
	GND				
	GND				
	GND				
	GND				
	GND				
	GND				
	GND				
	GND				
	GND				
	GND				
	GND	P204-19B			
	GND				
	REC CURR CH1	P240-2	P214-23A		
	REC CURR CH0	P240-1	P214-22A		
	-5V (A)				
	+5V (A)				
	-12V (A)				
	+12V (A)				
	+15V (un)				
	+8V (un)				
	GND (A)				
	GND (A)				

-5V (A)
+5V (A)
-12V (A)
+12V (A)
GND

P202	C	
1	RF WFM	P204-1C
2	ENV CH0 GND	P208-3A
3		
4	E-E GND	
5	E-E CH0	P219-2
6	E-E CH0 GND	P219-3
7	E-E CH1	P204-5C
8	E-E CH1 GND	P204-6C
9		
10		
11		
12		
13		
14		
15	PB GND	
16	PB DATA CH0	P220-2
17	PB DATA CH0 GND	P220-3
18	PB CLOCK CH0	P220-5
19	PB CLOCK CH0 GND	P220-6
20	HT SPEED	P210-18C
21	RF WFM SELECT 0	P214-20C
22	RF WFM SELECT 1	P214-21C
23	EQ FREQ CH0	P214-22C
24		
25	-5V (A)	
26	+5V (A)	
27	-12V (A)	
28	+12V (A)	
29	+15V (un)	
30	+8V (un)	
31	GND (A)	
32	GND (A)	

C
B
A
1
2
3
4
5

EMATIC DIAGRAM (6/6) [S MOTHER (P201, P202) SCHEMATIC DIAGRAM (1/14) FOR S1]

P201	S 1			
B	FROM / TO			
GND (D)				
GND				
GND				
GND				
GND				
GND				
GND				
GND				
GND				
GND				
GND				
GND				
GND				
GND				
H SW CH1	P203-22B	P224-4		
H SW CH0	P203-23B	P219-4		
SER H SW	P256-1	P210-18A	P214-19A	
SER H SW GND	P256-2	P210-18B		
-5V (D)				
+5V (D)				
+5V (D)				
GND (D)				
GND (D)				

TEST_EE 3

HSW 1

P201	S 1			
	C	FROM / TO			
1	GND (D)				
2					
3					
4	AT GND				
5	AT/CNF CH0 A	P221-2			P203-9C
6	AT/CNF CH0 A GND	P221-3	P201-4A	P203-8A	P203-10C
7	AT/CNF CH0 B	P221-5			P203-11C
8	AT/CNF CH0 B GND	P221-6	P201-6A	P203-10A	P203-12C
9					
10					
11					
12	REC DATA CH0 GND	P201-14A	P502'-3		
13	REC DATA CH0	P502'-2			
14	REC DATA CH1 GND	P201-16A	P502'-6		
15	REC DATA CH1	P502'-5			
16	REC CLK GND	P201-18A	P502'-9		
17	REC CLK	P502'-8			
18	GND				
19	CH0 REC	P503'-1			
20	FRY ERASE	P502'-10			
21					
22					
23					
24	REC ENV CH1	P235-3	P210-22A	P208-20C	
25	REC ENV CH1 GND	P235-4	P210-23A	P208-21C	
26					
27					
28	-5V (D)				
29	+5V (D)				
30	+5V (D)				
31	GND (D)				
32	GND (D)				

J5001 VEE7219 — CN5001 VJP1230R — VJP1230H

+AT_A 1
-AT_A 1

J5002 VEE7220 — VJP1230G — CN5002 VJP1230G

-AT_B 1
+AT_B 1

P202	S 1			
B	FROM / TO			
RF WFM GND	P204-1A	P249-4	P202-1A	P204-1B
GND				
GND				
GND				
GND				
GND				
GND				
GND				
GND				
GND				
GND				
GND	P204-19B			
GND				
REC CURR CH1	P240-2	P214-23A		
REC CURR CH0	P240-1	P214-22A		
-5V (A)				
+5V (A)				
-12V (A)				
+12V (A)				
+15V (un)				
+8V (un)				
GND (A)				
GND (A)				

AT_ENV 1

ENV_DET 1

EQ_GAIN 5

-5V (A)
+5V (A)
-12V (A)
+12V (A)

GND

-5V (A)
+5V (A)
-12V (A)
+12V (A)

GND

P202	S 1			
	C	FROM / TO			
1	RF WFM	P204-1C	P249-3		
2	ENV CH0 GND	P208-3A	P204-3A		
3					
4	E-E GND				
5	E-E CH0	P219-2	P204-7C		
6	E-E CH0 GND	P219-3	P202-4A	P204-6A	P204-8C
7	E-E CH1	P204-5C	P224-2		
8	E-E CH1 GND	P204-6C	P202-6A	P204-4A	P224-3
9					
10					
11					
12					
13					
14					
15	PB GND				
16	PB DATA CH0	P220-2	P204-10C		
17	PB DATA CH0 GND	P220-3	P202-15A	P204-11C	P204-10A
18	PB CLOCK CH0	P220-5	P204-12C		
19	PB CLOCK CH0 GND	P220-6	P202-17A	P204-13C	P204-12A
20	HT SPEED	P210-18C	P204-20C		
21	RF WFM SELECT 0	P214-20C	P204-21C		
22	RF WFM SELECT 1	P214-21C	P204-22C		
23	EQ FREQ CH0	P214-22C	P204-24C		
24					
25	-5V (A)				
26	+5V (A)				
27	-12V (A)				
28	+12V (A)				
29	+15V (un)				
30	+8V (un)				
31	GND (A)				
32	GND (A)				

RF_WFM 3

J5400 VELKN110XFF

+EE 3
-EE 3
GND

J5300 VELKN140XFF

+PB_DATA 4
-PB_DATA 4
GND

J5301 VELKN140XFF

+PB_CLK 4
-PB_CLK 4
GND
HT 4
RF_WFM0 3
RF_WFM1 3
EQ_FREQ 5

-5V (A)
+5V (A)
-12V (A)
+12V (A)

GND

2 3 4 5 6

S2 EQUALIZER CH0, CH1 (CONNECTOR) SCHEMATIC DIAGRAM (6/6) [S MOTHER (P203, P204) SCHEMATIC DIAGRAM (2/14) FO

P203		S 2			
	A	FROM / TO			
1	GND (D)				
2					
3					
4	AT CH1 A GND	P221-9	P203-6C		
5	AT CH1 A	P221-7			
6	AT CH1 B GND	P221-12	P203-8C		
7	AT CH1 B	P221-10			
8	AT CH0 A GND	P201-4A	P221-3	P201-6C	P203-10C
9	AT CH0 A	P201-5A	P221-1		
10	AT CH0 B GND	P201-6A	P221-6	P201-8C	P203-12C
11	AT CH0 B	P201-7A	P221-4		
12	AT GND				
13					
14					
15					
16					
17					
18					
19					
20	TEST EE2	P201-20A	P245-2B	P502-11	
21					
22					
23					
24					
25					
26					
27					
28	-5V (D)				
29	+5V (D)				
30	+5V (D)				
31	GND (D)				
32	GND (D)				

TEST_EE 3

P203		S 2			
	B	FROM / TO			
1	GND (D)				
2					
3					
4	GND				
5	GND				
6	GND				
7	GND				
8	GND				
9	GND				
10	GND				
11	GND				
12	GND				
13	GND				
14	GND				
15	GND				
16	GND				
17	GND				
18	GND				
19					
20					
21					
22	H SW CH1	P201-21B	P224-4		
23	H SW CH0	P201-22B	P219-4		
24					
25					
26					
27					
28	-5V (D)				
29	+5V (D)				
30	+5V (D)				
31	GND (D)				
32	GND (D)				

HSW 1

P203	C
1	GND (D)
2	
3	
4	AT GND
5	AT CH1 A
6	AT CH1 A GND
7	AT CH1 B
8	AT CH1 B GND
9	AT CH0 A
10	AT CH0 A GND
11	AT CH0 B
12	AT CH0 B GND
13	
14	
15	
16	
17	
18	
19	
20	
21	
22	
23	
24	
25	
26	
27	
28	-5V (D)
29	+5V (D)
30	+5V (D)
31	GND (D)
32	GND (D)

P204		S 2			
	A	FROM / TO			
1	RF WFM GND	P202-1A	P249-4	P201-1B	P204-1B
2	ENV CH1	P208-4A			
3	ENV CH0	P208-2A	P202-2A		
4	E-E CH1 GND	P224-3	P204-6C	P202-6A	P202-8C
5	E-E CH1	P224-1	P202-7A		
6	E-E CH0 GND	P202-4A	P202-6C	P204-8C	P219-3
7	E-E CH0	P202-5A	P219-1		
8	E-E GND				
9	ENV DET CH0	P202-14A	P245-4B		
10	PB DATA CH0 GND	P202-15A	P220-3	P202-17C	P204-11C
11	PB DATA CH0	P202-16A	P220-1		
12	PS CLOCK CH0 GND	P202-17A	P220-6	P202-19C	P204-13C
13	PS CLOCK CH0	P202-18A	P220-4		
14	ENV DET CH1	P245-3B			
15	PB DATA CH1 GND	P220-9	P204-17C		
16	PB DATA CH1	P220-7			
17	PB CLOCK CH1 GND	P220-12	P204-19C		
18	PB CLOCK CH1	P220-10			
19	PB GND				
20	HT SPEED GND	P202-20A	P210-19A		
21	PB MODE	P214-21A	P202-21A		
22					
23	EQ GAIN CH1	P214-23B			
24	EQ GAIN CH0	P202-23A	P214-22B		
25	-5V (A)				
26	+5V (A)				
27	-12V (A)				
28	+12V (A)				
29	+15V (un)				
30	+8V (un)				
31	GND (A)				
32	GND (A)				

AT_ENV 1

ENV_DET 1

EQ_GAIN 5

-5V (A)

+5V (A)

-12V (A)

+12V (A)

GND

P204		S 2			
	B	FROM / TO			
1	RF WFM GND	P202-1B	P249-4	P202-1A	P204-1A
2					
3					
4					
5					
6					
7					
8					
9	GND				
10	GND				
11	GND				
12	GND				
13	GND				
14	GND				
15	GND				
16	GND				
17	GND				
18	GND				
19	GND				
20					
21					
22					
23					
24					
25	-5V (A)				
26	+5V (A)				
27	-12V (A)				
28	+12V (A)				
29	+15V (un)				
30	+8V (un)				
31	GND (A)				
32	GND (A)				

-5V (A)

+5V (A)

-12V (A)

+12V (A)

GND

P204	C
1	RF WFM
2	ENV CH1 GND
3	ENV CH0 GND
4	E-E GND
5	E-E CH1
6	E-E CH1 GND
7	E-E CH0
8	E-E CH0 GND
9	PB GND
10	PB DATA CH0
11	PB DATA CH0 GND
12	PB CLOCK CH0
13	PB CLOCK CH0 GND
14	
15	
16	PB DATA CH1
17	PB DATA CH1 GND
18	PB CLOCK CH1
19	PB CLOCK CH1 GND
20	HT SPEED
21	RF WFM SERECT 0
22	RF WFM SERECT 1
23	EQ FREQ CH1
24	EQ FREQ CH0
25	-5V (A)
26	+5V (A)
27	-12V (A)
28	+12V (A)
29	+15V (un)
30	+8V (un)
31	GND (A)
32	GND (A)

C

B

A

1 2 3 4

MATIC DIAGRAM (6/6) [S MOTHER (P203, P204) SCHEMATIC DIAGRAM (2/14) FOR S2]

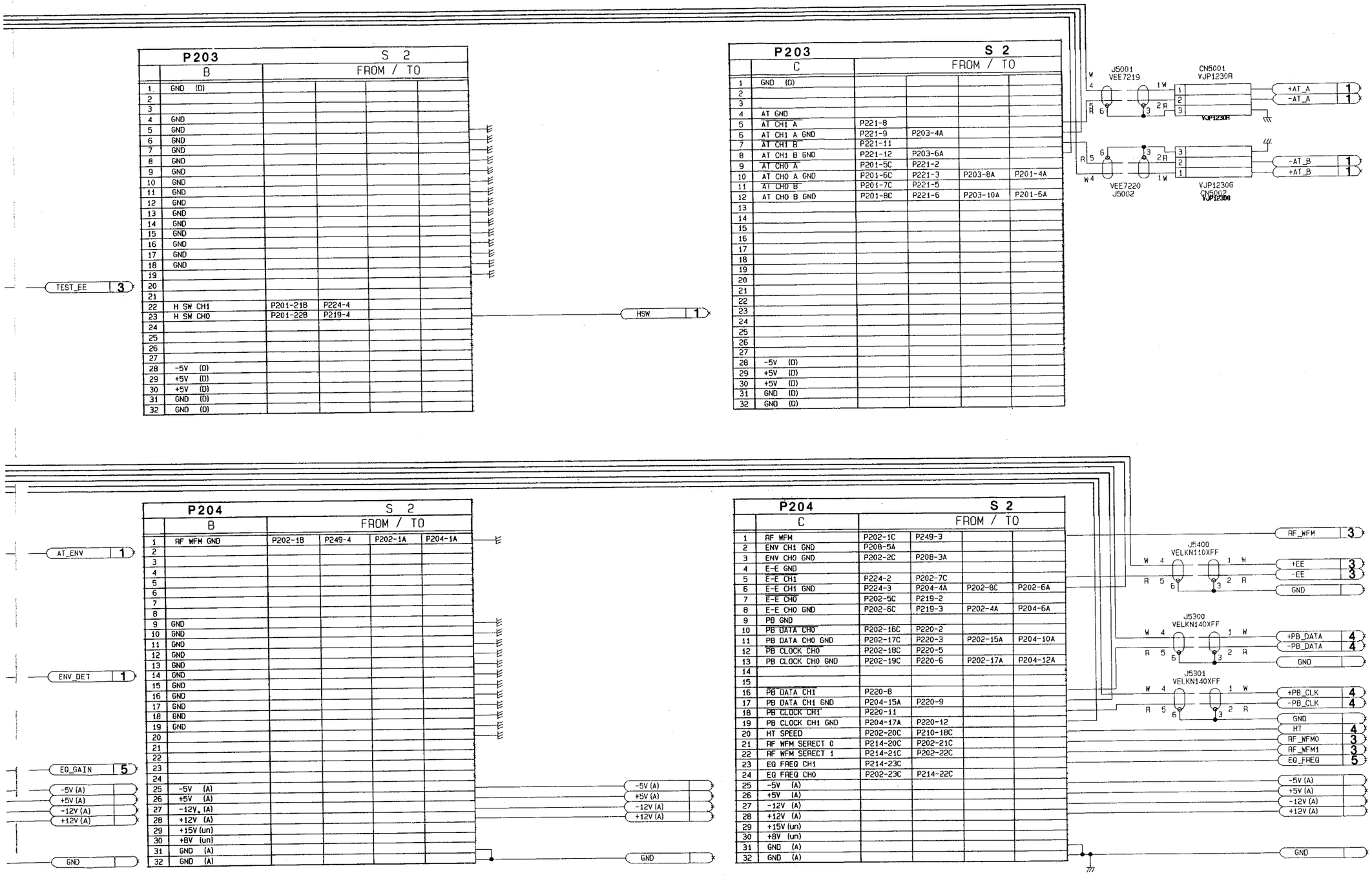

S3 CUE AUDIO SCHEMATIC DIAGRAM (1/5)

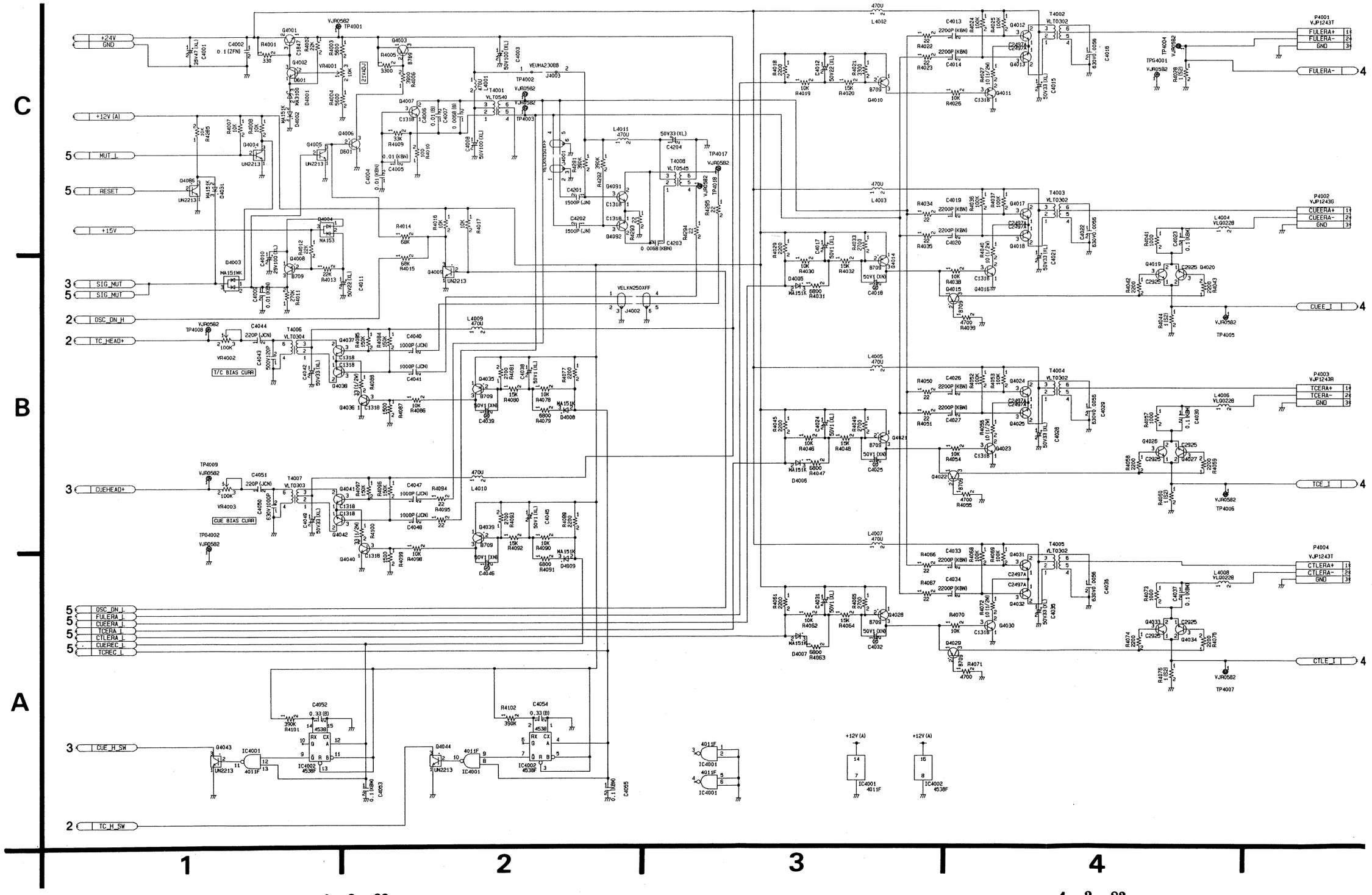

1 2 3 4

4—2—83 4—2—83

S3 CUE AUDIO SCHEMATIC DIAGRAM (2/5)

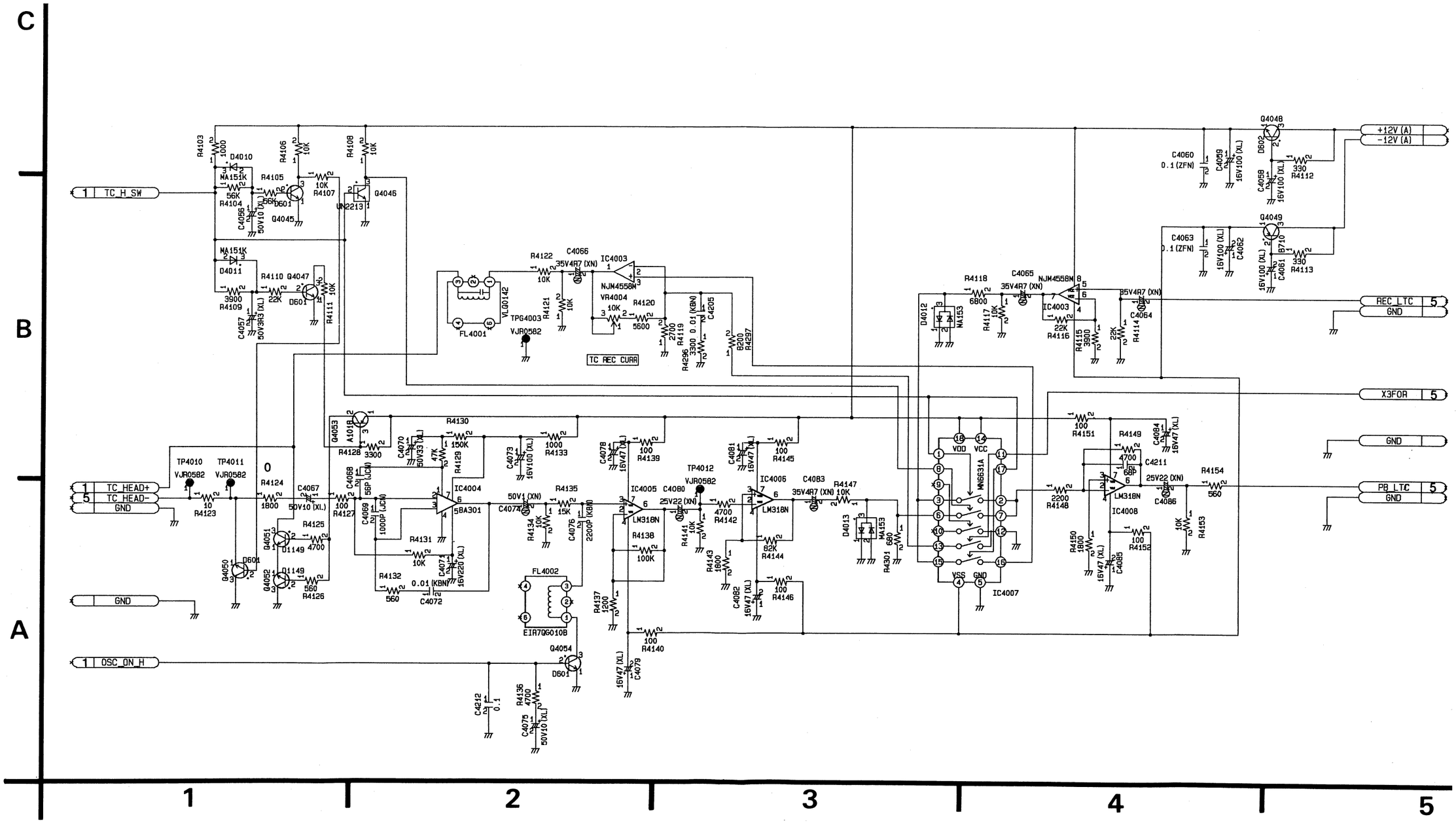

4—2—84

4—2—84

S3 CUE AUDIO SCHEMATIC DIAGRAM (3/5)

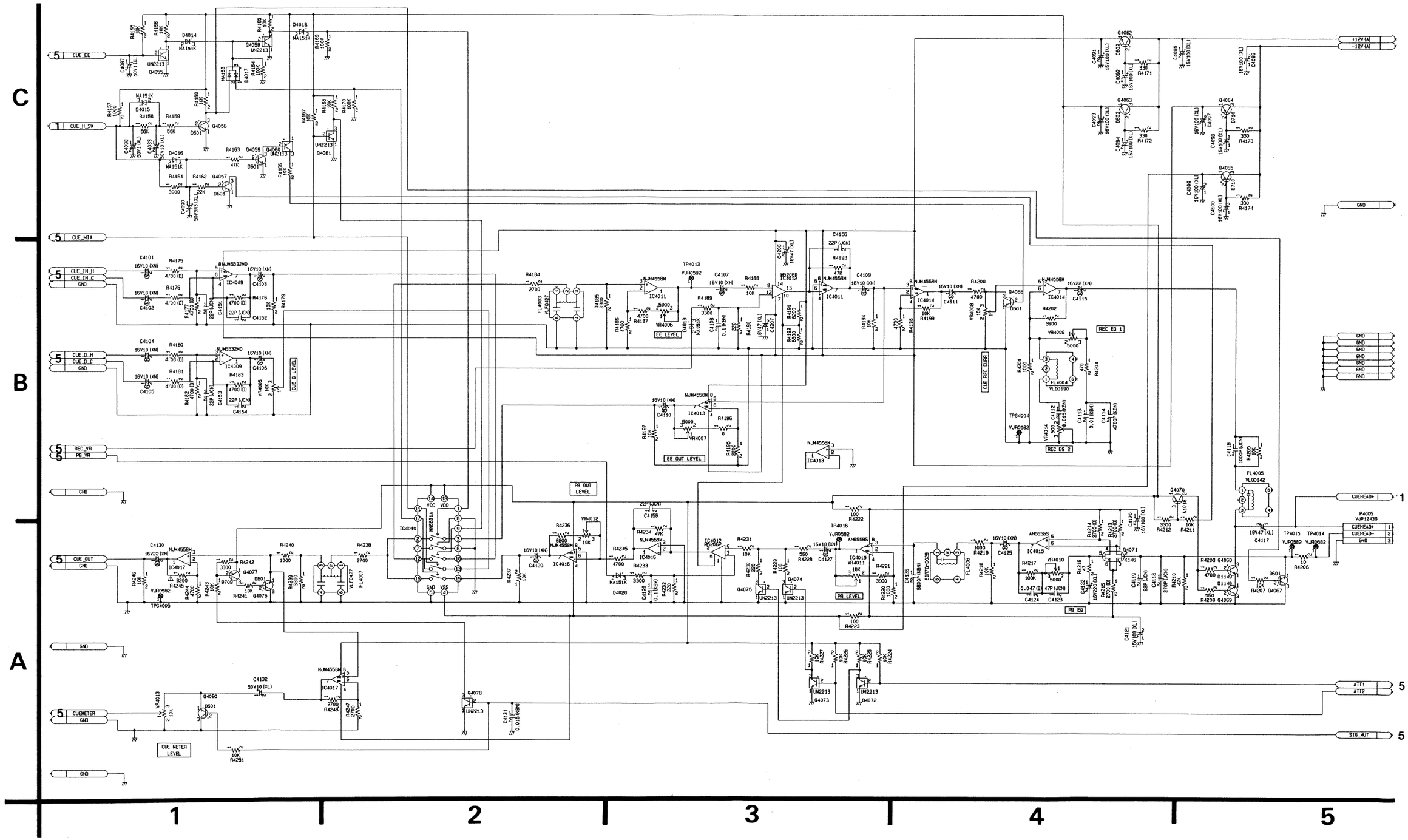

4—2—85

4—2—85

S3 CUE AUDIO SCHEMATIC DIAGRAM (4/5)

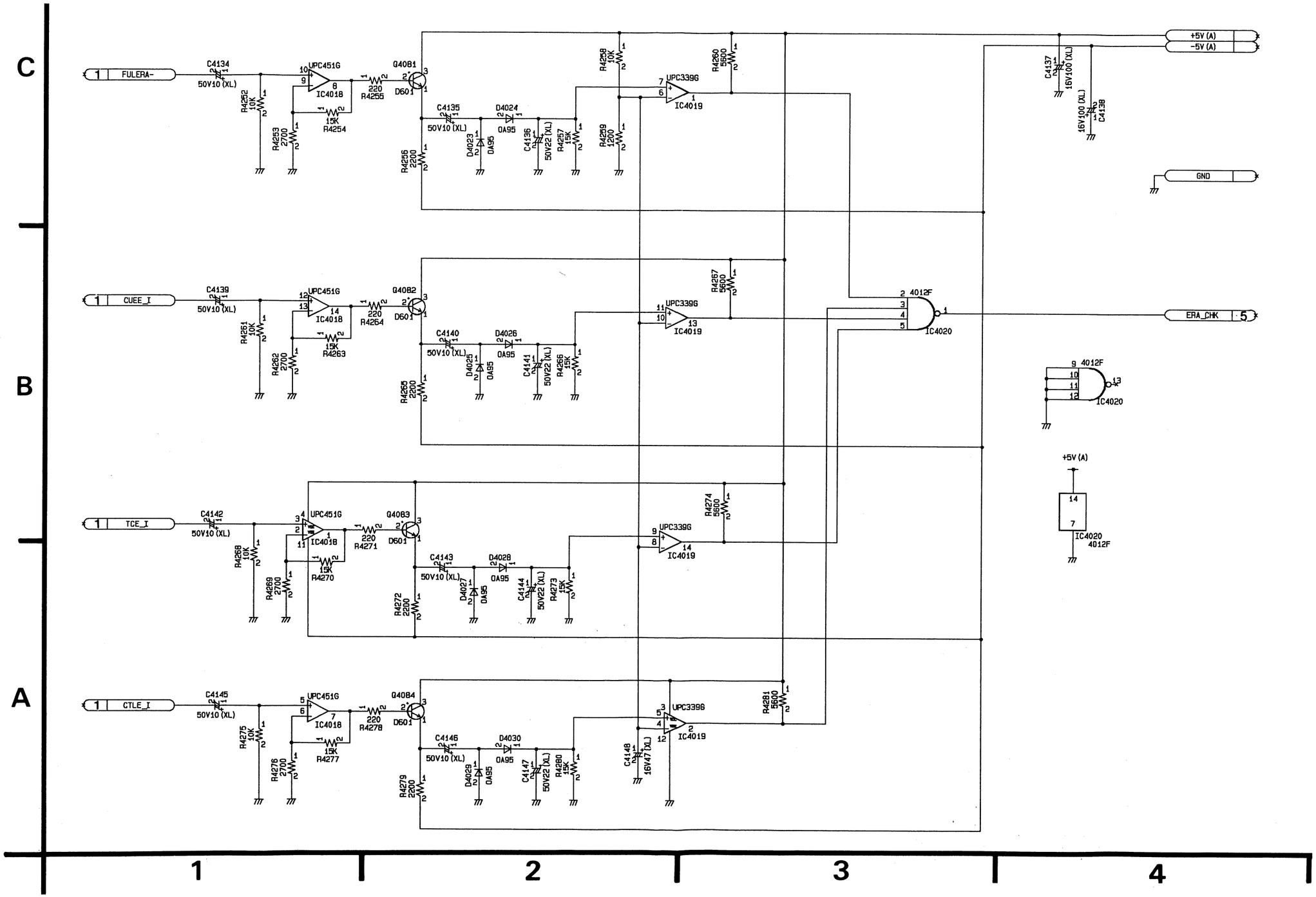

4—2—86

4—2—86

S3 CUE AUDIO SCHEMATIC DIAGRAM (5/5) [S MOTHER (P205, P206) SCHEMATIC DIAGRAM (3/14) FOR S3]

P205	A	S 3 FROM / TO			
1	GND (D)				
2					
3	GND (A)				
4	TC R/P HEAD GND	P228-3			
5	GND (A)				
6	GND (A)				
7					
8					
9					
10					
11					
12					
13					
14					
15					
16					
17					
18					
19	REC LTC	P211-26A			
20					
21	FULL ERASE	P211-21A			
22	CUE ERASE	P211-22A			
23	CUE REC	P211-23A			
24	MUTE	P211-24A			
25	CUE REC VR	P211-25A			
26	SIG MUTE	P230-3	P230-6		
27	+24V (un)				
28	-5V (D)				
29	+5V (D)				
30	+5V (D)				
31	GND (D)				
32	GND (D)				

GND
GND
GND
GND
REC_LTC 2
FULERA_L 1
CUEERA_L 1
CUEREC_L 1
MUT_L 1
REC_VR 3
SIG_MUT 3
+24V
-5V (D)
+5V (D)

P205	B	S 3 FROM / TO			
1	GND (D)				
2					
3	GND (A)				
4	TC R/P HEAD C	P228-2			
5	GND (A)				
6	GND (A)				
7					
8					
9					
10					
11					
12					
13					
14					
15					
16					
17					
18					
19	PB LTC	P211-26B			
20					
21	OSC ON	P211-21B			
22	TC ERASE	P211-22B			
23	TC REC	P211-23B			
24	ATT 1	P211-24B			
25	CUE PB VR	P211-25B			
26					
27	+24V (un)				
28	-5V (D)				
29	+5V (D)				
30	+5V (D)				
31	GND (D)				
32	GND (D)				

GND
TC_HEAD- 2
GND
GND
PB_LTC 2
OSC_ON_L 1
TCERA_L 1
TCREC_L 1
ATT1 3
PB_VR 3
+24V
-5V (D)
+5V (D)

P205	C
1	GND (D)
2	
3	GND (A)
4	TC R/P HEAD H
5	GND (A)
6	GND (A)
7	
8	
9	SYS RESET
10	
11	
12	
13	
14	
15	
16	
17	
18	
19	
20	
21	ERASE CHECK
22	CTL ERASE
23	CUE EE
24	ATT 2
25	CUE MIX
26	
27	+24V (un)
28	-5V (D)
29	+5V (D)
30	+5V (D)
31	GND (D)
32	GND (D)

P206	A	S 3 FROM / TO			
1					
2					
3					
4					
5					
6	GND (A)				
7	GND (A)				
8	GND (A)				
9	GND (A)				
10	GND (A)				
11	GND (A)				
12	GND (A)				
13	CUE LINE SIG GND	P231-3			
14	GND (A)				
15	GND (A)				
16	CUE D GND	P216-16A			
17	GND (A)				
18					
19					
20					
21					
22					
23					
24					
25	-5V (A)				
26	+5V (A)				
27	-12V (A)				
28	+12V (A)				
29	+15V (un)				
30	+8V (un)				
31	GND (A)				
32	GND (A)				

GND
GND
GND
GND
GND
GND
GND
GND
GND
GND
GND
-5V (A)
+5V (A)
-12V (A)
+12V (A)
+15V
+8V
GND
GND

P206	B	S 3 FROM / TO			
1					
2					
3					
4					
5					
6	GND (A)				
7	CUE METER GND	P216-11B			
8	GND (A)				
9	GND (A)				
10	CUE GND	P230-2	P230-5		
11	GND (A)				
12	GND (A)				
13	CUE LINE SIG C	P231-2			
14	GND (A)				
15	GND (A)				
16	CUE D C	P216-16B			
17	GND (A)				
18					
19					
20					
21					
22					
23					
24					
25	-5V (A)				
26	+5V (A)				
27	-12V (A)				
28	+12V (A)				
29	+15V (un)				
30	+8V (un)				
31	GND (A)				
32	GND (A)				

GND
GND
GND
GND
GND
GND
GND
CUE_IN_C 3
GND
GND
CUE_D_C 3
GND
-5V (A)
+5V (A)
-12V (A)
+12V (A)
+15V
+8V
GND
GND

P206	C
1	
2	
3	
4	
5	
6	GND (A)
7	CUE METER
8	GND (A)
9	GND (A)
10	CUE SIG
11	GND (A)
12	GND (A)
13	CUE LINE SIG H
14	GND (A)
15	GND (A)
16	CUE D H
17	GND (A)
18	
19	
20	
21	
22	
23	
24	
25	-5V (A)
26	+5V (A)
27	-12V (A)
28	+12V (A)
29	+15V (un)
30	+8V (un)
31	GND (A)
32	GND (A)

C B A

1 2 3 4 5

MOTHER (P205, P206) SCHEMATIC DIAGRAM (3/14) FOR S3]

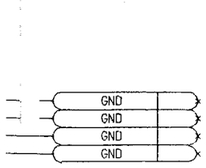

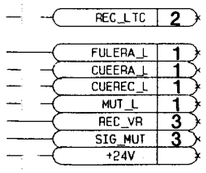

P205	B	S 3 FROM / TO			
1	GND (D)				
2					
3	GND (A)				
4	TC R/P HEAD C	P228-2			
5	GND (A)				
6	GND (A)				
7					
8					
9					
10					
11					
12					
13					
14					
15					
16					
17					
18					
19	PB LTC	P211-26B			
20					
21	OSC ON	P211-21B			
22	TC ERASE	P211-22B			
23	TC REC	P211-23B			
24	ATT 1	P211-24B			
25	CUE PB VR	P211-25B			
26					
27	+24V (un)				
28	-5V (D)				
29	+5V (D)				
30	+5V (D)				
31	GND (D)				
32	GND (D)				

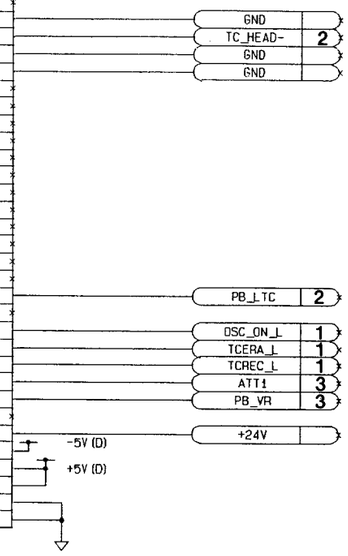

P205	C	S 3 FROM / TO				
1	GND (D)					
2						
3	GND (A)					
4	TC R/P HEAD H	P228-1				
5	GND (A)					
6	GND (A)					
7						
8						
9	SYS RESET	P211-9C	P213-9C	P233-10A	P241-12B	P260-9
10						
11						
12						
13						
14						
15						
16						
17						
18						
19						
20						
21	ERASE CHECK	P211-21C				
22	CTL ERASE	P211-22C				
23	CUE EE	P211-23C				
24	ATT 2	P211-24C				
25	CUE MIX	P211-25C				
26						
27	+24V (un)					
28	-5V (D)					
29	+5V (D)					
30	+5V (D)					
31	GND (D)					
32	GND (D)					

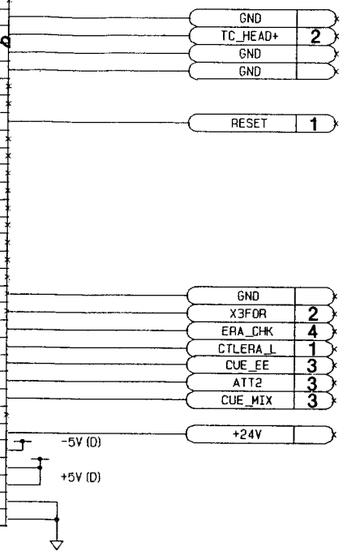

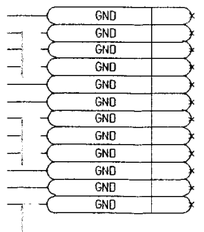

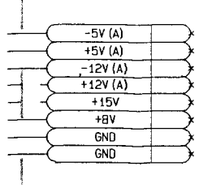

P206	B	S 3 FROM / TO			
1					
2					
3					
4					
5					
6	GND (A)				
7	CUE METER GND	P216-11B			
8	GND (A)				
9	GND (A)				
10	CUE GND	P230-2	P230-5		
11	GND (A)				
12	GND (A)				
13	CUE LINE SIG C	P231-2			
14	GND (A)				
15	GND (A)				
16	CUE D C	P216-16B			
17	GND (A)				
18					
19					
20					
21					
22					
23					
24					
25	-5V (A)				
26	+5V (A)				
27	-12V (A)				
28	+12V (A)				
29	+15V (un)				
30	+8V (un)				
31	GND (A)				
32	GND (A)				

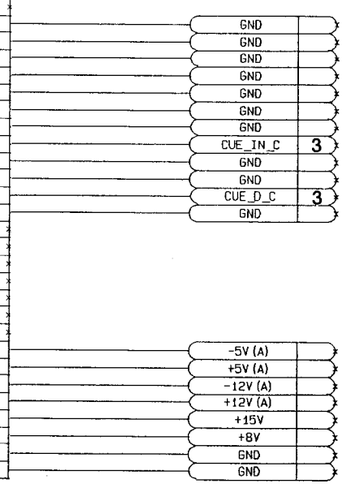

P206	C	S 3 FROM / TO			
1					
2					
3					
4					
5					
6	GND (A)				
7	CUE METER	P216-11C			
8	GND (A)				
9	GND (A)				
10	CUE SIG	P230-1	P230-4		
11	GND (A)				
12	GND (A)				
13	CUE LINE SIG H	P231-1			
14	GND (A)				
15	GND (A)				
16	CUE D H	P216-16C			
17	GND (A)				
18					
19					
20					
21					
22					
23					
24					
25	-5V (A)				
26	+5V (A)				
27	-12V (A)				
28	+12V (A)				
29	+15V (un)				
30	+8V (un)				
31	GND (A)				
32	GND (A)				

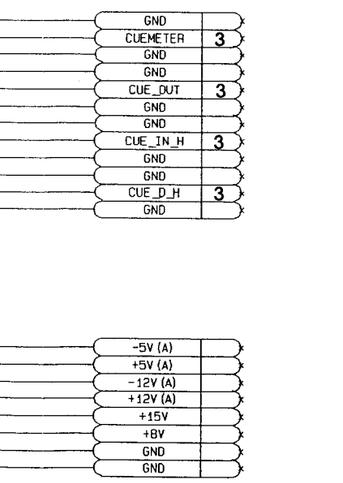

3 4 5 6

NTSC

S3 WAVEFORMS NTSC

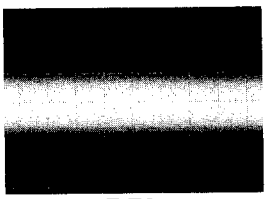

TP4001 E-E2
20mV/20μsec. div.

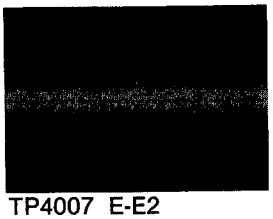

TP4007 E-E2
20mV/20μsec. div.

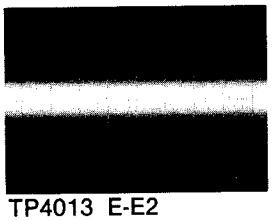

TP4013 E-E2
20mV/20μsec. div.

TP4002 E-E2
20mV/20μsec. div.

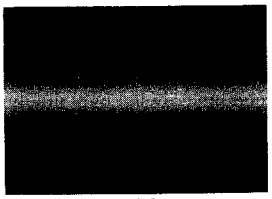

TP4008 E-E2
20mV/20μsec. div.

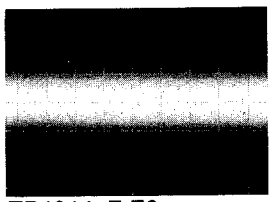

TP4014 E-E2
20mV/20μsec. div.

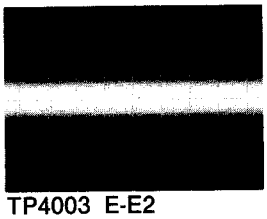

TP4003 E-E2
20mV/20μsec. div.

TP4009 E-E2
20mV/20μsec. div.

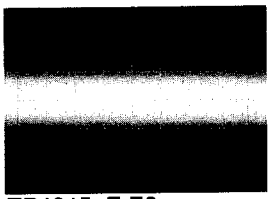

TP4015 E-E2
20mV/20μsec. div.

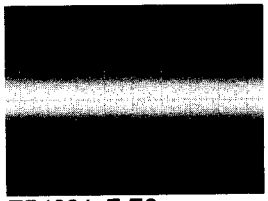

TP4004 E-E2
20mV/20μsec. div.

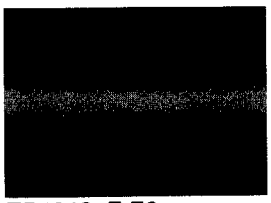

TP4010 E-E2
20mV/20μsec. div.

TP4016 E-E2
20mV/20μsec. div.

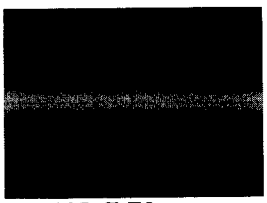

TP4005 E-E2
20mV/20μsec. div.

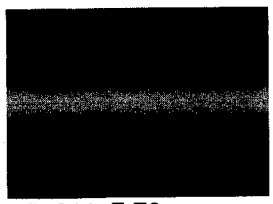

TP4011 E-E2
20mV/20μsec. div.

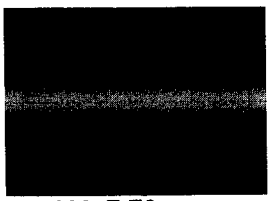

TP4006 E-E2
20mV/20μsec. div.

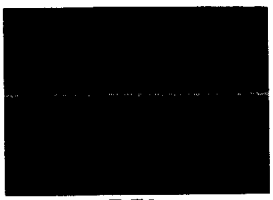

TP4012 E-E2
1V/20μsec. div.

PAL

S3 WAVEFORMS PAL

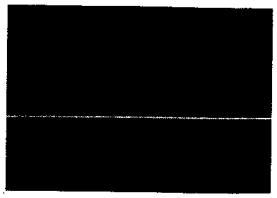

TP4001 E-E2
(TP4002–TP4018)
1V/20μsec. div.

S4 AT (DRIVE) SCHEMATIC DIAGRAM (1/6)

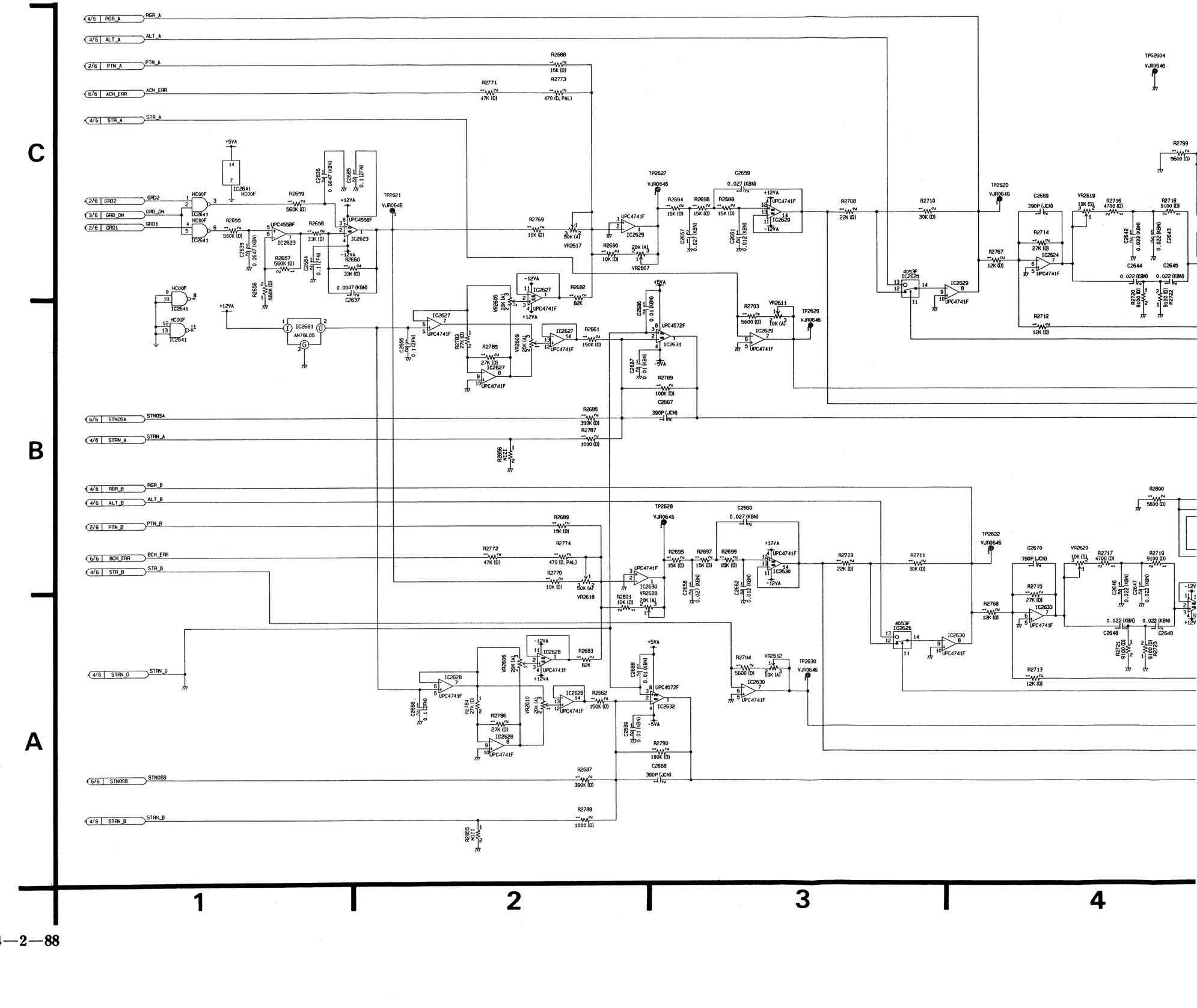
C
B
A
1
2
3
4
RGR_A
ALT_A
PTN_A
ACH_ERR
STR_A
GRD2
GRD_DN
GRD1
STNOSA
STRN_A
RGR_B
ALT_B
PTN_B
BCH_ERR
STR_B
STRN_G
STNOSB
STRN_B
R2688
15K (D)
R2771
47K (D)
R2773
470 (D, PAL)
R2769
10K (D)
R2690
10K (D)
R2682
82K
R2661
150K (D)
R2685
390K (D)
R2787
1000 (D)
R2689
15K (D)
R2772
47K (D)
R2774
470 (D, PAL)
R2770
10K (D)
R2691
10K (D)
R2683
82K
R2662
150K (D)
R2687
390K (D)
R2788
1000 (D)
R2708
22K (D)
R2710
30K (D)
R2709
22K (D)
R2711
30K (D)
R2767
12K (D)
R2768
12K (D)
R2712
12K (D)
R2713
12K (D)
R2793
5600 (D)
R2794
5600 (D)
R2789
100K (D)
R2790
100K (D)
R2799
5600 (D)
R2800
5600 (D)
R2714
27K (D)
R2715
27K (D)
R2716
4700 (D)
R2717
4700 (D)
R2718
9100 (D)
R2719
9100 (D)
R2720
9100 (D)
R2721
9100 (D)
R2722
9100 (D)
R2723
9100 (D)
VR2617
50K (A)
VR2618
50K (A)
VR2607
20K (A)
VR2608
20K (A)
VR2611
10K (A)
VR2612
10K (A)
VR2606
20K (A)
VR2609
20K (A)
VR2610
20K (A)
VR2619
10K (S)
VR2620
10K (S)
C2659
0.027 (KBN)
C2660
0.027 (KBN)
C2661
0.012 (KBN)
C2662
0.012 (KBN)
C2657
0.027 (KBN)
C2658
0.027 (KBN)
C2667
390P (JCN)
C2668
390P (JCN)
C2669
390P (JCN)
C2670
390P (JCN)
C2642
0.022 (KBN)
C2643
0.022 (KBN)
C2644
0.022 (KBN)
C2645
0.022 (KBN)
C2646
0.022 (KBN)
C2647
0.022 (KBN)
C2648
0.022 (KBN)
C2649
0.022 (KBN)
C2635
0.1 (ZFN)
C2636
0.0047 (KBN)
C2637
0.0047 (KBN)
C2638
0.0047 (KBN)
C2639
0.0047 (KBN)
C2640
0.1 (ZFN)
C2641
0.1 (ZFN)
C2656
0.1 (ZFN)
C2665
0.1 (ZFN)
C2666
0.1 (ZFN)
C2685
0.01 (KBN)
C2686
0.01 (KBN)
C2687
0.01 (KBN)
C2688
0.01 (KBN)
C2689
0.01 (KBN)
R2655
560K (D)
R2656
560K (D)
R2657
560K (D)
R2658
33K (D)
R2659
560K (D)
R2660
33K (D)
R2780
27K (D)
R2781
27K (D)
R2785
27K (D)
R2786
27K (D)
R2784
27K (D)
R2782
27K (D)
R2783
27K (D)
R2784
27K (D)
R2785
27K (D)
R2786
27K (D)
R2787
27K (D)
R2788
27K (D)
R2789
27K (D)
R2790
27K (D)
R2791
27K (D)
R2792
27K (D)
R2793
27K (D)
R2794
27K (D)

GRAM (1/6)

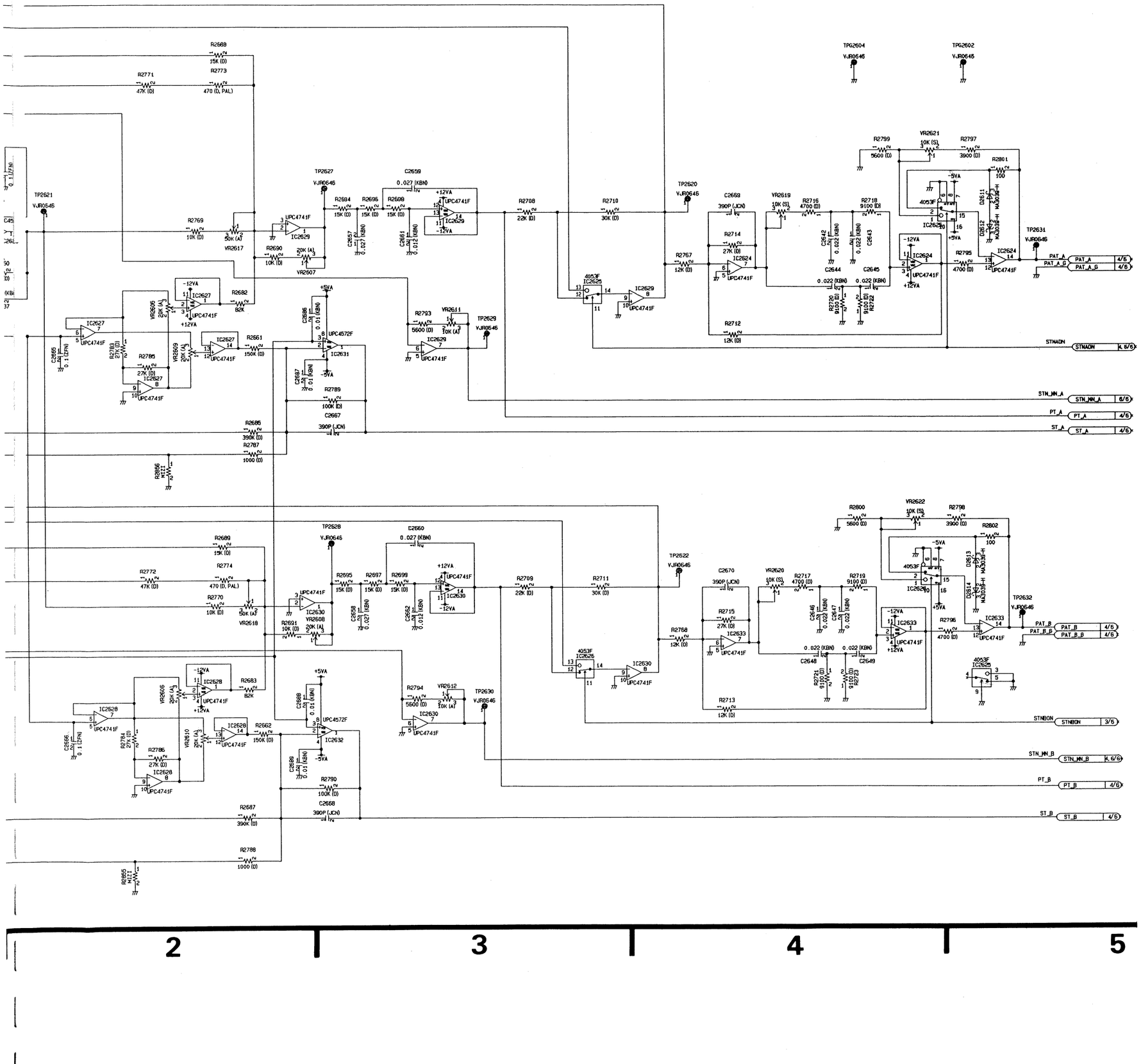

COMPARISON CHART BETWEEN
NTSC MODEL AND PAL MODEL
S4 AT P.C.B.

REF. NO.	NTSC	PAL
IC2611	VSI0894A	VSI0894B
IC2657	VSI1084F	VSI1085F
	VEP82065C	VEP82065D

S4 AT SCHEMATIC DIAGRAM (2/6)

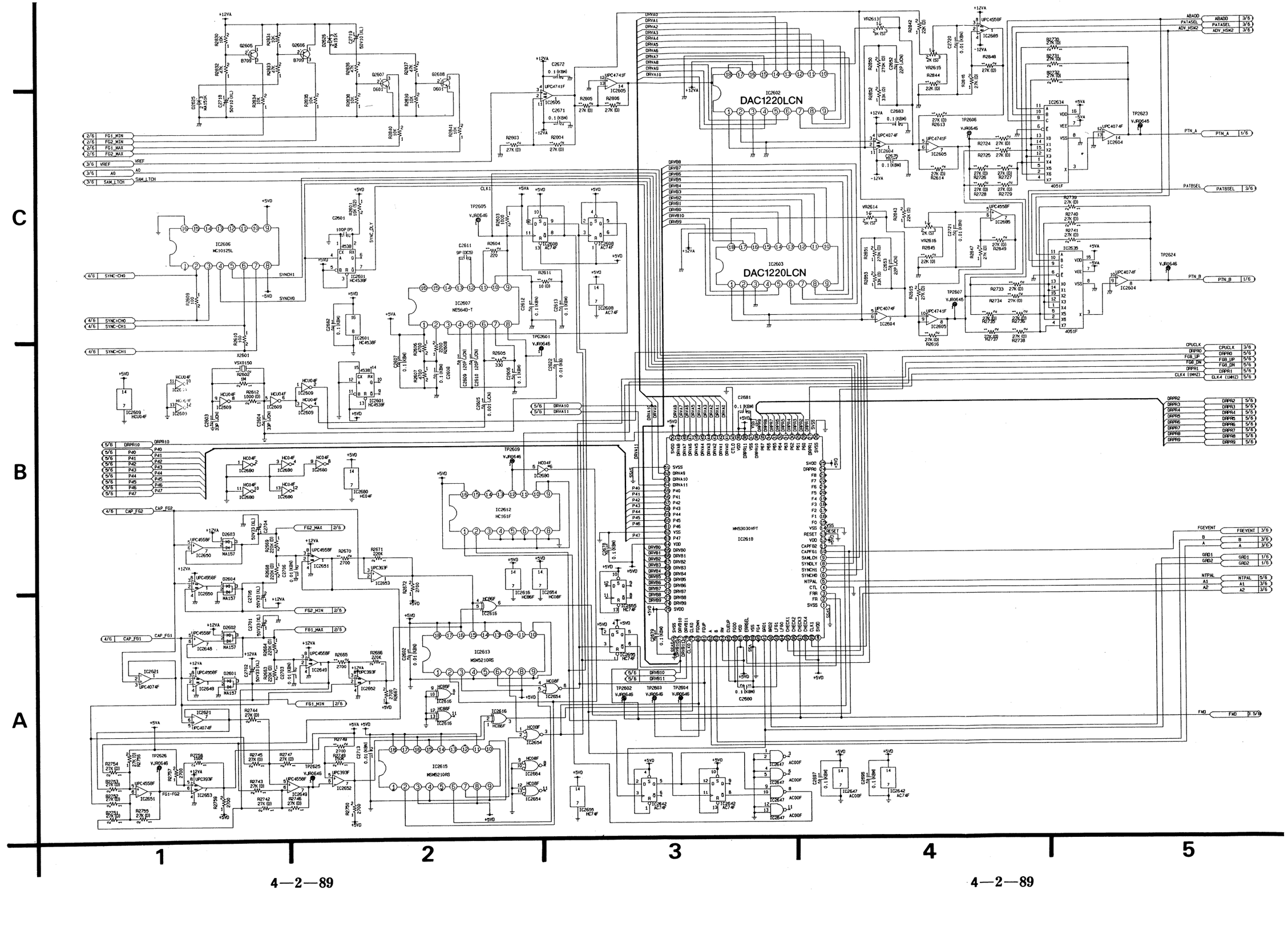

S4 AT SCHEMATIC DIAGRAM (3/6)

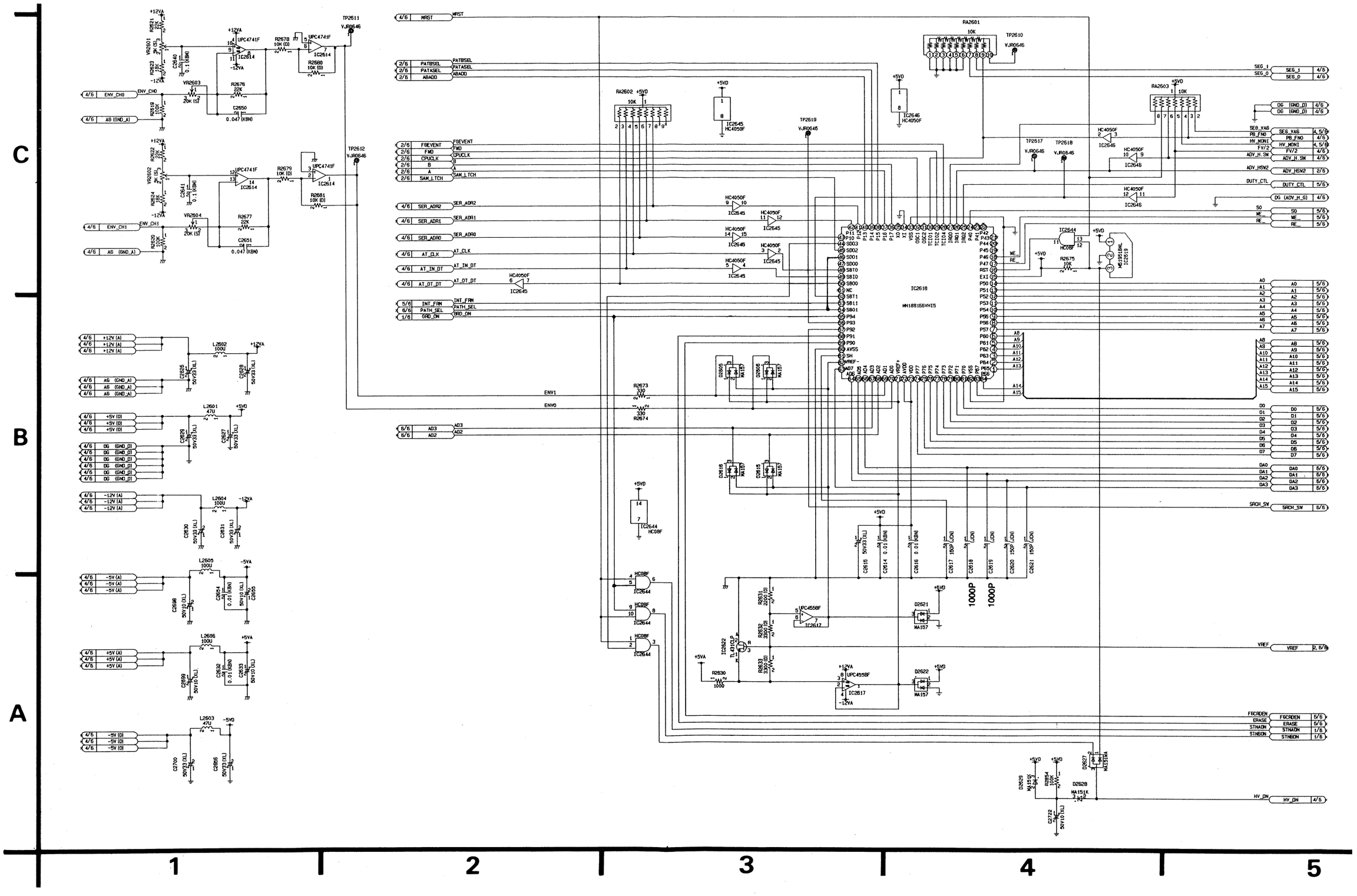

S4 AT (CONNECTOR) SCHEMATIC DIAGRAM (4/6) [S MOTHER (P207, P208) SCHEMATIC DIAGRAM (4/14) FOR S4]

P207	A	S 4 FROM / TO				
1	GND (D)					DG
2						
3						
4						
5						
6						
7						
8						
9	SEG-0	P245-8B				SEG_0
10	PB_FN0	P245-6B				PB_FN0
11						
12						
13						
14						
15						
16						
17						
18						
19	STRN_B					STRN_B
20	PAT_A_G					PAT_A_G
21	PAT_B_G					PAT_B_G
22						
23						
24						
25						
26						
27						
28	-5V (D)					-5V (D)
29	+5V (D)					+5V (D)
30	+5V (D)					+5V (D)
31	GND (D)					DG
32	GND (D)					DG

P207	B	S 4 FROM / TO				
1	GND (D)					DG
2						
3						
4						
5						
6						
7						
8						
9	SEG_1	P245-7B				SEG_1
10	SEG_VAG	P245-5B				SEG_VAG
11						
12						
13						
14						
15	FR_GATE	P209-15B				FR_GATE
16	FV/2	P209-16B	P245-7A			FV/2
17						
18						
19	STRN_G	P290-2				STRN_G
20	PAT_A	P290-6				PAT_A
21	PAT_B	P290-8				PAT_B
22						
23						
24						
25						
26						
27						
28	-5V (D)					-5V (D)
29	+5V (D)					+5V (D)
30	+5V (D)					+5V (D)
31	GND (D)					DG
32	GND (D)					DG

P207	C
1	GND (D)
2	
3	
4	
5	
6	
7	
8	
9	SYNC+CH0
10	SYNC-CH0
11	
12	SYNC+CH1
13	SYNC-CH1
14	
15	
16	
17	
18	
19	STRN_A
20	HV_MONI
21	HV_ON
22	
23	
24	
25	
26	
27	
28	-5V (D)
29	+5V (D)
30	+5V (D)
31	GND (D)
32	GND (D)

P208	A	S 4 FROM / TO				
1						
2	ENV_CH0	P202-2A	P204-3A			ENV_CH0
3	ENV_CH0_GND	P202-2C				AG (ENV_CH0_GND)
4	ENV_CH1	P204-2A				ENV_CH1
5	ENV_CH1_GND	P204-2C				AG (ENV_CH1_GND)
6						
7						
8						
9						
10	AT_OT_DT	P210-10A				AT_OT_DT
11	ADV_H_SW	P210-11A				ADV_H.SW
12	ADV_H_SW_GND	P210-12A				DG (ADV_H.SW_GND)
13	CAP_FB	P210-13A				CAP_FB
14	CAP_FB_G	P210-14A				CAP_FB_G
15						
16	CAP F/R	P210-16A				
17						
18						
19						
20						
21						
22						
23						
24						
25	-5V (A)					-5V (A)
26	+5V (A)					+5V (A)
27	-12V (A)					-12V (A)
28	+12V (A)					+12V (A)
29	+15V (un)					+15V
30	+8V (un)					+8V
31	GND (A)					AG
32	GND (A)					AG

P208	B	S 4 FROM / TO				
1						
2						
3						
4						
5						
6						
7	AC_CTL	P210-5A	P212-5A			AC_CTL
8						
9						
10	AT_IN_DT	P210-10B				AT_IN_DT
11	REC_H_SW	P210-11B	P251-13B			
12	REC_H_SW_GND	P210-12B				
13						
14						
15						
16						
17						
18						
19						
20						
21						
22						
23						
24						
25	-5V (A)					-5V (A)
26	+5V (A)					+5V (A)
27	-12V (A)					-12V (A)
28	+12V (A)					+12V (A)
29	+15V (un)					+15V
30	+8V (un)					+8V
31	GND (A)					AG
32	GND (A)					AG

P208	C
1	
2	
3	
4	
5	
6	SER_ADR0
7	SER_ADR1
8	SER_ADR2
9	
10	AT_CLK
11	CNF_H_SW
12	CNF_H_SW_GND
13	CNF_H
14	CAP_FG_1
15	
16	CAP_FG_2
17	
18	REC ENV CH0
19	REC ENV CH0 GND
20	REC ENV CH1
21	REC ENV CH1 GND
22	MAST
23	
24	
25	-5V (A)
26	+5V (A)
27	-12V (A)
28	+12V (A)
29	+15V (un)
30	+8V (un)
31	GND (A)
32	GND (A)

C

B

A

1 2 3 4 5

I (4/6) [S MOTHER (P207, P208) SCHEMATIC DIAGRAM (4/14) FOR S4]

P207	B	S 4 FROM / TO			
1	GND (D)				
2					
3					
4					
5					
6					
7					
8					
9	SEG_1	P245-7B			
10	SEG_VAG	P245-5B			
11					
12					
13					
14					
15	FR_GATE	P209-15B			
16	FV/2	P209-16B	P245-7A		
17					
18					
19	STRN_G	P290-2			
20	PAT_A	P290-6			
21	PAT_B	P290-8			
22					
23					
24					
25					
26					
27					
28	-5V (D)				
29	+5V (D)				
30	+5V (D)				
31	GND (D)				
32	GND (D)				

DG
SEG_1
SEG_VAG
FR_GATE
FV/2
STRN_G
PAT_A
PAT_B
-5V (D)
+5V (D)
+5V (D)
DG
DG

P207	C	S 4 FROM / TO			
1	GND (D)				
2					
3					
4					
5					
6					
7					
8					
9	SYNC+CH0	P229-1			
10	SYNC-CH0	P229-2			
11					
12	SYNC+CH1	P229-4			
13	SYNC-CH1	P229-5			
14					
15					
16					
17					
18					
19	STRN_A	P290-1			
20	HV_MONI	P290-4			
21	HV_ON	P290-5			
22					
23					
24					
25					
26					
27					
28	-5V (D)				
29	+5V (D)				
30	+5V (D)				
31	GND (D)				
32	GND (D)				

DG
SYNC+CH0
SYNC-CH0
SYNC+CH1
SYNC-CH1
STRN_A
HV_MONI
HV_ON
-5V (D)
+5V (D)
+5V (D)
DG
DG

P2602
VJS1435 (6)

1	ST_A	ST_A
2	PT_A	PT_A
3	STR_A	STR_A
4	ALT_A	ALT_A
5	RGR_A	RGR_A
6	STN_MN_A	STN_MN_A

P2603
VJS1435 (7)

1	-5VA	-5VA
2	ST_B	ST_B
3	ALT_B	ALT_B
4	RGR_B	RGR_B
5	PT_B	PT_B
6	STN_MN_B	STN_MN_B
7	STR_B	STR_B

P208	B	S 4 FROM / TO			
1					
2					
3					
4					
5					
6					
7	AC_CTL	P210-5A	P212-5A		
8					
9					
10	AT_IN_DT	P210-10B			
11	REC_H_SW	P210-11B	P251-13B		
12	REC_H_SW_GND	P210-12B			
13					
14					
15					
16					
17					
18					
19					
20					
21					
22					
23					
24					
25	-5V (A)				
26	+5V (A)				
27	-12V (A)				
28	+12V (A)				
29	+15V (un)				
30	+8V (un)				
31	GND (A)				
32	GND (A)				

AC_CTL
AT_IN_DT
-5V (A)
+5V (A)
-12V (A)
+12V (A)
+15V
+8V
AG
AG

P208	C	S 4 FROM / TO			
1					
2					
3					
4					
5					
6	SER_ADR0	P214-6B	P210-6B		
7	SER_ADR1	P214-7B	P210-7B		
8	SER_ADR2	P214-8B	P210-8B		
9					
10	AT_CLK	P210-10C			
11	CNF_H_SW	P210-11C			
12	CNF_H_SW_GND	P210-12C			
13	CNF_H	P210-13C			
14	CAP_FG_1	P210-14C			
15					
16	CAP_FG_2	P210-16C			
17					
18	REC ENV CH0	P235-1	P201-24A	P210-19B	
19	REC ENV CH0 GND	P235-2	P201-25A	P210-19C	
20	REC ENV CH1	P235-3	P201-24C	P210-22A	
21	REC ENV CH1 GND	P235-4	P201-25C	P210-23A	
22	MRST	P213-20A			
23					
24					
25	-5V (A)				
26	+5V (A)				
27	-12V (A)				
28	+12V (A)				
29	+15V (un)				
30	+8V (un)				
31	GND (A)				
32	GND (A)				

SER_ADR0
SER_ADR1
SER_ADR2
AT_CLK
CNF_H
CAP_FG1
CAP_FG2
REC_E_0 (REC_ENV_CH0)
REC_E_0G (REC_ENV_CH0_GND)
REC_E_1 (REC_ENV_CH1)
REC_E_1G (REC_ENV_CH1_GND)
MRST
-5V (A)
+5V (A)
-12V (A)
+12V (A)
+15V
+8V
AG
AG

P2604
VJS1435 (6)

1	+5VA	+5VA
2	AG	AG
3	+5VD	+5VD
4	DG	DG
5	ADV_HSW2	ADV_HSW2
6	FE_ON	FE_ON

2 3 4 5 6

S4 AT (EX) SCHEMATIC DIAGRAM (5/6)

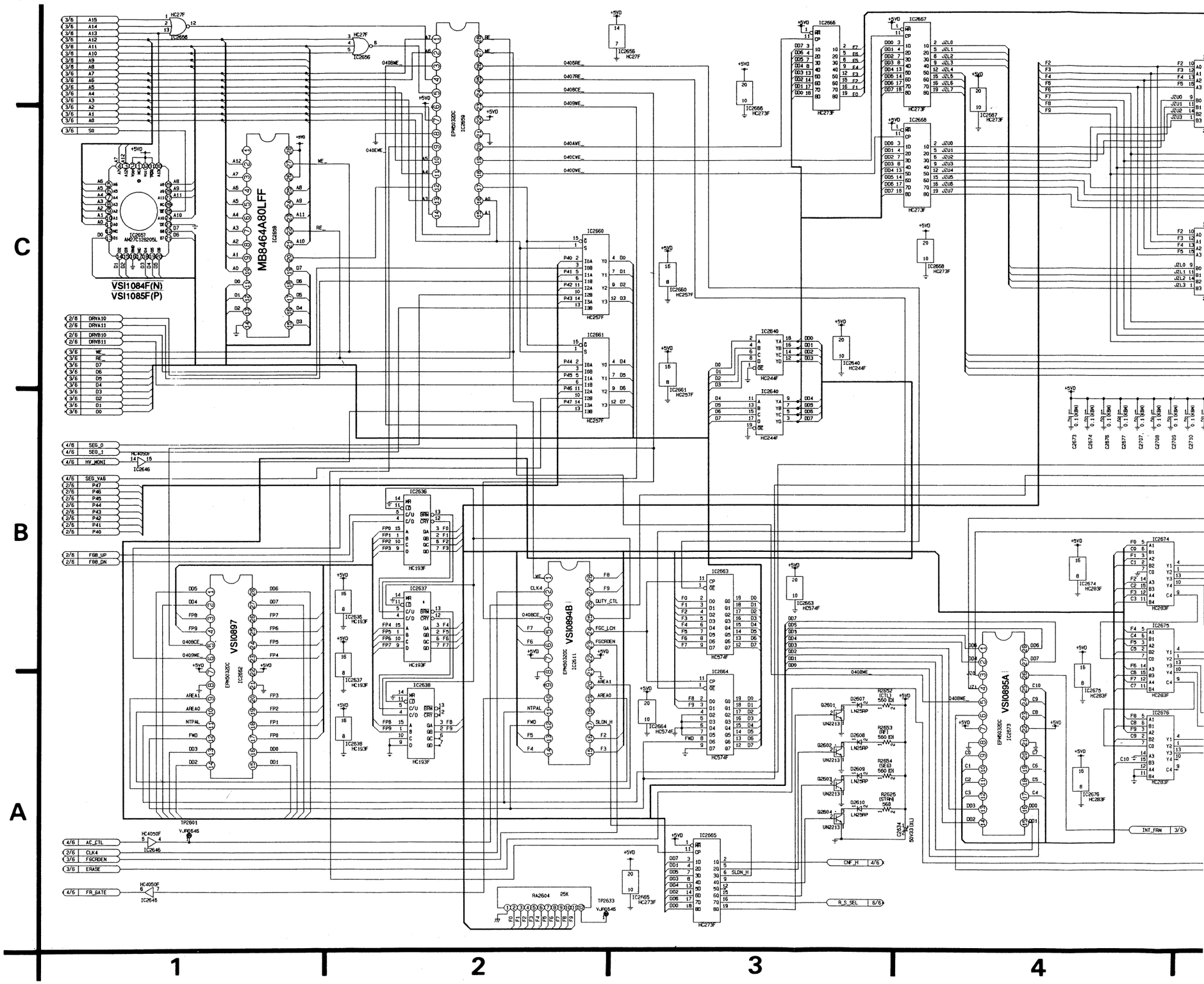

DIAGRAM (5/6)

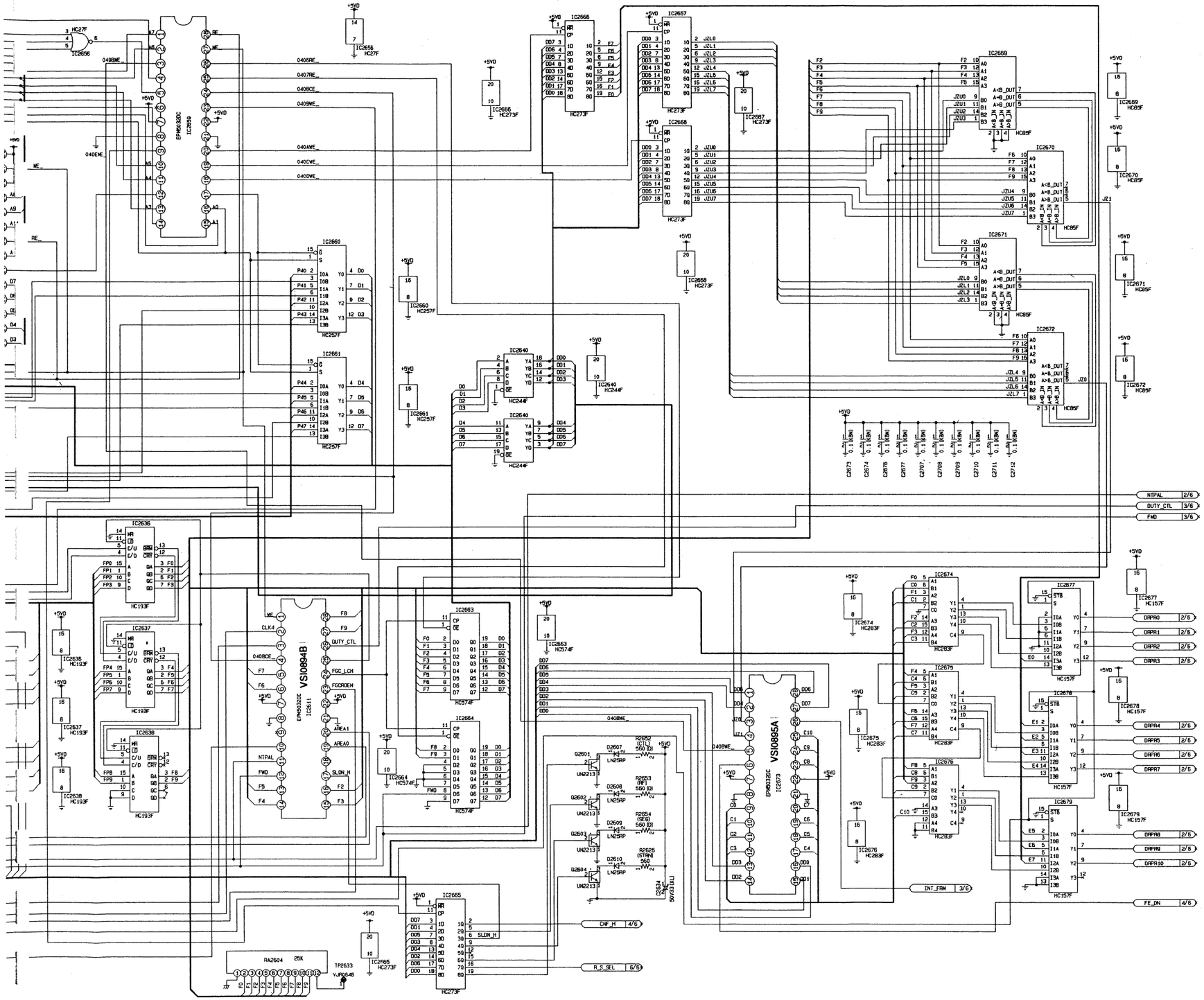

2 3 4 5

NTSC

S4 WAVEFORMS NTSC

TP2601 VAR X1
2V/5msec. div

TP2610
VAR X1
2V/10msec. div.

TP2618 VAR X1
2V/5msec. div.

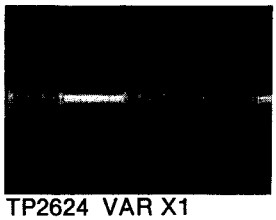

TP2624 VAR X1
500mV/5msec. div.

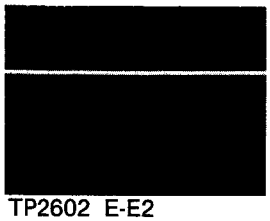

TP2602 E-E2
(TP2603, TP2604)
5V/1msec. div

TP2611 VAR X1
500mV/5msec. div.

TP2619 VAR X1
2V/10msec. div.

TP2625 VAR X1
1V/100μsec. div.

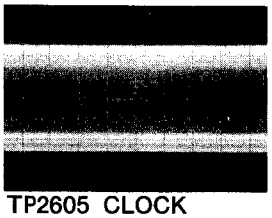

TP2605 CLOCK
1V/20μsec. div.

TP2612 VAR X1
500mV/5msec. div.

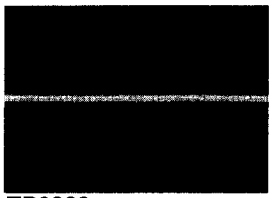

TP2620
VAR X1
500mV/1msec. div.

TP2626 VAR X1
1V/100μsec. div.

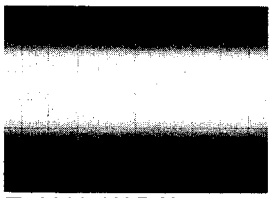

TP2606 VAR X1
50mV/50μsec. div.

TP2013 VAR X1
(TP2014)
1V/10msec. div.

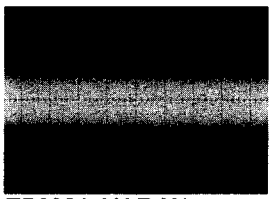

TP2621 VAR X1
50mV/200μsec. div.

TP2627 VAR X1
500mV/1msec. div.

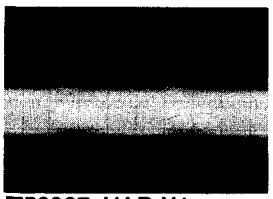

TP2607 VAR X1
200mV/200μsec. div.

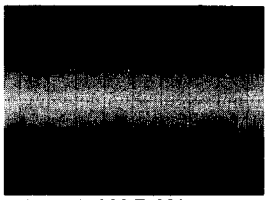

TP2615 VAR X1
100mV/100μsec. div.

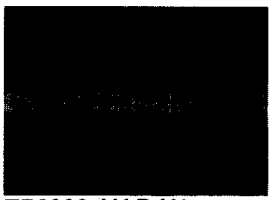

TP2622 VAR X1
50mV/200μsec. div.

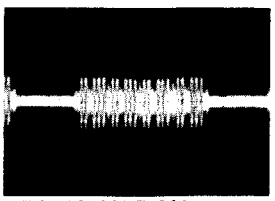

TP2628 VAR X1
500mV/5msec. div.

TP2609 VAR X1
2V/200nsec. div.

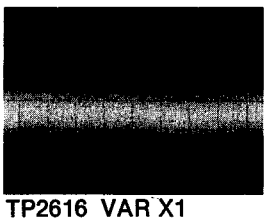

TP2616 VAR X1
50mV/20μsec. div.

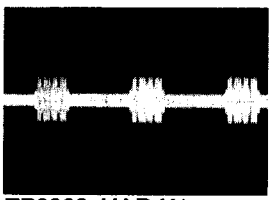

TP2623 VAR X1
500mV/10msec. div.

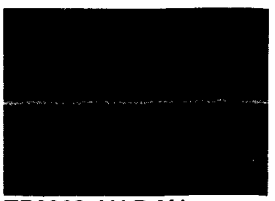

TP2629 VAR X1
(TP2630, TP2631, TP2632)
1V/5msec. div.

PAL

S4 WAVEFORMS PAL

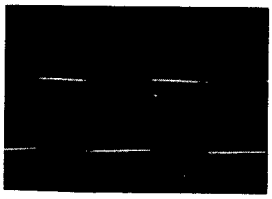

TP2601 VAR X0.52
2V/5msec. div.

TP2611 VAR X0.52
(TP2612)
500mV/5msec. div.

TP2620 VAR X0.52
(TP2622)
1V/10msec. div.

TP2633 VAR X0.52
2V/20msec. div.

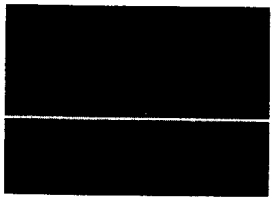

TP2602 VAR X0.52
(TP2603, TP2604)
1V/20µsec. div.

TP2613 VAR X0.52
(TP2614)
1V/10msec. div.

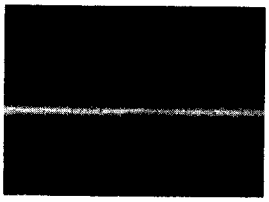

TP2621 VAR X0.52
20mV/20µsec. div.

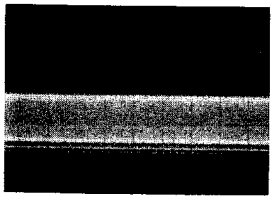

TP2605 VAR X0.52
500mV/20µsec. div.

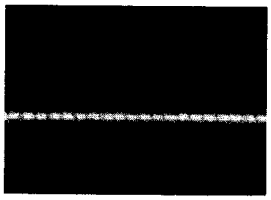

TP2615 VAR X0.52
(TP2616)
200mV/20µsec. div.

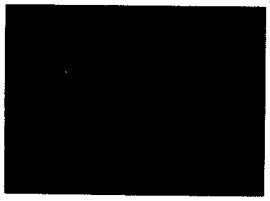

TP2623 VAR X0.52
(TP2624)
1V/10msec. div.

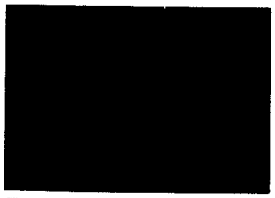

TP2606 VAR X0.52
(TP2607)
1V/10msec. div.

TP2617 VAR X0.52
2V/5msec. div.

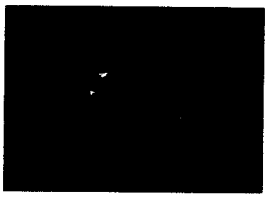

TP2625 VAR X0.52
(TP2626)
2V/200µsec. div.

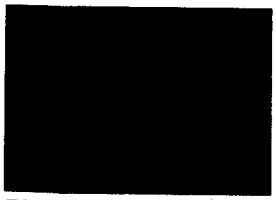

TP2609 VAR X0.52
2V/10µsec. div.

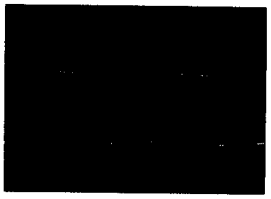

TP2618 VAR X0.52
2V/10msec. div.

TP2627 VAR X0.52
(TP2628)
1V/10msec. div.

TP2610 VAR X0.52
2V/10msec. div.

TP2619 VAR X0.52
2V/10msec. div.

TP2629 VAR X0.52
(TP2630, TP2631, TP2632)
1V/10msec. div.

S4 AT SCHEMATIC DIAGRAM (6/6)

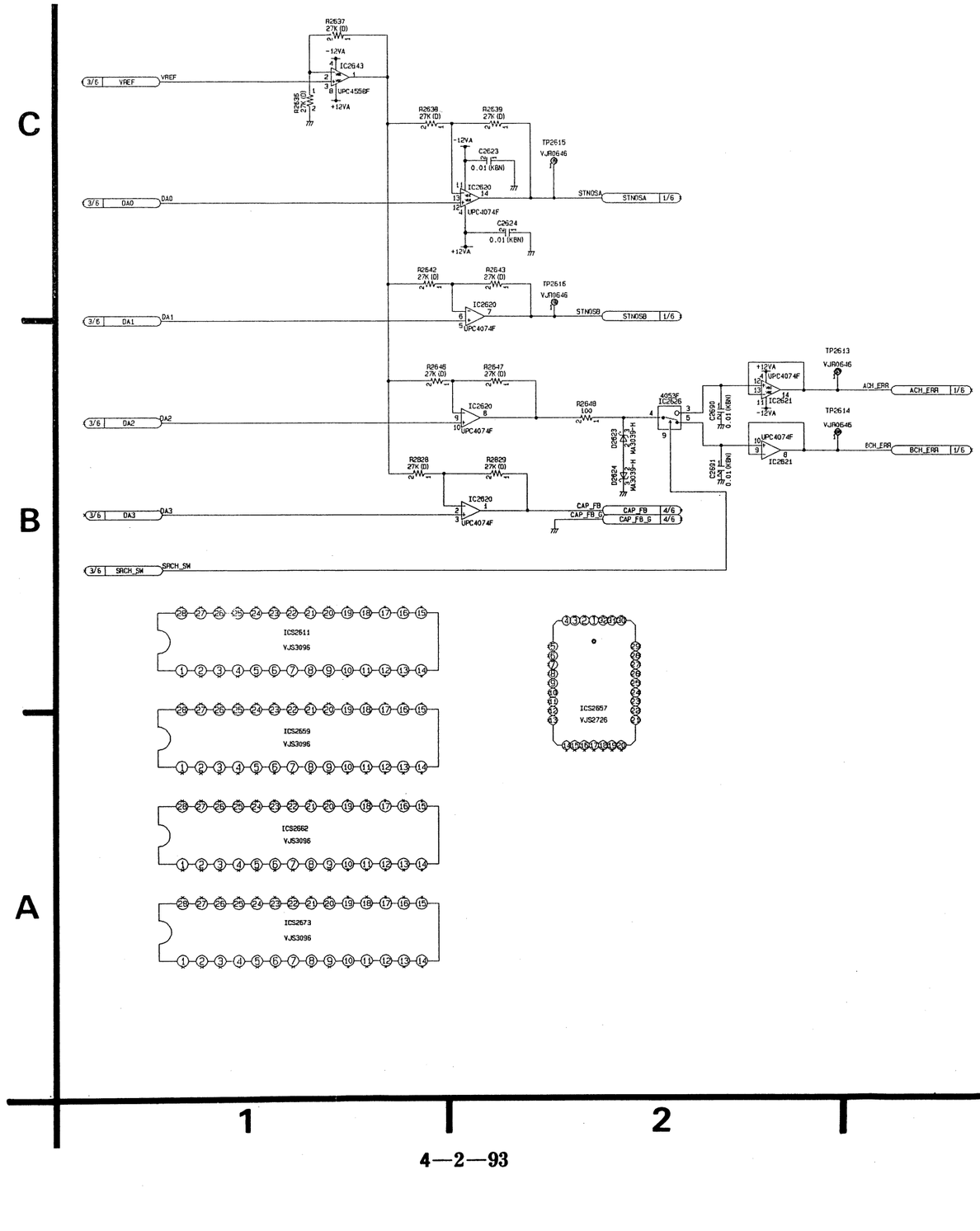

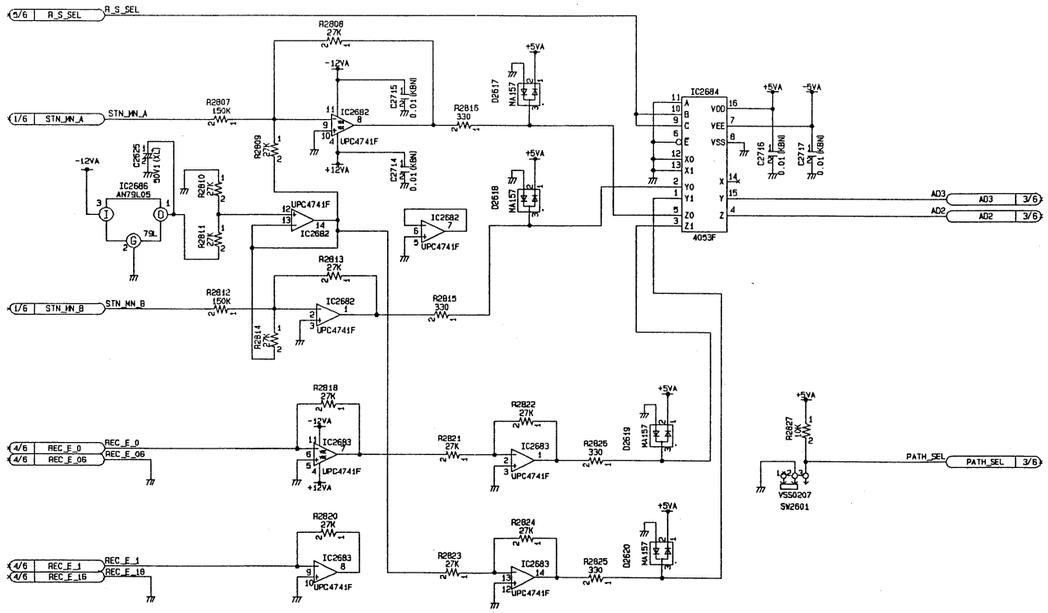

4—2—93

S4 AT SUB SCHEMATIC DIAGRAM

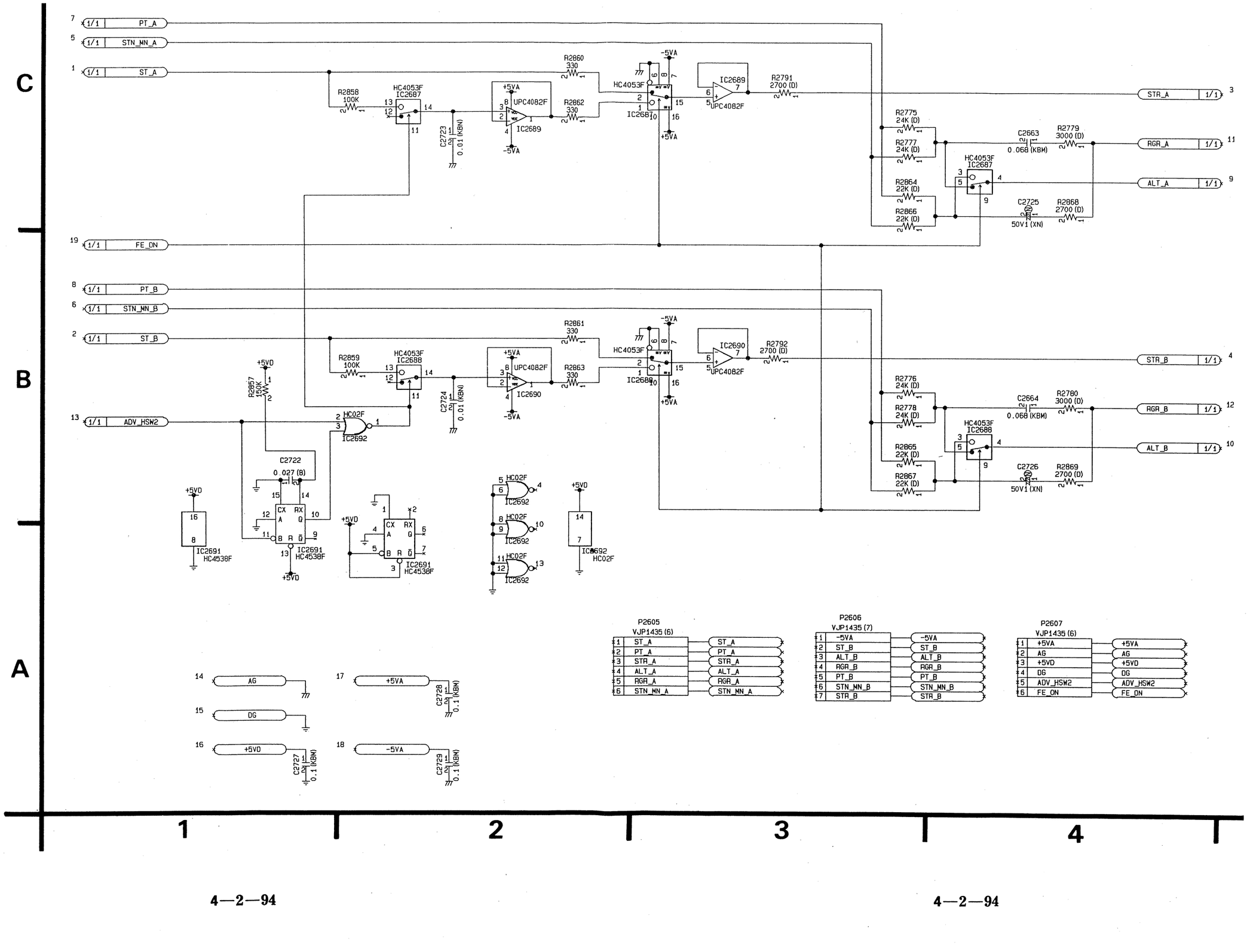

4—2—94

S5 SERVO SCHEMATIC DIAGRAM (1/4)

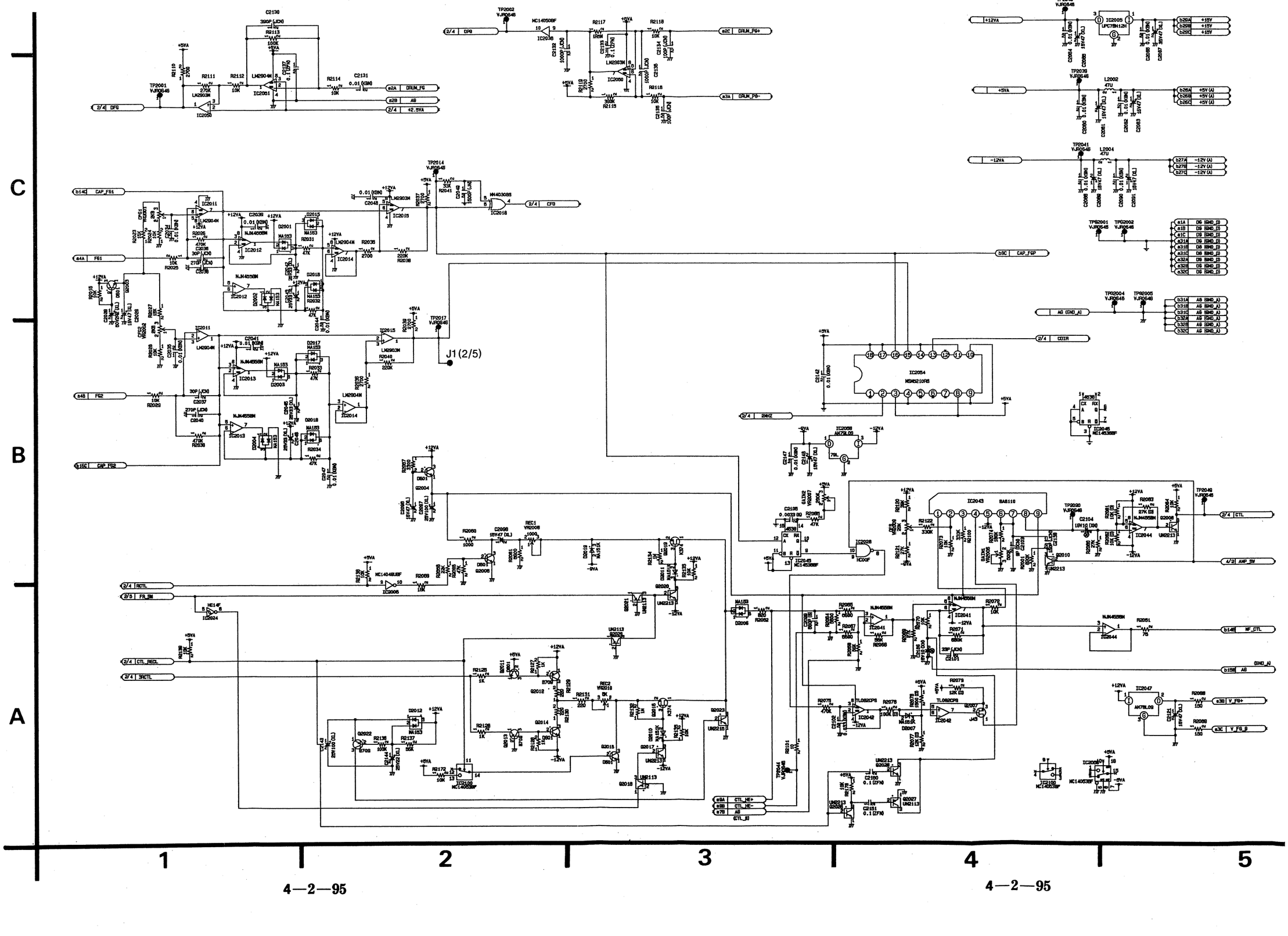

S5 SERVO SCHEMATIC DIAGRAM (2/4)

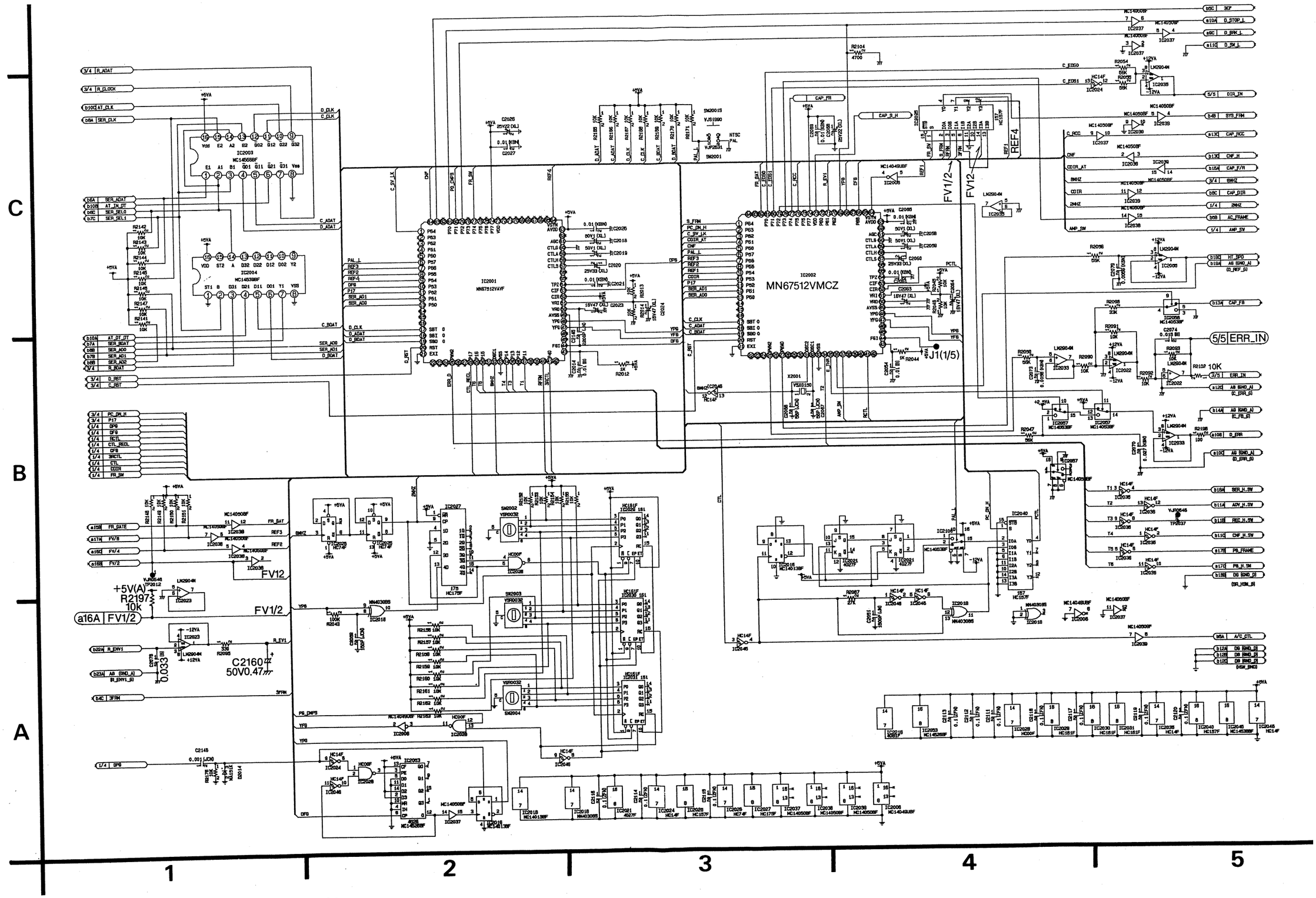

NTSC

S5 WAVEFORMS NTSC

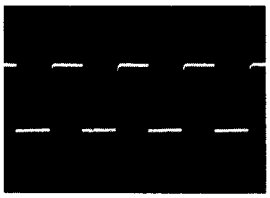

TP2001 PLAY
2V/200μsec. div.

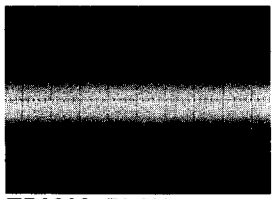

TP2039 PLAY
50mV/50μsec. div.

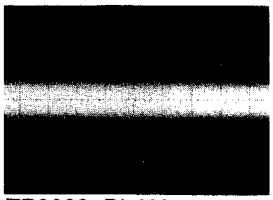

TP2203 PLAY
(TP2204–TP2210)
50mV/20μsec. div.

TP2012 PLAY
2V/10msec. div.

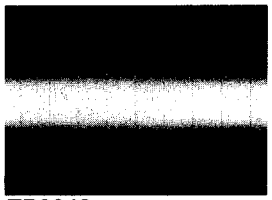

TP2040
PLAY
50mV/50μsec. div.

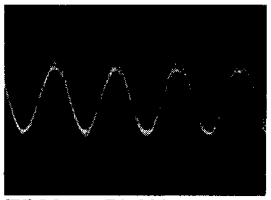

TP2211 PLAY
(TP2212, TP2213, TP2214)
1V/2msec. div.

TP2014 PLAY
2V/200μsec. div.

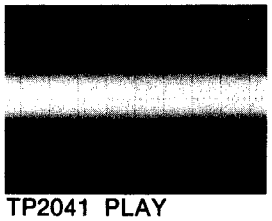

TP2041 PLAY
(TP2044)
50mV/20μsec. div.

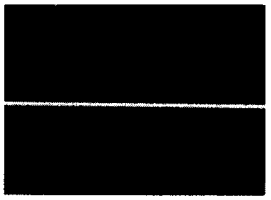

TP2215 PLAY
1V/100μsec. div.

TP2017 PLAY
2V/100μsec. div.

TP2049 PLAY
2V/5msec. div.

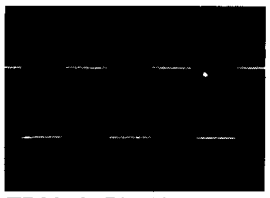

TP2216 PLAY
(TP2217, TP2218, TP2219)
2V/2msec. div.

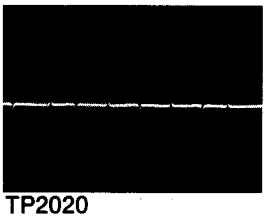

TP2020
PLAY
5V/5msec. div.

TP2201 PLAY
50mV/20μsec. div.

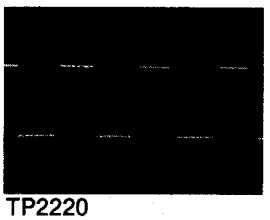

TP2220
PLAY
(TP2221)
2V/2msec. div.

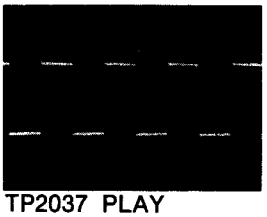

TP2037 PLAY
2V/5msec. div.

TP2202 PLAY
50mV/20μsec. div.

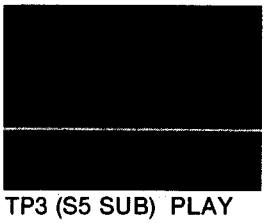

TP3 (S5 SUB) PLAY
2V/10msec. div.

PAL

S5 WAVEFORMS PAL

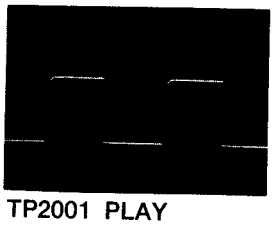

TP2001 PLAY
2V/100µsec. div.

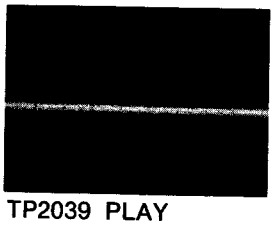

TP2039 PLAY
(TP2040)
50mV/20µsec. div.

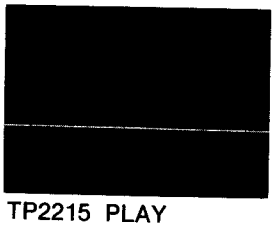

TP2215 PLAY
1V/100µsec. div.

TP2012 PLAY
2V/10msec. div.

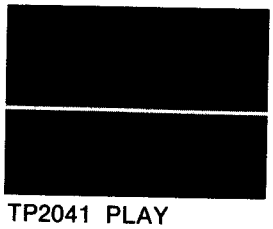

TP2041 PLAY
(TP2044)
50mV/20µsec. div.

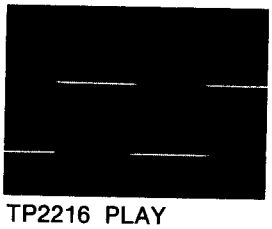

TP2216 PLAY
(TP2217)
2V/1msec. div.

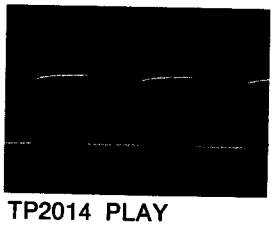

TP2014 PLAY
2V/100µsec. div.

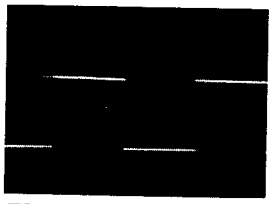

TP2049 PLAY
2V/2msec. div.

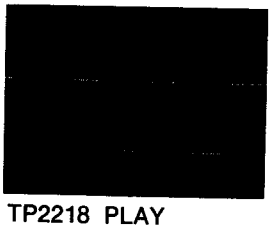

TP2218 PLAY
(TP2220)
2V/2msec. div.

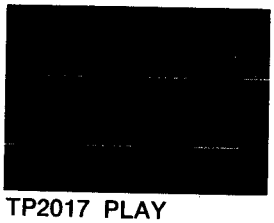

TP2017 PLAY
2V/100µsec. div.

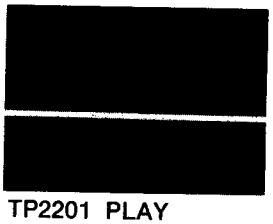

TP2201 PLAY
(TP2202)
100mV/20µsec. div.

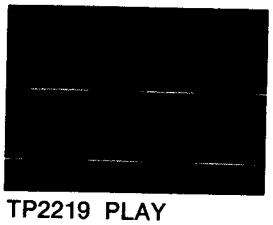

TP2219 PLAY
(TP2221)
2V/1msec. div.

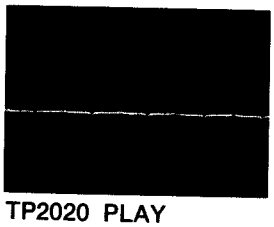

TP2020 PLAY
5V/5msec. div.

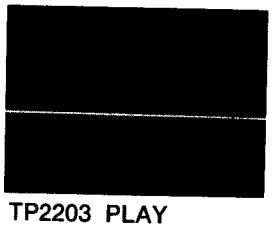

TP2203 PLAY
(TP2204–TP2210)
100mV/20µsec. div.

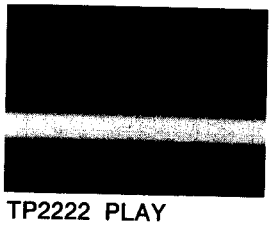

TP2222 PLAY
(TP2223–TP2226)
20mV/20µsec. div.

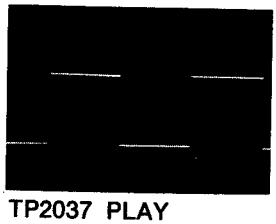

TP2037 PLAY
2V/2msec. div.

TP2211 PLAY
(TP2212, TP2213, TP2214)
1V/2msec. div.

S5 SERVO (REEL) SCHEMATIC DIAGRAM (3/4)

COMPARISON CHART BETWEEN
NTSC MODEL AND PAL MODEL
S5 SERVO P.C.B.

REF. NO.	NTSC	PAL
IC2202	VSI1155J VEP82067D	VSI1083L VEP82067E

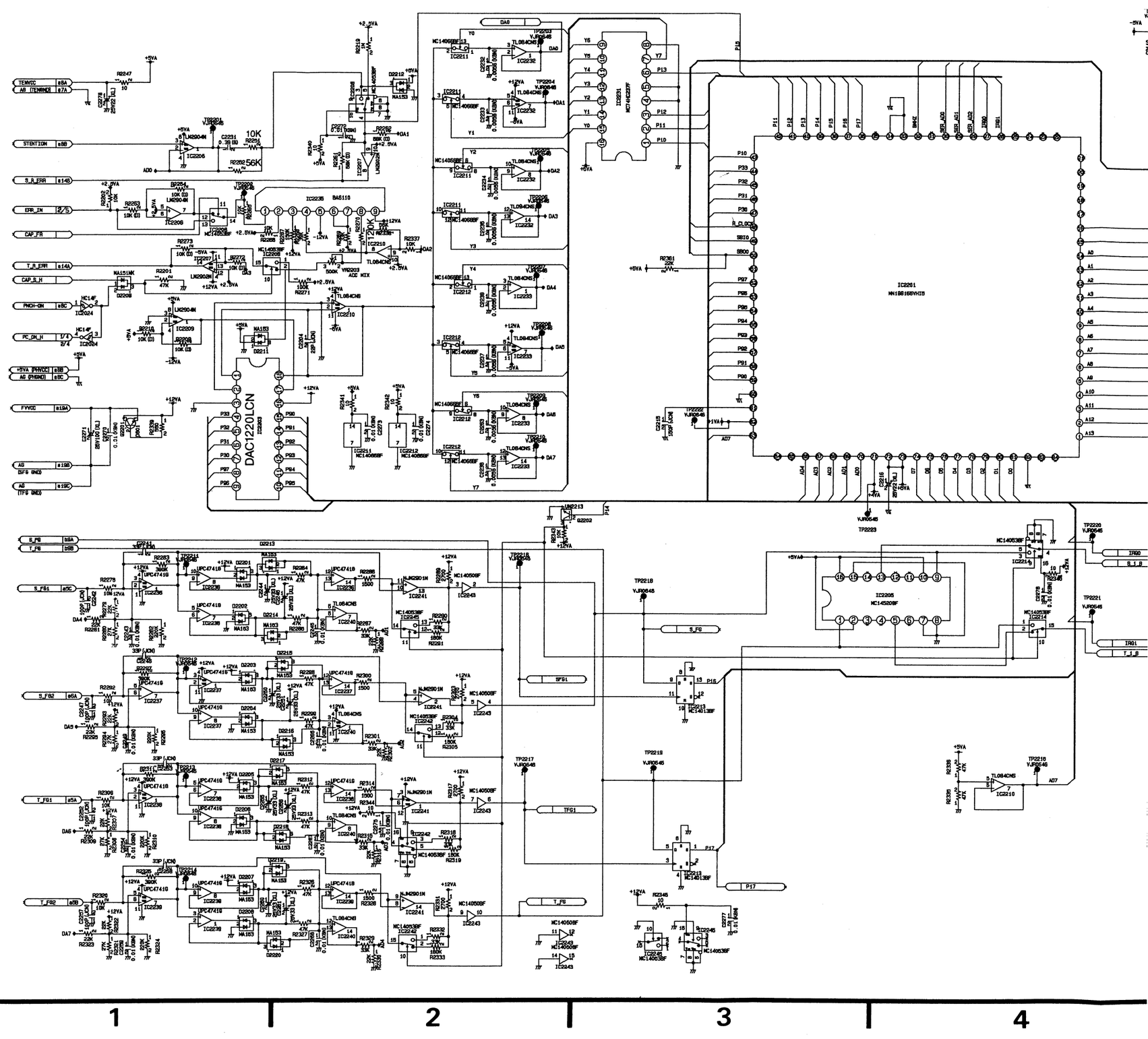

CHEMATIC DIAGRAM (3/4)

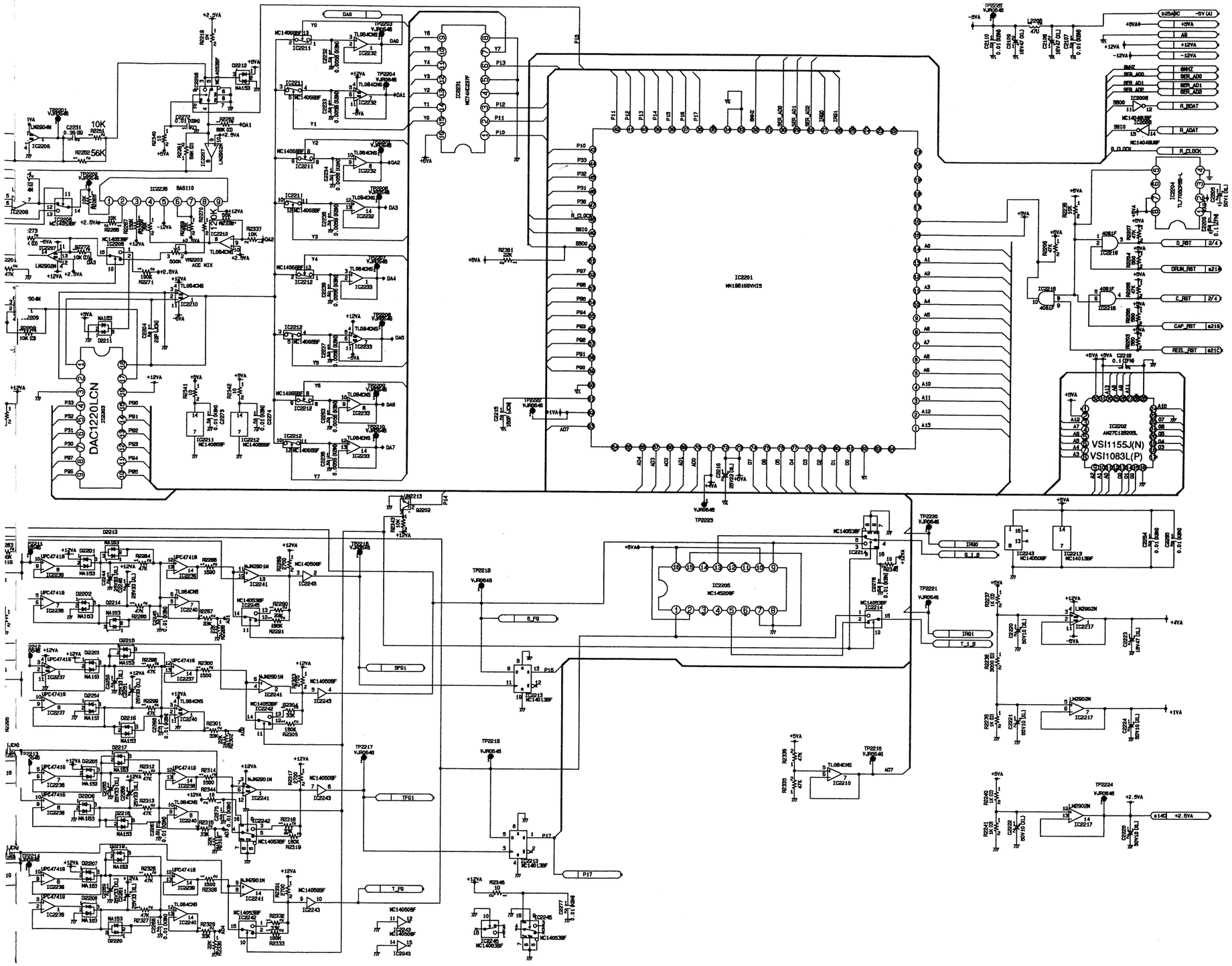

2 3 4 5

S5 SERVO (CONNECTOR) SCHEMATIC DIAGRAM (4/4) [S MOTHER (P209, P210) SCHEMATIC DIAGRAM (5/14) FOR S5]

P209	A	S 5 FROM / TO				
1	GND (D)					DG (GND_D)
2	DRUM FG	P236-1				DRUM_FG
3	DRUM PG-	P236-4				DRUM_PG-
4	FG 1	P236-6				FG1
5	TFG 1	P236-10				T_FG1
6	SFG 2	P236-14				S_FG2
7	TEN GND	P232-1				AG (TENGND)
8	TEN VCC	P232-2				TENVCC
9	CTL HEAD +	P237-1				CTL_HE+
10	DRUM STOP L	P233-2A				D_STOP_L
11						
12	CAP EOS	P233-5B				CAP_EOS
13						
14	T R ERR	P233-7B				T_R_ERR
15						
16	FV 1/2	P245-8A				
17	FV/8	P245-5A				FV/8
18						
19	FV VCC	P236-9				FVVCC
20						
21	DRUM_RST	P213-21A				DRUM_RST
22						
23						
24						
25						
26						
27						
28	-5V (D)					
29	+5V (D)					
30	+5V (D)					
31	GND (D)					DG (GND_D)
32	GND (D)					DG (GND_D)

P209	B	S 5 FROM / TO				
1	GND (D)					DG (GND_D)
2	DRUM FG GND	P236-2				AG (D_FG_GND)
3	V FG +	P236-5				V_FG+
4	FG 2	P236-8				FG2
5	T FG 2	P236-11				T_FG2
6						+5VA (PHVCC)
7	AG (CTL_S)	P237-2				AG (CTL_G)
8	S TENTION	P232-4				STENTION
9	CTL HEAD -	P237-3				CTL_HE-
10	DRUM ERR	P233-3B				D_ERR
11	DRUM REF GND	P233-4B	P209-10C			AG (D_REF_G)
12	CAP ERR	P233-5A				CAP_ERR
13	CAP REF GND	P233-4A	P209-12C			AG (C_REF_G)
14	S R ERR	P233-7A				S_R_ERR
15	FR_GATE	P207-15B				FR_GATE
16	FV/2	P245-7A	P207-16B			FV/2
17	PB TP FRAME	P245-4A				PB_FRAME
18						
19	FG GND (SFG GND)	P236-15				AG (SFG GND)
20						
21	CAP_RST	P213-21B				CAP_RST
22						
23						
24						
25						
26						
27						
28	-5V (D)					
29	+5V (D)					
30	+5V (D)					
31	GND (D)					DG (GND_D)
32	GND (D)					DG (GND_D)

P209	C
1	GND (D)
2	DRUM PG +
3	V FG GND
4	
5	S FG 1
6	
7	
8	PNCH_ON
9	DRUM BRK L
10	DRUM ERR GND
11	DRUM SW L
12	CAP ERR GND
13	CAP ACC
14	2.5V A
15	
16	FV/4
17	PB H SW
18	
19	FG GND (TFG GND)
20	
21	REEL_RST
22	
23	
24	
25	
26	
27	
28	-5V (D)
29	+5V (D)
30	+5V (D)
31	GND (D)
32	GND (D)

P210	A	S 5 FROM / TO				
1						
2						
3						
4						
5	AC-CTL	P212-5A	P208-7B			A/C_CTL
6	S-SER A DATA	P214-6A				SER_ADAT
7	S-SER B DATA	P214-7A				SER_BDAT
8	S-SER CLK	P214-8A				SER_CLK
9	S-FG	P214-9A				S_FG
10	AT_DT_DT	P208-10A				AT_DT_DT
11	ADV_H_SW	P208-11A				ADV_H.SW
12	ADV_H_SW_GND	P208-12A				DG (A_HSW_GND)
13	CAP_FB	P208-13A				CAP_FB
14	CAP_FB_G	P208-14A				AG (C_FB_GND)
15						
16	CAP F/R	P208-16A				CAP_F/R
17						
18	SER H SW	P214-19A	P256-1	P201-23B		SER_H.SW
19	HT SPEED GND	P204-20A	P202-20A			AG (HT_SPD_G)
20						
21						
22	REC ENV CH1	P235-3	P201-24C	P208-20C		R_ENV1
23	REC ENV CH1 GND	P235-4	P201-25C	P208-21C		AG (R_ENV1_G)
24						
25	-5V (A)					-5V (A)
26	+5V (A)					+5V (A)
27	-12V (A)					-12V (A)
28	+12V (A)					
29	+15V(un)					+15V
30	+8V (un)					
31	GND (A)					AG (GND_A)
32	GND (A)					AG (GND_A)

P210	B	S 5 FROM / TO				
1						
2						
3						
4	SYS-FRM	P212-5B				SYS_FRM
5						AC_FRAME
6	SER_ADR0	P214-6B	P208-6C			SER_AD0
7	SER_ADR1	P214-7B	P208-7C			SER_AD1
8	SER_ADR2	P214-8B	P208-8C			SER_AD2
9	T-FG	P214-9B				T_FG
10	AT_IN_DT	P208-10B				AT_IN_DT
11	REC_H_SW	P208-11B	P251-13B			REC_H.SW
12	REC_H_SW_GND	P208-12B				DG (R_HSW_G)
13						
14	WF CTL	P249-5				WF_CTL
15	WF CTL GND	P249-6				AG (WF_CTL_G)
16						
17						
18	SER_NSW_GND	P256-2	P201-24B			DG (SER_HSW_G)
19	REC ENV CH0	P235-1	P201-24A	P208-18C		
20						
21						
22						
23						
24						
25	-5V (A)					-5V (A)
26	+5V (A)					+5V (A)
27	-12V (A)					-12V (A)
28	+12V (A)					
29	+15V(un)					+15V
30	+8V (un)					
31	GND (A)					AG (GND_A)
32	GND (A)					AG (GND_A)

P210	C
1	
2	
3	
4	X3FRM
5	AC-CF
6	S-SER SEL 0
7	S-SER SEL 1
8	CAP DIR
9	CAP FG P
10	AT_CLK
11	CNF_H_SW
12	CNF_H_SW_GND
13	CNF_H
14	CAP_FG1
15	
16	CAP_FG2
17	
18	HT SPEED
19	REC ENV CH0 GND
20	
21	
22	
23	
24	
25	-5V (A)
26	+5V (A)
27	-12V (A)
28	+12V (A)
29	+15V(un)
30	+8V (un)
31	GND (A)
32	GND (A)

C B A

1 2 3 4 5

M (4/4) [S MOTHER (P209, P210) SCHEMATIC DIAGRAM (5/14) FOR S5]

P209	B	S 5 FROM / TO			
1	GND (D)				
2	DRUM FG GND	P236-2			
3	V FG +	P236-5			
4	FG 2	P236-8			
5	T FG 2	P236-11			
6					
7	AG (CTL_S)	P237-2			
8	S TENTION	P232-4			
9	CTL HEAD -	P237-3			
10	DRUM ERR	P233-3B			
11	DRUM REF GND	P233-4B	P209-10C		
12	CAP ERR	P233-5A			
13	CAP REF GND	P233-4A	P209-12C		
14	S R ERR	P233-7A			
15	FR_GATE	P207-15B			
16	FV/2	P245-7A	P207-16B		
17	PB TP FRAME	P245-4A			
18					
19	FG GND (SFG GND)	P236-15			
20					
21	CAP_RST	P213-21B			
22					
23					
24					
25					
26					
27					
28	-5V (D)				
29	+5V (D)				
30	+5V (D)				
31	GND (D)				
32	GND (D)				

DG (GND_D)
AG (D_FG_GND)
V_FG+
FG2
T_FG2
+5VA (PHVCC)
AG (CTL_G)
STENTION
CTL_HE-
D_ERR
AG (D_REF_G)
CAP_ERR
AG (C_REF_G)
S_R_ERR
FR_GATE
FV/2
PB_FRAME
AG (SFG GND)
CAP_RST
DG (GND_D)
DG (GND_D)

P209	C	S 5 FROM / TO			
1	GND (D)				
2	DRUM PG +	P236-3			
3	V FG GND	P236-7			
4					
5	S FG 1	P236-13			
6					
7					
8	PNCH_ON	P213-23A	P233-10B		
9	DRUM BRK L	P233-2B			
10	DRUM ERR GND	P209-11B	P233-4B		
11	DRUM SW L	P233-3A			
12	CAP ERR GND	P209-13B	P233-4A		
13	CAP ACC	P233-6B			
14	2.5V A	P233-8B			
15					
16	FV/4	P245-6A			
17	PB H SW	P245-3A			
18					
19	FG GND (TFG GND)	P236-12			
20					
21	REEL_RST	P213-21C			
22					
23					
24					
25					
26					
27					
28	-5V (D)				
29	+5V (D)				
30	+5V (D)				
31	GND (D)				
32	GND (D)				

DG (GND_D)
DRUM_PG+
V_FG_G
S_FG1
AG (PHGND)
PNCH-ON
D_BRK_L (DRUM_BRK_L)
AG (DRUM_ERR_GND)
D_SW_L (DRUM_SW_L)
AG (CAP_ERR_GND)
CAP_ACC
+2.5VA
FV/4
PB_H.SW
AG (TFG GND)
REEL_RST
DG (GND_D)
DG (GND_D)

P210	B	S 5 FROM / TO			
1					
2					
3					
4	SYS-FRM	P212-5B			
5					
6	SER_ADR0	P214-6B	P208-6C		
7	SER_ADR1	P214-7B	P208-7C		
8	SER_ADR2	P214-8B	P208-8C		
9	T-FG	P214-9B			
10	AT_IN_DT	P208-10B			
11	REC_H_SW	P208-11B	P251-13B		
12	REC_H_SW_GND	P208-12B			
13					
14	WF CTL	P249-5			
15	WF CTL GND	P249-6			
16					
17					
18	SER_NSW_GND	P256-2	P201-24B		
19	REC ENV CH0	P235-1	P201-24A	P208-18C	
20					
21					
22					
23					
24					
25	-5V (A)				
26	+5V (A)				
27	-12V (A)				
28	+12V (A)				
29	+15V (un)				
30	+8V (un)				
31	GND (A)				
32	GND (A)				

SYS_FRM
AC_FRAME
SER_AD0
SER_AD1
SER_AD2
T_FG
AT_IN_DT
REC_H.SW
DG (R_HSW_G)
WF_CTL
AG (WF_CTL_G)
DG (SER_HSW_G)
-5V (A)
+5V (A)
-12V (A)
+15V
AG (GND_A)
AG (GND_A)

P210	C	S 5 FROM / TO			
1					
2					
3					
4	X3FRM	P212-4C			
5	AC-CF	P212-5C			
6	S-SER SEL 0	P214-6C			
7	S-SER SEL 1	P214-7C			
8	CAP DIR	P214-8C	P216-8C	P251-20B	
9	CAP FG P	P214-9C	P216-9C	P251-19B	
10	AT_CLK	P208-10C			
11	CNF_H_SW	P208-11C			
12	CNF_H_SW_GND	P208-12C			
13	CNF_H	P208-13C			
14	CAP_FG1	P208-14C			
15					
16	CAP_FG2	P208-16C			
17					
18	HT SPEED	P204-20C	P202-20C		
19	REC ENV CH0 GND	P235-2	P201-25A	P208-19C	
20					
21					
22					
23					
24					
25	-5V (A)				
26	+5V (A)				
27	-12V (A)				
28	+12V (A)				
29	+15V (un)				
30	+8V (un)				
31	GND (A)				
32	GND (A)				

3FRM
3CF
SER_SEL0 (S_SER_SEL_0)
SER_SEL1 (S_SER_SEL_1)
CAP_DIR
CAP_FGP
AT_CLK
CNF_H.SW
DG (CNF_H.SW_GND)
CNF_H
CAP_FG1
CAP_FG2
HT_SPD (HT_SPEED)
AG (REC_ENV_CH0_GND)
-5V (A)
+5V (A)
-12V (A)
+15V
AG (GND_A)
AG (GND_A)

3 4 5 6

S5 SERVO SUB SCHEMATIC DIAGRAM

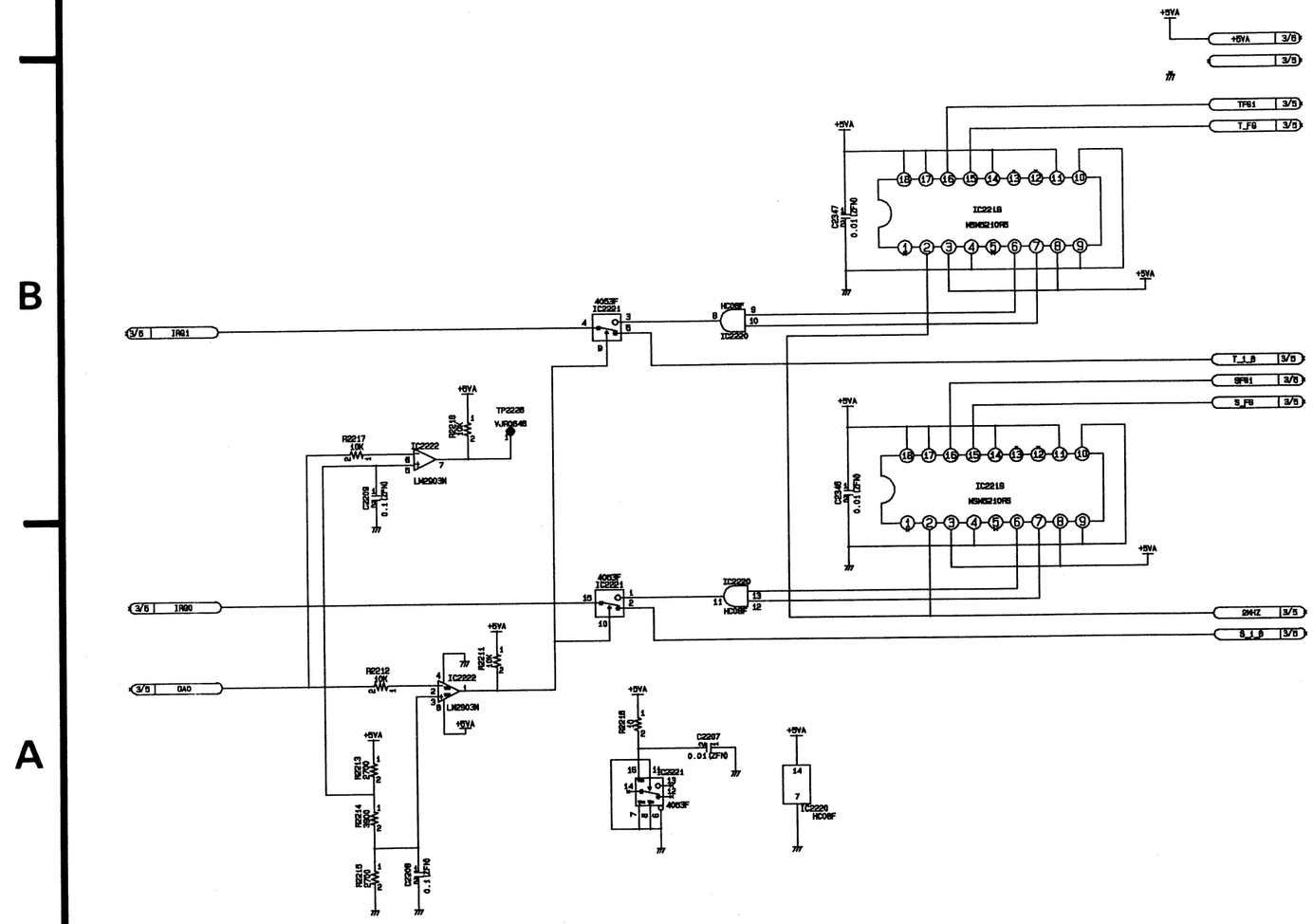

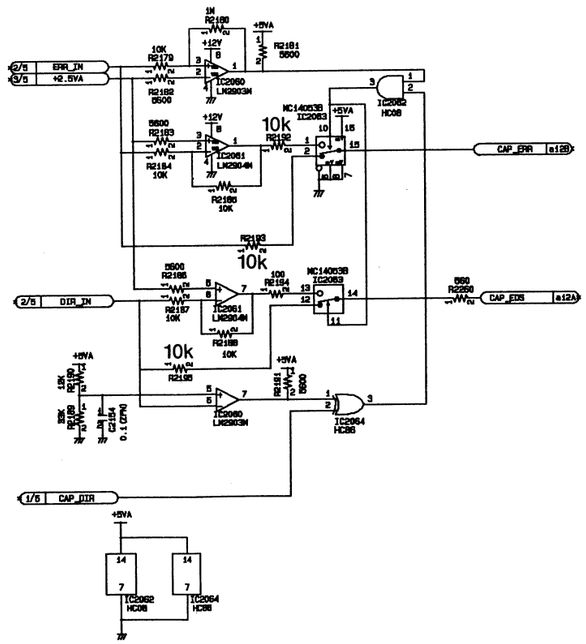

4—2—99

4—2—99

S6 A1 TIME CODE SCHEMATIC DIAGRAM (1/6)

COMPARISON CHART BETWEEN
NTSC MODEL AND PAL MODEL
S6 TIME CODE P.C.B.

REF. NO.	NTSC	PAL
IC3	VSI1094J	VSI1095J
X4	VSX0098	VSX0097
X7	VSX0097	VSX0098
	VEP86091F	VEP86091G
	VEP86133A	VEP86133B

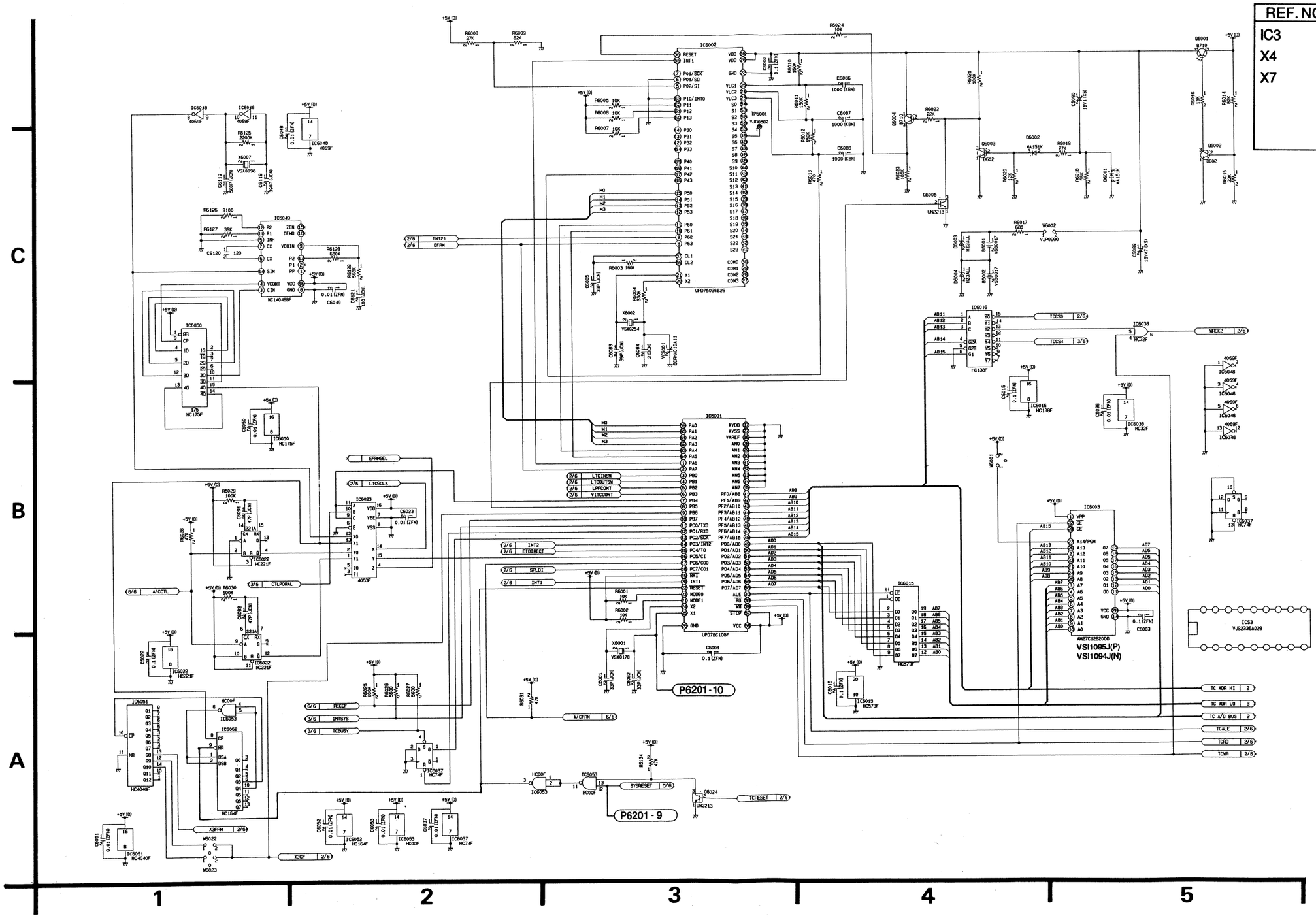

4—2—100

S6 A1 TIME CODE SCHEMATIC DIAGRAM (2/6)

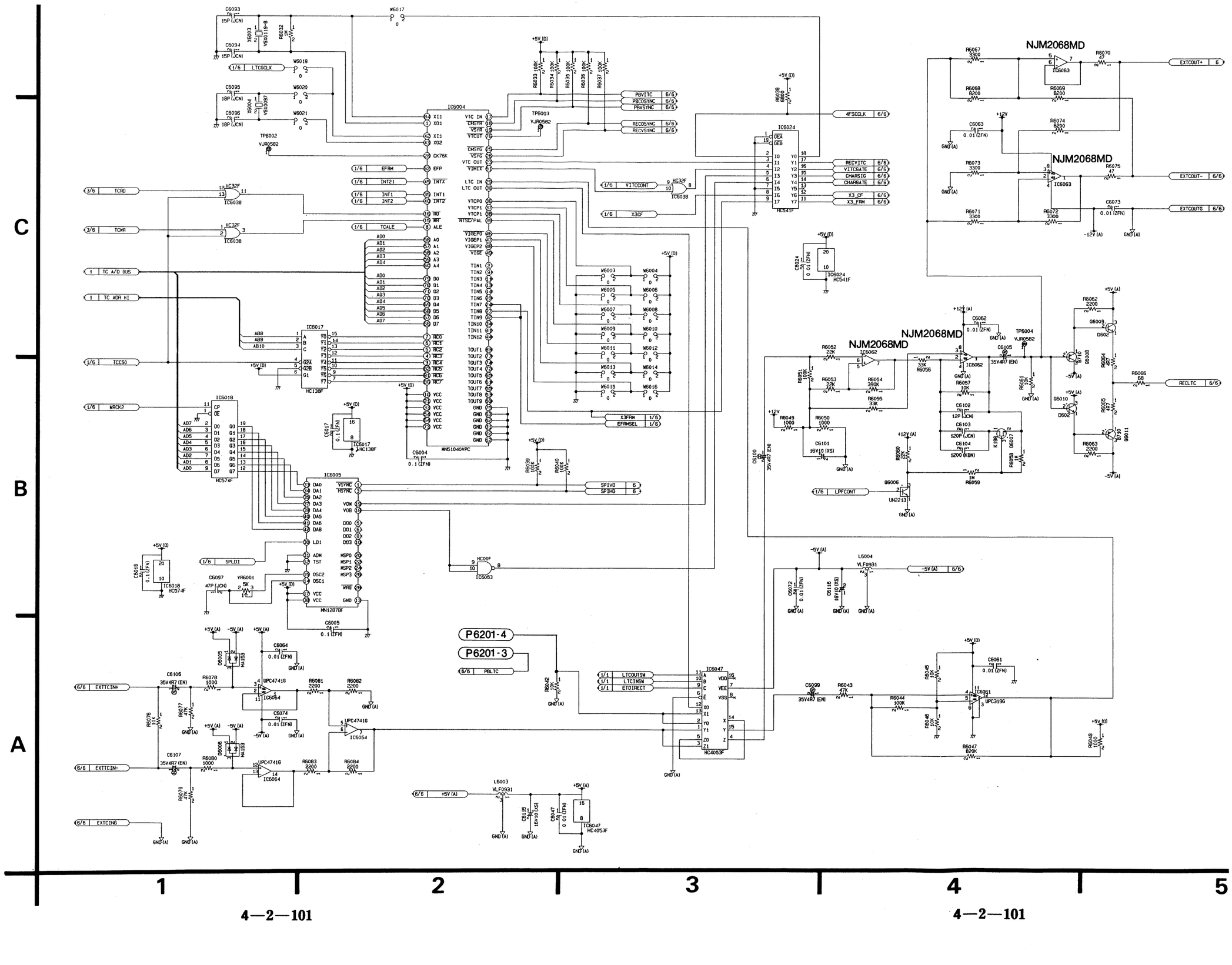

S6 A1 TIME CODE SCHEMATIC DIAGRAM (3/6)

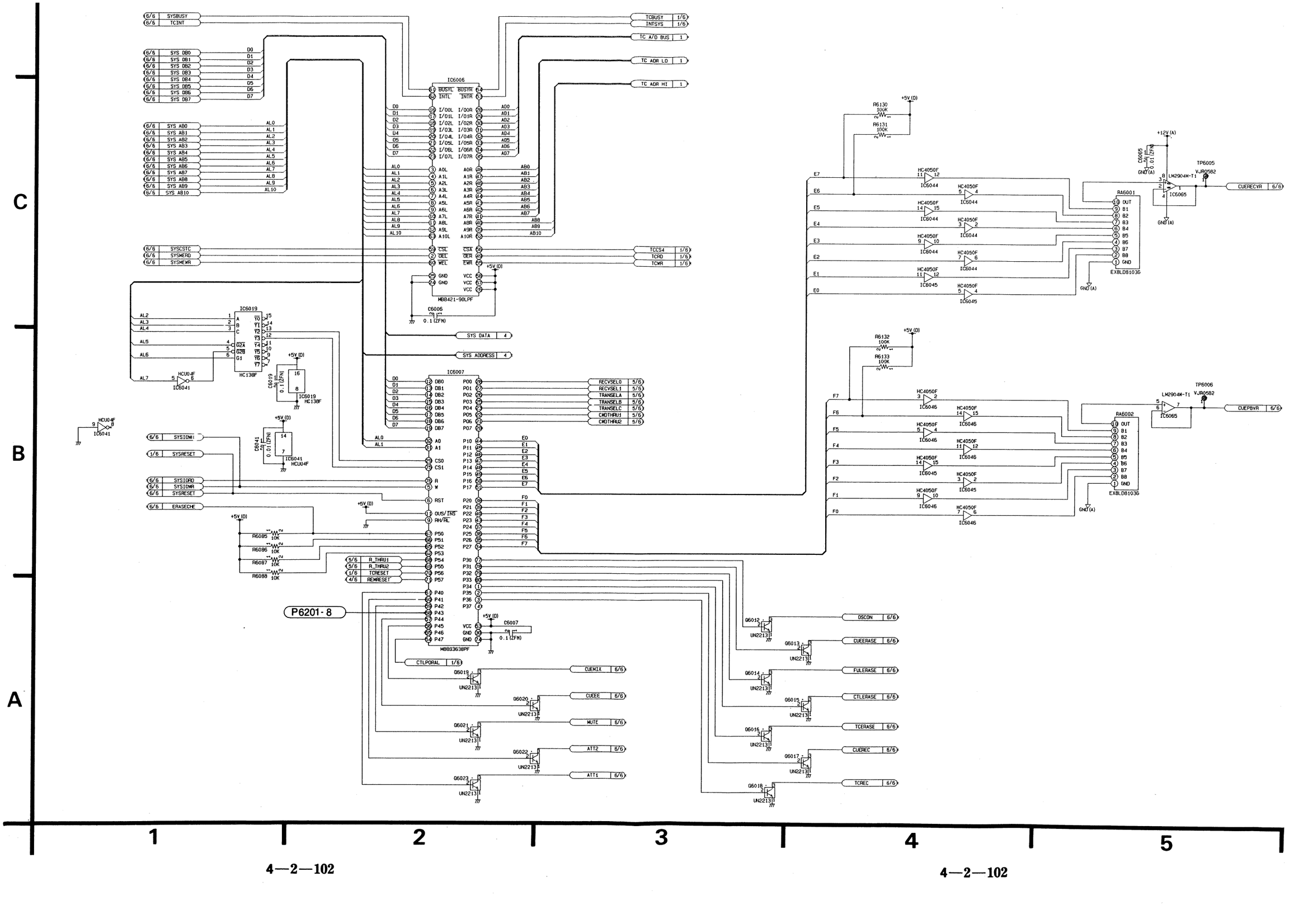

4—2—102

NTSC

S6 WAVEFORMS NTSC

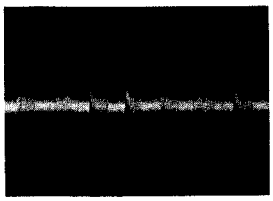

TP6001 E-E2
100mV/2msec. div.

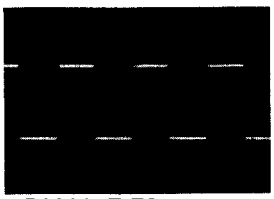

TP6002 E-E2
2V/5μsec. div.

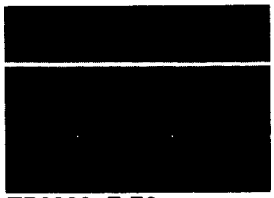

TP6003 E-E2
2V/5msec. div.

TP6004 REC
2V/1msec. div.

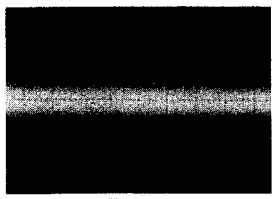

TP6005 E-E2
(TP6006)
100mV/20μsec. div.

PAL

S6 WAVEFORMS PAL

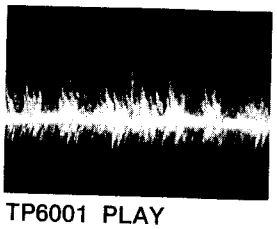

TP6001 PLAY
50mV/2msec. div.

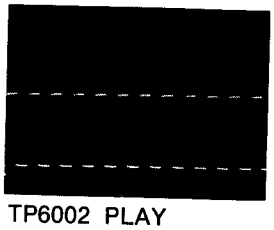

TP6002 PLAY
2V/20μsec. div.

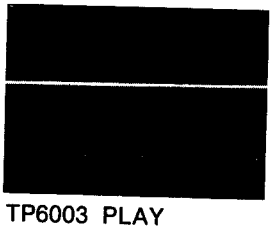

TP6003 PLAY
2V/10msec. div.

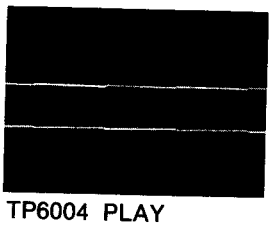

TP6004 PLAY
2V/200μsec. div.

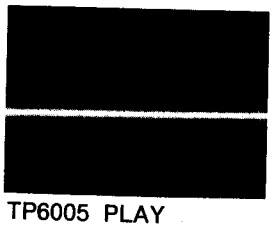

TP6005 PLAY
(TP6006)
100mV/20μsec. div.

S6 A1 TIME CODE SCHEMATIC DIAGRAM (4/6)

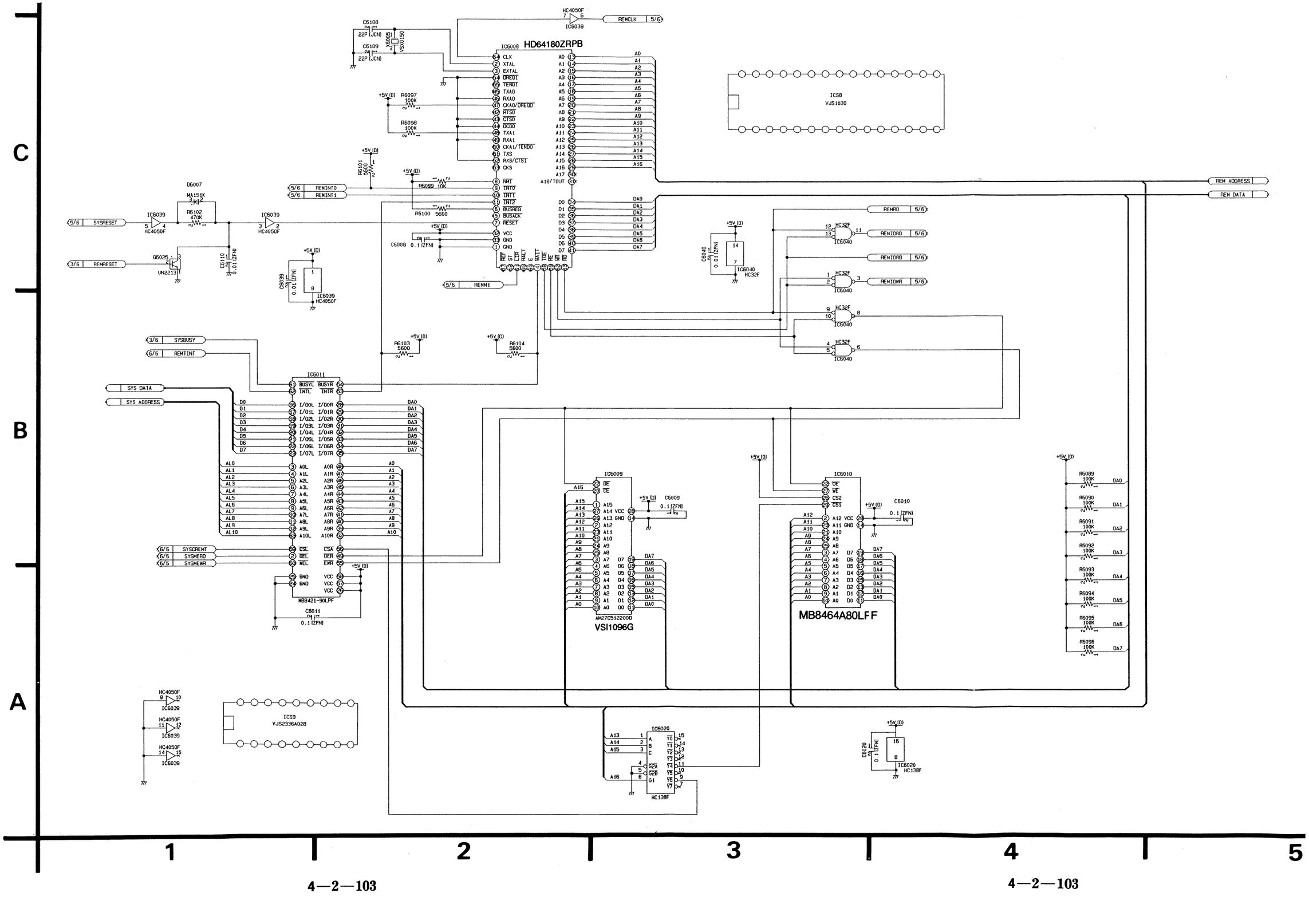

4—2—103

S6 A1 TIME CODE SCHEMATIC DIAGRAM (5/6)

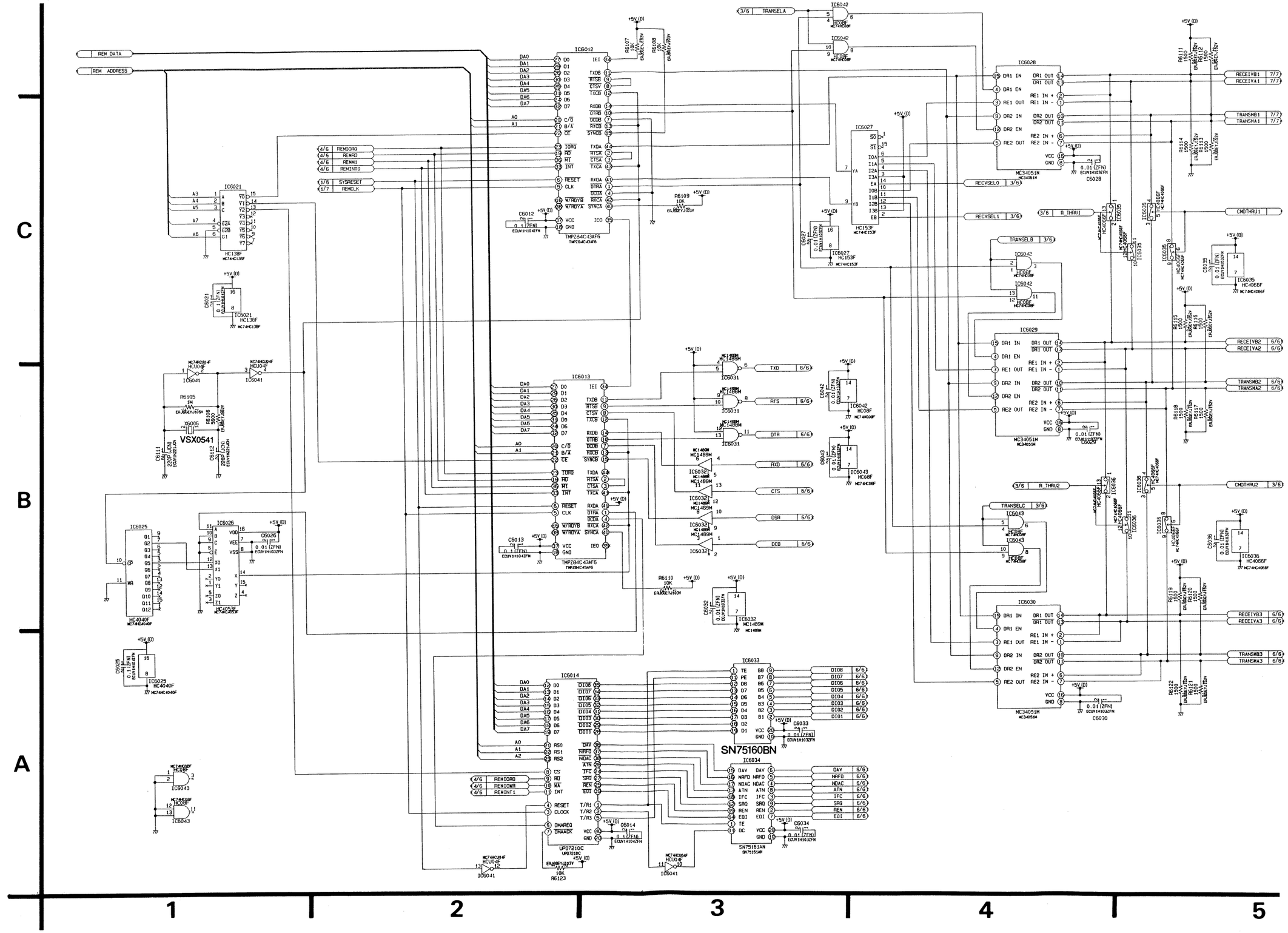

4—2—104

S6 A1 TIME CODE SCHEMATIC DIAGRAM (6/6) [S MOTHER (P211, P212) SCHEMATIC DIAGRAM (6/14) FOR S6]

P211	A	S 6 FROM / TO			
1	GND (D)				
2	AV AD 0	P213-2A	P215-2A	P217-2A	P245-30B
3	AV AD 3	P213-3A	P215-3A	P217-3A	P245-27B
4	AV AD 6	P213-4A	P215-4A	P217-4A	P245-24B
5	AV AD 8	P213-5A	P215-5A	P217-5A	P245-21B
6	AV AD 11	P213-6A	P215-6A	P217-6A	P245-18B
7	AV AD 14	P213-7A	P215-7A	P217-7A	P245-15B
8	AV RD	P213-8A	P215-8A	P217-8A	P245-12B
9	SYS DB 0	P213-9A	P261-1	P241-4B	
10	SYS DB 1	P213-10A	P261-2	P241-5B	
11	SYS DB 2	P213-11A	P261-3	P241-6B	
12	SYS DB 3	P213-12A	P261-4	P241-7B	
13	SYS DB 4	P213-13A	P261-5	P241-8B	
14	SYS DB 5	P213-14A	P261-6	P241-9B	
15	SYS DB 6	P213-15A	P261-7	P241-10B	
16	SYS DB 7	P213-16A	P261-8	P241-11B	
17	TC INT	P213-17A			
18					
19					
20					
21	FULL ERASE	P205-21A			
22	CUE ERASE	P205-22A			
23	CUE REC	P205-23A			
24	MUTE	P205-24A			
25	CUE REC VR	P205-25A			
26	REC LTC	P205-19A			
27					
28	-5V (D)				
29	+5V (D)				
30	+5V (D)				
31	GND (D)				
32	GND (D)				

D0, D1, D2, D3, D4, D5, D6, D7, TCINT, FULERASE, CUEERASE, CUEREC, MUTE, CUERECVR, RECLTC, -5V (D), +5V (D), +5V (D), GND (D), GND (D)

+5V(D) — P6201-6
−5V(A) — P6201-5
P6201-7

P211	B	S 6 FROM / TO			
1	GND (D)				
2	AV AD 1	P213-2B	P215-2B	P217-2B	P245-29B
3	AV AD 4	P213-3B	P215-3B	P217-3B	P245-26B
4	AV AD 7	P213-4B	P215-4B	P217-4B	P245-23B
5	AV AB 9	P213-5B	P215-5B	P217-5B	P245-20B
6	AV AB 12	P213-6B	P215-6B	P217-6B	P245-17B
7	AV AB 15	P213-7B	P215-7B	P217-7B	P245-14B
8	AV WR	P213-8B	P215-8B	P217-8B	P245-11B
9	SYS AB 0	P213-9B	P260-1	P241-4A	
10	SYS AB 1	P213-10B	P260-2	P241-5A	
11	SYS AB 2	P213-11B	P260-3	P241-6A	
12	SYS AB 3	P213-12B	P260-4	P241-7A	
13	SYS AB 4	P213-13B	P260-5	P241-8A	
14	SYS AB 5	P213-14B	P260-6	P241-9A	
15	SYS AB 6	P213-15B	P260-7	P241-10A	
16	SYS AB 7	P213-16B	P260-8	P241-11A	
17	SYS AB 8	P213-17B			
18	SYS AB 9	P213-18B			
19	SYS AB 10	P213-19B			
20					
21	OSC ON	P205-21B			
22	TC ERASE	P205-22B			
23	TC REC	P205-23B			
24	ATT 1	P205-24B			
25	CUE PB VR	P205-25B			
26	PB LTC	P205-19B			
27					
28	-5V (D)				
29	+5V (D)				
30	+5V (D)				
31	GND (D)				
32	GND (D)				

AL0, AL1, AL2, AL3, AL4, AL5, AL6, AL7, AL8, AL9, AL10, OSCON, TCERASE, TCREC, ATT1, CUEPBVR, PBLTC, -5V (D), +5V (D), +5V (D), GND (D), GND (D)

+12V(A) — A
−12V(A) — B

P211	C	S 6 FROM / TO				
1	GND (D)					
2	AV AD 2	P213-2C	P215-2C	P217-2C	P245-28B	
3	AV AD 5	P213-3C	P215-3C	P217-3C	P245-25B	
4	AV ALE	P213-4C	P215-4C	P217-4C	P245-22B	
5	AV AB 10	P213-5C	P215-5C	P217-5C	P245-19B	
6	AV AB 13	P213-6C	P215-6C	P217-6C	P245-16B	
7	AV SYS INT	P213-7C	P245-13B			
8	AV BUSY	P213-8C	P245-10B			
9	SYS RESET	P213-9C	P260-9	P241-12B	P233-10A	P205-9C
10	SYS IORD	P213-10C	P260-10	P241-12A		
11	SYS IOWR	P213-11C	P260-11	P241-13A		
12	SYS MERD	P213-12C				
13	SYS MEWR	P213-13C				
14	SYS BUSY	P213-14C				
15	SYS CS TC	P213-15C				
16	SYS CS REMT	P213-16C				
17	REMT INT	P213-17C				
18	SYS CS VIDEO	P213-18C				
19						
20						
21	ERASE CHECK	P205-21C				
22	CTL ERASE	P205-22C				
23	CUE EE	P205-23C				
24	ATT 2	P205-24C				
25	CUE MIX	P205-25C				
26						
27						
28	-5V (D)					
29	+5V (D)					
30	+5V (D)					
31	GND (D)					
32	GND (D)					

P212	A	S 6 FROM / TO			
1					
2	T/C IN+	P238-2			
3	T/C OUT+	P238-5			
4					
5	AC-CTL	P210-5A	P208-7B		
6	TRANSMIT A 1	P263-1B			
7	TRANSMIT B 1	P263-1A			
8	RECEIVE A 1	P263-2B			
9	RECEIVE B 1	P263-2A			
10	TXD	P263-4B			
11	CTS	P263-5A			
12	CHAR SIG	P251-12B			
13	SPI HD	P251-18B			
14	PB VITC	P251-16B			
15	REC CF	P213-19A	P251-10B		
16	4fsc CLK	P249-7			
17	DIO 1	P263-9B			
18	DIO 4	P263-12B			
19	DIO 7	P263-15B			
20	DAV	P263-9A			
21	ATN	P263-12A			
22	REM	P263-15A			
23					
24					
25	-5V (A)				
26	+5V (A)				
27	-12V (A)				
28	+12V (A)				
29	+15V (un)				
30	+8V (un)				
31	GND (A)				
32	GND (A)				

EXTTCIN+, EXTCOUT+, A/CCTL, TRANSMA1, TRANSMB1, RECEIVA1, RECEIVB1, TXD, CTS, CHARSIG, SPIHD, PBVITC, RECCF, 4FSCCLK, DIO1, DIO4, DIO7, DAV, ATN, REN

P6201-2

-5V (A), +5V (A), -12V (A), +12V (A), +15V (UN), +8V (UN), GND (A), GND (A)

P6201-1

P212	B	S 6 FROM / TO			
1					
2	T/C IN-	P238-3			
3	T/C OUT-	P238-6			
4					
5	SYS_FRM	P210-4B			
6	TRANSMIT A 2	P263-17B			
7	TRANSMIT B 2	P263-17A			
8	RECEIVE A 2	P263-18B			
9	RECEIVE B 2	P263-18A			
10	RXD	P263-4A			
11	DSR	P263-6A			
12	CHAR GATE	P251-11B			
13	SPI VD	P251-17B			
14	PB COMP SYNC	P251-15B			
15	REC VITC	P251-9B			
16	REC COMP SYNC	P251-7B			
17	DIO 2	P263-10B			
18	DIO 5	P263-13B			
19	DIO 8	P263-16B			
20	NRFD	P263-10A			
21	IFC	P263-13A			
22	EOI	P263-16A			
23					
24					
25	-5V (A)				
26	+5V (A)				
27	-12V (A)				
28	+12V (A)				
29	+15V (un)				
30	+8V (un)				
31	GND (A)				
32	GND (A)				

EXTTCIN-, EXTCOUT-, A/CFRM, TRANSMA2, TRANSMB2, RECEIVA2, RECEIVB2, RXD, DSR, CHARGATE, SPIVD, PBCOSYNC, RECVITC, RECOSYNC, DIO2, DIO5, DIO8, NRFD, IFC, EOI, -5V (A), +5V (A), -12V (A), +12V (A), +15V (UN), +8V (UN), GND (A), GND (A)

P212	C	S 6 FROM / TO			
1					
2	T/C IN GND	P238-1			
3	T/C OUT GND	P238-4			
4	X3FRM	P210-4C			
5	AC-CF	P210-5C			
6	TRANSMIT A 3	P263-19B			
7	TRANSMIT B 3	P263-19A			
8	RECEIVE A 3	P263-20B			
9	RECEIVE B 3	P263-20A			
10	RTS	P263-5B			
11	DTR	P263-7B			
12	DCD	P263-6B			
13					
14	PB V SYNC	P251-14B			
15	VITC GATE	P251-8B			
16	REC V SYNC	P213-18A	P251-6B		
17	DIO 3	P263-11B			
18	DIO 6	P263-14B			
19					
20	NDAC	P263-11A			
21	SRQ	P263-14A			
22					
23					
24					
25	-5V (A)				
26	+5V (A)				
27	-12V (A)				
28	+12V (A)				
29	+15V (un)				
30	+8V (un)				
31	GND (A)				
32	GND (A)				

C
B
A
1
2
3
4
5

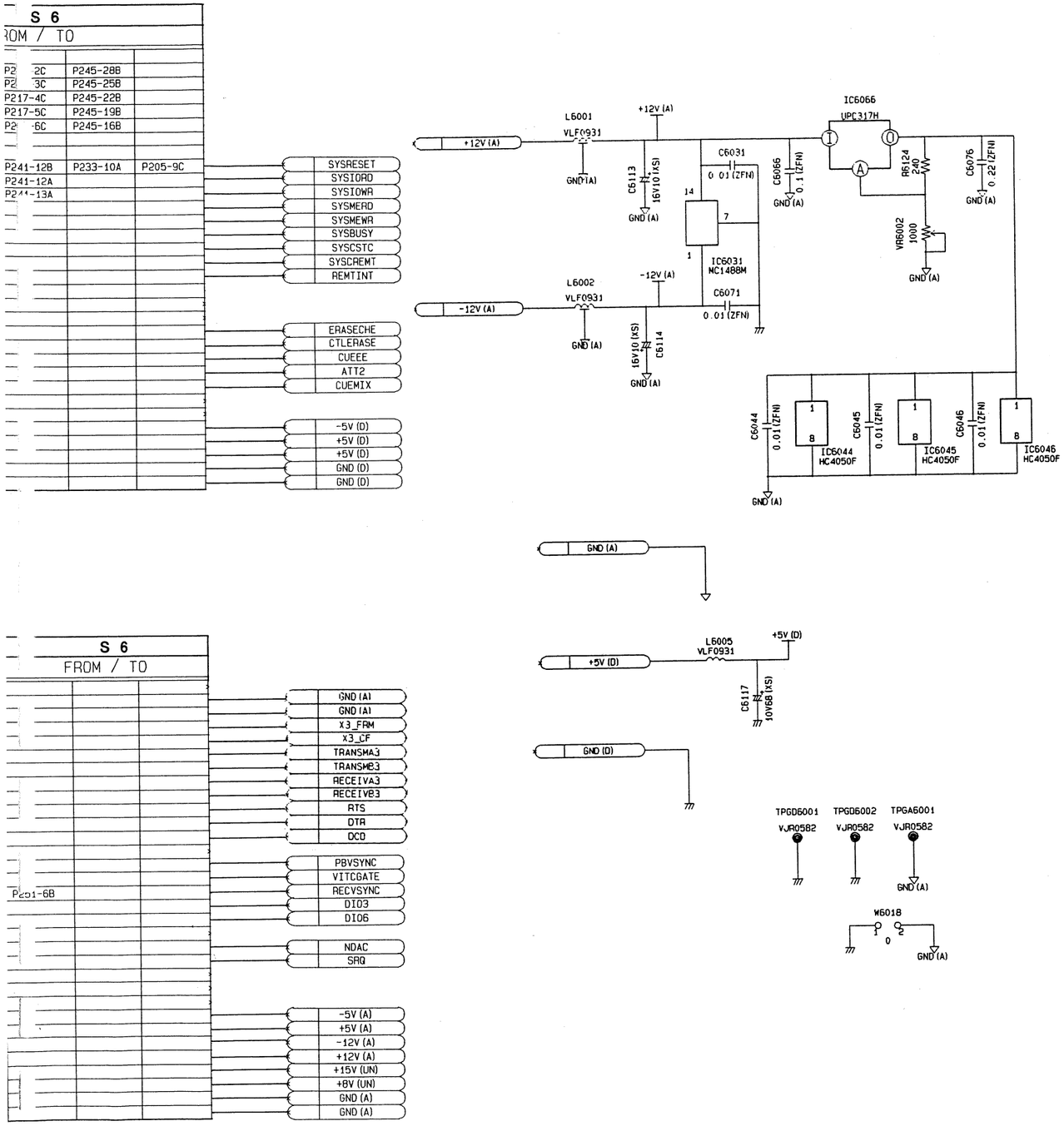
S 6
ROM / TO
P2 2C P245-28B
P2 3C P245-25B
P217-4C P245-22B
P217-5C P245-19B
P2 6C P245-16B
P241-12B P233-10A P205-9C
P241-12A
P241-13A
SYSRESET
SYSIORD
SYSIOWR
SYSMERD
SYSMEWR
SYSBUSY
SYSCSTC
SYSCREMT
REMTINT
ERASECHE
CTLERASE
CUEEE
ATT2
CUEMIX
-5V (D)
+5V (D)
+5V (D)
GND (D)
GND (D)
+12V (A)
L6001
VLF0931
GND (A)
C6113
16V10 (KS)
C6031
0.01 (ZFN)
C6066
0.1 (ZFN)
IC6066
UPC317H
R6124
240
C6076
0.22 (ZFN)
VR6002
1000
14
7
1
IC6031
MC1488M
-12V (A)
L6002
VLF0931
C6114
C6071
0.01 (ZFN)
C6044
C6045
C6046
IC6044
HC4050F
IC6045
HC4050F
IC6046
HC4050F
GND (A)
L6005
VLF0931
C6117
10V68 (KS)
TPGD6001
TPGD6002
TPGA6001
VJR0582
W6018
GND (A)
S 6
FROM / TO
GND (A)
X3_FRM
X3_CF
TRANSMA3
TRANSMB3
RECEIVA3
RECEIVB3
RTS
DTR
DCD
P261-6B
P8VSYNC
VITCGATE
RECVSYNC
DIO3
DIO6
NDAC
SRQ
-5V (A)
+5V (A)
-12V (A)
+12V (A)
+15V (UN)
+8V (UN)
GND (A)
6
7

S6 A1 TIME CODE SUB SCHEMATIC DIAGRAM

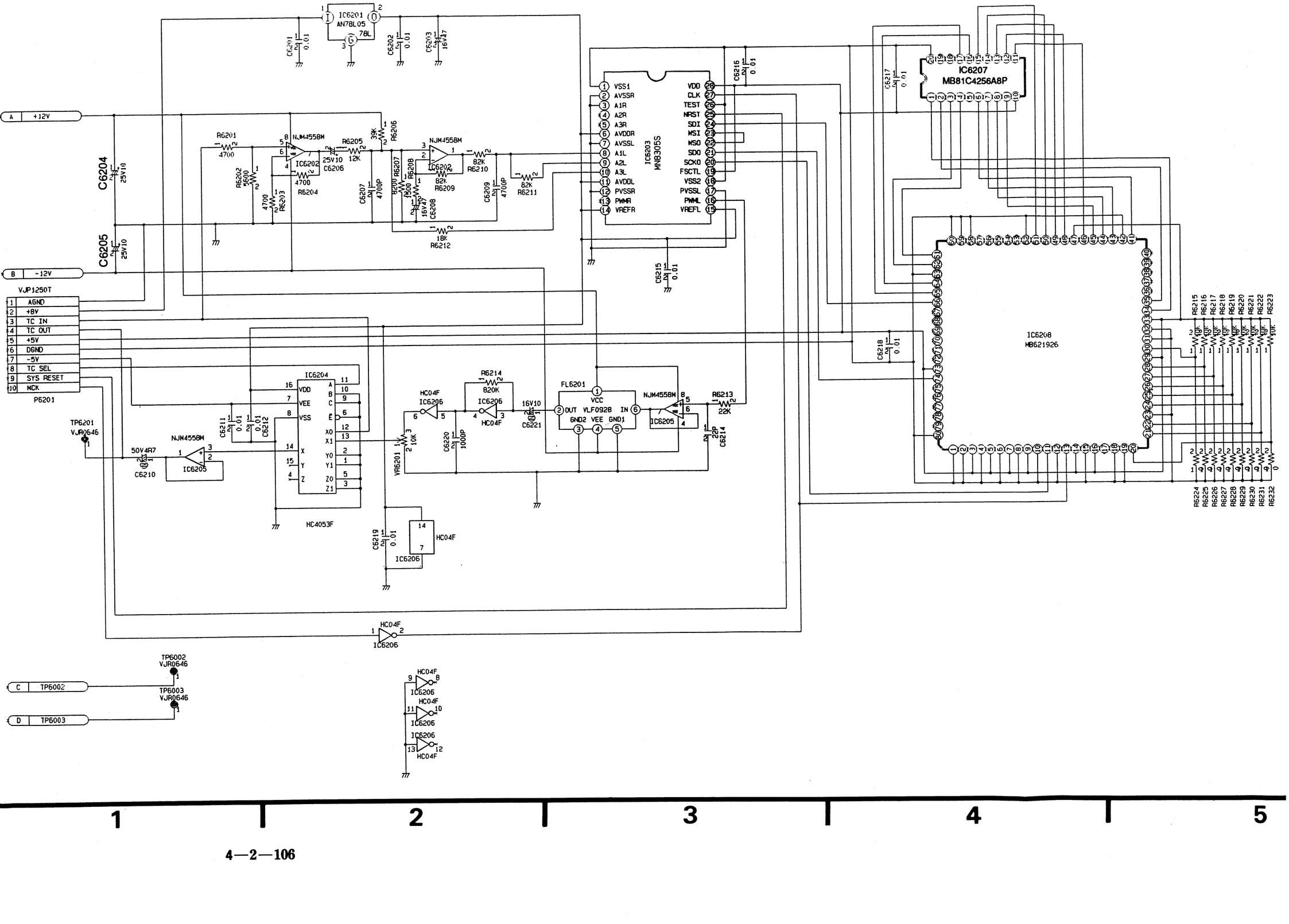

COMPARISON CHART BETWEEN
NTSC MODEL AND PAL MODEL
S7 SYSTEM CONTROL P.C.B.

REF. NO.	NTSC	PAL
IC6002	VSI1092U VEP86092E	VSI1093S VEP86092F

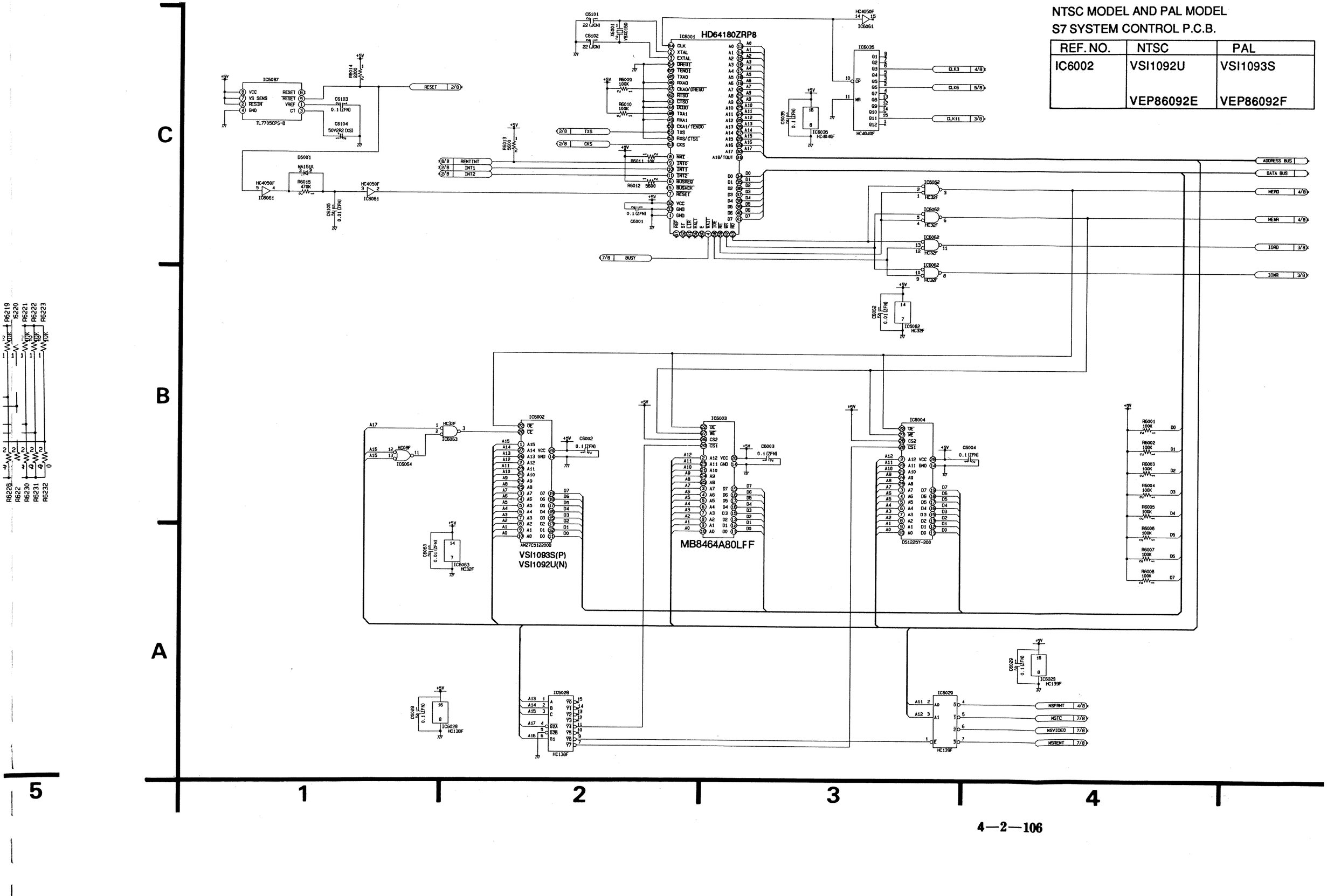

S7 SYSTEM CONTROL SCHEMATIC DIAGRAM (2/8)

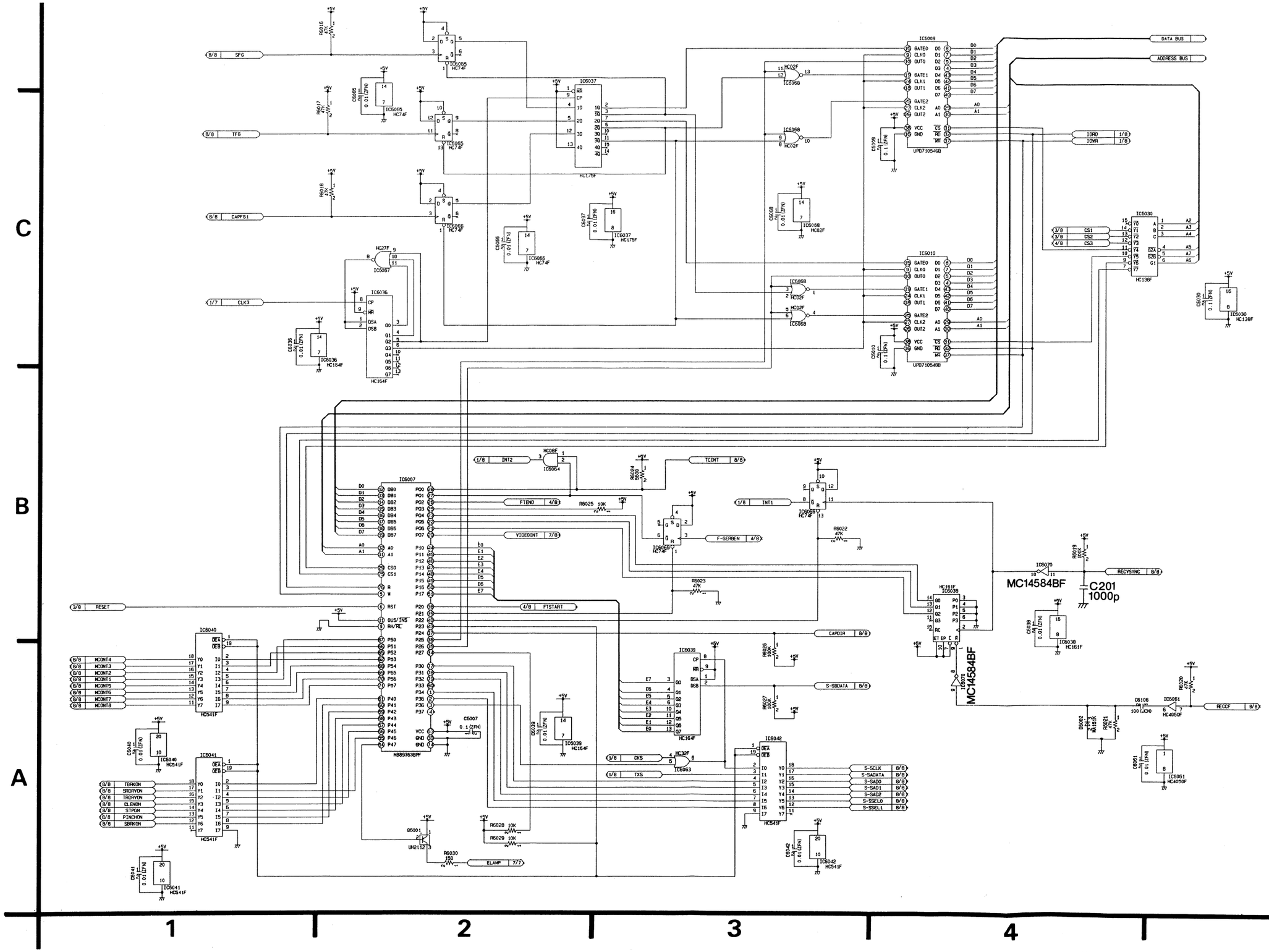

4—2—107

S7 SYSTEM CONTROL SCHEMATIC DIAGRAM (3/8)

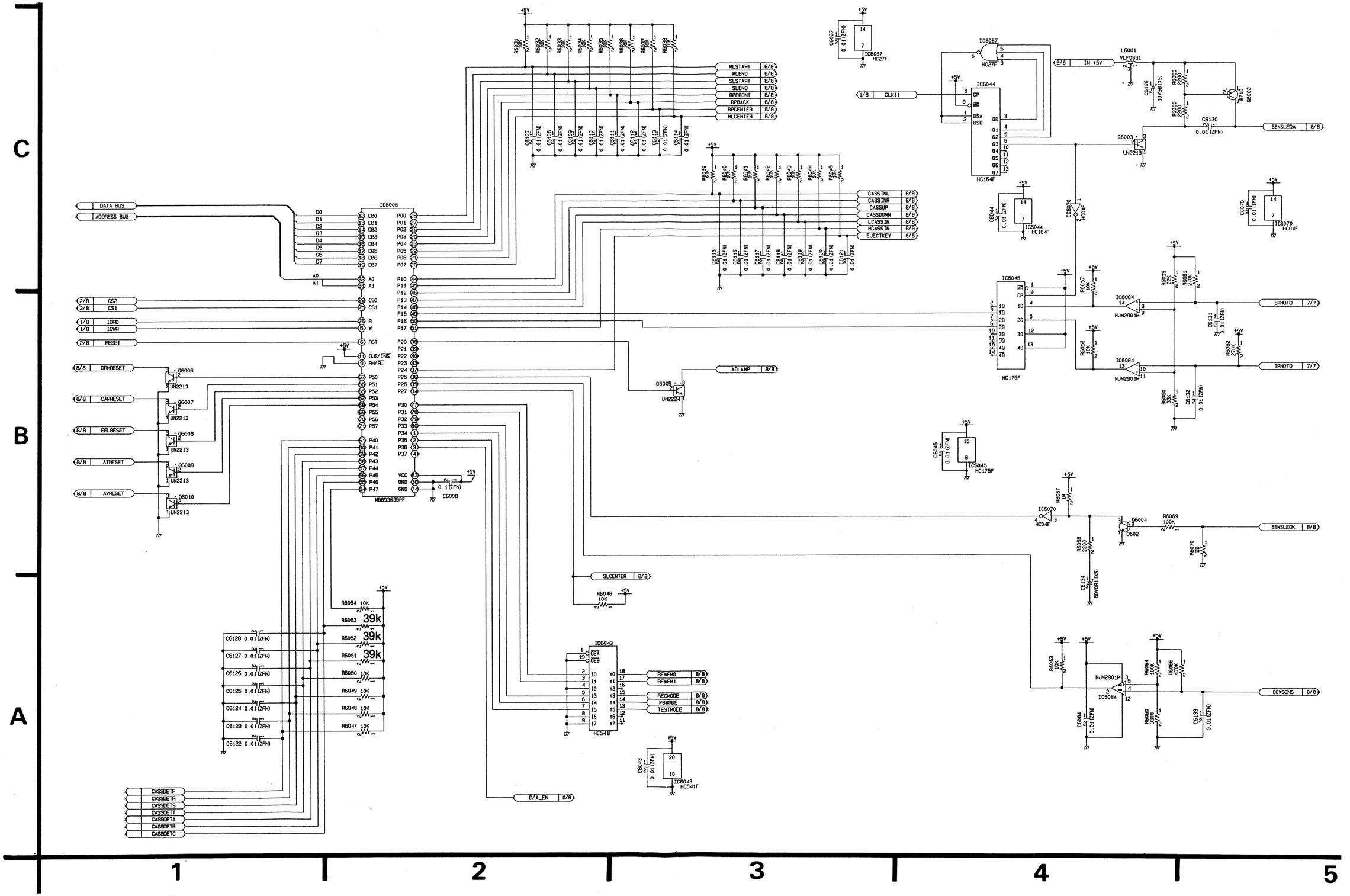

4—2—108

S7 SYSTEM CONTROL SCHEMATIC DIAGRAM (4/8)

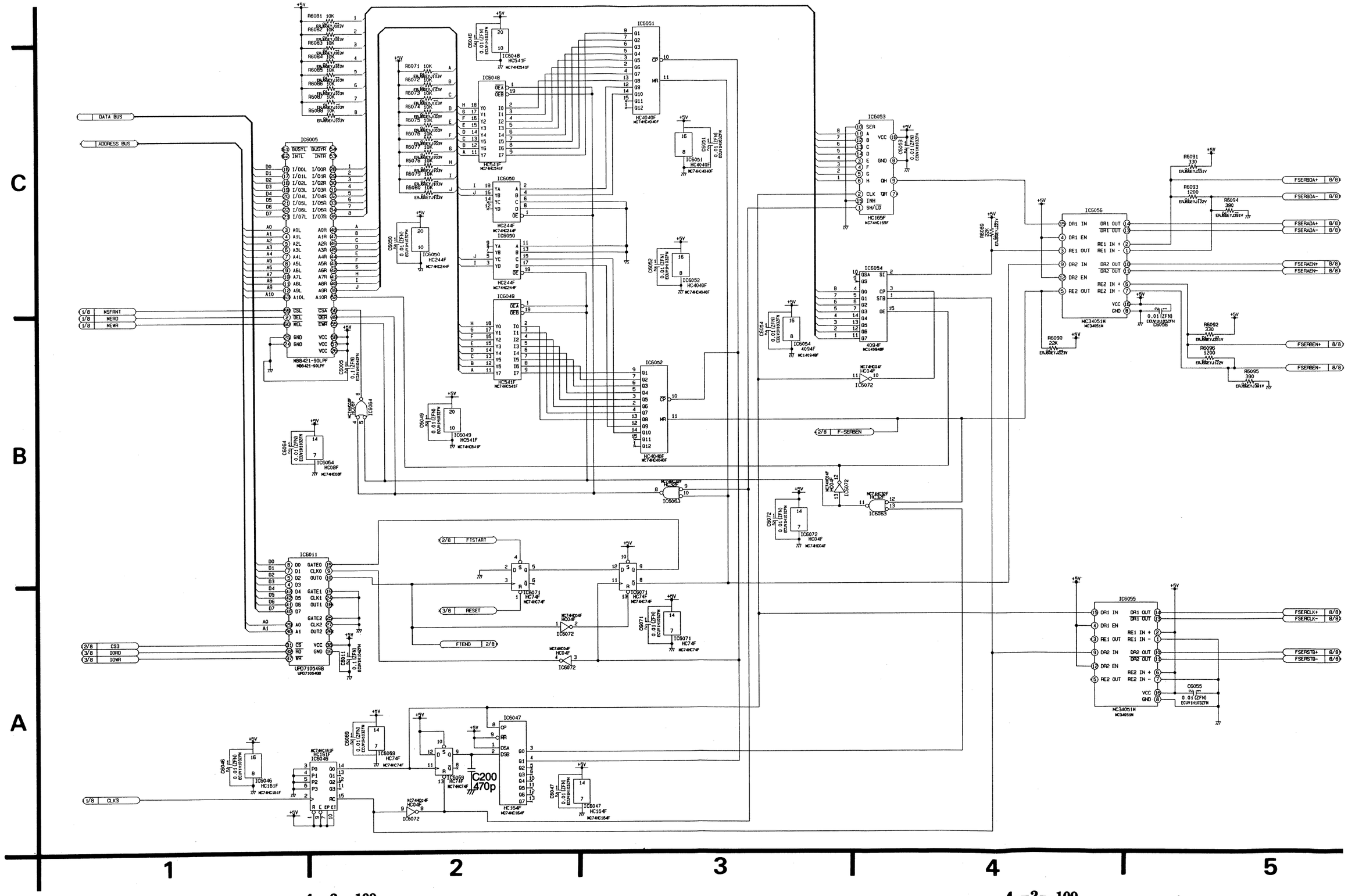

4—2—109

S7 SYSTEM CONTROL SCHEMATIC DIAGRAM (5/8)

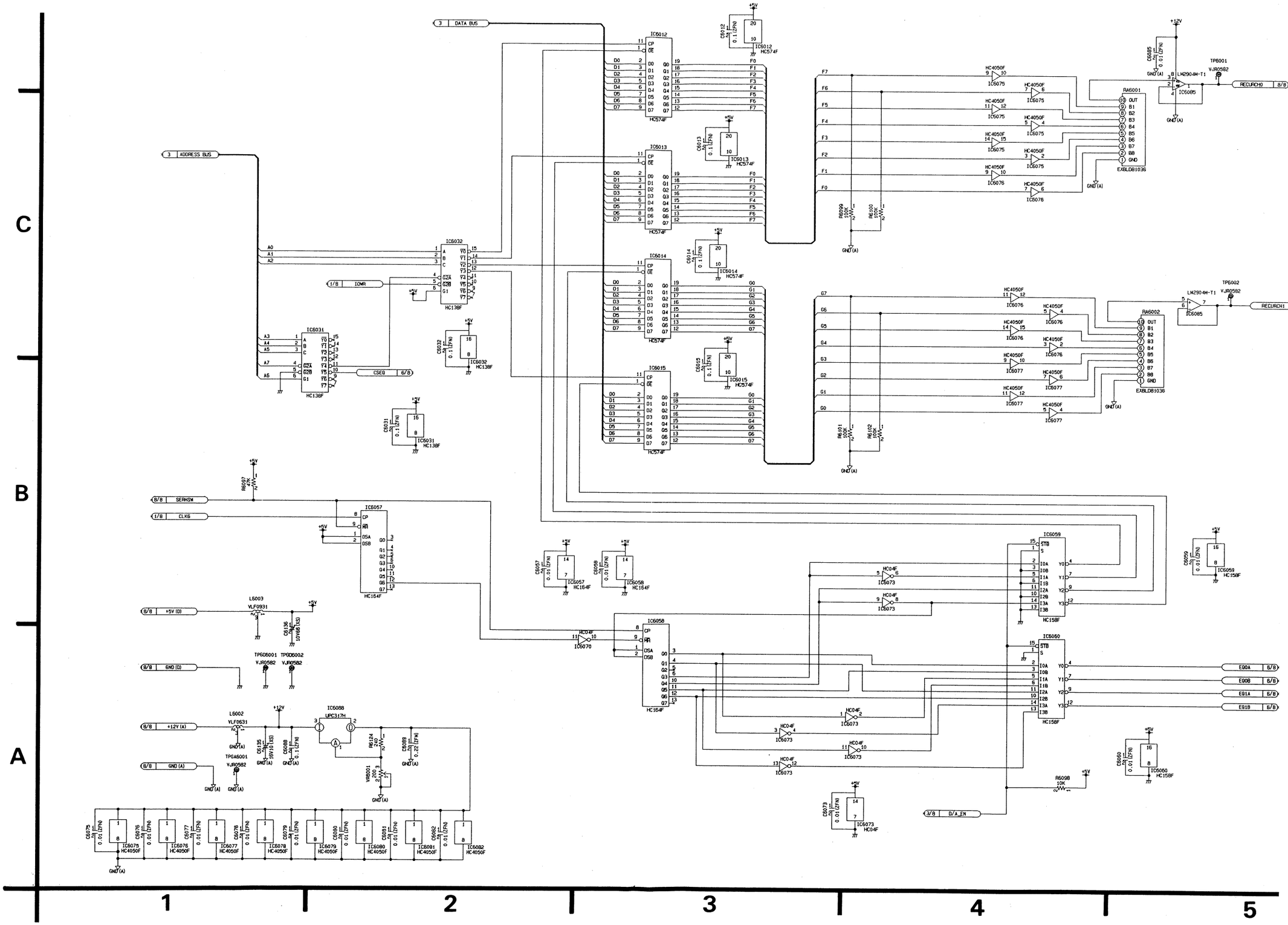

S7 SYSTEM CONTROL SCHEMATIC DIAGRAM (6/8)

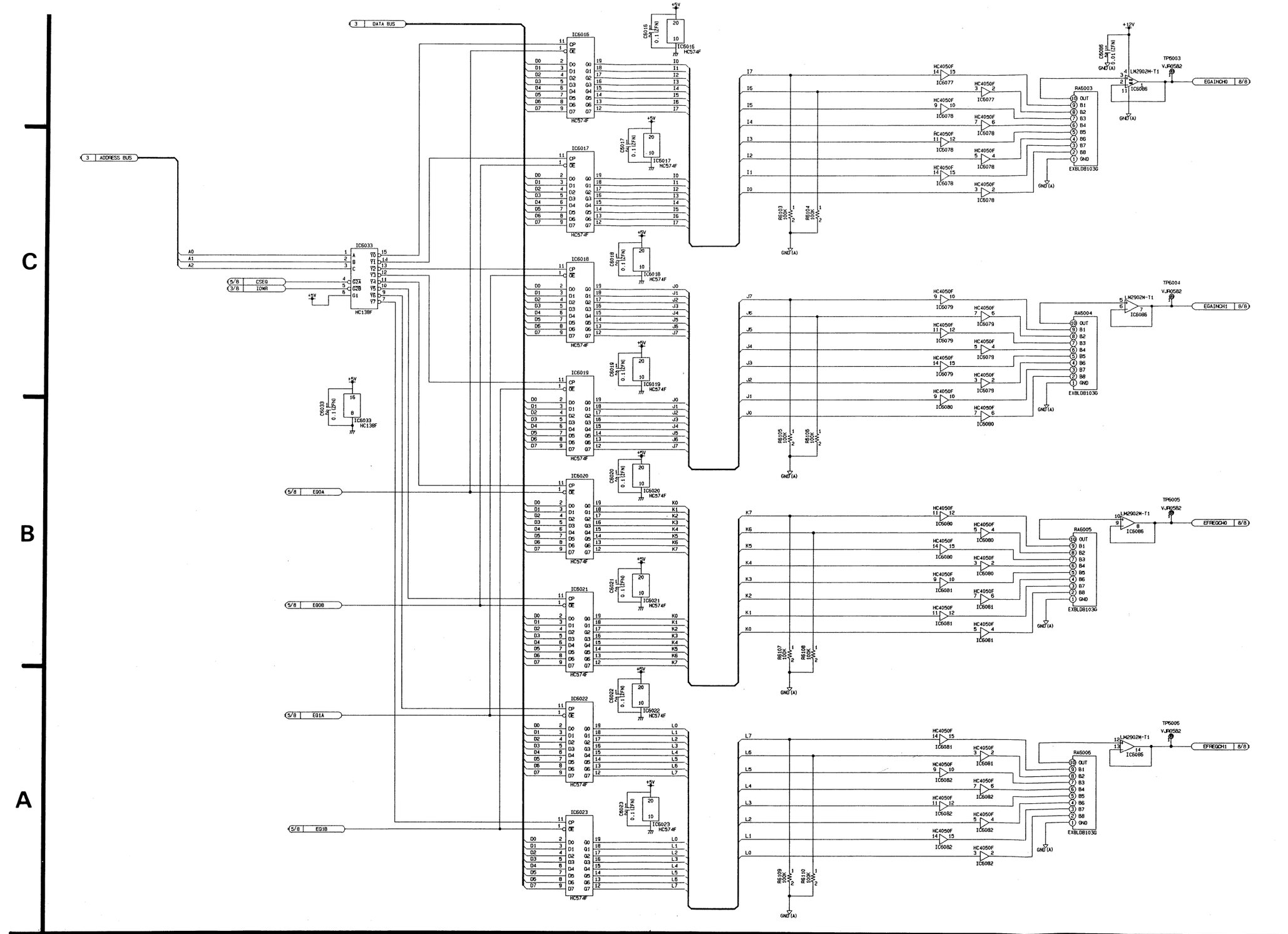

4—2—111

4—2—111

S7 SYSTEM CONTROL SCHEMATIC DIAGRAM (7/8)

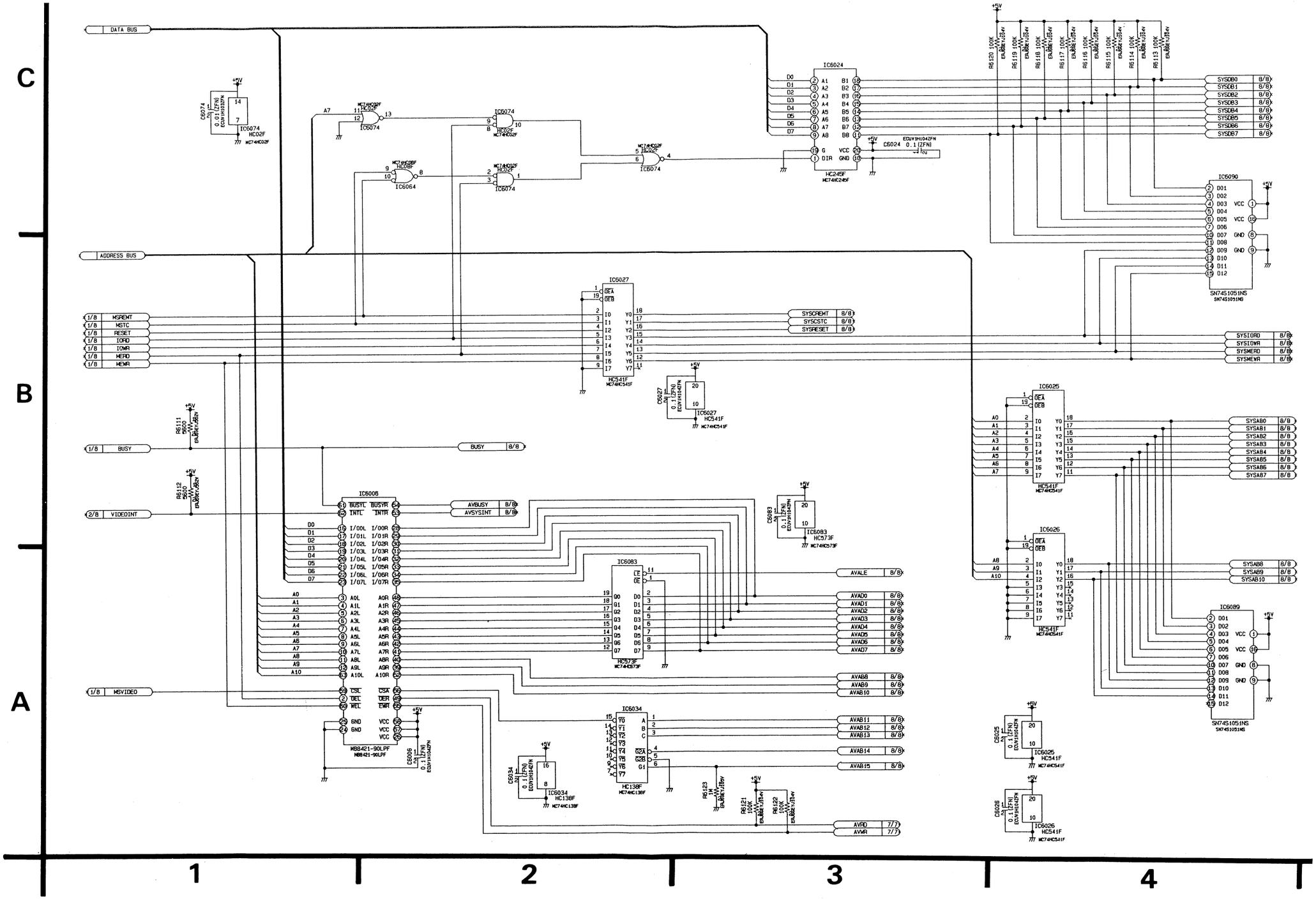

4—2—112

NTSC

S7 WAVEFORMS NTSC

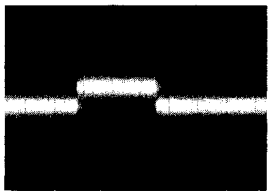

TP6001 E-E2
200mV/2msec. div.

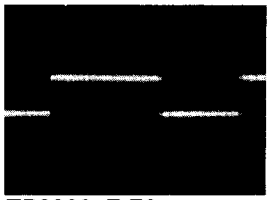

TP6002 E-E2
500mV/2msec. div.

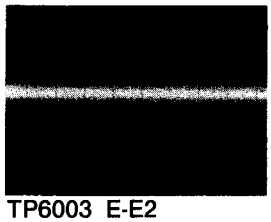

TP6003 E-E2
200mV/20μsec. div.

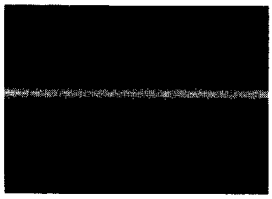

TP6004 E-E2
(TP6005, TP6006)
200mV/20μsec. div.

PAL

S7 WAVEFORMS PAL

TP6001 PLAY
200mV/2msec. div.

TP6002 PLAY
200mV/2msec. div.

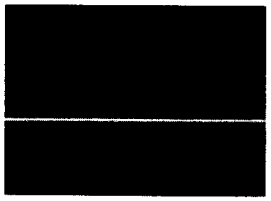

TP6003 PLAY
(TP6004, TP6005, TP6006)
200mV/20μsec. div.

S7 SYSTEM CONTROL SCHEMATIC DIAGRAM (8/8) [S MOTHER (P213, P214) SCHEMATIC DIAGRAM (7/14) FOR S7]

C

P213	A	S 7 FROM / TO				
1	GND (D)					GND (D)
2	AV AD 0	P245-30B	P215-2A	P217-2A	P211-2A	AVAD0
3	AV AD 3	P245-27B	P215-3A	P217-3A	P211-3A	AVAD3
4	AV AD 6	P245-24B	P215-4A	P217-4A	P211-4A	AVAD6
5	AV AB 8	P245-21B	P215-5A	P217-5A	P211-5A	AVAB8
6	AV AB 11	P245-18B	P215-6A	P217-6A	P211-6A	AVAB11
7	AV AB 14	P245-15B	P215-7A	P217-7A	P211-7A	AVAB14
8	AV RD	P245-12B	P215-8A	P217-8A	P211-8A	AVRD
9	SYS DB 0	P261-1	P211-9A	P241-4B		SYSDB0
10	SYS DB 1	P261-2	P211-10A	P241-5B		SYSDB1
11	SYS DB 2	P261-3	P211-11A	P241-6B		SYSDB2
12	SYS DB 3	P261-4	P211-12A	P241-7B		SYSDB3
13	SYS DB 4	P261-5	P211-13A	P241-8B		SYSDB4
14	SYS DB 5	P261-6	P211-14A	P241-9B		SYSDB5
15	SYS DB 6	P261-7	P211-15A	P241-10B		SYSDB6
16	SYS DB 7	P261-8	P211-16A	P241-11B		SYSDB7
17	TC INT	P211-17A				TCINT
18	REC V SYNC	P212-16C	P251-6B			RECVSYNC
19	REC CF	P212-15A	P251-10B			RECCF
20	MRST	P208-22C				ATRESET
21	DRUM RST	P209-21A				DAMRESET
22	MCONT 5	P233-9B				MCONT5
23	PINCH ON	P233-10B	P209-8C			PINCHON
24	MCONT 1	P233-13B				MCONT1
25	MCONT 2	P263-13A				MCONT2
26	T REEL DRV ON	P233-15B				TRDRVON
27						
28	-5V (D)					-5V (D)
29	+5V (D)					+5V (D)
30	+5V (D)					+5V (D)
31	GND (D)					GND (D)
32	GND (D)					GND (D)

P213	B	S 7 FROM / TO				
1	GND (D)					GND (D)
2	AV AD 1	P245-29B	P215-2B	P217-2B	P211-2B	AVAD1
3	AV AD 4	P245-26B	P215-3B	P217-3B	P211-3B	AVAD4
4	AV AD 7	P245-23B	P215-4B	P217-4B	P211-4B	AVAD7
5	AV AB 9	P245-20B	P215-5B	P217-5B	P211-5B	AVAB9
6	AV AB 12	P245-17B	P215-6B	P217-6B	P211-6B	AVAB12
7	AV AB 15	P245-14B	P215-7B	P217-7B	P211-7B	AVAB15
8	AV WR	P245-11B	P215-8B	P217-8B	P211-8B	AVWR
9	SYS AB 0	P260-1	P211-9B	P241-4A		SYSAB0
10	SYS AB 1	P260-2	P211-10B	P241-5A		SYSAB1
11	SYS AB 2	P260-3	P211-11B	P241-6A		SYSAB2
12	SYS AB 3	P260-4	P211-12B	P241-7A		SYSAB3
13	SYS AB 4	P260-5	P211-13B	P241-8A		SYSAB4
14	SYS AB 5	P260-6	P211-14B	P241-9A		SYSAB5
15	SYS AB 6	P260-7	P211-15B	P241-10A		SYSAB6
16	SYS AB 7	P260-8	P211-16B	P241-11A		SYSAB7
17	SYS AB 8		P211-17B			SYSAB8
18	SYS AB 9		P211-18B			SYSAB9
19	SYS AB10		P211-19B			SYSAB10
20	VCP RESET	P251-5B				AVRESET
21	CAP RST	P209-21B				CAPRESET
22	MCONT 6	P233-9A				MCONT6
23	S BRK ON	P233-11B				SBRKON
24	STP ON	P233-12B				STPON
25	MCONT 3	P233-14B				MCONT3
26	S REEL DRV ON	P233-15A				SRDRVON
27						
28	-5V (D)					-5V (D)
29	+5V (D)					+5V (D)
30	+5V (D)					+5V (D)
31	GND (D)					GND (D)
32	GND (D)					GND (D)

P213	C
1	GND (D)
2	AV AD 2
3	AV AD 5
4	AV ALE
5	AV AB 10
6	AV AB 13
7	AV SYS INT
8	AV BUSY
9	SYS RESET
10	SYS IORD
11	SYS IOWR
12	SYS MERD
13	SYS MEWR
14	SYS BUSY
15	SYS CS TC
16	SYS CS REMT
17	REMT INT
18	SYS CS VIDEO
19	
20	
21	REEL RST
22	MCONT 7
23	T BRK ON
24	CLEAN ON
25	MOCNT 4
26	MCONT 8
27	
28	-5V (D)
29	+5V (D)
30	+5V (D)
31	GND (D)
32	GND (D)

B

A

P214	A	S 7 FROM / TO				
1						
2	F-SER A DATA +	P246-1				FSERADA+
3	F-SER A DATA -	P246-2				FSERADA-
4	F-SER A EN +	P246-3				FSERAEN+
5	F-SER A EN -	P246-4				FSERAEN-
6	S-SER A DATA	P210-6A				S-SADATA
7	S-SER B DATA	P210-7A				S-SBDATA
8	S-SER CLK	P210-8A				S-SCLK
9	S-FG	P210-9A				SFG
10	CASS DET A	P242-2B				CASSDETA
11	S PHOTO	P242-7B				SPHOTO
12	T PHOTO	P242-8B				TPHOTO
13	SUB LOAD START	P242-9B				SLSTART
14	SUB LOAD END	P242-10B				SLEND
15	CASS DET F	P242-11B				CASSDETF
16	CASS DET R	P242-12B				CASSDETR
17	CASS DET S	P242-13B				CASSDETS
18	CASS DET T	P242-14B				CASSDETT
19	SER H SW	P210-18A	P256-1	P201-23B		SERHSW
20	REC MODE	P256-4	P202-22A			RECMODE
21	PB MODE	P202-21A	P204-21A			PBMODE
22	REC CURR CH0	P240-1	P202-22B			RECURCH0
23	REC CURR CH1	P240-2	P202-21B			RECURCH1
24						
25	-5V (A)					-5V (A)
26	+5V (A)					+5V (A)
27	-12V (A)					-12V (A)
28	+12V (A)					+12V (A)
29	+15V (un)					+15V (UN)
30	+8V (un)					+8V (UN)
31	GND (A)					GND (A)
32	GND (A)					GND (A)

P214	B	S 7 FROM / TO				
1						
2	F-SER B DATA +	P246-5				FSERBDA+
3	F-SER B DATA -	P246-6				FSERBDA-
4	F-SER B EN +	P246-7				FSERBEN+
5	F-SER B EN -	P246-8				FSERBEN-
6	SER_ADR0	P210-6B	P208-6C			S-SAD0
7	SER_ADR1	P210-7B	P208-7C			S-SAD1
8	SER_ADR2	P210-8B	P208-8C			S-SAD2
9	T-FG	P210-9B				TFG
10	CASS DET B	P242-3B				CASSDETB
11	CASS IN SW L	P242-5B				CASSINL
12	CASS UP SW	P242-1A				CASSUP
13	L CASS IN	P242-3A				LCASSIN
14	MAIN LOAD START	P242-8A				MLSTART
15	MAIN LOAD END	P242-9A				MLEND
16	MAIN LOAD CENTER	P242-10A				MLCENTER
17	SENS LED A	P242-12A				SENSLEDA
18	SENS LED K	P242-13A				SENSLEDK
19	AUTO OFF LAMP	P247-4				AOLAMP
20	SUB LOAD CEN	P242-1B				SLCENTER
21	TEST MODE	P256-3	P202-24A			TESTMODE
22	EQ GAIN CH0	P202-23A	P204-24A			EGAINCH0
23	EQ GAIN CH1	P204-23A				EGAINCH1
24						
25	-5V (A)					-5V (A)
26	+5V (A)					+5V (A)
27	-12V (A)					-12V (A)
28	+12V (A)					+12V (A)
29	+15V (un)					+15V (UN)
30	+8V (un)					+8V (UN)
31	GND (A)					GND (A)
32	GND (A)					GND (A)

P214	C
1	
2	F-SER STB +
3	F-SER STB -
4	F-SER CLK +
5	F-SER CLK -
6	S-SER SEL 0
7	S-SER SEL 1
8	CAP DIR
9	CAP FGP
10	CASS DET C
11	CASS IN SW R
12	CASS DOWN SW
13	M CASS IN
14	REEL POS FRONT
15	REEL POS CENTER
16	REEL POS BACK
17	DEW SENS
18	EJECT KEY
19	EJECT LAMP
20	RF WFM SELECT 0
21	RF WFM SELECT 1
22	EQ FREQ CH 0
23	EQ FREQ CH 1
24	
25	-5V (A)
26	+5V (A)
27	-12V (A)
28	+12V (A)
29	+15V (un)
30	+8V (un)
31	GND (A)
32	GND (A)

1 2 3 4

GRAM (8/8) [S MOTHER (P213, P214) SCHEMATIC DIAGRAM (7/14) FOR S7]

P213		S 7			
	B	FROM / TO			
1	GND (D)				
2	AV AD 1	P245-29B	P215-2B	P217-2B	P211-2B
3	AV AD 4	P245-26B	P215-3B	P217-3B	P211-3B
4	AV AD 7	P245-23B	P215-4B	P217-4B	P211-4B
5	AV AB 9	P245-20B	P215-5B	P217-5B	P211-5B
6	AV AB 12	P245-17B	P215-6B	P217-6B	P211-6B
7	AV AB 15	P245-14B	P215-7B	P217-7B	P211-7B
8	AV WR	P245-11B	P215-8B	P217-8B	P211-8B
9	SYS AB 0	P260-1	P211-9B	P241-4A	
10	SYS AB 1	P260-2	P211-10B	P241-5A	
11	SYS AB 2	P260-3	P211-11B	P241-6A	
12	SYS AB 3	P260-4	P211-12B	P241-7A	
13	SYS AB 4	P260-5	P211-13B	P241-8A	
14	SYS AB 5	P260-6	P211-14B	P241-9A	
15	SYS AB 6	P260-7	P211-15B	P241-10A	
16	SYS AB 7	P260-8	P211-16B	P241-11A	
17	SYS AB 8		P211-17B		
18	SYS AB 9		P211-18B		
19	SYS AB10		P211-19B		
20	VCP RESET	P251-5B			
21	CAP RST	P209-21B			
22	MCONT 6	P233-9A			
23	S BRK ON	P233-11B			
24	STP ON	P233-12B			
25	MCONT 3	P233-14B			
26	S REEL DRV ON	P233-15A			
27					
28	-5V (D)				
29	+5V (D)				
30	+5V (D)				
31	GND (D)				
32	GND (D)				

GND (D) AVAD0 AVAD3 AVAD6 AVAB8 AVAB11 AVAB14 AVRD SYSDB0 SYSDB1 SYSDB2 SYSDB3 SYSDB4 SYSDB5 SYSDB6 SYSDB7 TCINT RECVSYNC RECCF ATRESET DRMRESET MCONT5 PINCHON MCONT1 MCONT2 TRDRVON

-5V (D) +5V (D) +5V (D) GND (D) GND (D)

GND (D) AVAD1 AVAD4 AVAD7 AVAB9 AVAB12 AVAB15 AVWR SYSAB0 SYSAB1 SYSAB2 SYSAB3 SYSAB4 SYSAB5 SYSAB6 SYSAB7 SYSAB8 SYSAB9 SYSAB10 AVRESET CAPRESET MCONT6 SBRKON STPON MCONT3 SRDRVON

-5V (D) +5V (D) +5V (D) GND (D) GND (D)

P213		S7			
	C	FROM / TO			
1	GND (D)				
2	AV AD 2	P211-2C	P245-28B	P215-2C	P217-2C
3	AV AD 5	P211-3C	P245-25B	P215-3C	P217-3C
4	AV ALE	P211-4C	P245-22B	P215-4C	P217-4C
5	AV AB 10	P211-5C	P245-19B	P215-5C	P217-5C
6	AV AB 13	P211-6C	P245-16B	P215-6C	P217-6C
7	AV SYS INT	P211-7C	P245-13B		
8	AV BUSY	P211-8C	P245-10B		
9	SYS RESET	P211-9C	P260-9	P241-12B	P233-10A
10	SYS IORD	P211-10C	P260-10	P241-12A	
11	SYS IOWR	P211-11C	P260-11	P241-13A	
12	SYS MERD	P211-12C			
13	SYS MEWR	P211-13C			
14	SYS BUSY	P211-14C			
15	SYS CS TC	P211-15C			
16	SYS CS REMT	P211-16C			
17	REMT INT	P211-17C			
18	SYS CS VIDEO	P211-18C			
19					
20					
21	REEL RST	P209-21C			
22	MCONT 7	P233-16B			
23	T BRK ON	P233-11A			
24	CLEAN ON	P233-12A			
25	MOCNT 4	P233-14A			
26	MCONT 8	P233-16A			
27					
28	-5V (D)				
29	+5V (D)				
30	+5V (D)				
31	GND (D)				
32	GND (D)				

GND (D) AVAD2 AVAD5 AVALE AVAB10 AVAB13 AVSYSINT AVBUSY SYSRESET SYSIORD SYSIOWR SYSMERD SYSMEWR BUSY SYSCSTC SYSCREMT REMTINT

RELRESET MCONT7 TBRKON CLENON MCONT4 MCONT8

-5V (D) +5V (D) +5V (D) GND (D) GND (D)

P214		S 7			
	B	FROM / TO			
1					
2	F-SER B DATA +	P246-5			
3	F-SER B DATA -	P246-6			
4	F-SER B EN +	P246-7			
5	F-SER B EN -	P246-8			
6	SER_ADR0	P210-6B	P208-6C		
7	SER_ADR1	P210-7B	P208-7C		
8	SER_ADR2	P210-8B	P208-8C		
9	T-FG	P210-9B			
10	CASS DET B	P242-3B			
11	CASS IN SW L	P242-5B			
12	CASS UP SW	P242-1A			
13	L CASS IN	P242-3A			
14	MAIN LOAD START	P242-8A			
15	MAIN LOAD END	P242-9A			
16	MAIN LOAD CENTER	P242-10A			
17	SENS LED A	P242-12A			
18	SENS LED K	P242-13A			
19	AUTO OFF LAMP	P247-4			
20	SUB LOAD CEN	P242-1B			
21	TEST MODE	P256-3	P202-24A		
22	EQ GAIN CH0	P202-23A	P204-24A		
23	EQ GAIN CH1	P204-23A			
24					
25	-5V (A)				
26	+5V (A)				
27	-12V (A)				
28	+12V (A)				
29	+15V (un)				
30	+8V (un)				
31	GND (A)				
32	GND (A)				

FSERADA+ FSERADA- FSERAEN+ FSERAEN- S-SADATA S-SBDATA S-SCLK SFG CASSDETA SPHOTO TPHOTO SLSTART SLEND CASSDETF CASSDETR CASSDETS CASSDETT SERHSW RECMODE PBMODE RECURCH0 RECURCH1

-5V (A) +5V (A) -12V (A) +12V (A) +15V (UN) +8V (UN) GND (A) GND (A)

FSERBDA+ FSERBDA- FSERBEN+ FSERBEN- S-SAD0 S-SAD1 S-SAD2 TFG CASSDETB CASSINL CASSUP LCASSIN MLSTART MLEND MLCENTER SENSLEDA SENSLEDK AOLAMP SLCENTER TESTMODE EGAINCH0 EGAINCH1

-5V (A) +5V (A) -12V (A) +12V (A) +15V (UN) +8V (UN) GND (A) GND (A)

P214		S7			
	C	FROM / TO			
1					
2	F-SER STB +	P246-9			
3	F-SER STB -	P246-10			
4	F-SER CLK +	P246-11			
5	F-SER CLK -	P246-12			
6	S-SER SEL 0	P210-6C			
7	S-SER SEL 1	P210-7C			
8	CAP DIR	P210-8C	P216-8C	P251-20B	
9	CAP FGP	P210-9C	P216-9C	P251-19B	
10	CASS DET C	P242-4B			
11	CASS IN SW R	P242-6B			
12	CASS DOWN SW	P242-2A			
13	M CASS IN	P242-4A			
14	REEL POS FRONT	P242-5A			
15	REEL POS CENTER	P242-6A			
16	REEL POS BACK	P242-7A			
17	DEW SENS	P242-11A			
18	EJECT KEY	P247-1			
19	EJECT LAMP	P247-2			
20	RF WFM SELECT 0	P202-21C	P204-21C		
21	RF WFM SELECT 1	P202-22C	P204-22C		
22	EQ FREQ CH 0	P202-23C	P204-24C		
23	EQ FREQ CH 1	P204-23C			
24					
25	-5V (A)				
26	+5V (A)				
27	-12V (A)				
28	+12V (A)				
29	+15V (un)				
30	+8V (un)				
31	GND (A)				
32	GND (A)				

FSERSTB+ FSERSTB- FSERCLK+ FSERCLK- S-SSEL0 S-SSEL1 CAPDIR CAPFG1 CASSDETC CASSINR CASSDOWN MCASSIN RPFRONT RPCENTER RPBACK DEWSENS EJECTKEY ELAMP RFWFM0 RFWFM1 EFREQCH0 EFREQCH1

-5V (A) +5V (A) -12V (A) +12V (A) +15V (UN) +8V (UN) GND (A) GND (A)

2 3 4 5 6

NTSC

S8 WAVEFORMS NTSC

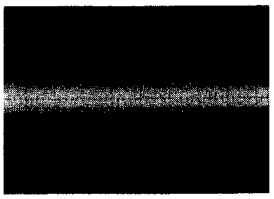

TP4101 E-E2
(TP4401, TP4402)
200mV/100μsec. div.

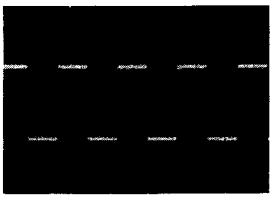

TP4451 E-E2
2V/10μsec. div.

TP4453 E-E2
2V/1μsec. div.

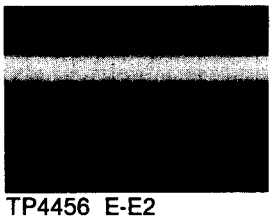

TP4456 E-E2
2V/20μsec. div.

PAL

S8 WAVEFORMS PAL

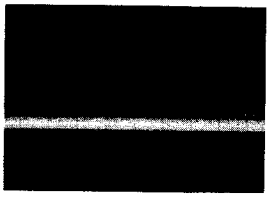

TP4101 E-E2
(TP4401, TP4402, TP4451)
200mV/100μsec. div.

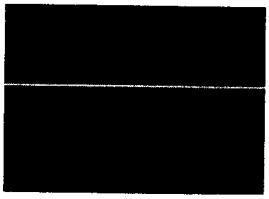

TP4456 E-E2
2V/50μsec. div.

S8 AUDIO PROCESS (CONNECT 1) SCHEMATIC DIAGRAM (1/13) [S MOTHER (P215, P216) SCHEMATIC DIAGRAM (8/14) FOR S

P215 A		S 8 FROM / TO			
1	GND (D)				
2	AV AD 0	P213-2A	P217-2A	P245-30B	P211-2A
3	AV AD 3	P213-3A	P217-3A	P245-27B	P211-3A
4	AV AD 6	P213-4A	P217-4A	P245-24B	P211-4A
5	AV AB 8	P213-5A	P217-5A	P245-21B	P211-5A
6	AV AB 11	P213-6A	P217-6A	P245-18B	P211-6A
7	AV AB 14	P213-7A	P217-7A	P245-15B	P211-7A
8	AV RD	P213-8A	P217-8A	P245-12B	P211-8A
9	AV RESET	P217-9A	P245-11B	P245-9B	
10					
11					
12	ASD 1	P245-30A			
13					
14	DSD 1	P245-28A			
15					
16	PBD 1 2	P245-25A			
17	STD	P245-23A			
18					
19					
20	MUTE 1 2	P245-21A			
21					
22	VALIDF	P245-19A			
23					
24	AU DATA IN 0	P245-16A			
25	AU DATA IN 3	P245-13A			
26	AU DATA IN 6	P245-10A			
27					
28	-5V (D)				
29	+5V (D)				
30	+5V (D)				
31	GND (D)				
32	GND (D)				

CONNECTER P215

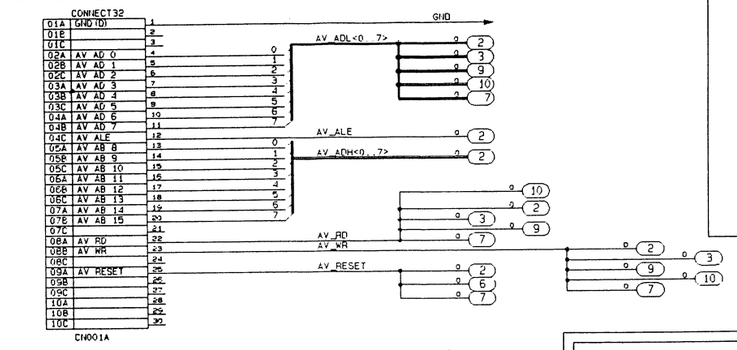

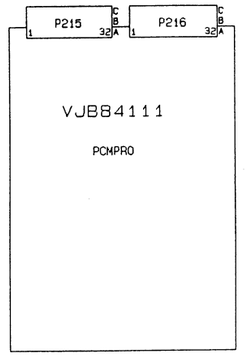

P216 A		S 8 FROM / TO			
1					
2	PB RST (INIT)	P251-30B			
3					
4	DBCK	P268-4			
5	BCK	P251-28B			
6	ST 0	P251-26B			
7	ST 3	P251-23B			
8	FSA	P251-21B			
9					
10					
11					
12					
13					
14					
15					
16	CUE D GND	P206-16A			
17					
18	DAI 1A	P269-1			
19	DAI 2A	P269-4			
20	DAO 1A	P269-7			
21	DAO 2A	P269-10			
22	VA CNT 1A	P270-1			
23	VA CNT 2A	P270-4			
24					
25	-5V (A)				
26	+5V (A)				
27	-12V (A)				
28	+12V (A)				
29	+15V (un)				
30	+8V (un)				
31	GND (A)				
32	GND (A)				

CONNECTER P216

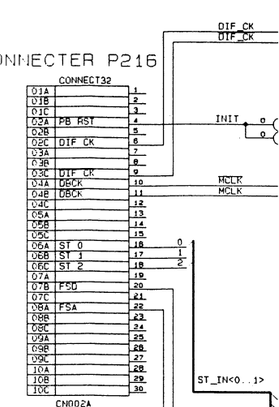

P215 B		S 8 FROM / TO			
1	GND (D)				
2	AV AD 1	P213-2B	P217-2B	P245-29B	P211-2B
3	AV AD 4	P213-3B	P217-3B	P245-26B	P211-3B
4	AV AD 7	P213-4B	P217-4B	P245-23B	P211-4B
5	AV AB 9	P213-5B	P217-5B	P245-20B	P211-5B
6	AV AB 12	P213-6B	P217-6B	P245-17B	P211-6B
7	AV AB 15	P213-7B	P217-7B	P245-14B	P211-7B
8	AV WR	P213-8B	P217-8B	P245-11B	P211-8B
9					
10					
11					
12					
13					
14					
15	DSD L	P245-26A			
16	PBD 3 4	P245-24A			
17	STFLG	P245-22A			
18					
19					
20	MUTE 3 4	P245-20A			
21					
22	PB5F	P245-18A			
23					
24	AU DATA IN 1	P245-15A			
25	AU DATA IN 4	P245-12A			
26	AU DATA IN 7	P245-9A			
27					
28	-5V (D)				
29	+5V (D)				
30	+5V (D)				
31	GND (D)				
32	GND (D)				

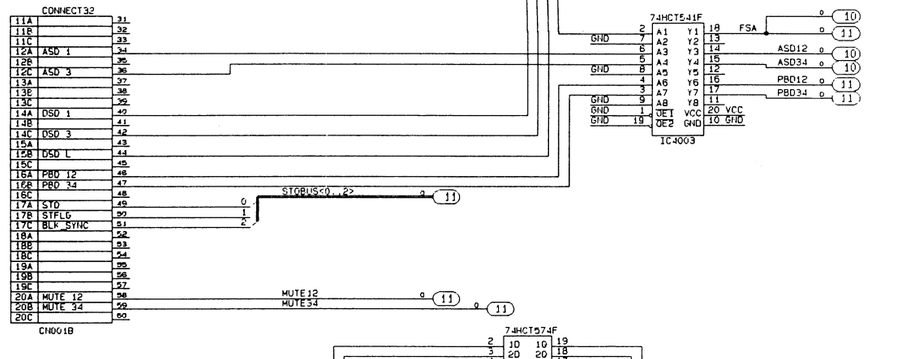

P216 B		S 8 FROM / TO			
1					
2	FS 128	P251-29B			
3					
4	DBCK	P268-5			
5	WCK	P251-27B			
6	ST 1	P251-25B			
7	FSD	P251-22B			
8					
9					
10					
11	CUE METER GND	P206-7B			
12					
13					
14					
15					
16	CUE D C	P206-16B			
17					
18	DAI 1B	P269-2			
19	DAI 2B	P269-5			
20	DAO 1B	P269-8			
21	DAO 2B	P269-11			
22	VA CNT 1B	P270-2			
23	VA CNT 2B	P270-5			
24					
25	-5V (A)				
26	+5V (A)				
27	-12V (A)				
28	+12V (A)				
29	+15V (un)				
30	+8V (un)				
31	GND (A)				
32	GND (A)				

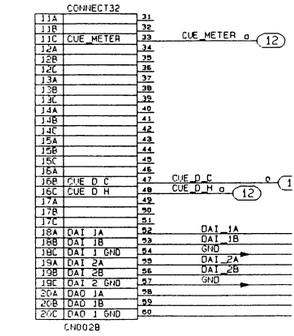

P215 C		S 8 FROM / TO			
1	GND (D)				
2	AV AD 2	P213-2C	P217-2C	P245-28B	P211-2C
3	AV AD 5	P213-3C	P217-3C	P245-25B	P211-3C
4	AV ALE	P213-4C	P217-4C	P245-22B	P211-4C
5	AV AB 10	P213-5C	P217-5C	P245-19B	P211-5C
6	AV AB 13	P213-6C	P217-6C	P245-16B	P211-6C
7					
8					
9					
10					
11					
12	ASD 3	P245-29A			
13					
14	DSD 3	P245-27A			
15					
16					
17	BLK_SYNC	P245-2A			
18					
19					
20					
21					
22	FILD	P245-17A			
23					
24	AU DATA IN 2	P245-14A			
25	AU DATA IN 5	P245-11A			
26					
27					
28	-5V (D)				
29	+5V (D)				
30	+5V (D)				
31	GND (D)				
32	GND (D)				

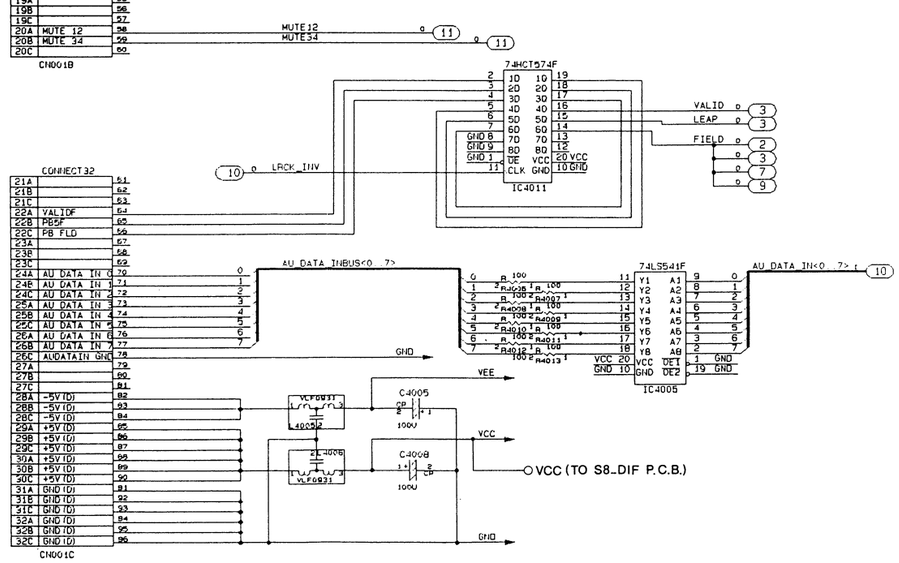

P216 C		S 8 FROM / TO			
1					
2	DIF CK	P268-1			
3	DIF CK	P268-2			
4					
5					
6	ST 2	P251-24B			
7					
8	CAP DIR	P210-8C	P214-8C	P251-20B	
9	CAP FGP	P210-9C	P214-9C	P251-19B	
10					
11	CUE METER	P206-7C			
12					
13					
14					
15					
16	CUE D H	P206-16C			
17					
18	DAI 1 GND	P269-3			
19	DAI 2 GND	P269-6			
20	DAO 1 GND	P269-9			
21	DAO 2 GND	P269-12			
22	VA CNT 1 GND	P270-3			
23	VA CNT 2 GND	P270-6			
24					
25	-5V (A)				
26	+5V (A)				
27	-12V (A)				
28	+12V (A)				
29	+15V (un)				
30	+8V (un)				
31	GND (A)				
32	GND (A)				

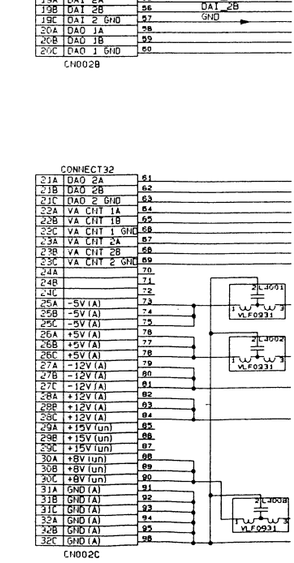

ΓIC DIAGRAM (1/13) [S MOTHER (P215, P216) SCHEMATIC DIAGRAM (8/14) FOR S8]

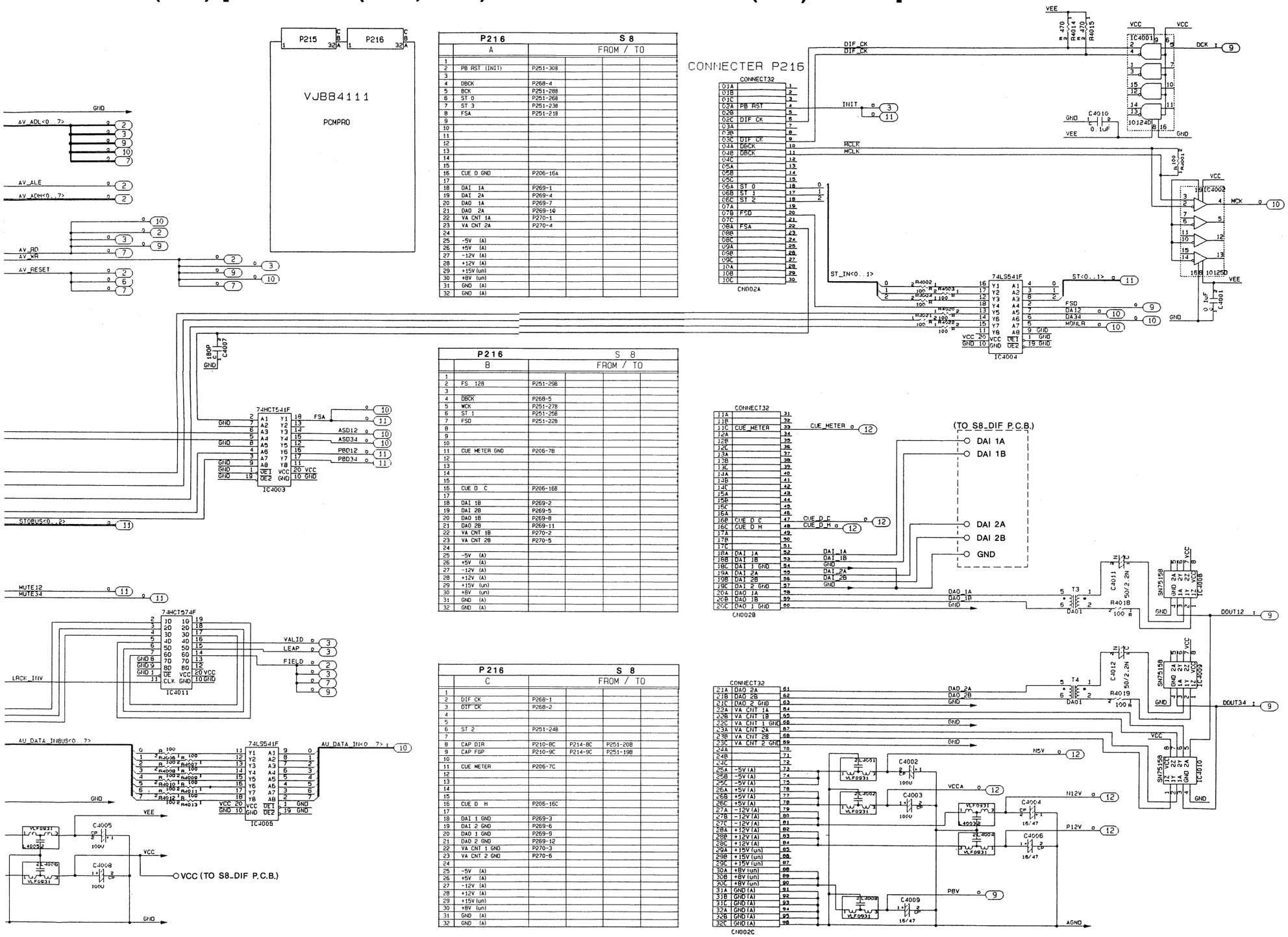

P216 A		S 8 FROM / TO			
1					
2	PB RST (INIT)	P251-30B			
3					
4	DBCK	P268-4			
5	BCK	P251-28B			
6	ST 0	P251-26B			
7	ST 3	P251-23B			
8	FSA	P251-21B			
9					
10					
11					
12					
13					
14					
15					
16	CUE D GND	P206-16A			
17					
18	DAI 1A	P269-1			
19	DAI 2A	P269-4			
20	DAO 1A	P269-7			
21	DAO 2A	P269-10			
22	VA CNT 1A	P270-1			
23	VA CNT 2A	P270-4			
24					
25	-5V (A)				
26	+5V (A)				
27	-12V (A)				
28	+12V (A)				
29	+15V (un)				
30	+8V (un)				
31	GND (A)				
32	GND (A)				

P216 B		S 8 FROM / TO			
1					
2	FS 128	P251-29B			
3					
4	DBCK	P268-5			
5	WCK	P251-27B			
6	ST 1	P251-25B			
7	FSD	P251-22B			
8					
9					
10					
11	CUE METER GND	P206-7B			
12					
13					
14					
15					
16	CUE D C	P206-16B			
17					
18	DAI 1B	P269-2			
19	DAI 2B	P269-5			
20	DAO 1B	P269-8			
21	DAO 2B	P269-11			
22	VA CNT 1B	P270-2			
23	VA CNT 2B	P270-5			
24					
25	-5V (A)				
26	+5V (A)				
27	-12V (A)				
28	+12V (A)				
29	+15V (un)				
30	+8V (un)				
31	GND (A)				
32	GND (A)				

P216 C		S 8 FROM / TO			
1					
2	DIF CK	P268-1			
3	DIF CK	P268-2			
4					
5					
6	ST 2	P251-24B			
7					
8	CAP DIR	P210-8C	P214-8C	P251-20B	
9	CAP FGP	P210-9C	P214-9C	P251-19B	
10					
11	CUE METER	P206-7C			
12					
13					
14					
15					
16	CUE D H	P206-16C			
17					
18	DAI 1 GND	P269-3			
19	DAI 2 GND	P269-6			
20	DAO 1 GND	P269-9			
21	DAO 2 GND	P269-12			
22	VA CNT 1 GND	P270-3			
23	VA CNT 2 GND	P270-6			
24					
25	-5V (A)				
26	+5V (A)				
27	-12V (A)				
28	+12V (A)				
29	+15V (un)				
30	+8V (un)				
31	GND (A)				
32	GND (A)				

3 4 5 6 7 8 9

S8 AUDIO PROCESS (CONNECT 2) SCHEMATIC DIAGRAM (2/13)

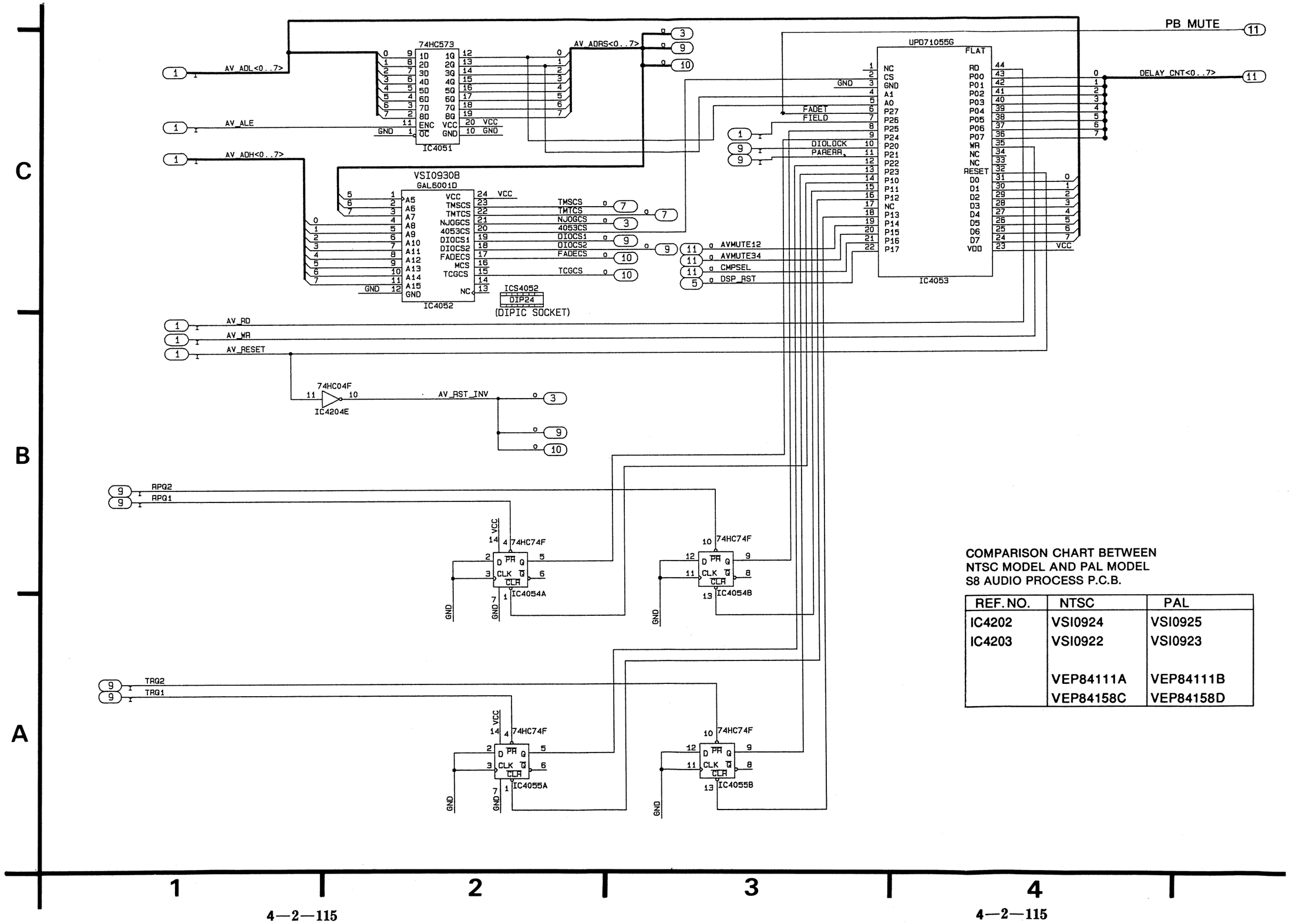

COMPARISON CHART BETWEEN NTSC MODEL AND PAL MODEL S8 AUDIO PROCESS P.C.B.

REF. NO.	NTSC	PAL
IC4202	VSI0924	VSI0925
IC4203	VSI0922	VSI0923
	VEP84111A	VEP84111B
	VEP84158C	VEP84158D

4—2—115

S8 AUDIO PROCESS (J GATE) SCHEMATIC DIAGRAM (3/13)

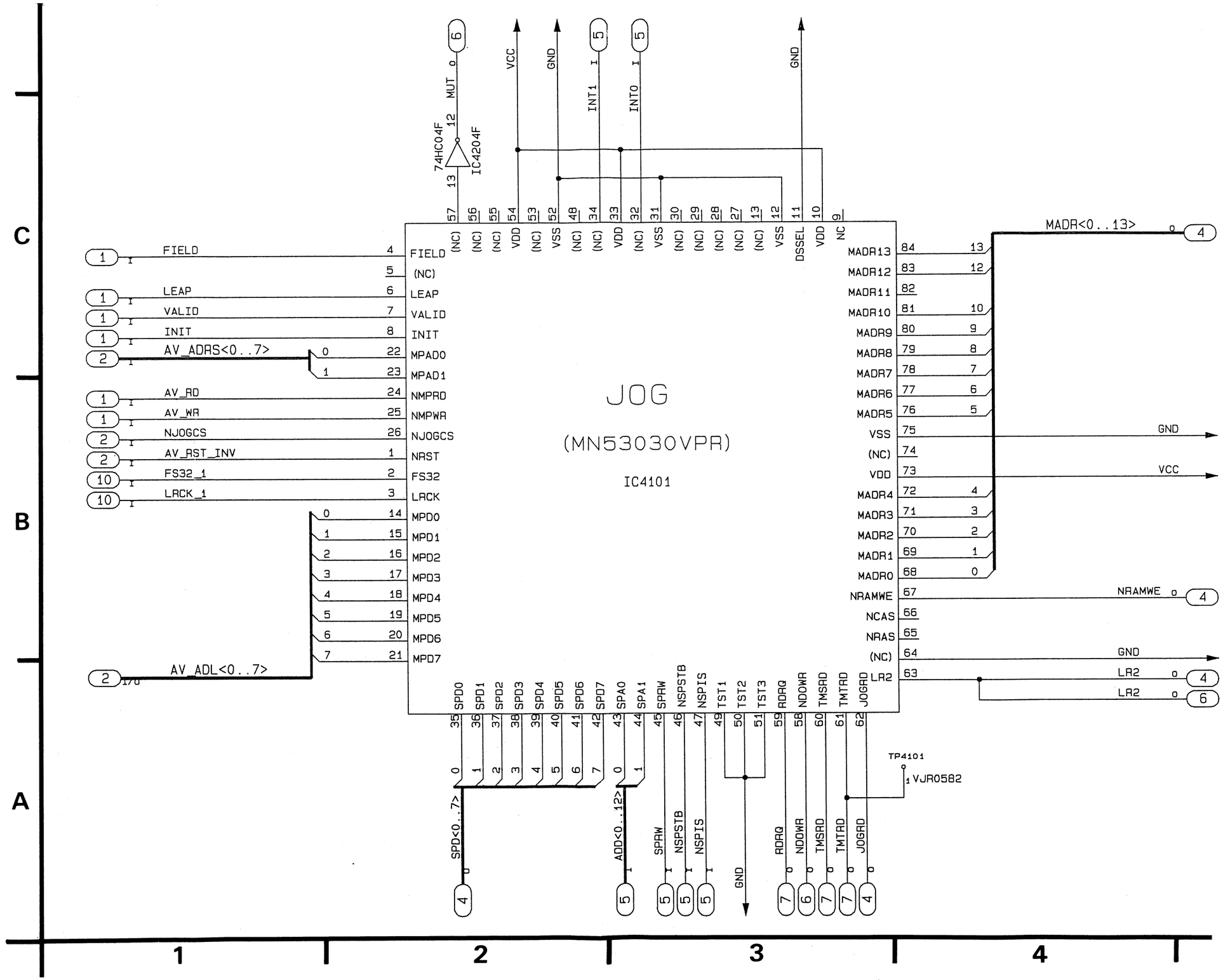

4—2—116

4—2—116

S8 AUDIO PROCESS (JOG/MEM) SCHEMATIC DIAGRAM (4/13)

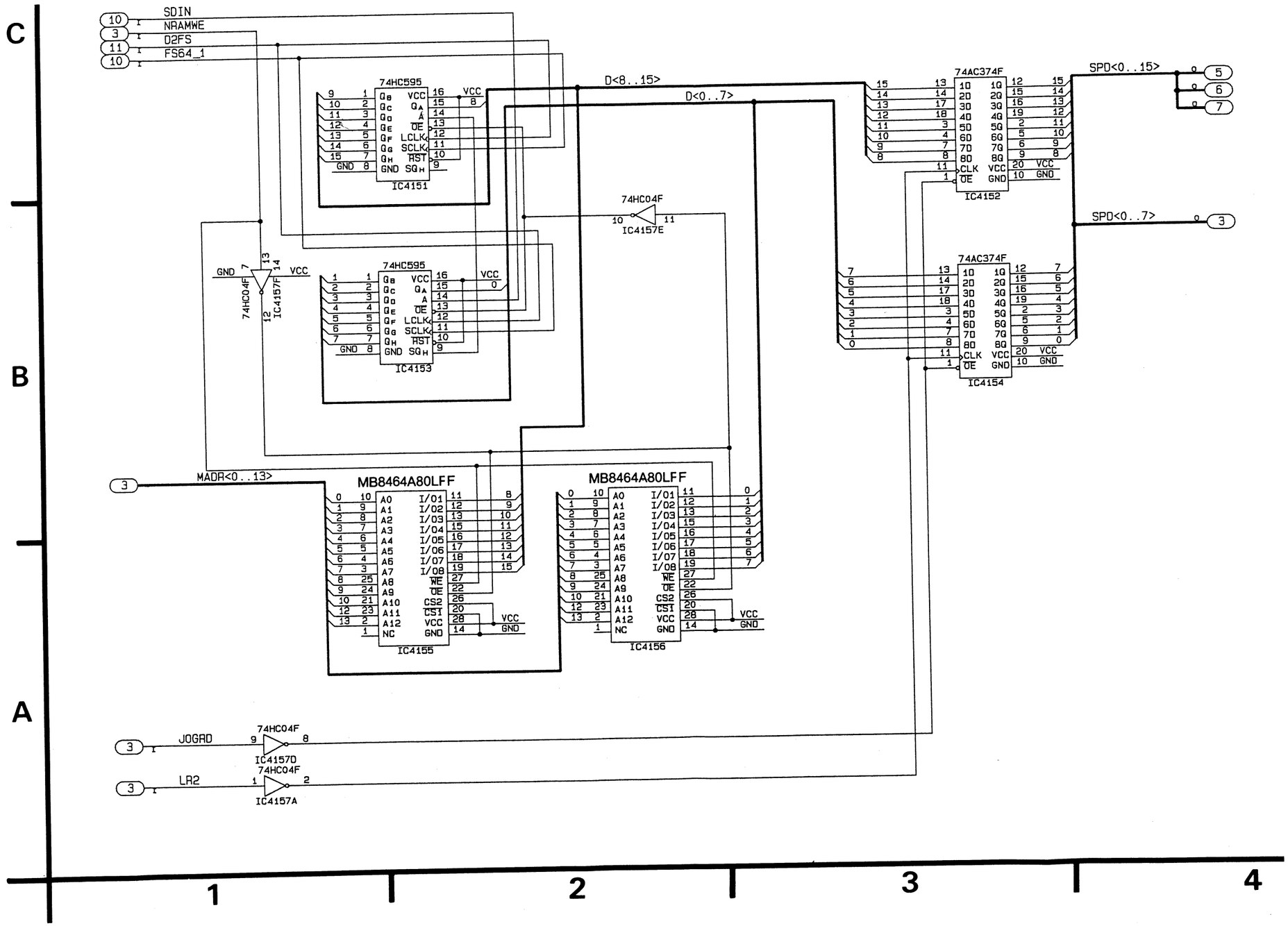

4—2—117

S8 AUDIO PROCESS (JOG/FLT) SCHEMATIC DIAGRAM (5/13)

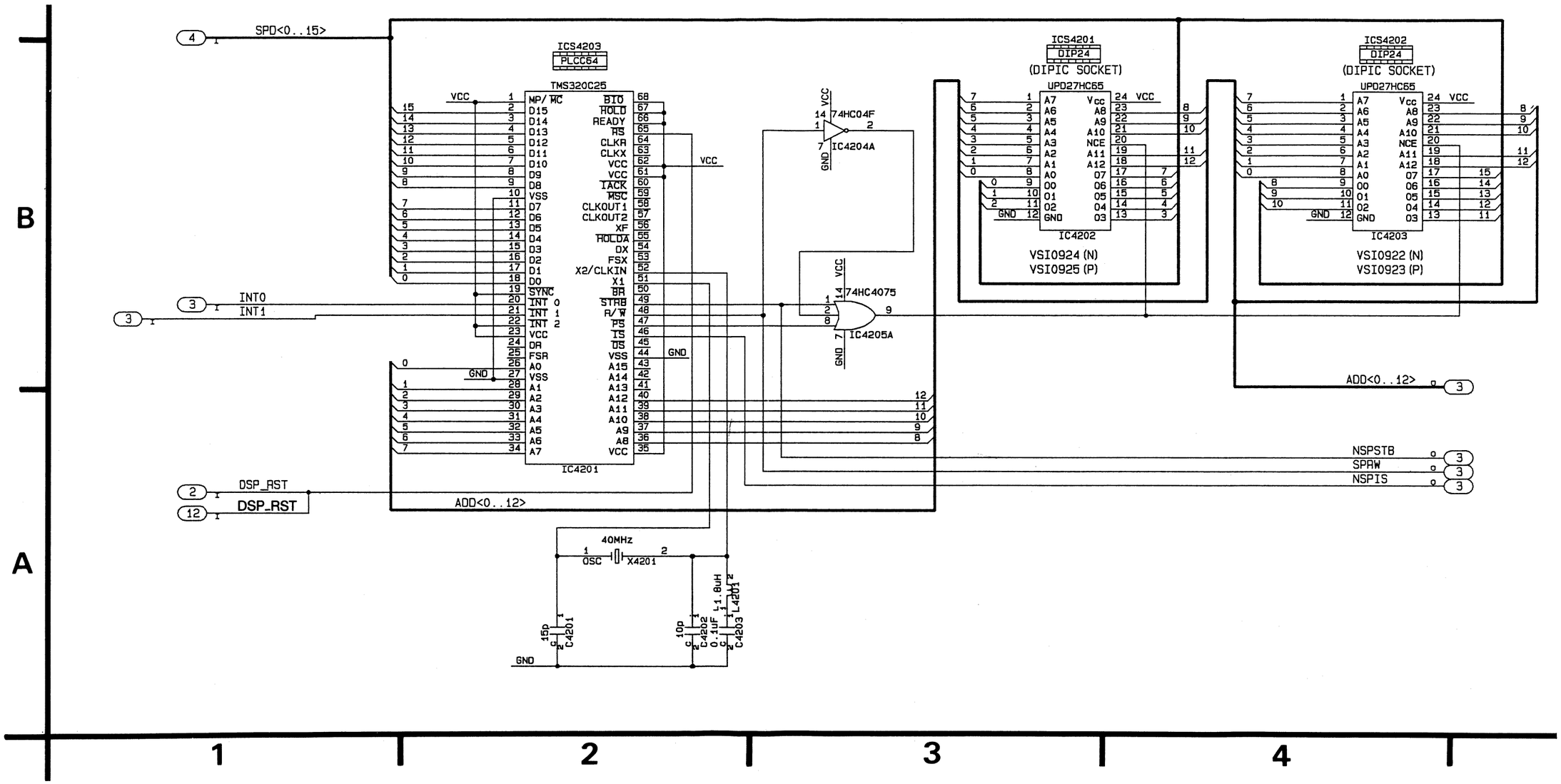

4—2—118

S8 AUDIO PROCESS (JOG/D OUT) SCHEMATIC DIAGRAM (6/13)

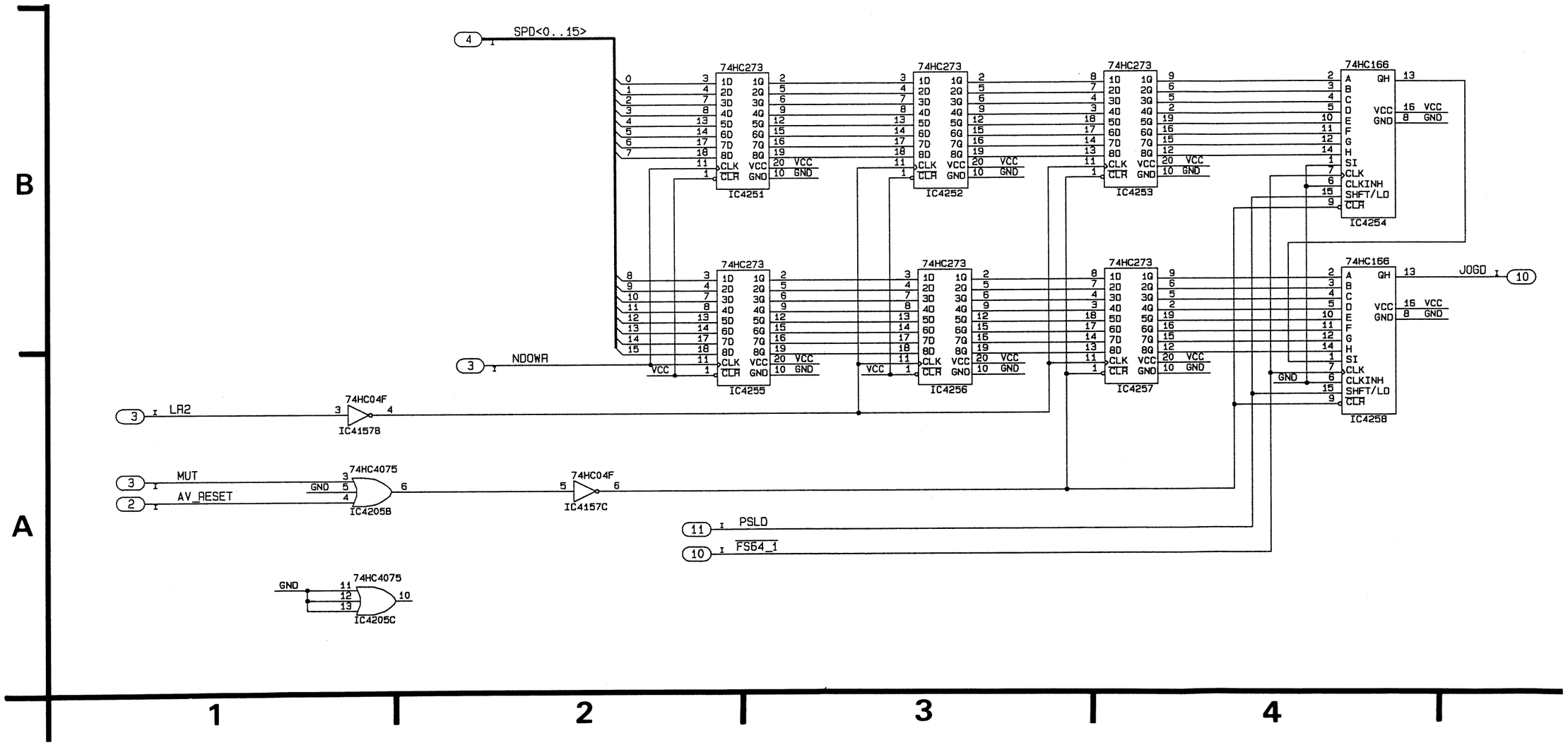

4—2—119

S8 AUDIO PROCESS (MAIN-SUB) SCHEMATIC DIAGRAM (7/13)

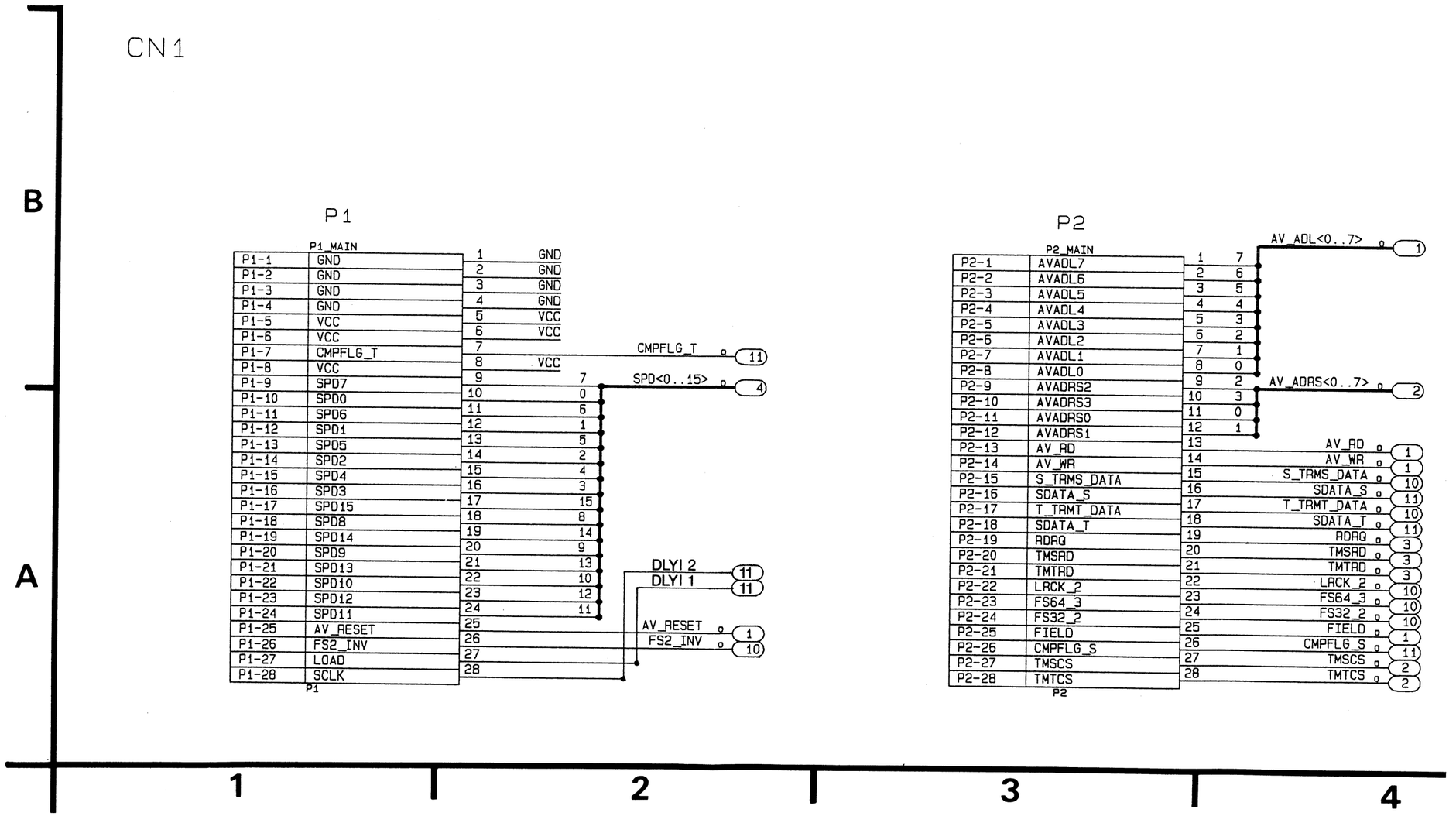

4—2—120

S8 AUDIO PROCESS (PRE DELAY) (AUDIO PROCESS SUB) SCHEMATIC DIAGRAM (8/13)

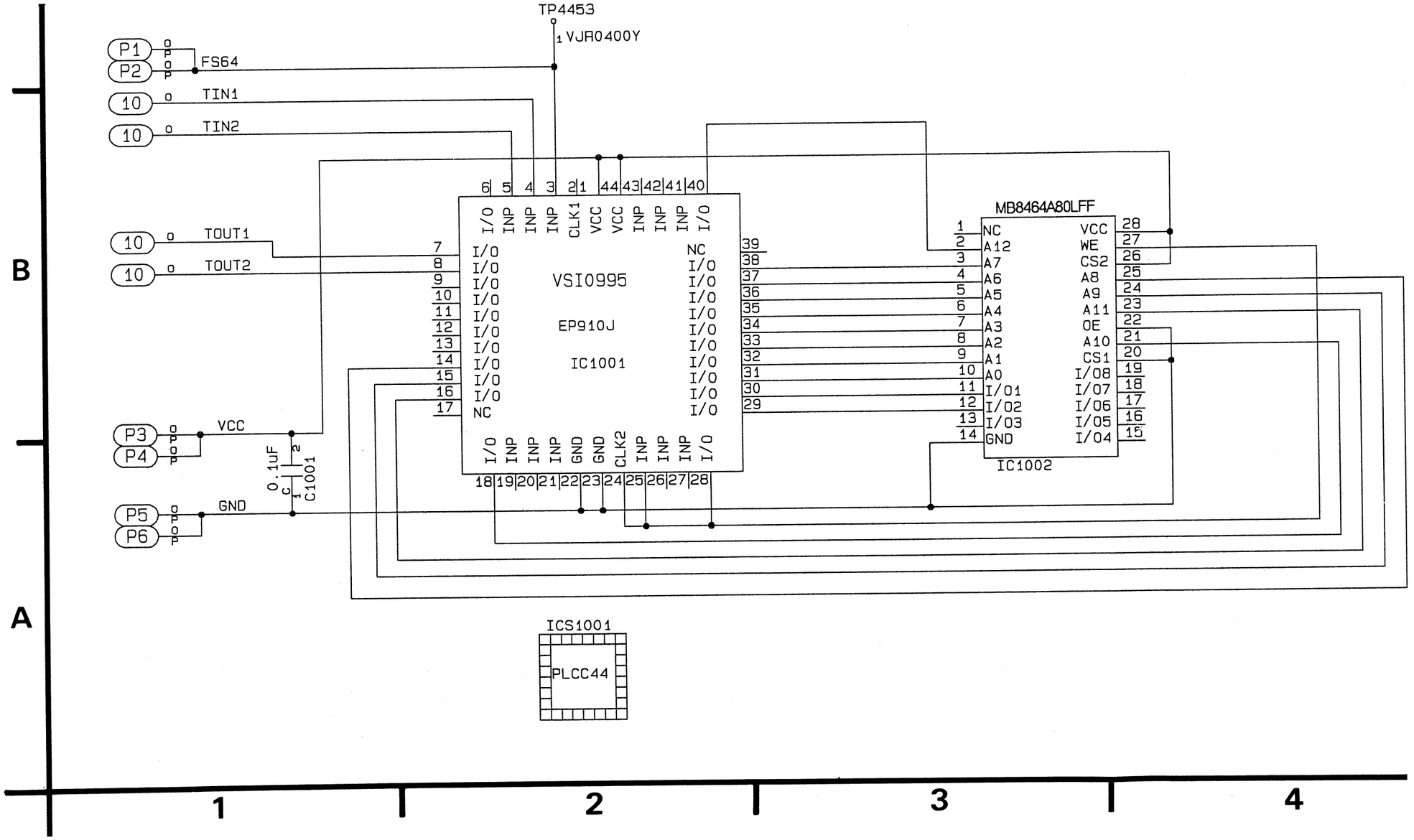

4—2—121

S8 AUDIO PROCESS (DIGITAL I/F) SCHEMATIC DIAGRAM (9/13)

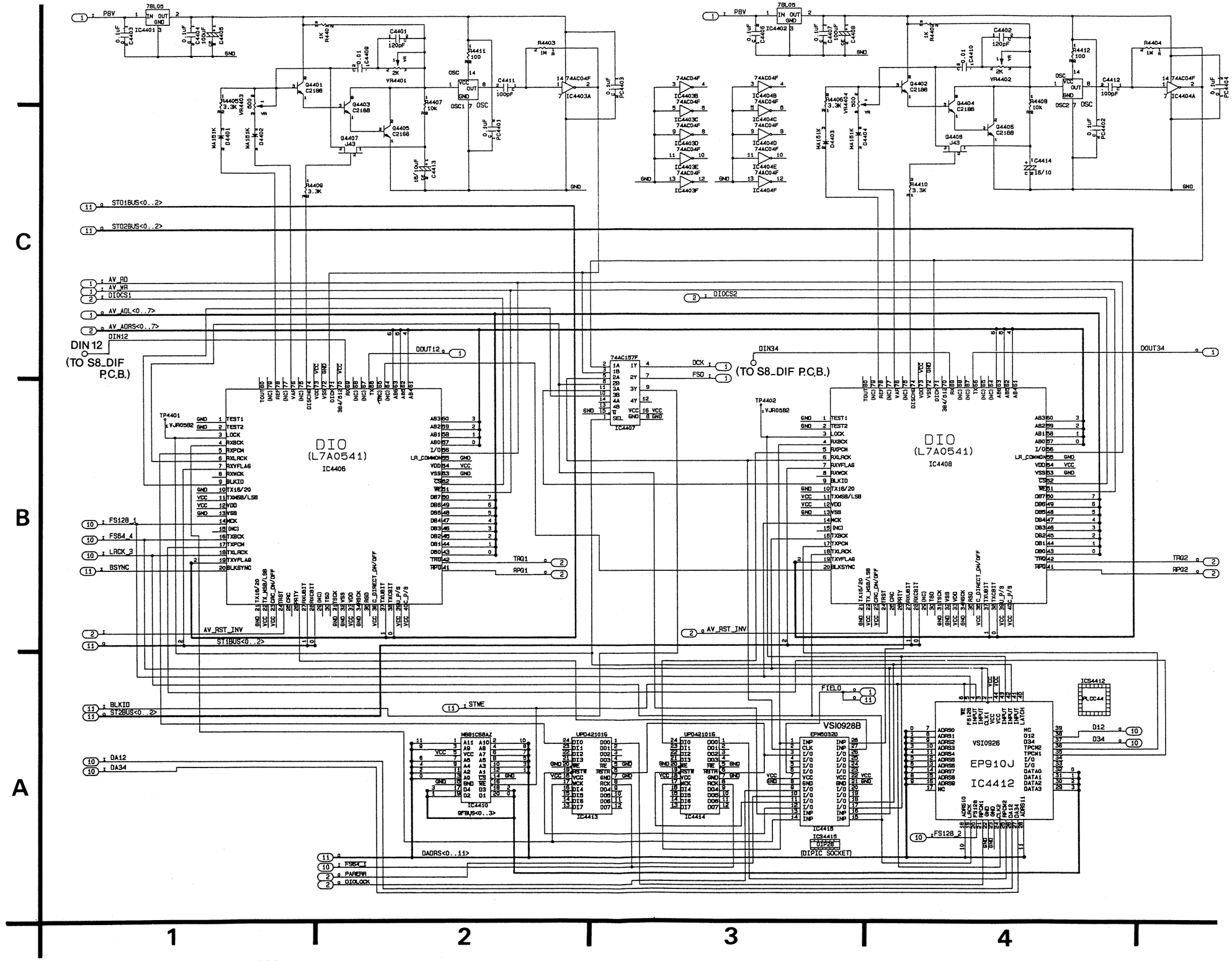

4—2—122

S8 AUDIO PROCESS (FADE) SCHEMATIC DIAGRAM (10/13)

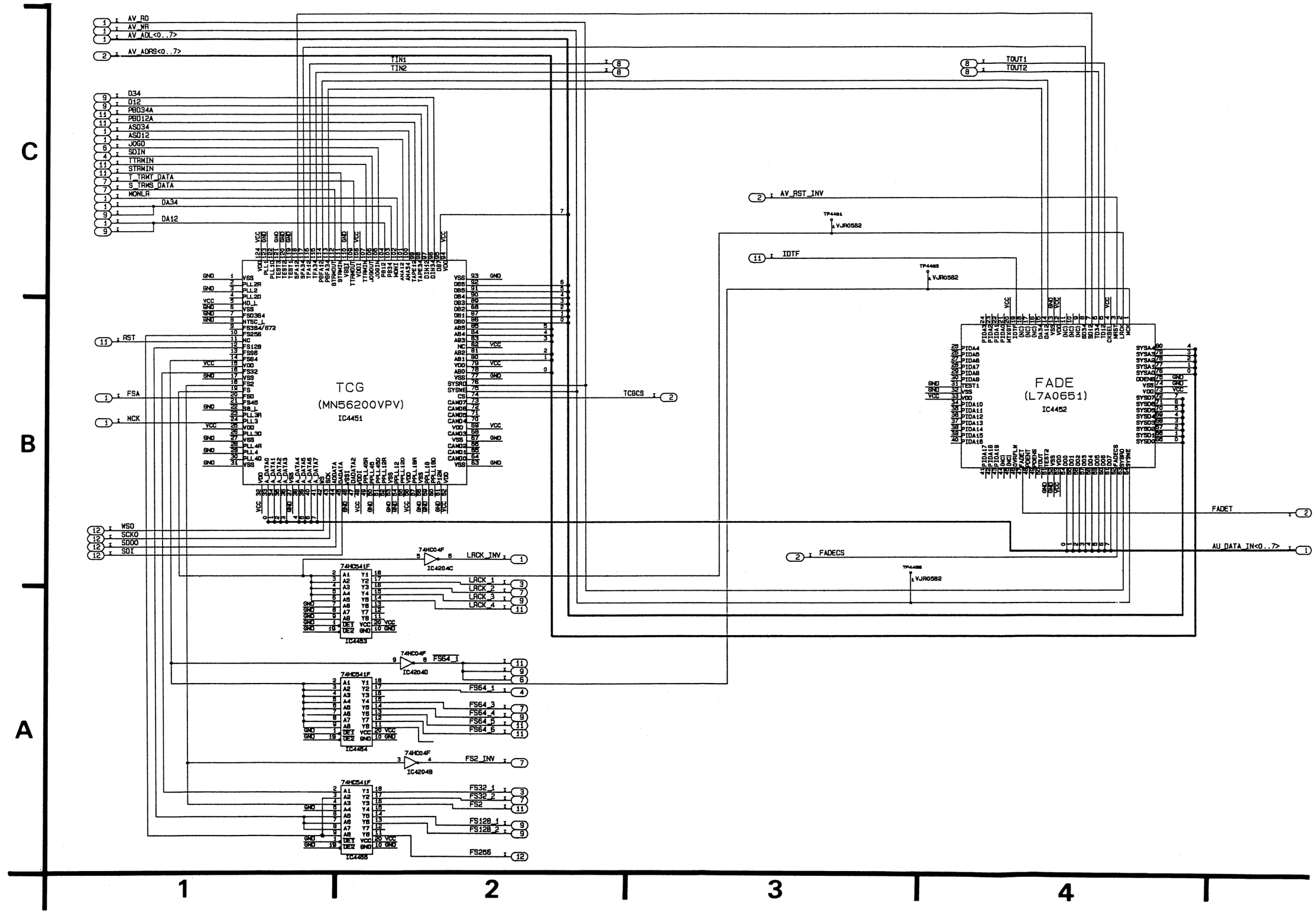

4—2—123

S8 AUDIO PROCESS (D CNT) SCHEMATIC DIAGRAM (11/13)

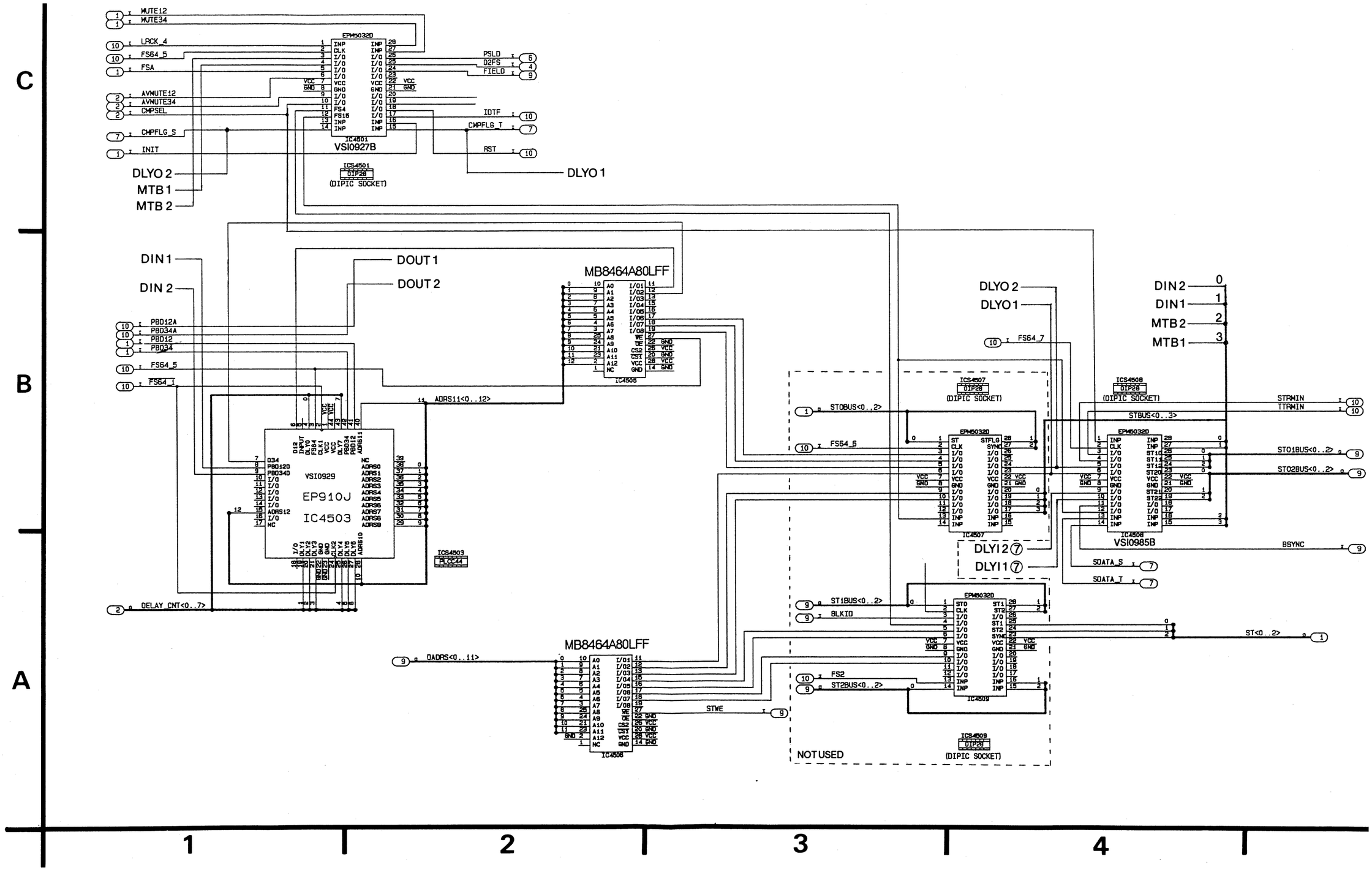

4—2—124

S8 AUDIO PROCESS (D/A CON) SCHEMATIC DIAGRAM (12/13)

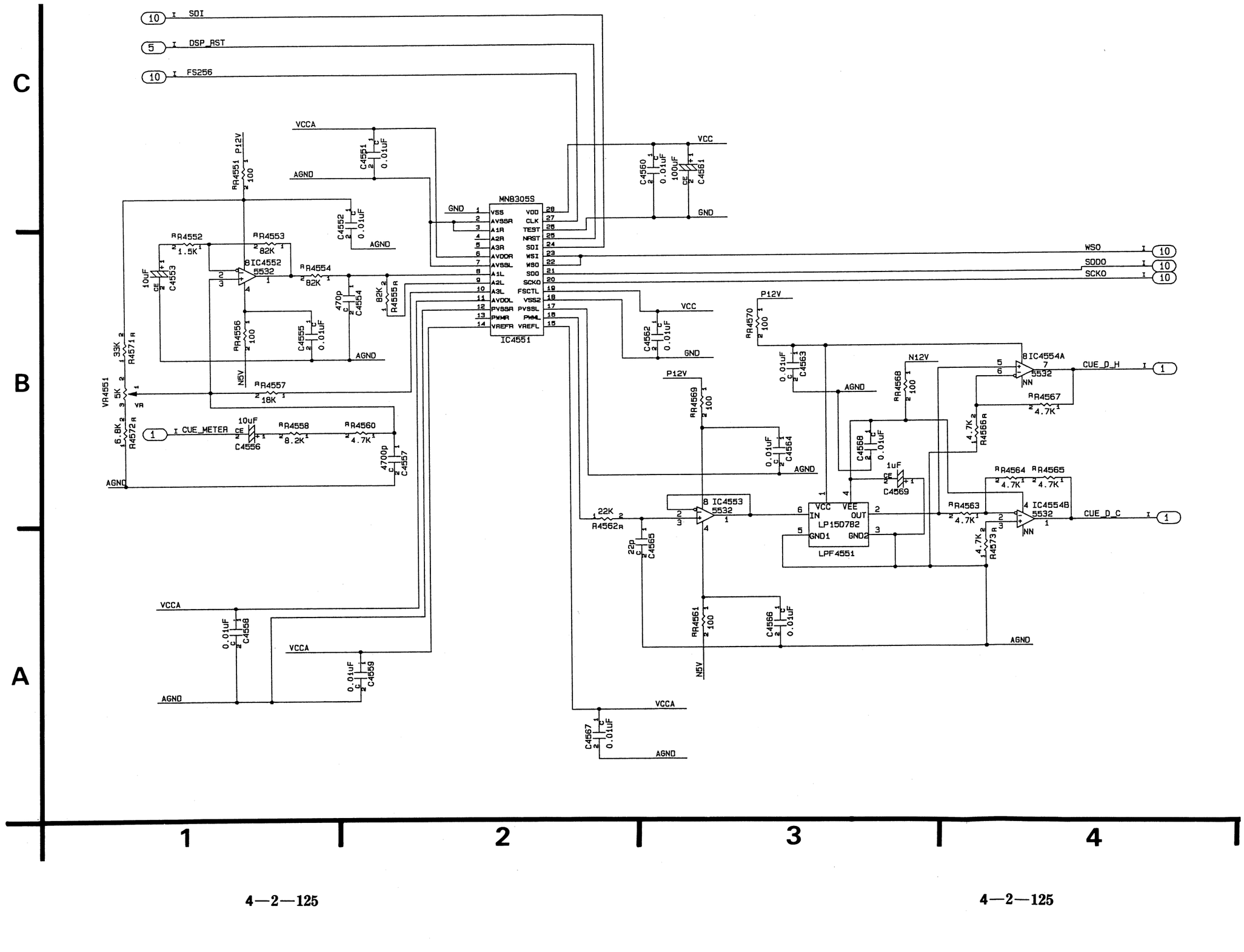

4—2—125

4—2—125

S8 AUDIO PROCESS (PASS CON) SCHEMATIC DIAGRAM (13/13)

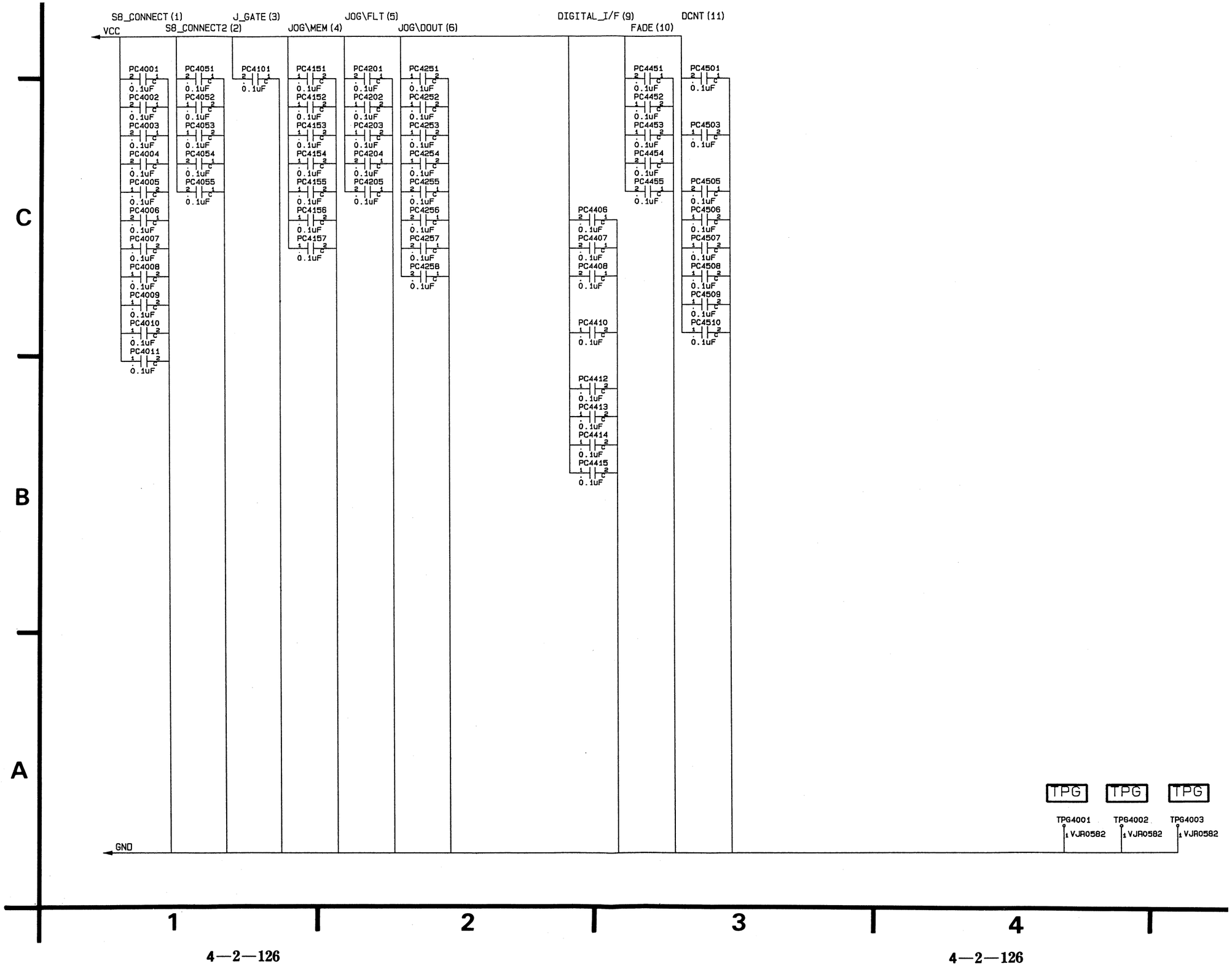

C

B

A

1 2 3 4

4—2—126

S8 AUDIO PROCESS SUB (3V DELAY) SCHEMATIC DIAGRAM (1/3)

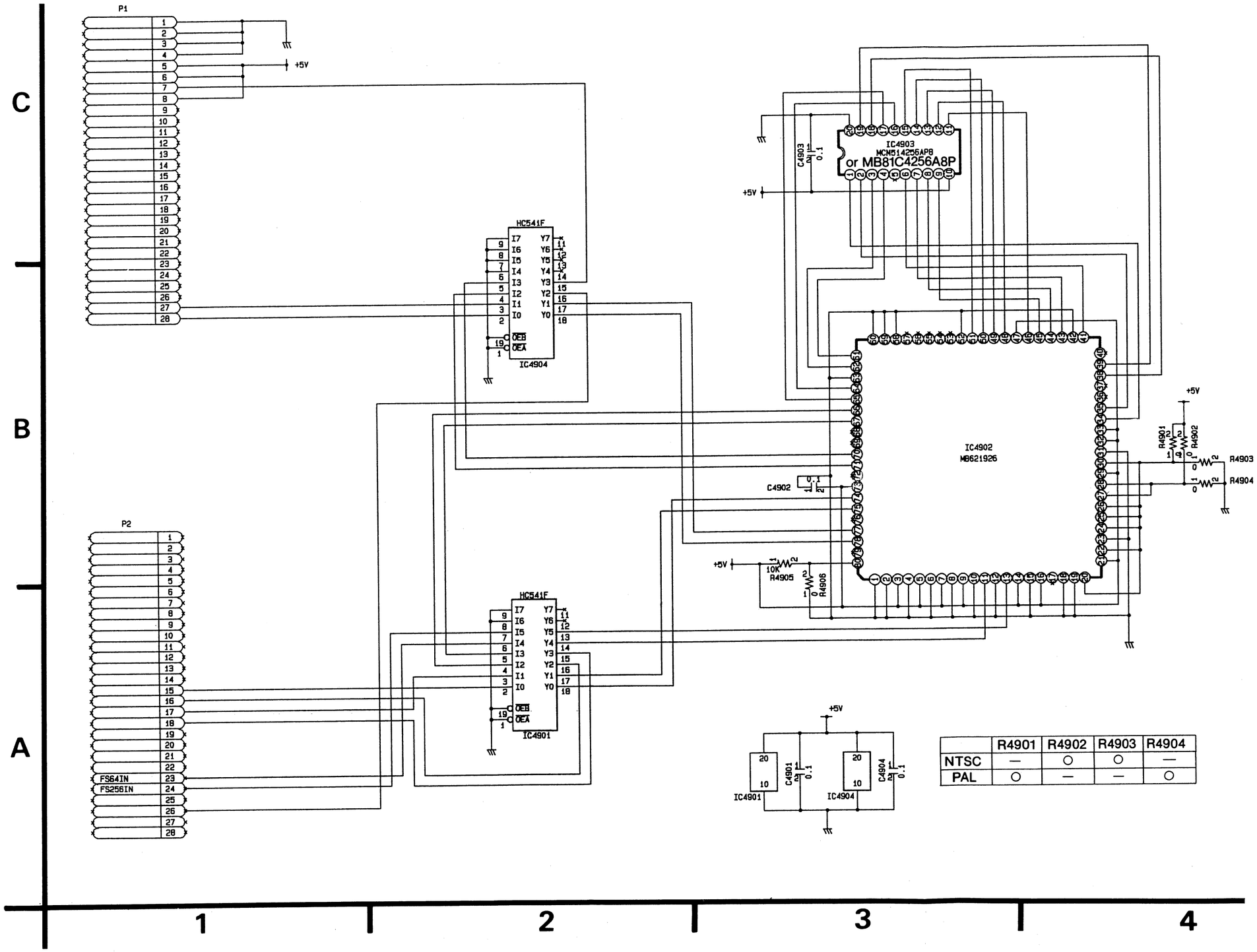

	R4901	R4902	R4903	R4904
NTSC	—	○	○	—
PAL	○	—	—	○

4—2—127

S8 AUDIO PROCESS SUB (TRM MEM) SCHEMATIC DIAGRAM (2/3)

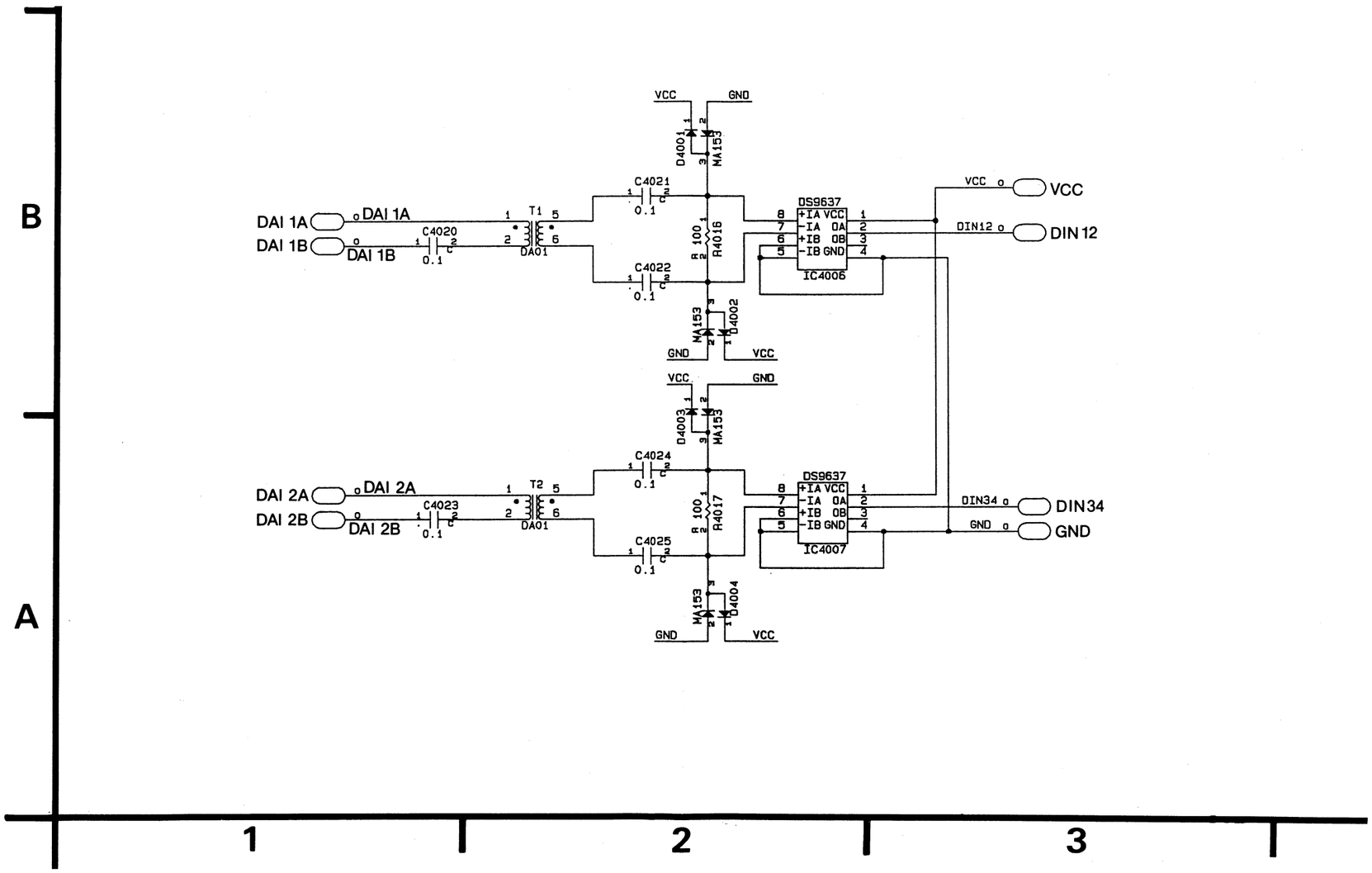

4—2—128

S8 AUDIO PROCESS SUB (MAIN-SUB)
SCHEMATIC DIAGRAM (3/3)

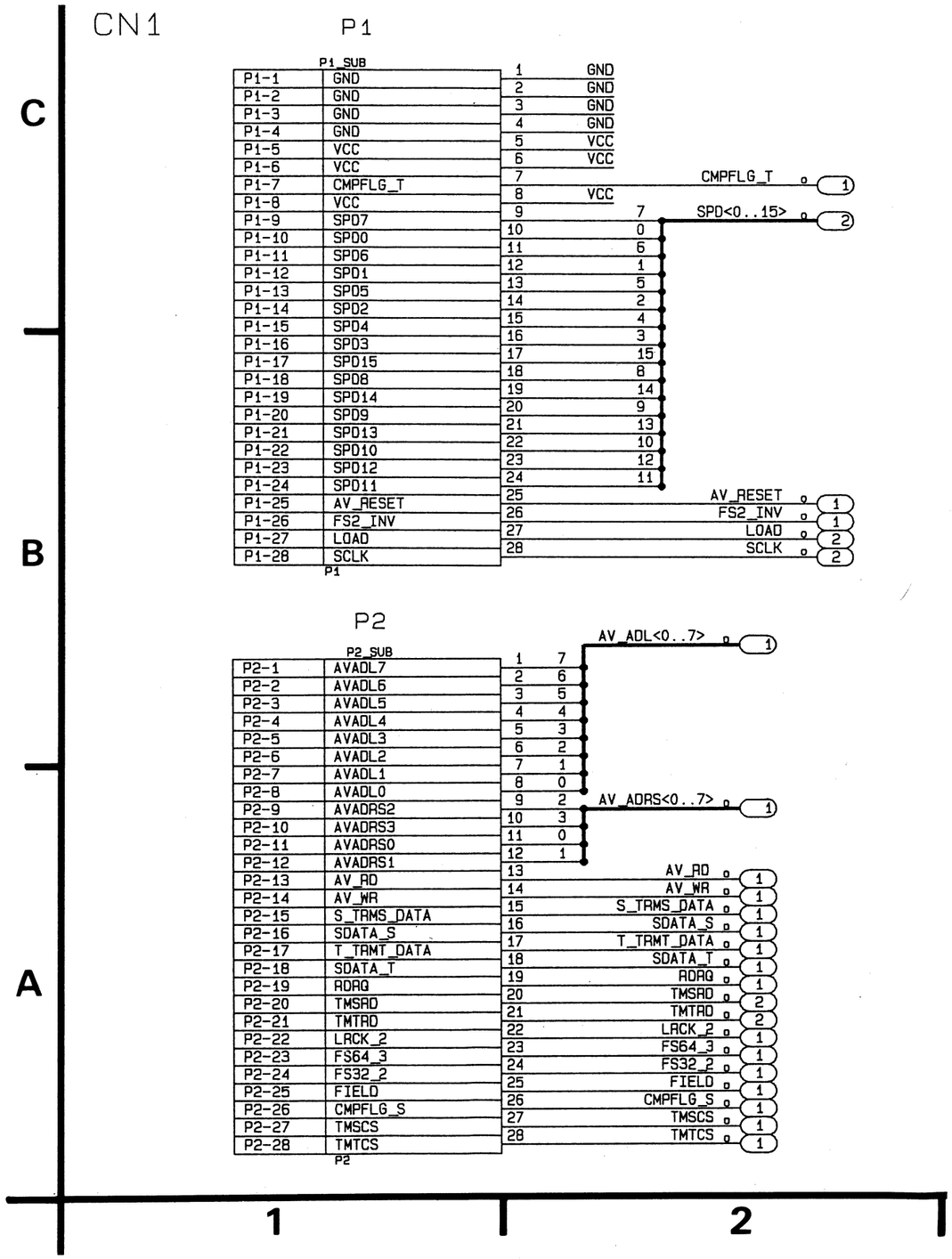

4—2—129

S9 VIDEO A/D PLL SCHEMATIC DIAGRAM (1/7)

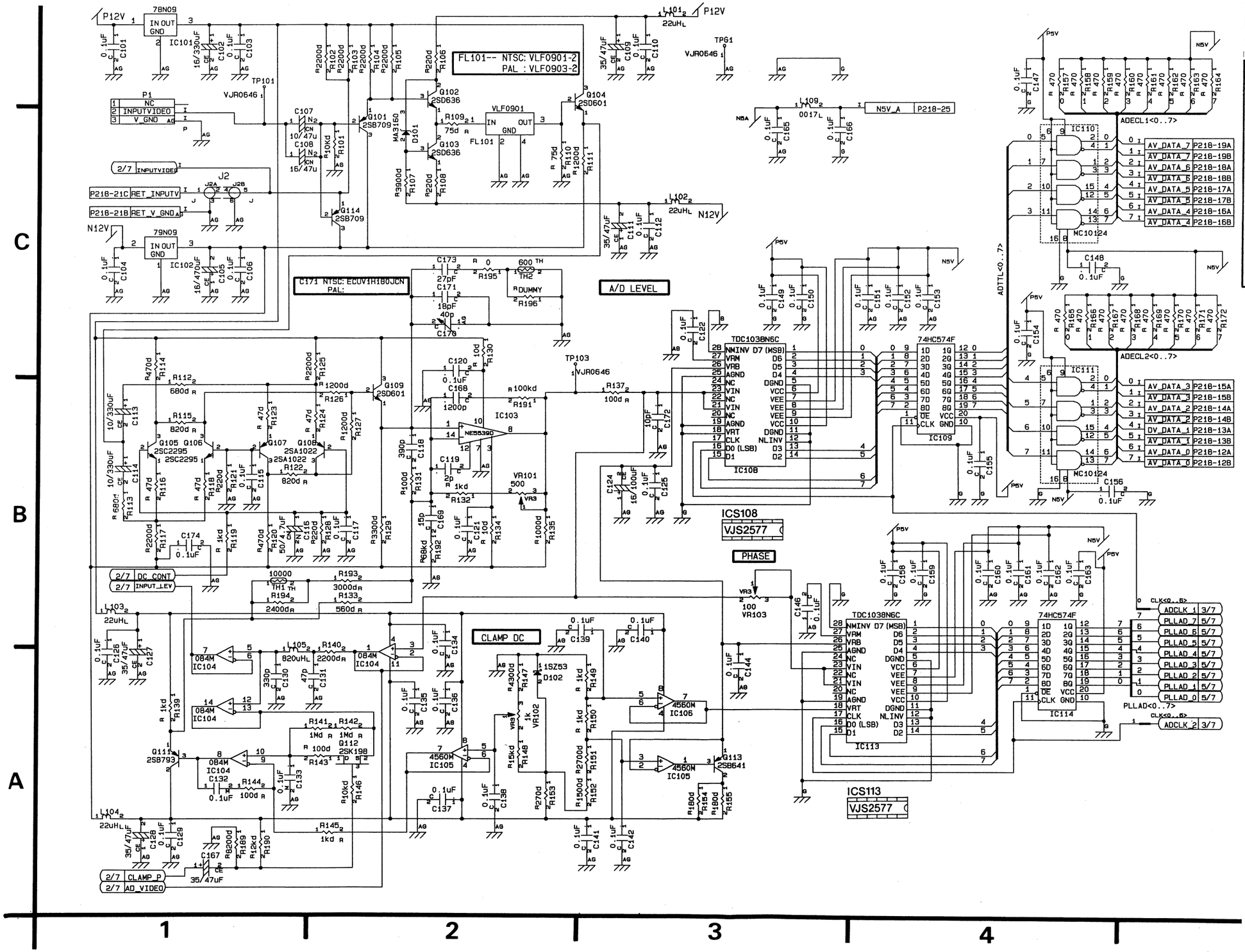

COMPARISON CHART BETWEEN
NTSC MODEL AND PAL MODEL
S9 VIDEO A/D PLL P.C.B.

REF. NO.	NTSC	PAL
IC1	-----	VSI1209
IC2	-----	VSI1210
IC410	-----	VSI0880
IC502	VSI0878	VSI0877
IC611	VSI0981B	VSI0881C
FL101	VLF0910	VLF0903
X402	VSX0338	VSX0270
	VEP88073A	VEP88073B
	-----	VEP88100B

4—2—130

S9 VIDEO A/D PLL SCHEMATIC DIAGRAM (2/7)

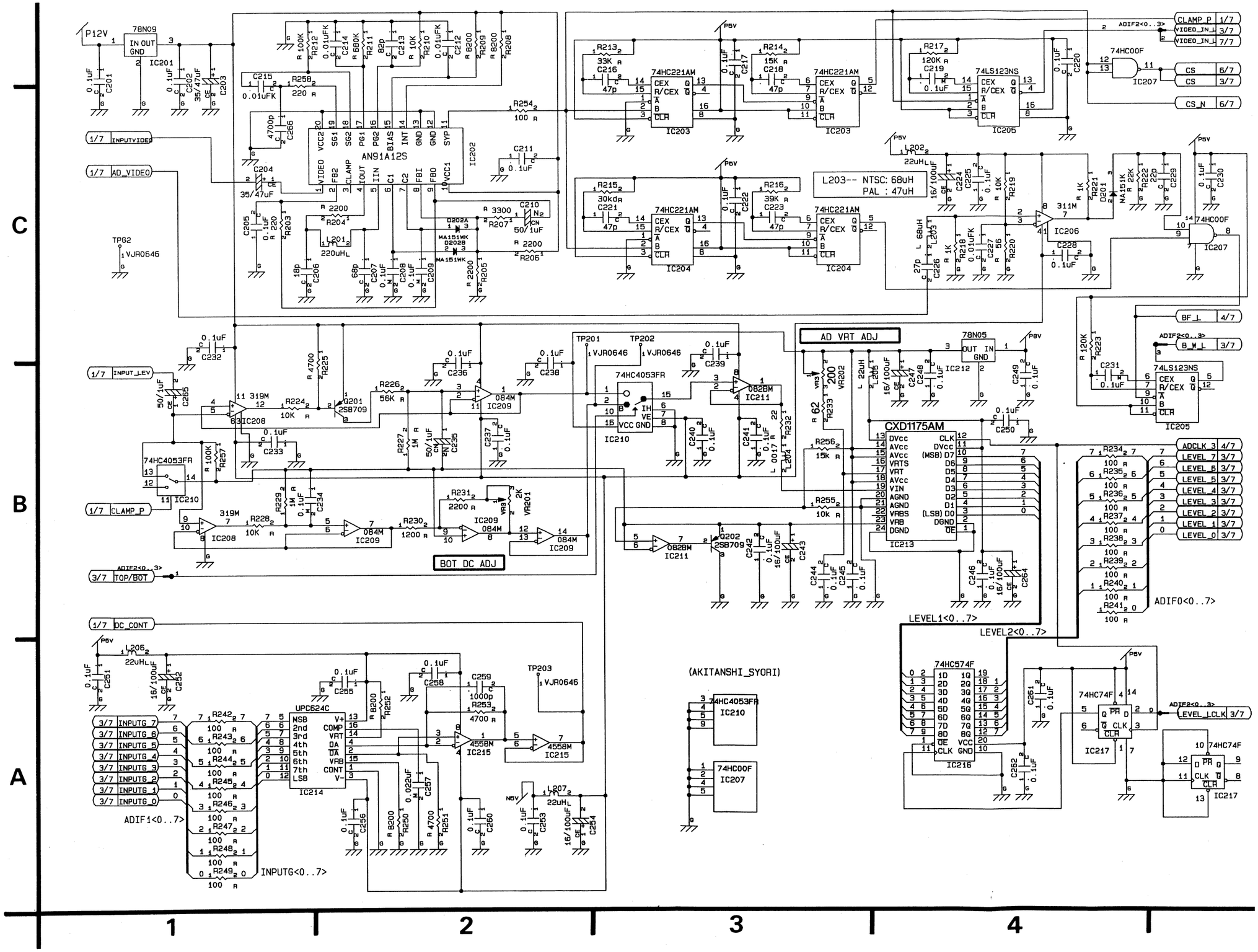

4—2—131

4—2—131

S9 VIDEO A/D PLL SCHEMATIC DIAGRAM (3/7)

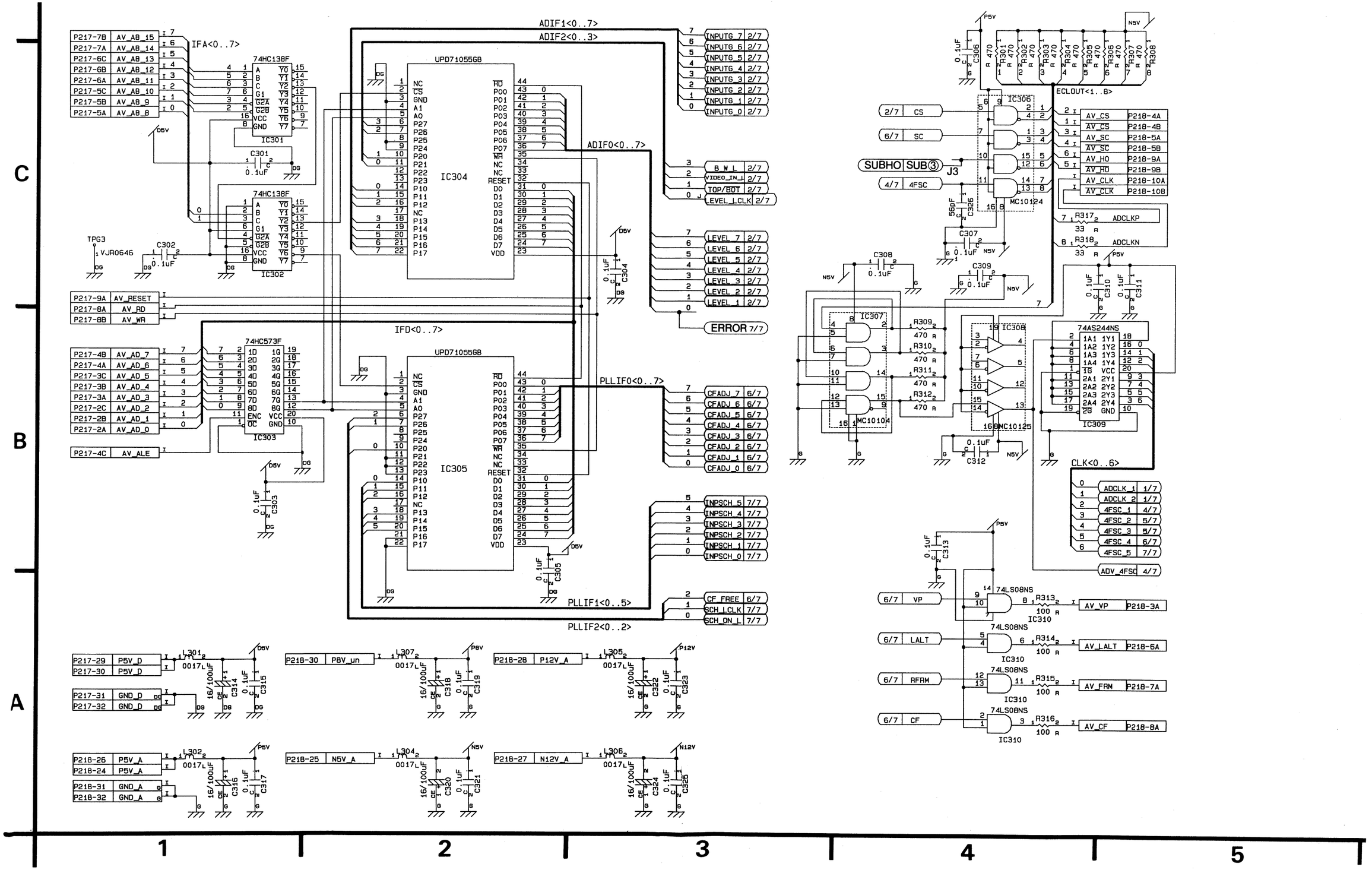

4—2—132

S9 VIDEO A/D PLL SCHEMATIC DIAGRAM (4/7)

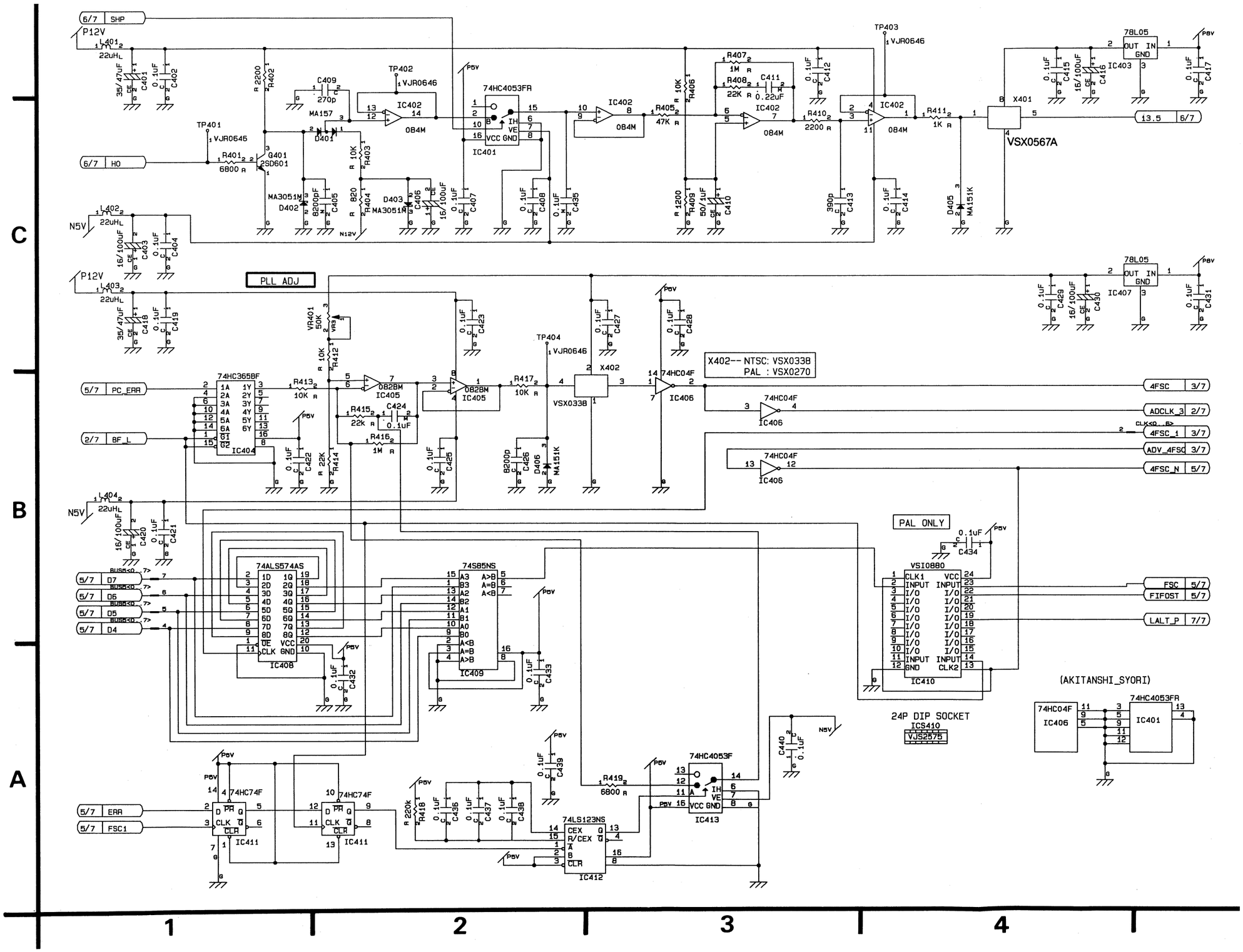

4—2—133

S9 VIDEO A/D PLL SCHEMATIC DIAGRAM (5/7)

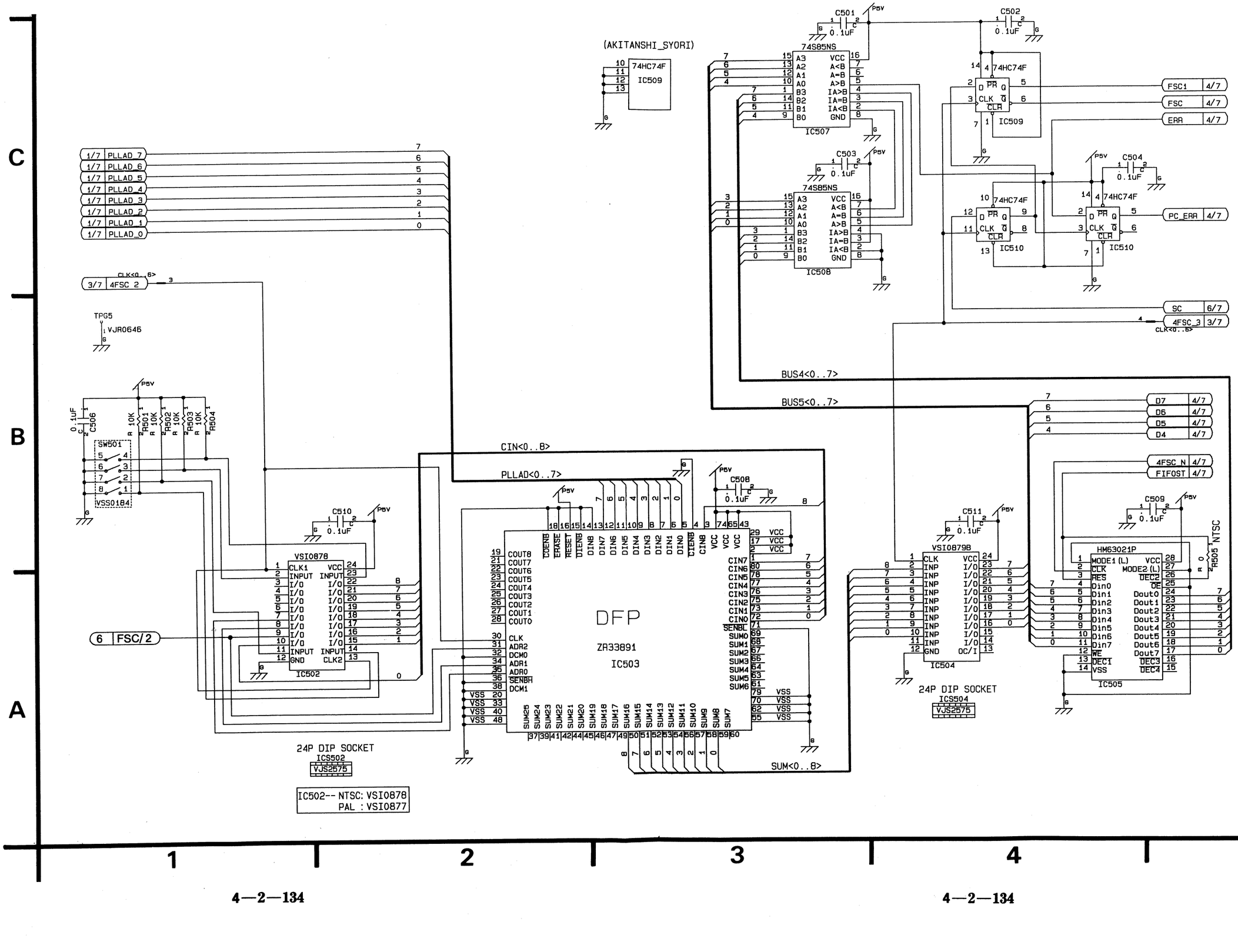

4—2—134

S9 VIDEO A/D PLL SCHEMATIC DIAGRAM (6/7)

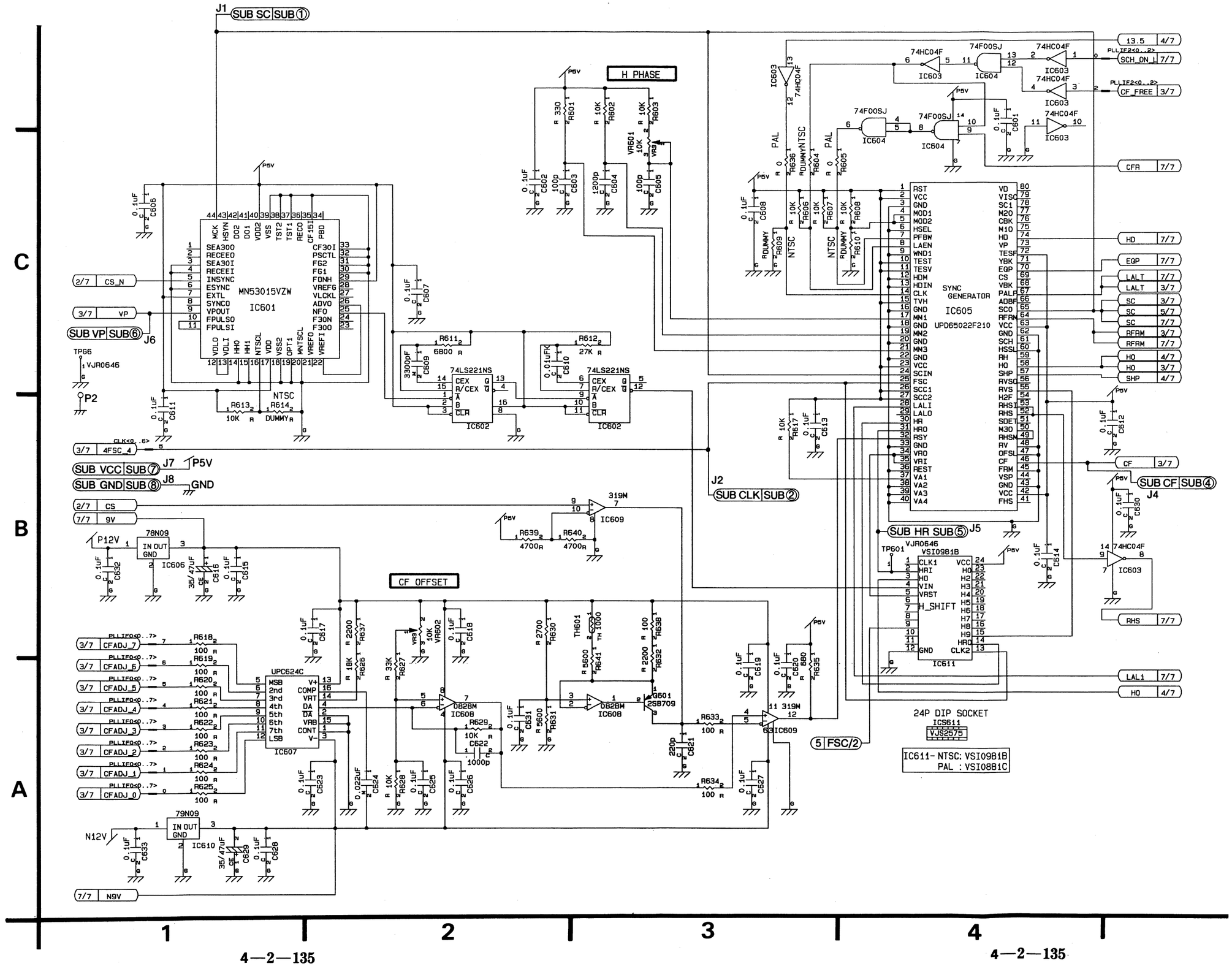

4—2—135

S9 VIDEO A/D PLL SCHEMATIC DIAGRAM (7/7)

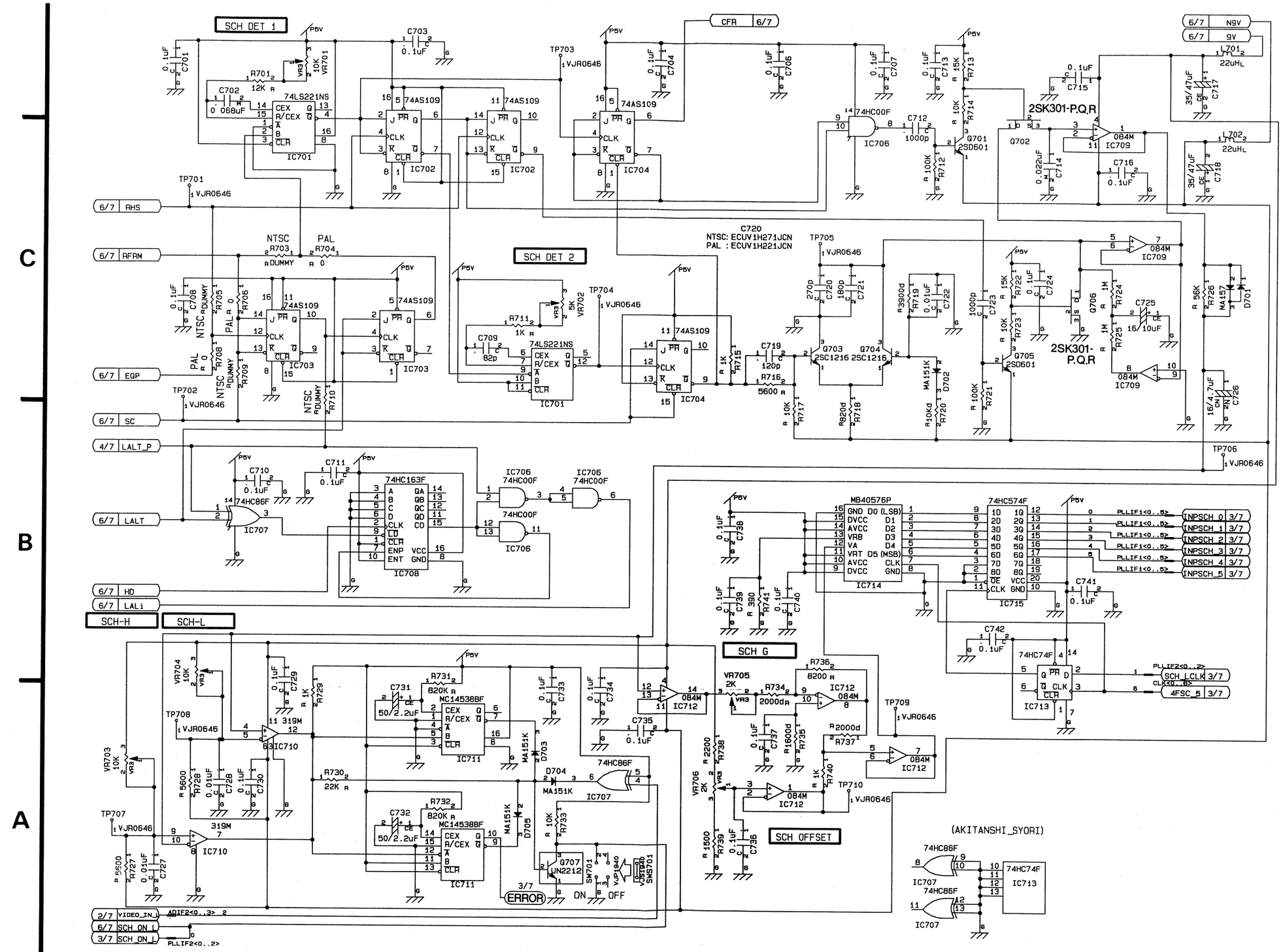

4—2—136

NTSC

S9 WAVEFORMS NTSC

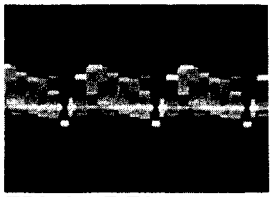

TP8101 E-E2
500mV/20μsec. div.

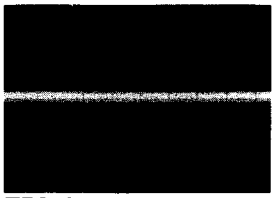

TP8404 E-E2
200mV/20μsec. div.

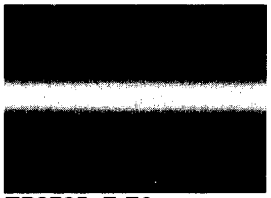

TP8705 E-E2
100mV/2μsec. div.

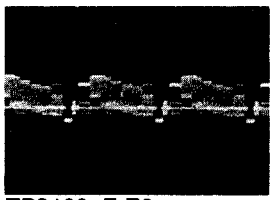

TP8103 E-E2
1V/20μsec. div.

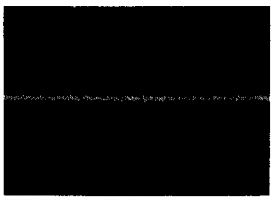

TP8601 E-E2
200mV/10μsec. div.

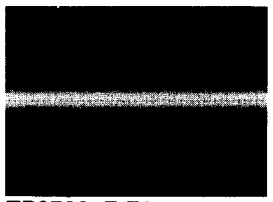

TP8706 E-E2
(TP8707–TP8710)
100mV/2μsec. div.

TP8201 E-E2
(TP8202, TP8203)
100mV/20μsec. div.

TP8701 E-E2
5V/20μsec. div.

TP8401 E-E2
2V/20μsec. div.

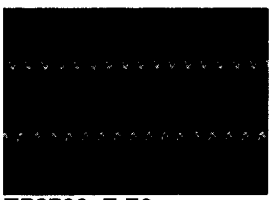

TP8702 E-E2
2V/500nsec. div.

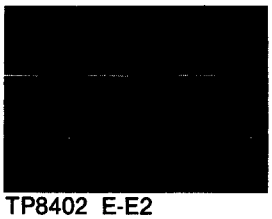

TP8402 E-E2
2V/20μsec. div.

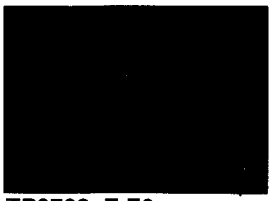

TP8703 E-E2
2V/10msec. div.

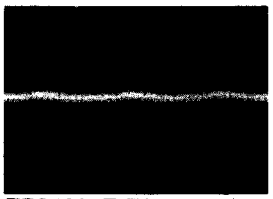

TP8403 E-E2
200mV/20μsec. div.

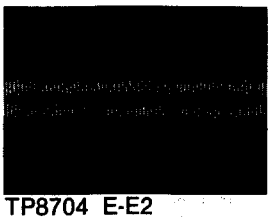

TP8704 E-E2
50mV/2μsec. div.

PAL

S9 WAVEFORMS PAL

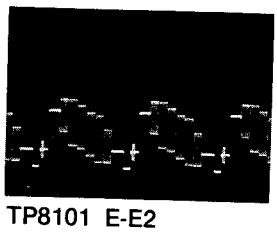

TP8101 E-E2
500mV/20μsec. div.

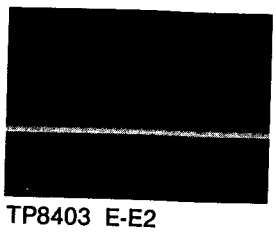

TP8403 E-E2
(TP8404)
200mV/20μsec. div.

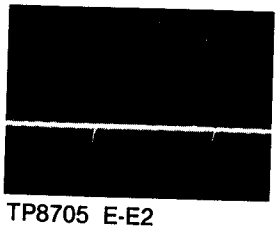

TP8705 E-E2
50mV/10msec. div.

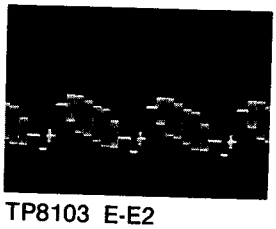

TP8103 E-E2
1V/20μsec. div.

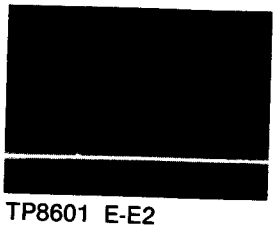

TP8601 E-E2
2V/20μsec. div.

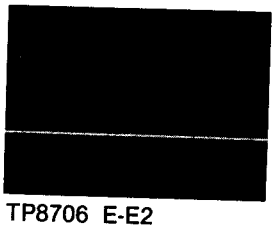

TP8706 E-E2
(TP8707–TP8710)
50mV/20μsec. div.

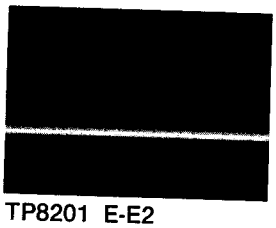

TP8201 E-E2
(TP8203)
20mV/20μsec. div.

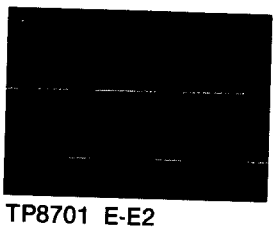

TP8701 E-E2
2V/20μsec. div.

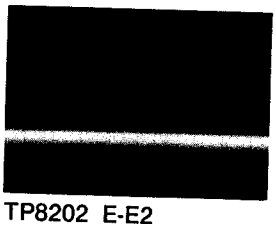

TP8202 E-E2
20mV/20μsec. div.

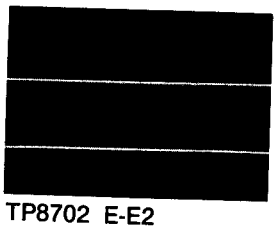

TP8702 E-E2
2V/20μsec. div.

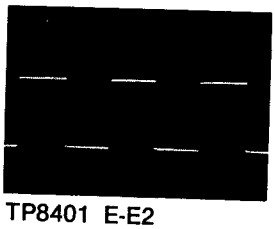

TP8401 E-E2
2V/20μsec. div.

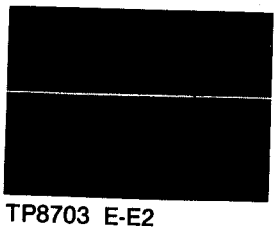

TP8703 E-E2
2V/20msec. div.

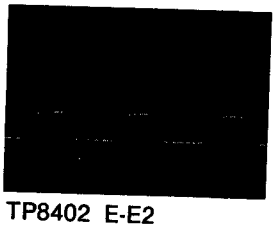

TP8402 E-E2
5V/20μsec. div.

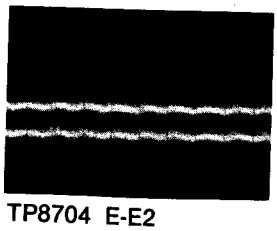

TP8704 E-E2
50mV/20μsec. div.

S9 VIDEO A/D PLL SCHEMATIC DIAGRAM [S MOTHER (P217, P218) SCHEMATIC DIAGRAM (9/14) FOR S9]

P217	A	S 9 FROM / TO			
1	GND (D)				
2	AV AD 0	P213-2A	P215-2A	P245-30B	P211-2A
3	AV AD 3	P213-3A	P215-3A	P245-27B	P211-3A
4	AV AD 6	P213-4A	P215-4A	P245-24B	P211-4A
5	AV AB 8	P213-5A	P215-5A	P245-21B	P211-5A
6	AV AB 11	P213-6A	P215-6A	P245-18B	P211-6A
7	AV AB 14	P213-7A	P215-7A	P245-15B	P211-7A
8	AV RD	P213-8A	P215-8A	P245-12B	P211-8A
9	AV RESET	P215-9A	P245-11B	P245-9B	
10					
11					
12					
13					
14					
15					
16					
17					
18					
19					
20					
21					
22					
23					
24					
25					
26					
27					
28	-5V (D)				
29	+5V (D)				
30	+5V (D)				
31	GND (D)				
32	GND (D)				

IFD<0..7>: 1, 2 0, 3 3, 4 6, 5 0, 6 3, 7 6

IFA<0..7>: 8, 9, 10, 11, 12, 13, 14, 15, 16, 17, 18, 19, 20, 21, 22, 23, 24, 25, 26, 27, 28, 29, 30, 31, 32

P217	B	S 9 FROM / TO			
1	GND (D)				
2	AV AD 1	P213-2B	P215-2B	P245-29B	P211-2B
3	AV AD 4	P213-3B	P215-3B	P245-26B	P211-3B
4	AV AD 7	P213-4B	P215-4B	P245-23B	P211-4B
5	AV AB 9	P213-5B	P215-5B	P245-20B	P211-5B
6	AV AB 12	P213-6B	P215-6B	P245-17B	P211-6B
7	AV AB 15	P213-7B	P215-7B	P245-14B	P211-7B
8	AV WR	P213-8B	P215-8B	P245-11B	P211-8B
9					
10					
11					
12					
13					
14					
15					
16					
17					
18					
19					
20					
21					
22					
23					
24					
25					
26					
27					
28	-5V (D)				
29	+5V (D)				
30	+5V (D)				
31	GND (D)				
32	GND (D)				

IFD<0..7>: 33, 34 1, 35 4, 36 7, 37 1, 38 4, 39 7

IFA<0..7>: 40, 41, 42, 43, 44, 45, 46, 47, 48, 49, 50, 51, 52, 53, 54, 55, 56, 57, 58, 59, 60, 61, 62, 63, 64

P218	A	S 9 FROM / TO			
1					
2					
3	AV VS	P251-30A			
4	AV CS	P251-29A			
5	AV SC	P251-27A			
6	AV LALT	P251-25A			
7	AV FRM	P251-24A			
8	AV CF	P251-23A			
9	AV HO	P251-22A			
10	AV CLK	P251-20A			
11					
12	AV DATA 0	P251-18A			
13	AV DATA 1	P251-16A			
14	AV DATA 2	P251-14A			
15	AV DATA 3	P251-12A			
16	AV DATA 4	P251-10A			
17	AV DATA 5	P251-8A			
18	AV DATA 6	P251-6A			
19	AV DATA 7	P251-4A			
20					
21					
22					
23	GND (A)				
24	+5V (A)				
25	-5V (A)				
26	+5V (A)				
27	-12V (A)				
28	+12V (A)				
29	+15V(un)				
30	+8V (un)				
31	GND (A)				
32	GND (A)				

ECLOUT<1..8>: 1, 2, 3, 4 2, 5 3, 6, 7, 8, 9 5

ADCLKP

ADECL2<0..7>: 10, 11, 12 6, 13 4, 14 2, 15 0, 16 6, 17 4, 18 2, 19 0

ADECL1<0..7>: 20, 21, 22, 23, 24, 25, 26, 27, 28, 29, 30, 31, 32

P218	B	S 9 FROM / TO			
1					
2					
3					
4	AV CS	P251-28A			
5	AV SC	P251-26A			
6					
7					
8					
9	AV HO	P251-21A			
10	AV CLK	P251-19A			
11					
12	AV DATA 0	P251-17A			
13	AV DATA 1	P251-15A			
14	AV DATA 2	P251-13A			
15	AV DATA 3	P251-11A			
16	AV DATA 4	P251-9A			
17	AV DATA 5	P251-7A			
18	AV DATA 6	P251-5A			
19	AV DATA 7	P251-3A			
20					
21	REC INPUT VIDEO GND	P249-2			
22					
23	GND (A)				
24	+5V (A)				
25	-5V (A)				
26	+5V (A)				
27	-12V (A)				
28	+12V (A)				
29	+15V(un)				
30	+8V (un)				
31	GND (A)				
32	GND (A)				

ECLOUT<1..8>: 33, 34, 35, 36 1, 37 4, 38, 39, 40, 41 5

ADCLKN

ADECL2<0..7>: 42, 43, 44 7, 45 5, 46 3, 47 1, 48 7, 49 5, 50 3, 51 1

ADECL1<0..7>: 52, 53, 54, 55, 56, 57, 58, 59, 60, 61, 62, 63, 64

C B A

1 2 3 4 5

MOTHER (P217, P218) SCHEMATIC DIAGRAM (9/14) FOR S9]

P217	B	S 9 FROM / TO					
1	GND (D)					33	
2	AV AD 1	P213-2B	P215-2B	P245-29B	P211-2B	34	1
3	AV AD 4	P213-3B	P215-3B	P245-26B	P211-3B	35	4
4	AV AD 7	P213-4B	P215-4B	P245-23B	P211-4B	36	7
5	AV AB 9	P213-5B	P215-5B	P245-20B	P211-5B	37	1
6	AV AB 12	P213-6B	P215-6B	P245-17B	P211-6B	38	4
7	AV AB 15	P213-7B	P215-7B	P245-14B	P211-7B	39	7
8	AV WR	P213-8B	P215-8B	P245-11B	P211-8B	40	
9						41	
10						42	
11						43	
12						44	
13						45	
14						46	
15						47	
16						48	
17						49	
18						50	
19						51	
20						52	
21						53	
22						54	
23						55	
24						56	
25						57	
26						58	
27						59	
28	-5V (D)					60	
29	+5V (D)					61	
30	+5V (D)					62	
31	GND (D)					63	
32	GND (D)					64	

IFD<0..7>
IFA<0..7>

P217	C	S 9 FROM / TO					
1	GND (D)					65	
2	AV AD 2	P213-2C	P215-2C	P245-28B	P211-2C	66	2
3	AV AD 5	P213-3C	P215-3C	P245-25B	P211-3C	67	5
4	AV ALE	P213-4C	P215-4C	P245-22B	P211-4C	68	
5	AV AB 10	P213-5C	P215-5C	P245-19B	P211-5C	69	2
6	AV AB 13	P213-6C	P215-6C	P245-16B	P211-6C	70	5
7						71	
8						72	
9						73	
10						74	
11						75	
12						76	
13						77	
14						78	
15						79	
16						80	
17						81	
18						82	
19						83	
20						84	
21						85	
22						86	
23						87	
24						88	
25						89	
26						90	
27						91	
28	-5V (D)					92	
29	+5V (D)					93	
30	+5V (D)					94	
31	GND (D)					95	
32	GND (D)					96	

IFD<0..7>
IFA<0..7>

P218	B	S 9 FROM / TO					
1						33	
2						34	
3						35	
4	AV $\overline{CS}$	P251-28A				36	1
5	AV $\overline{SC}$	P251-26A				37	4
6						38	
7						39	
8						40	
9	AV $\overline{HD}$	P251-21A				41	5
10	AV $\overline{CLK}$	P251-19A				42	
11						43	
12	AV DATA $\overline{0}$	P251-17A				44	7
13	AV DATA $\overline{1}$	P251-15A				45	5
14	AV DATA $\overline{2}$	P251-13A				46	3
15	AV DATA $\overline{3}$	P251-11A				47	1
16	AV DATA $\overline{4}$	P251-9A				48	7
17	AV DATA $\overline{5}$	P251-7A				49	5
18	AV DATA $\overline{6}$	P251-5A				50	3
19	AV DATA $\overline{7}$	P251-3A				51	1
20						52	
21	REC INPUT VIDEO GND	P249-2				53	
22						54	
23	GND (A)					55	
24	+5V (A)					56	
25	-5V (A)					57	
26	+5V (A)					58	
27	-12V (A)					59	
28	+12V (A)					60	
29	+15V (un)					61	
30	+8V (un)					62	
31	GND (A)					63	
32	GND (A)					64	

ECLOUT<1..8>
ADCLKN
ADECL2<0..7>
ADECL1<0..7>

P218	C	S 9 FROM / TO					
1						65	
2						66	
3						67	
4						68	
5						69	
6						70	
7						71	
8						72	
9						73	
10						74	
11						75	
12						76	
13						77	
14						78	
15						79	
16						80	
17						81	
18						82	
19						83	
20						84	
21	REC INPUT VIDEO	P249-1				85	
22						86	
23	GND (A)					87	
24	+5V (A)					88	
25	-5V (A)					89	
26	+5V (A)					90	
27	-12V (A)					91	
28	+12V (A)					92	
29	+15V (un)					93	
30	+8V (un)					94	
31	GND (A)					95	
32	GND (A)					96	

3 4 5 6

P233
HIROSE PCN13-96S-2.54DSA

FROM / TO					A		B	FROM / TO				
GND					AG	1	AG					GND
STOP_L				P209-10A	DRUM STOP L	2	DRUM BRK L	P209-9C				BRAKE_L
D_SW_L				P209-11C	DRUM SW L	3	D ERR	P209-10B				D_ERR
DRVAG			P209-13B	P209-12C	AG (D&C)	4	AG (D&C)	P209-10C	P209-11B			DRVAG
CAP_ERR				P209-12B	CAP ERR	5	CAP EDS	P209-12A				CAP_EDS
*						6	CAP RCC	P209-13C				CAP_RCC
S_R_ERR				P209-14B	S R ERR	7	T R ERR	P209-14A				T_R_ERR
*						8	2.5V	P209-14C				2.5V
MCONT6				P213-22B	MCONT 6	9	MCONT 5	P213-22A				MCONT5
SYS_RST	P211-9C	P241-12B	P260-9	P213-9C	SYS RESET	10	PINCH ON	P213-23A	P209-8C			PINCH_ON
T_BRK_ON				P213-23C	T BRK ON	11	S BRK ON	P213-23B				S_BRK_ON
CLEAN_ON				P213-24C	CLEN ON	12	STOP ON	P213-24B				STOP_ON
MCONT_2				P213-25A	MCONT 2	13	MCONT 1	P213-24A				MCONT_1
MCONT_4				P213-25C	MCONT 4	14	MCONT 3	P213-25B				MCONT_3
S_R_D_ON				P213-26B	S REEL DRV ON	15	T REEL DRV ON	P213-26A				T_R_D_ON
MCONT8				P213-26C	MCONT 8	16	MCONT 7	P213-22C				MCONT7

P241
HIROSE PCN13-96S-2.54DSA
S

FROM / TO					A		B	FROM / TO				
+12V (A)					+12V (A)	1	+12V (A)					+12V (A)
+5V (D)					+5V (D)	2	+5V (D)					+5V (D)
GND					GND (D)	3	GND (D)					GND
SYS_AB_0		P260-1	P211-9B	P213-9B	SYS AB 0	4	SYS DB 0	P261-1	P211-9A	P213-9A		SYS_DB_0
SYS_AB_1		P260-2	P211-10B	P213-10B	SYS AB 1	5	SYS DB 1	P261-2	P211-10A	P213-10A		SYS_DB_1
SYS_AB_2		P260-3	P211-11B	P213-11B	SYS AB 2	6	SYS DB 2	P261-3	P211-11A	P213-11A		SYS_DB_2
SYS_AB_3		P260-4	P211-12B	P213-12B	SYS AB 3	7	SYS DB 3	P261-4	P211-12A	P213-12A		SYS_DB_3
SYS_AB_4		P260-5	P211-13B	P213-13B	SYS AB 4	8	SYS DB 4	P261-5	P211-13A	P213-13A		SYS_DB_4
SYS_AB_5		P260-6	P211-14B	P213-14B	SYS AB 5	9	SYS DB 5	P261-6	P211-14A	P213-14A		SYS_DB_5
SYS_AB_6		P260-7	P211-15B	P213-15B	SYS AB 6	10	SYS DB 6	P261-7	P211-15A	P213-15A		SYS_DB_6
SYS_AB_7		P260-8	P211-16B	P213-16B	SYS AB 7	11	SYS DB 7	P261-8	P211-16A	P213-16A		SYS_DB_7
SYS_IORD		P260-10	P211-10C	P213-10C	SYS IORD	12	SYS RESET	P260-9	P211-9C	P213-9C	P233-10A	P205-9C
SYS_IOWR		P260-11	P211-11C	P213-11C	SYS IOWR	13						*

FROM / TO	
CS_UP_SW	
CS_DO_SW	
L_CS_IN	
M_CS_IN	
RP_FRONT	
RP_CNTER	
RP_BACK	
ML_START	
ML_END	
ML_CNTER	
DEW_SENS	
SEN_LEDA	
SEN_LEDK	
*	
*	
*	

FROM / TO		
GND		
BLK_SYNC		
PB_H_SW		
P_TP_FRM		
FV/8		
FV/4		
FV/2		P207-16B
90/100HZ		
AU_D_IN7		
AU_D_IN6		
AU_D_IN5		
AU_D_IN4		
AU_D_IN3		
AU_D_IN2		
AU_D_IN1		
AU_D_IN0		
FILD		
PB5F		
VALIDF		
MUTE_34		
MUTE_12		
STFLG		
STO		
PBD_34		
PBD_12		
DSD_L		
DSD_3		
DSD_1		
ASD_3		
ASD_1		

S MOTHER (P242, P245) SCHEMATIC DIAGRAM (11/14)

233

-96S-2.54DSA

	B	FROM / TO				
	AG					GND
2	DRUM BRK L	P209-9C				BRAKE_L
3	D ERR	P209-10B				D_ERR
	AG (D&C)	P209-10C	P209-11B			DRVAG
	CAP EDS	P209-12A				CAP_EDS
6	CAP RCC	P209-13C				CAP_RCC
	T R ERR	P209-14A				T_R_ERR
	2.5V	P209-14C				2.5V
9	MCONT 5	P213-22A				MCONT5
10	PINCH ON	P213-23A	P209-8C			PINCH_ON
1	S BRK ON	P213-23B				S_BRK_ON
12	STOP ON	P213-24B				STOP_ON
13	MCONT 1	P213-24A				MCONT_1
1	MCONT 3	P213-25B				MCONT_3
1	T REEL DRV ON	P213-26A				T_R_D_ ON
16	MCONT 7	P213-22C				MCONT7

1

13-96S-2.54DSA

	B	FROM / TO				
	+12V (A)					+12V (A)
	+5V (D)					+5V (D)
3	GND (D)					GND
4	SYS DB 0	P261-1	P211-9A	P213-9A		SYS_DB_0
	SYS DB 1	P261-2	P211-10A	P213-10A		SYS_DB_1
	SYS DB 2	P261-3	P211-11A	P213-11A		SYS_DB_2
7	SYS DB 3	P261-4	P211-12A	P213-12A		SYS_DB_3
	SYS DB 4	P261-5	P211-13A	P213-13A		SYS_DB_4
	SYS DB 5	P261-6	P211-14A	P213-14A		SYS_DB_5
10	SYS DB 6	P261-7	P211-15A	P213-15A		SYS_DB_6
11	SYS DB 7	P261-8	P211-16A	P213-16A		SYS_DB_7
1	SYS RESET	P260-9	P211-9C	P213-9C	P233-10A	P205-9C SYS_RST
1						*

3 4

C

B

A

P242

HIROSE PCN13-96S-2.54DA/FITS

FROM / TO				A		B	FROM / TO				
CS_UP_SW			P214-12B	CASS UP SW	1	SUB LOAD CEN	P214-20B				SL_CNTER
CS_DO_SW			P214-12C	CASS DOWN SW	2	CASS DET A	P214-10A				CS_DET_A
L_CS_IN			P214-13B	L CASS IN	3	CASS DET B	P214-10B				CS_DET_B
M_CS_IN			P214-13C	M CASS IN	4	CASS DET C	P214-10C				CS_DET_C
RP_FRONT			P214-14C	REEL POS FRONT	5	CASS IN SW L	P214-11B				CS_I_S_L
RP_CNTER			P214-15C	REEL POS CENTER	6	CASS IN SW R	P214-11C				CS_I_S_R
RP_BACK			P214-16C	REEL POS BACK	7	S PHOTO	P214-11A				S_PHOTO
ML_START			P214-14B	MAIN LOAD START	8	T PHOTO	P214-12A				T_PHOTO
ML_END			P214-15B	MAIN LOAD END	9	SUB LOAD START	P214-13A				SL_START
ML_CNTER			P214-16B	MAIN LOAD CENTER	10	SUB LOAD END	P214-14A				SL_END
DEW_SENS			P214-17C	DEW SENS	11	CASS DET F	P214-15A				CS_DET_F
SEN_LEDA			P214-17B	SENS LED A	12	CASS DET R	P214-16A				CS_DET_R
SEN_LEDK			P214-18B	SENS LED K	13	CASS DET S	P214-17A				CS_DET_S
					14	CASS DET T	P214-18A				CS_DET_T
					15						
					16						

P245

HIROSE PCN13-96S-2.54DSA

S

FROM / TO				A		B	FROM / TO				
GND				GND (D)	1	GND (D)					GND
BLK_SYNC			P215-17C	BLK_SYNC	2	TEST EE2	P203-20A	P201-20A	P502-11		TEST_EE2
PB_H_SW			P209-17C	PB HSW	3	ENV DET CH1	P204-14A				ENV_DET1
P_TP_FRM			P209-17B	PB TP FRAME	4	ENV DET CH0	P202-14A	P204-9A			ENV_DET0
FV/8			P209-17A	FV/8	5	SEG_VAG	P207-10B				SEG_VAG
FV/4			P209-16C	FV/4	6	PB_FN0	P207-10A				PB_FN0
FV/2		P207-16B	P209-16B	FV/2	7	SEG 1	P207-9B				SEG_1
90/100HZ			P209-16A	90/100 HZ	8	SEG 0	P207-9A				SEG_0
AU_D_IN7			P215-26B	AU DATA IN 7	9	AV RESET	P215-9A	P217-9A			AV_RESET
AU_D_IN6			P215-26A	AU DATA IN 6	10	AV BUSY	P213-8C	P211-8C			AV_BUSY
AU_D_IN5			P215-25C	AU DATA IN 5	11	AV WR	P217-8B	P215-8B	P213-8B	P211-8B	AV_WR
AU_D_IN4			P215-25B	AU DATA IN 4	12	AV RD	P217-8A	P215-8A	P213-8A	P211-8A	AV_RD
AU_D_IN3			P215-25A	AU DATA IN 3	13	AV SYS INT	P213-7C			P211-7C	AV_S_INT
AU_D_IN2			P215-24C	AU DATA IN 2	14	AV AB 15	P217-7B	P215-7B	P213-7B	P211-7B	AV_AB_15
AU_D_IN1			P215-24B	AU DATA IN 1	15	AV AB 14	P217-7A	P215-7A	P213-7A	P211-7A	AV_AB_14
AU_D_IN0			P215-24A	AU DATA IN 0	16	AV AB 13	P217-6C	P215-6C	P213-6C	P211-6C	AV_AB_13
FILD			P215-22C	FILD	17	AV AB 12	P217-6B	P215-6B	P213-6B	P211-6B	AV_AB_12
PB5F			P215-22B	PB5F	18	AV AB 11	P217-6A	P215-6A	P213-6A	P211-6A	AV_AB_11
VALIDF			P215-22A	VALIDF	19	AV AB 10	P217-5C	P215-5C	P213-5C	P211-5C	AV_AB_10
MUTE_34			P215-20B	MUTE 34	20	AV AB 9	P217-5B	P215-5B	P213-5B	P211-5B	AV_AB_9
MUTE_12			P215-20A	MUTE 12	21	AV AB 8	P217-5A	P215-5A	P213-5A	P211-5A	AV_AB_8
STFLG			P215-17B	STFLG	22	AV ALE	P217-4C	P215-4C	P213-4C	P211-4C	AV_ALE
STO			P215-17A	STO	23	AV AD 7	P217-4B	P215-4B	P213-4B	P211-4B	AV_AD_7
PBD_34			P215-16B	PBD 34	24	AV AD 6	P217-4A	P215-4A	P213-4A	P211-4A	AV_AD_6
PBD_12			P215-16A	PBD 12	25	AV AD 5	P217-3C	P215-3C	P213-3C	P211-3C	AV_AD_5
DSD_L			P215-15B	DSD L	26	AV AD 4	P217-3B	P215-3B	P213-3B	P211-3B	AV_AD_4
DSD_3			P215-14C	DSD 3	27	AV AD 3	P217-3A	P215-3A	P213-3A	P211-3A	AV_AD_3
DSD_1			P215-14A	DSD1	28	AV AD 2	P217-2C	P215-2C	P213-2C	P211-2C	AV_AD_2
ASD_3			P215-12C	ASD 3	29	AV AD 1	P217-2B	P215-2B	P213-2B	P211-2B	AV_AD_1
ASD_1			P215-12A	ASD 1	30	AV AD 0	P217-2A	P215-2A	P213-2A	P211-2A	AV_AD_0

1 2 3

S MOTHER (P251, P263) SCHEMATIC DIAGRAM (12/14)

C

B

A

P251
HIROSE PCN13-96S-2.54DSA
S

FROM / TO					A		B	FROM / TO				
GND					GND (D)	1	GND (D)					GND
						2						
-AVDATA7				P218-19B	AV DATA 7	3						
+AVDATA7				P218-19A	AV DATA 7	4						
-AVDATA6				P218-18B	AV DATA 6	5	VCP RESET	P213-20B				VCPRESET
+AVDATA6				P218-18A	AV DATA 6	6	REC V SYNC	P213-18A	P212-16C			R_V_SYNC
-AVDATA5				P218-17B	AV DATA 5	7	REC COMP SYNC	P212-16B				R_C_SYNC
+AVDATA5				P218-17A	AV DATA 5	8	VITC GATE	P212-15C				VITCGATE
-AVDATA4				P218-16B	AV DATA 4	9	REC VITC	P212-15B				REC_VITC
+AVDATA4				P218-16A	AV DATA 4	10	REC CF	P213-19A	P212-15A			REC_CF
-AVDATA3				P218-15B	AV DATA 3	11	CHAR GATE	P212-12B				CHARGATE
+AVDATA3				P218-15A	AV DATA 3	12	CHAR SIG	P212-12A				CHAR_SIG
-AVDATA2				P218-14B	AV DATA 2	13	REC_H_SW	P210-11B	P208-11B			REC_H_SW
+AVDATA2				P218-14A	AV DATA 2	14	PB V SYNC	P212-14C				P_V_SYNC
-AVDATA1				P218-13B	AV DATA 1	15	PB COMP SYNC	P212-14B				P_C_SYNC
+AVDATA1				P218-13A	AV DATA 1	16	PB VITC	P212-14A				PB_VITC
-AVDATA0				P218-12B	AV DATA 0	17	SPI VD	P212-13B				SPI_VD
+AVDATA0				P218-12A	AV DATA 0	18	SPI HD	P212-13A				SPI_HD
-AV_CLK				P218-10B	AV CLK	19	CAP FGP	P216-9C	P214-9C	P210-9C		CAP_FGP
AV_CLK				P218-10A	AV CLK	20	CAP DIR	P216-8C	P214-8C	P210-8C		CAP_DIR
-AV_HO				P218-9B	AV HO	21	FSA	P216-8A				FSA
AV_HO				P218-9A	AV HO	22	FSD	P216-7B				FSD
AV_CF				P218-8A	AV CF	23	ST 3	P216-7A				ST_3
AV_FRM				P218-7A	AV FRM	24	ST 2	P216-6C				ST_2
AV_LALT				P218-6A	AV LALT	25	ST 1	P216-6B				ST_1
-AV_SC				P218-5B	AV SC	26	ST 0	P216-6A				ST_0
AV_SC				P218-5A	AV SC	27	WCK	P216-5B				WCK
-AV_CS				P218-4B	AV CS	28	BCK	P216-5A				BCK
AV_CS				P218-4A	AV CS	29	FS 128	P216-2B				FS_128
AV_VS				P218-3A	AV VS	30	PB RST (INIT)	P216-2A				PB_RST

P263
HIROSE PCN13-96S-2.54DSA
S

FROM / TO					A		B	FROM / TO				
TRANS_B1				P212-7A	TRANSMIT B1	1	TRANSMIT A1	P212-6A				TRANS_A1
RECIV_B1				P212-9A	RECEIVE B1	2	RECEIVE A1	P212-8A				RECIV_A1
GND					GND (D)	3	GND (D)					GND
RXD				P212-10B	RXD	4	TXD	P212-10A				TXD
CTS				P212-11A	CTS	5	RTS	P212-10C				RTS
DSR				P212-11B	DSR	6	DCD	P212-12C				DCD
						7	DTR	P212-11C				DTR
GND					GND (D)	8	GND (D)					GND
DAV				P212-20A	DAV	9	DIO 1	P212-17A				DIO_1
NRFD				P212-20B	NRFD	10	DIO 2	P212-17B				DIO_2
NDAC				P212-20C	NDAC	11	DIO 3	P212-17C				DIO_3
ATN				P212-21A	ATN	12	DIO 4	P212-18A				DIO_4
IFC				P212-21B	IFC	13	DIO 5	P212-18B				DIO_5
SRQ				P212-21C	SRQ	14	DIO 6	P212-18C				DIO_6
REN				P212-22A	REN	15	DIO 7	P212-19A				DIO_7
EOI				P212-22B	EOI	16	DIO 8	P212-19B				DIO_8
TRANS_B2				P212-7B	TRANSMIT B2	17	TRANSMIT A2	P212-6B				TRANS_A2
RECIV_B2				P212-9B	RECEIVE B2	18	RECEIVE A2	P212-8B				RECIV_A2
TRANS_B3				P212-7C	TRANSMIT B3	19	TRANSMIT A3	P212-6C				TRANS_A3
RECIV_B3				P212-9C	RECEIVE B3	20	RECEIVE A3	P212-8C				RECIV_A3

1 2 3

4—2—139

S MOTHER SCHEMATIC DIAGRAM (14/14)

C

B

A

P247		FROM / TO				
1	EJECT KEY	P214-18C				EJE_KEY
2	EJECT LAMP	P214-19C				EJE_LAMP
3	GND (D)					GND
4	AUTO OFF LAMP	P214-19B				A_O_LAMP
5	+5V (D)					+5V (D)

P248		FROM / TO				
1	-5V (D)	P035-1				-5V (D)
2	+5V (D)	P035-2				+5V (D)
3	GND (D)	P235-3				GND

P249		FROM / TO				
1	REC INPUT VIDEO	P218-21C				R_IN_V
2	REC INPUT VIDEO GND	P218-21B				R_IN_V_G
3	RF WFM	P204-1C	P202-1C			RF_WFM
4	RF WFM GND	P204-1A	P204-1B	P202-1A	P202-1B	RF_WFM_G
5	WF CTL	P210-14B				WF_CTL
6	WF CTL GND	P210-15B				WF_CTL_G
7	4FSC CLK	P212-16A				4FSC_CLK
8	4FSC CLK GND					GND

P253		FROM/TO				
1	-15V (un)					-15V (UN)
2	-8V (un)					-8V (UN)
3	GND (A)					GND
4	GND (A)					GND
5	+8V (un)					+8V (UN)
6	+15V (un)					+15V (UN)
7	+12V (A)					+12V (A)
8	-12V (A)					-12V (A)
9	+5V (A)					+5V (A)
10	-5V (A)					-5V (A)

P255		FROM / TO				
1	+12V (A)					+12V (A)
2	-12V (A)					-12V (A)
3	+5V (A)					+5V (A)
4	GND (A)					GND

P290		FROM / TO				
1	STRN_A	P207-19C				STRN_A
2	STRN_G	P207-19B				STRN_G
3	STRN_B	P207-19A				STRN_B
4	HV_MONI	P207-20C				HV_MONI
5	HV_ON	P207-21C				HV_ON
6	PAT_A	P207-20B				PAT_A
7	PAT_A_G	P207-20A				PAT_A_G
8	PAT_B	P207-21B				PAT_B
9	PAT_B_G	P207-21A				PAT_B_G

P256		FROM / TO				
1	SER H SW	P210-18A	P214-19A	P201-23B		SER_H_SW
2	SER H SW GND	P201-24B	P210-18B			SERHSW_G
3	TEST MODE	P214-21B	P202-24A			TESTMODE
4	REC MODE	P214-20A	P202-22A			REC_MODE

P257		FROM / TO				
1	+24V (un)					+24V (UN)
2						
3	GND (un)					GND (UN)

P258		FROM / TO				
1	+12V (A)					+12V (A)
2	-12V (A)					-12V (A)
3	GND (A)					GND

P259		FROM / TO				
1	GND (A)					GND
2	+12V (A)					+12V (A)
3	-12V (A)					-12V (A)
4	GND (A)					GND
5	+8V (un)					+8V (UN)
6	-8V (un)					-8V (UN)
7	+15V (un)					+15V (UN)
8	-15V (un)					-15V (UN)

P260		FROM / TO					
1	SYS AB 0	P213-9B	P241-4A	P211-9B			SYS_AB_0
2	SYS AB 1	P213-10B	P241-5A	P211-10B			SYS_AB_1
3	SYS AB 2	P213-11B	P241-6A	P211-11B			SYS_AB_2
4	SYS AB 3	P213-12B	P241-7A	P211-12B			SYS_AB_3
5	SYS AB 4	P213-13B	P241-8A	P211-13B			SYS_AB_4
6	SYS AB 5	P213-14B	P241-9A	P211-14B			SYS_AB_5
7	SYS AB 6	P213-15B	P241-10A	P211-15B			SYS_AB_6
8	SYS AB 7	P213-16B	P241-11A	P211-16B			SYS_AB_7
9	SYS RESET	P213-9C	P241-12B	P211-9C	P233-10A	P205-9C	SYS_RST
10	SYS IORD	P213-10C	P241-12A	P211-10C			SYS_IORD
11	SYS IOWR	P213-11C	P241-13A	P211-11C			SYS_IOWR

P261		FROM / TO				
1	SYS DB 0	P213-9A	P241-4B	P211-9A		SYS_DB_0
2	SYS DB 1	P213-10A	P241-5B	P211-10A		SYS_DB_1
3	SYS DB 2	P213-11A	P241-6B	P211-11A		SYS_DB_2
4	SYS DB 3	P213-12A	P241-7B	P211-12A		SYS_DB_3
5	SYS DB 4	P213-13A	P241-8B	P211-13A		SYS_DB_4
6	SYS DB 5	P213-14A	P241-9B	P211-14A		SYS_DB_5
7	SYS DB 6	P213-15A	P241-10B	P211-15A		SYS_DB_6
8	SYS DB 7	P213-16A	P241-11B	P211-16A		SYS_DB_7

P268		FROM / TO				
1	DIF CK	P216-2C				DIF_CK
2	$\overline{\text{DIF CK}}$	P216-3C				-DIF_CK
3	DIF CK GND					GND
4	DBCK	P216-4A				DBCK
5	$\overline{\text{DBCK}}$	P216-4B				-DBCK
6	DB CK GND					GND

P269		FROM / TO				
1	DAI 1A	P216-18A				DAI_1A
2	DAI 1B	P216-18B				DAI_1B
3	DAI 1 GND	P216-18C				DAI_1_G
4	DAI 2A	P216-19A				DAI_2A
5	DAI 2B	P216-19B				DAI_2B
6	DAI 2 GND	P216-19C				DAI_2_G
7	DAO 1A	P216-20A				DAO_1A
8	DAO 1B	P216-20B				DAO_1B
9	DAO 1 GND	P216-20C				DAO_1_G
10	DAO 2A	P216-21A				DAO_2A
11	DAO 2B	P216-21B				DAO_2B
12	DAO 2 GND	P216-21C				DAO_2_G

P270		FROM / TO				
1	VA CNT 1A	P216-22A				VACNT1A
2	VA CNT 1B	P216-22B				VACNT1B
3	VA CNT 1 GND	P216-22C				VACNT1G
4	VA CNT 2A	P216-23A				VACNT2A
5	VA CNT 2B	P216-23B				VACNT2B
6	VA CNT 2 GND	P216-23C				VACNT2G

P272		FROM / TO				
1	+15V (A)					+15V (UN)
2	-15V (A)					-15V (UN)
3	+12V (A)					+12V (A)
4	-12V (A)					-12V (A)
5	+5V (A)					+5V (A)
6	-5V (A)					-5V (A)
7	GND (A)					GND

P277		FROM / TO				
1	-5V (A)					-5V (A)
2	+5V (A)					+5V (A)
3	GND (A)					GND

P278		FROM / TO				
1	+15V (un)					+15V (UN)
2						
3	GND (un)					GND

P502		FROM / TO				
1	REC DATA CH0	P201-13A				+REC_DA0
2	$\overline{\text{REC DATA CH0}}$	P201-13C				-REC_DA0
3	REC DATA CH0 GND	P201-14A	P201-12C			GND
4	REC DATA CH1	P201-15A				+REC_DA1
5	$\overline{\text{REC DATA CH1}}$	P201-15C				-REC_DA1
6	REC DATA CH1 GND	P201-16A	P201-14C			GND
7	REC CLK	P201-17A				+REC_CLK
8	$\overline{\text{REC CLK}}$	P201-17C				-REC_CLK
9	REC CLK GND	P201-18A	P201-16C			GND
10	FRY ERASE	P201-20C				FRYERASE
11	TEST EE2	P201-20A	P245-2B	P203-20A		TEST_EE2

P503		FROM / TO				
1	CH0 REC	P201-19C				CH0_REC
2						
3	CH1 REC	P201-19A				CH1_REC

1 2 3 4 5

4—2—141

M1 DRIVE SCHEMATIC DIAGRAM (1/4)

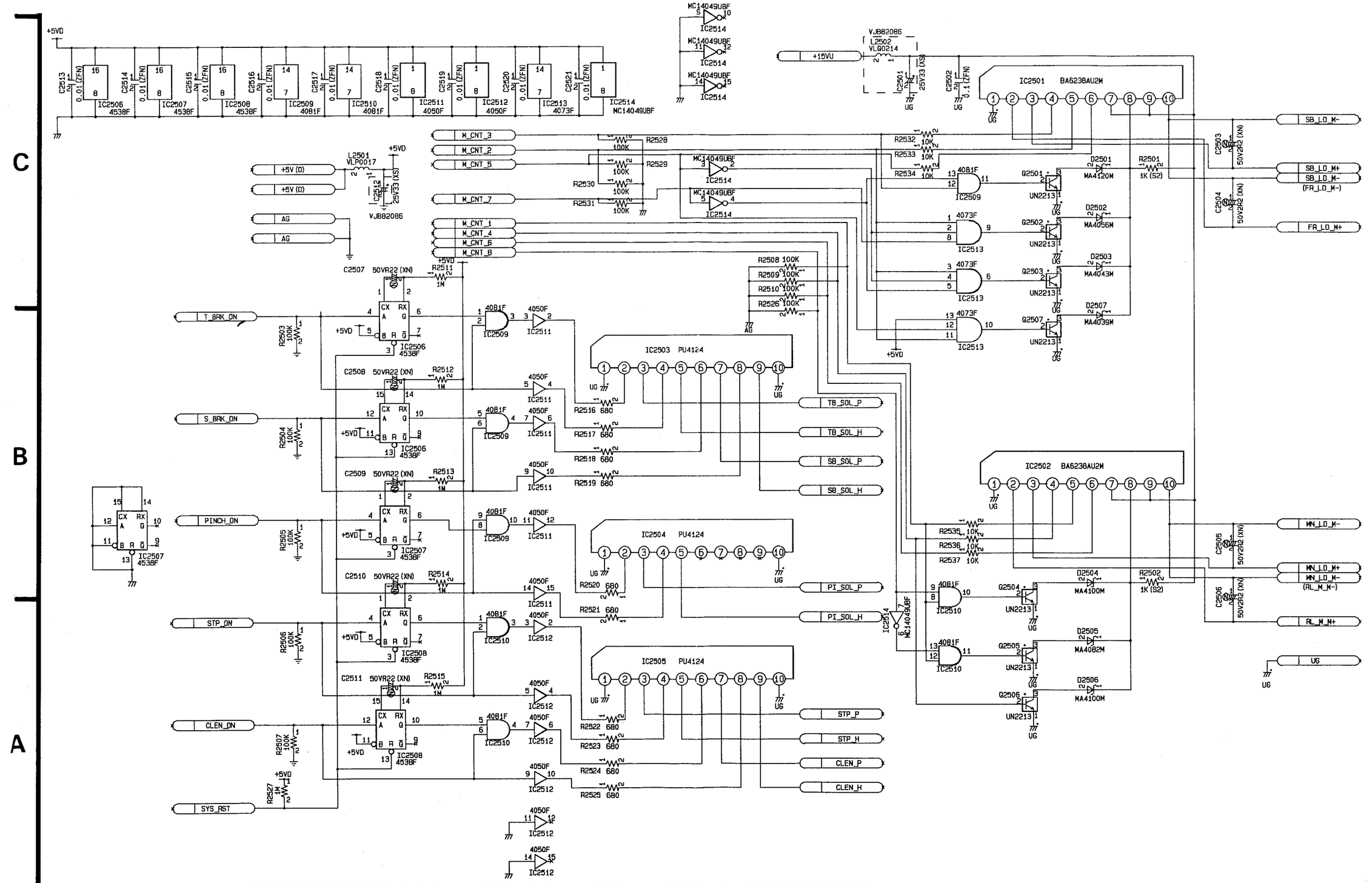

4—2—142

M1 DRIVE (DRUM/CAP) SCHEMATIC DIAGRAM (2/4)

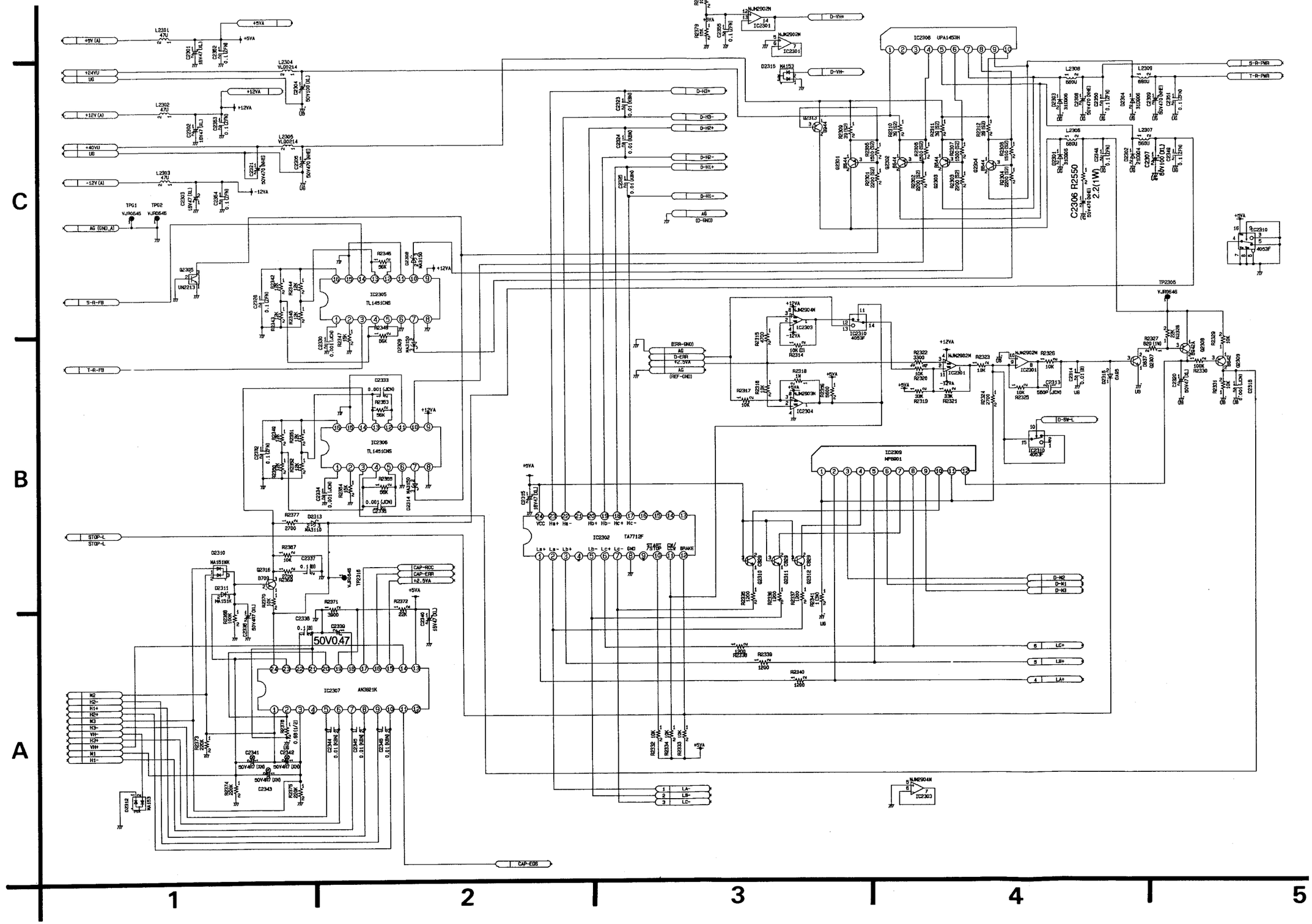

4—2—143

M1 DRIVE (REEL) SCHEMATIC DIAGRAM (3/4)

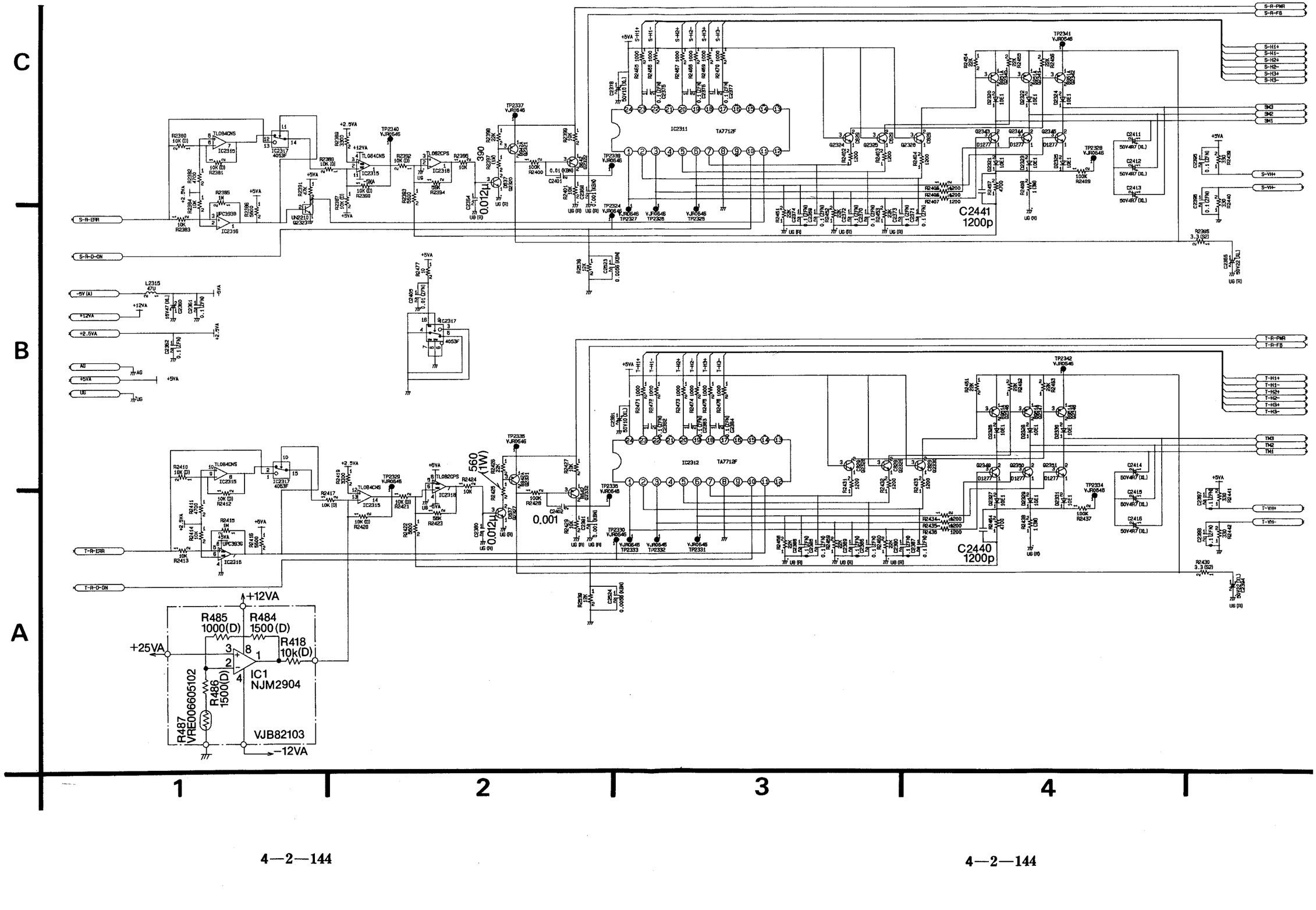

4—2—144

4—2—144

NTSC

M1 WAVEFORMS NTSC

TP2305 PLAY
2V/5msec. div.

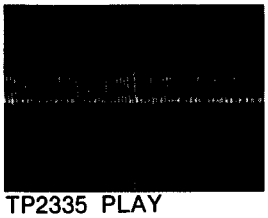

TP2335 PLAY
(TP2337, TP2339, TP2340)
100mV/5msec. div.

TP2316 PLAY
200mV/200µsec. div.

TP2336 PLAY
100mV/5msec. div.

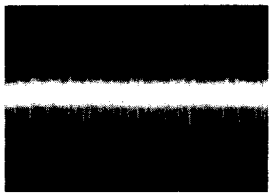

TP2324 PLAY
50mV/500µsec. div.

TP2341 PLAY
50mV/2msec. div.

TP2325 PLAY
(TP2326, TP2327, TP2331 – TP2333)
2V/50msec. div.

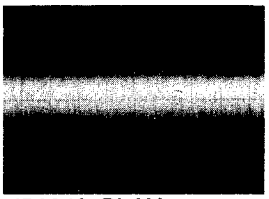

TP2342 PLAY
20mV/1msec. div.

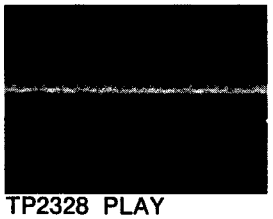

TP2328 PLAY
(TP2329, TP2330)
100mV/1msec. div.

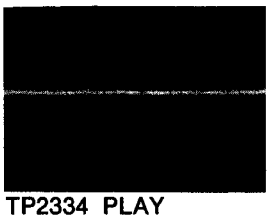

TP2334 PLAY
100mV/200µsec. div.

M1 DRIVE (CONNECTOR) SCHEMATIC DIAGRAM (4/4)

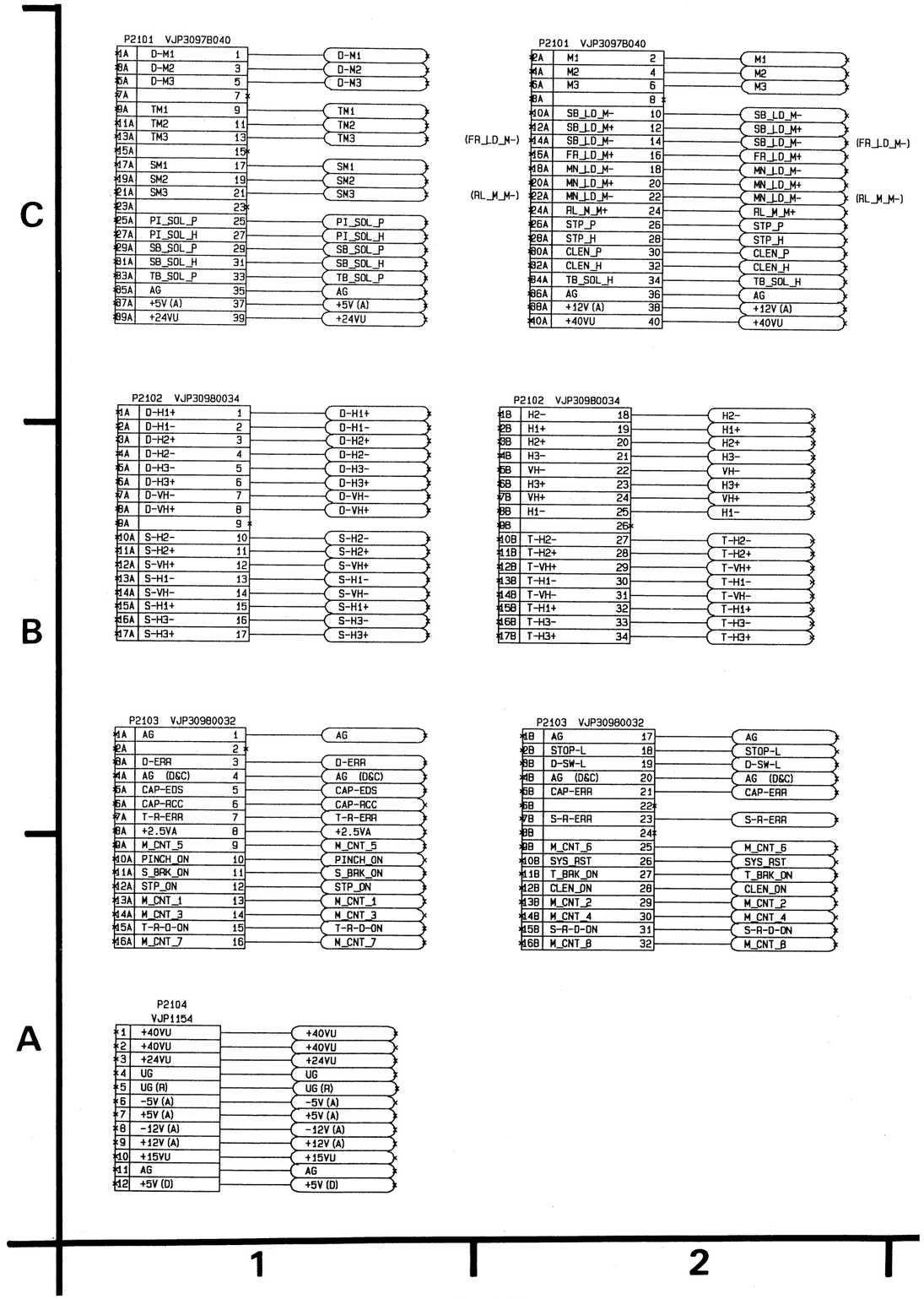

M1 DRIVE SUB SCHEMATIC DIAGRAM

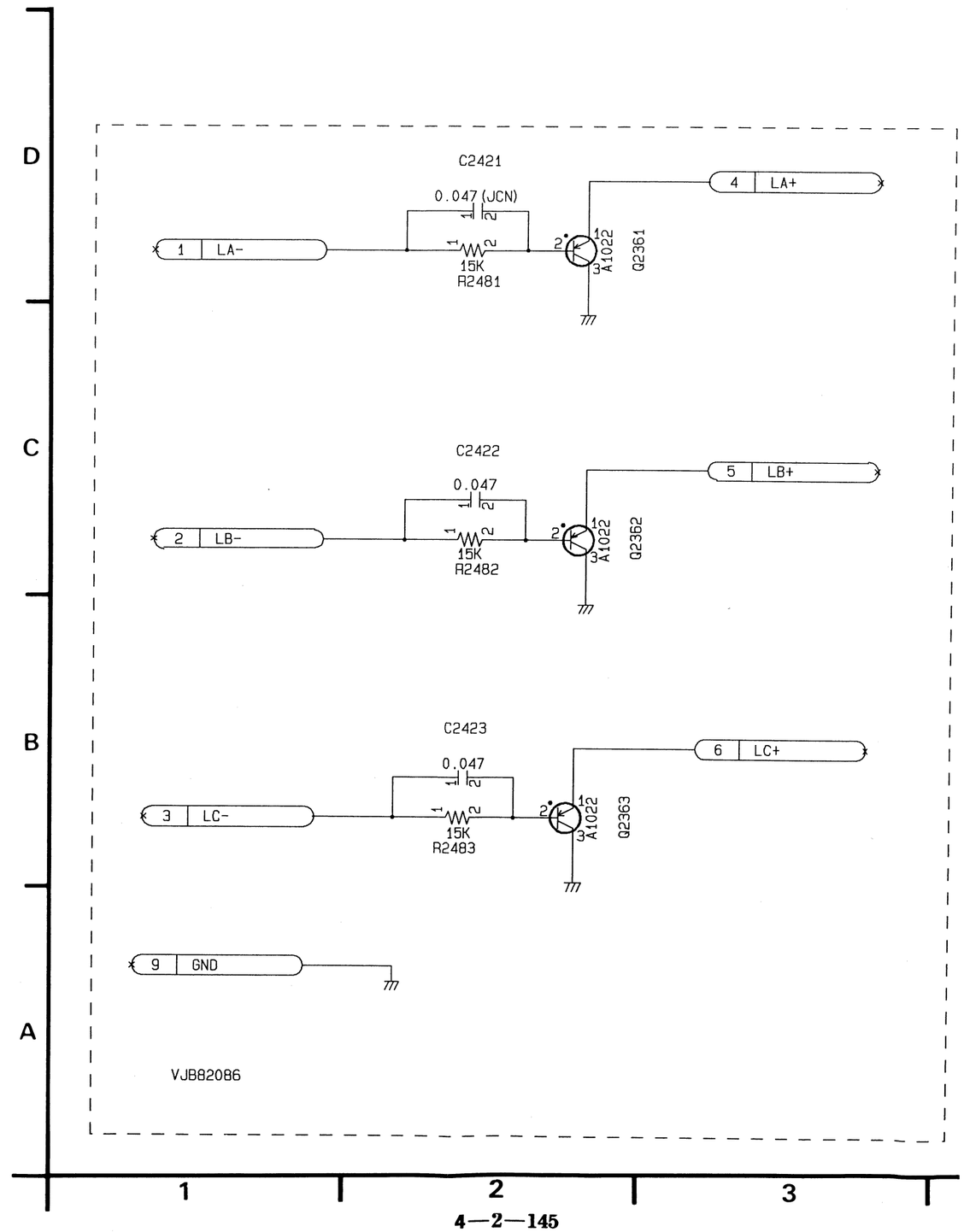

REC AMP SCHEMATIC DIAGRAM (1/7)

C

B

A

P501 VJP1234T

P272-1	1	+15V		4	+15V
	2	NC			
	3	NC			
P272-4	4	-12V		4	-12V
P272-5	5	+5V		2	+5V
P272-6	6	-5V		2	-5V
P272-7	7	GND			GND

P502 VJP1511T

P018-3	1	REC_DATA_CH0		2	REC_DA0+
P018-4	2	REC_DATA_CH0_L		2	REC_DA0-
P018-5	3	REC_DATA_GND			GND
P018-6	4	REC_DATA_CH1		2	REC_DA1+
P018-7	5	REC_DATA_CH1_L		2	REC_DA1-
P018-8	6	REC_DATA_GND			GND
P018-9	7	REC_CLK		2	REC_CLK+
P018-10	8	REC_CLK_L		2	REC_CLK-
P018-11	9	REC_CLK_GND			GND
P018-12	10	FLY_ERASE		3	FE_L
P018-13	11	TEST_EE2		2	TEST_EE2

P503 VJP1230T

P018-1	1	CH0 REC		5	CH0_REC
P018-2	2	GND			GND
P018-3	3	CH1 REC		6	CH1_REC

P504 VJP1233G

DRUM	1	REC CH0 A		5	REC_0_A+
DRUM	2	$\overline{\text{REC CH0 A}}$		5	REC_0_A-
DRUM	3	GND		5	GND
DRUM	4	REC CH0 B		5	REC_0_B+
DRUM	5	$\overline{\text{REC CH0 B}}$		5	REC_0_B-
DRUM	6	GND		5	GND

P511 VJP1233R

DRUM	1	REC CH1 A		6	REC_1_A+
DRUM	2	$\overline{\text{REC CH1 A}}$		6	REC_1_A-
DRUM	3	GND		6	GND
DRUM	4	REC CH1 B		6	REC_1_B+
DRUM	5	$\overline{\text{REC CH1 B}}$		6	REC_1_B-
DRUM	6	GND		6	GND

VJP1231T P505

SER_HSW	3			SER H SW	1 P256-1
GND				SER H GND	2 P256-2
TEST_MOD	2			TEST MODE	3 P256-3
REC_MODE	5			REC MODE	4 P256-4

VJP1231T P506

ENV_CH0	7			REC ENV CH0	1 P235-1
GND	7			GND	2 P235-2
ENV_CH1	7			REC ENV CH1	3 P235-3
GND	7			GND	4 P235-4

VJP1230T P507

REC_CUR0	5			REC CURR CH0	1 P240-1
REC_CUR1	6			REC CURR CH1	2 P240-2
GND				GND	3 P240-3

VJP1233T P508

E-ECH0+	2			EE_CH0_DATA	1 P219-1
E-ECH0-	2			EE_CH0_DATA_L	2 P219-2
GND				EE_CH0_DATA_GND	3 P219-3
E-ECH1+	2			EE_CH1_DATA	4 P224-1
E-ECH1-	2			EE_CH1_DATA_L	5 P224-2
GND				EE_CH1_DATA_GND	6 P224-3

VJP1230T P509

AT_HSW0	3			HSW0	1 P219-4
					2
AT_HSW1	3			HSW1	3 P224-4

VJP1230T P510

FE_A	3			FE A	1 P526-1
FE_B	3			FE B	2 P526-2
GND				GND	3 P526-3

1 2 3 4

4—2—146

REC AMP SCHEMATIC DIAGRAM (2/7)

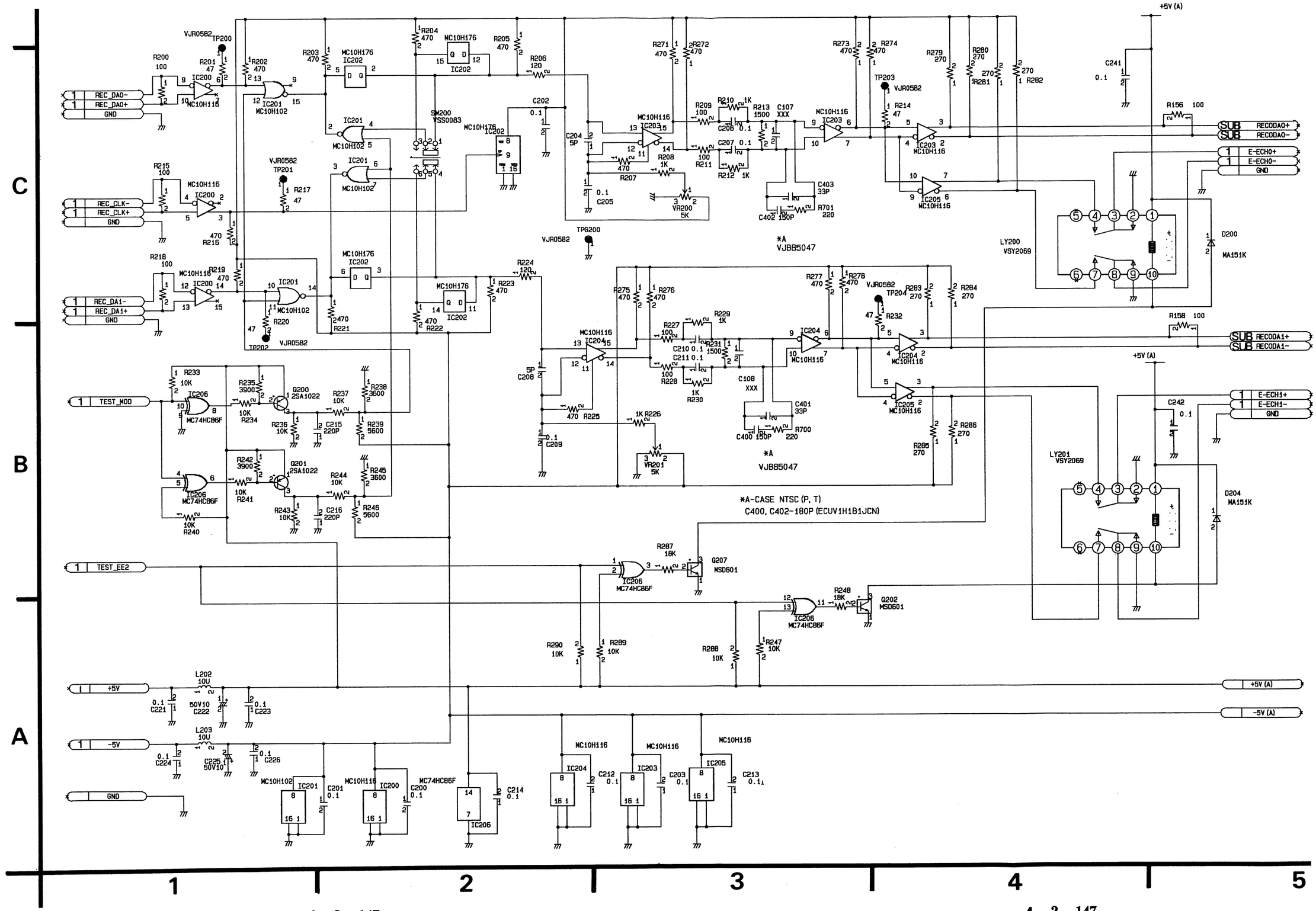

4—2—147

REC AMP SCHEMATIC DIAGRAM (3/7)

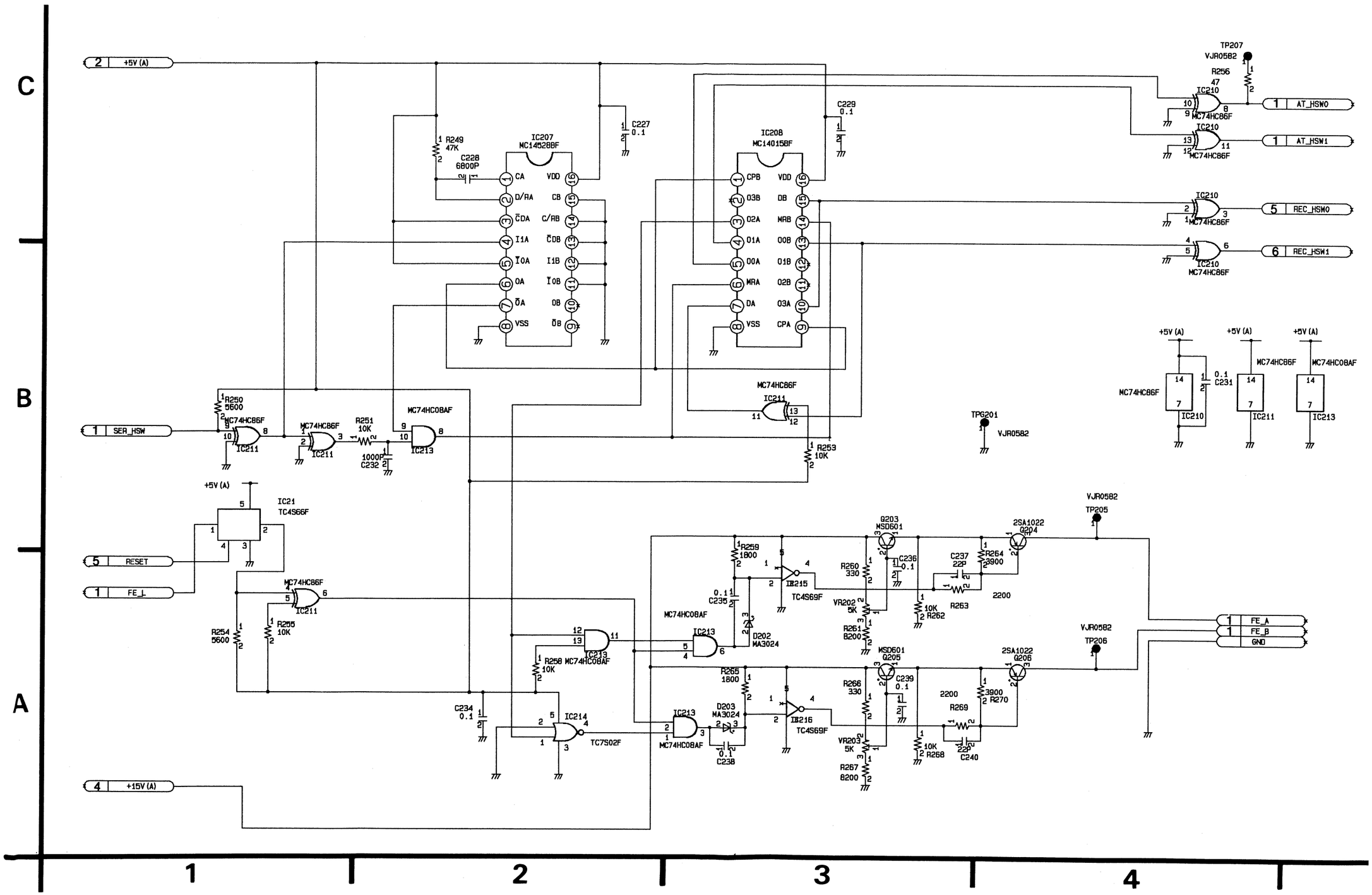

4—2—148

REC AMP SUB SCHEMATIC DIAGRAM

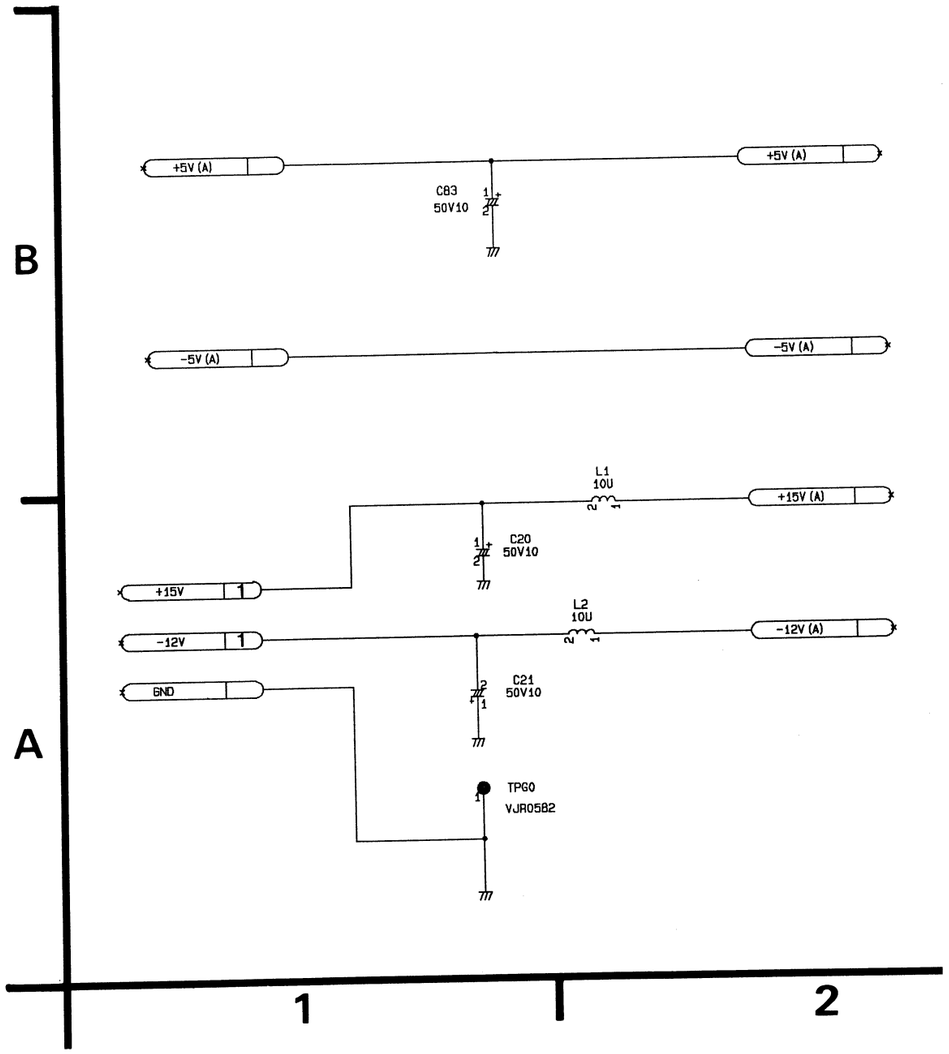

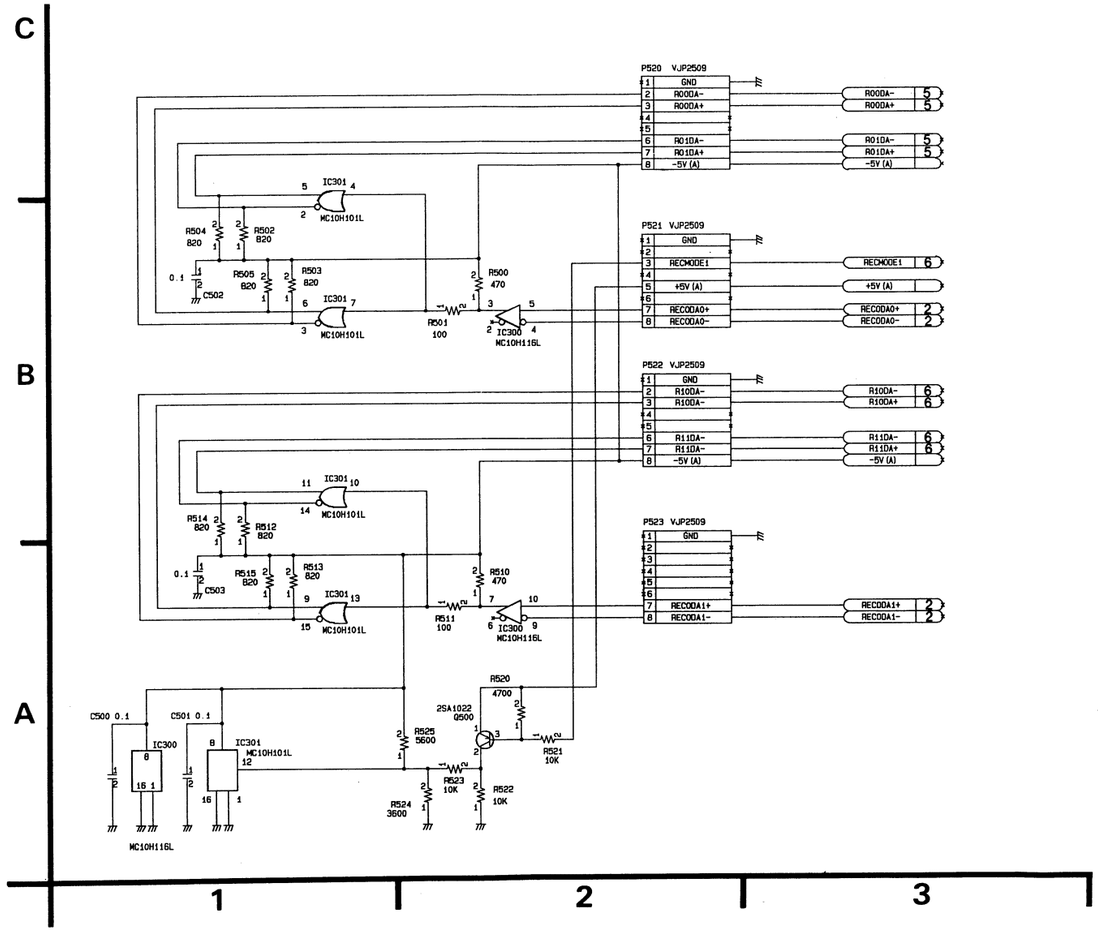

REC AMP SCHEMATIC DIAGRAM (5/7)

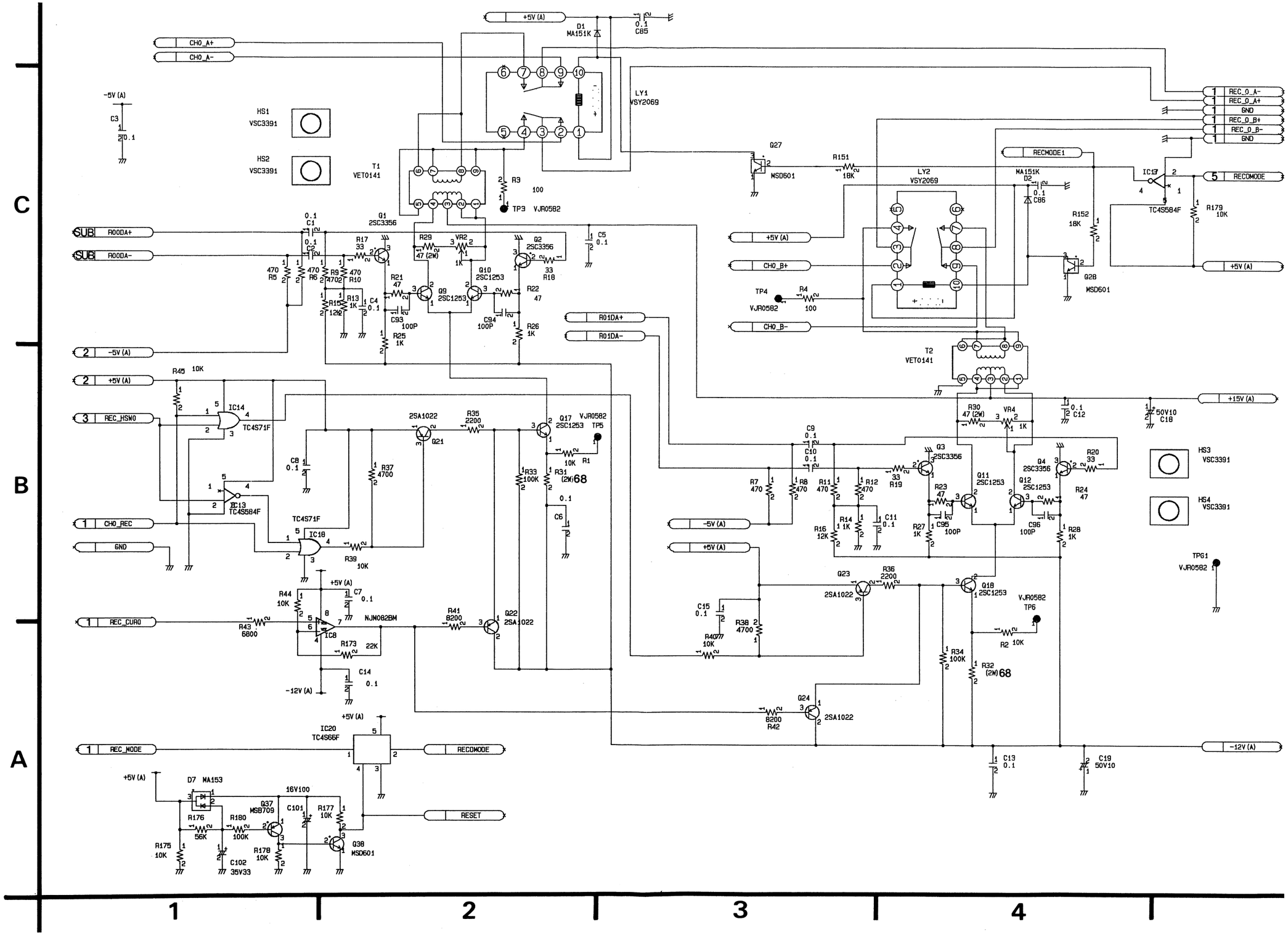

C B A

1 2 3 4

4—2—150

REC AMP SCHEMATIC DIAGRAM (6/7)

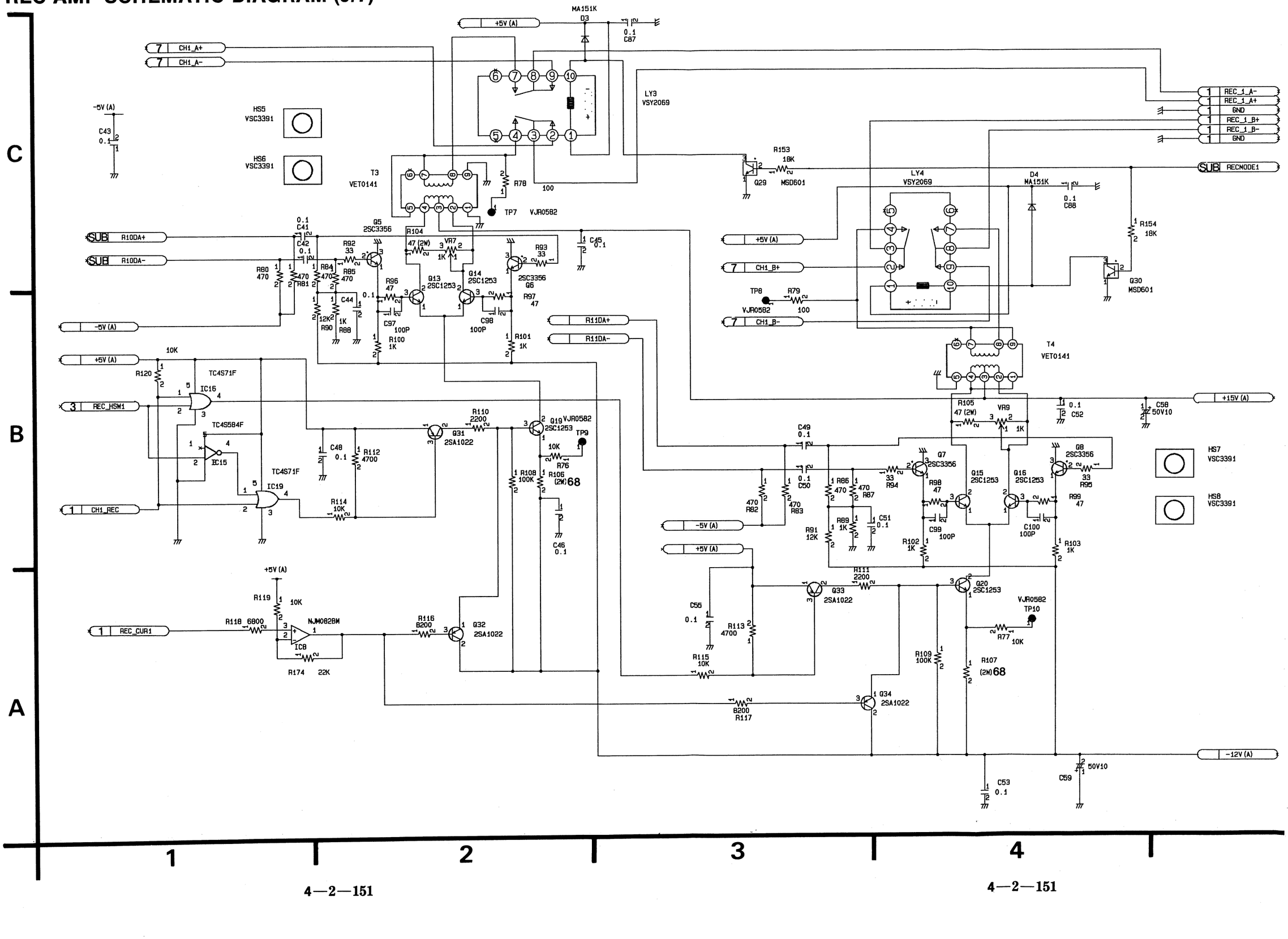

4—2—151

REC AMP SCHEMATIC DIAGRAM (7/7)

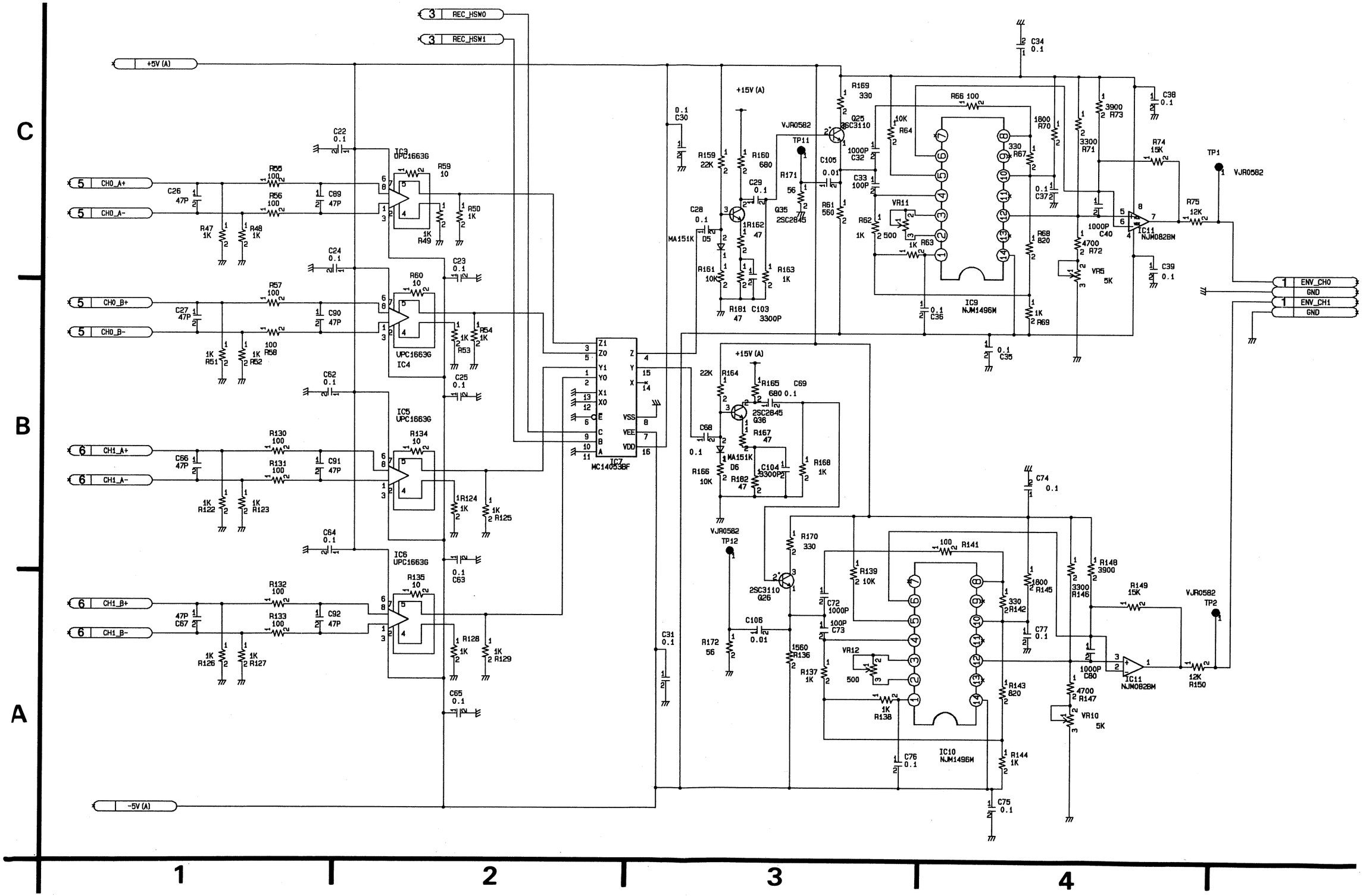

4—2—152

BUFFER AMP SCHEMATIC DIAGRAM

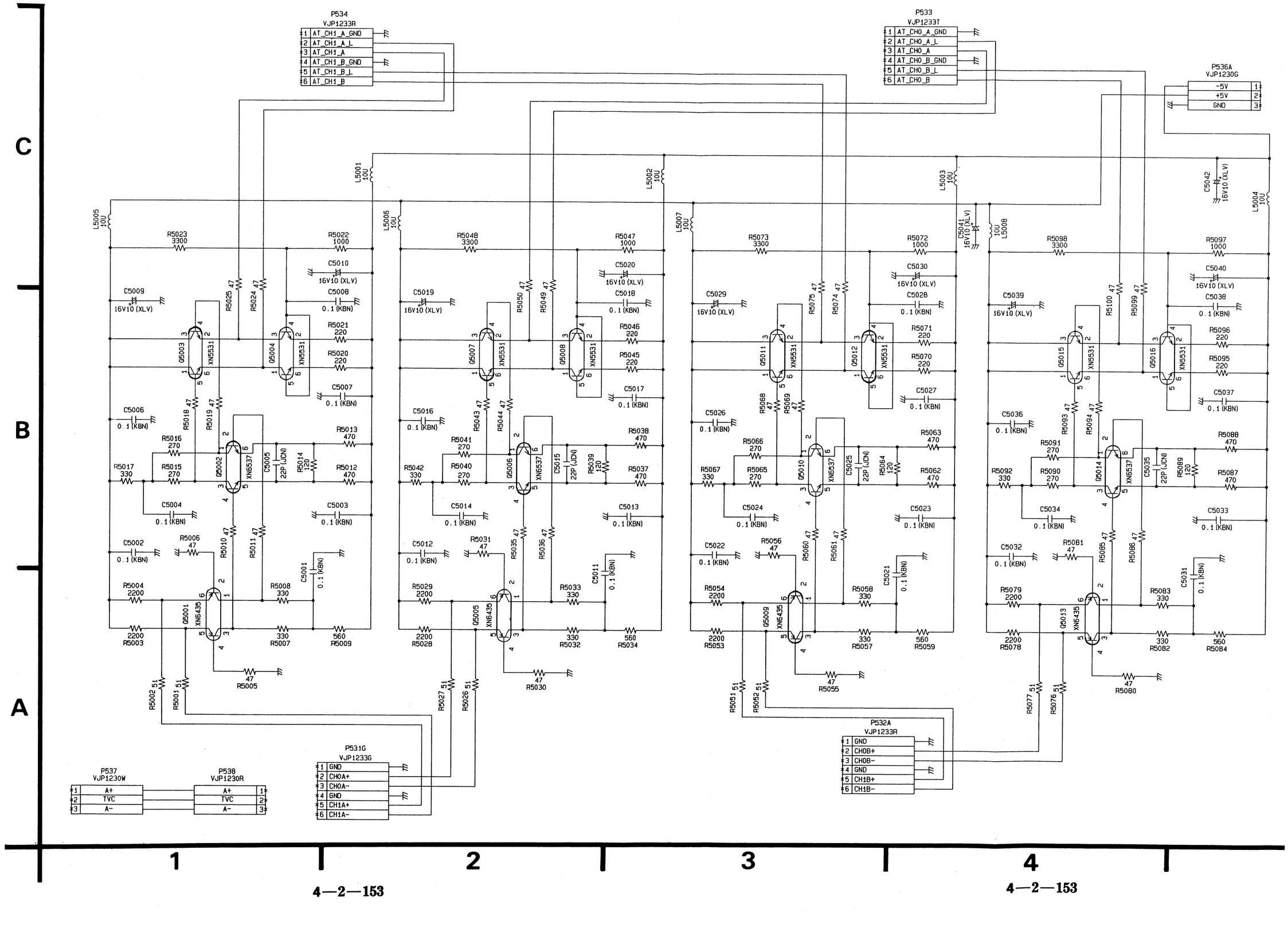

4—2—153

HEAD AMP SCHEMATIC DIAGRAM

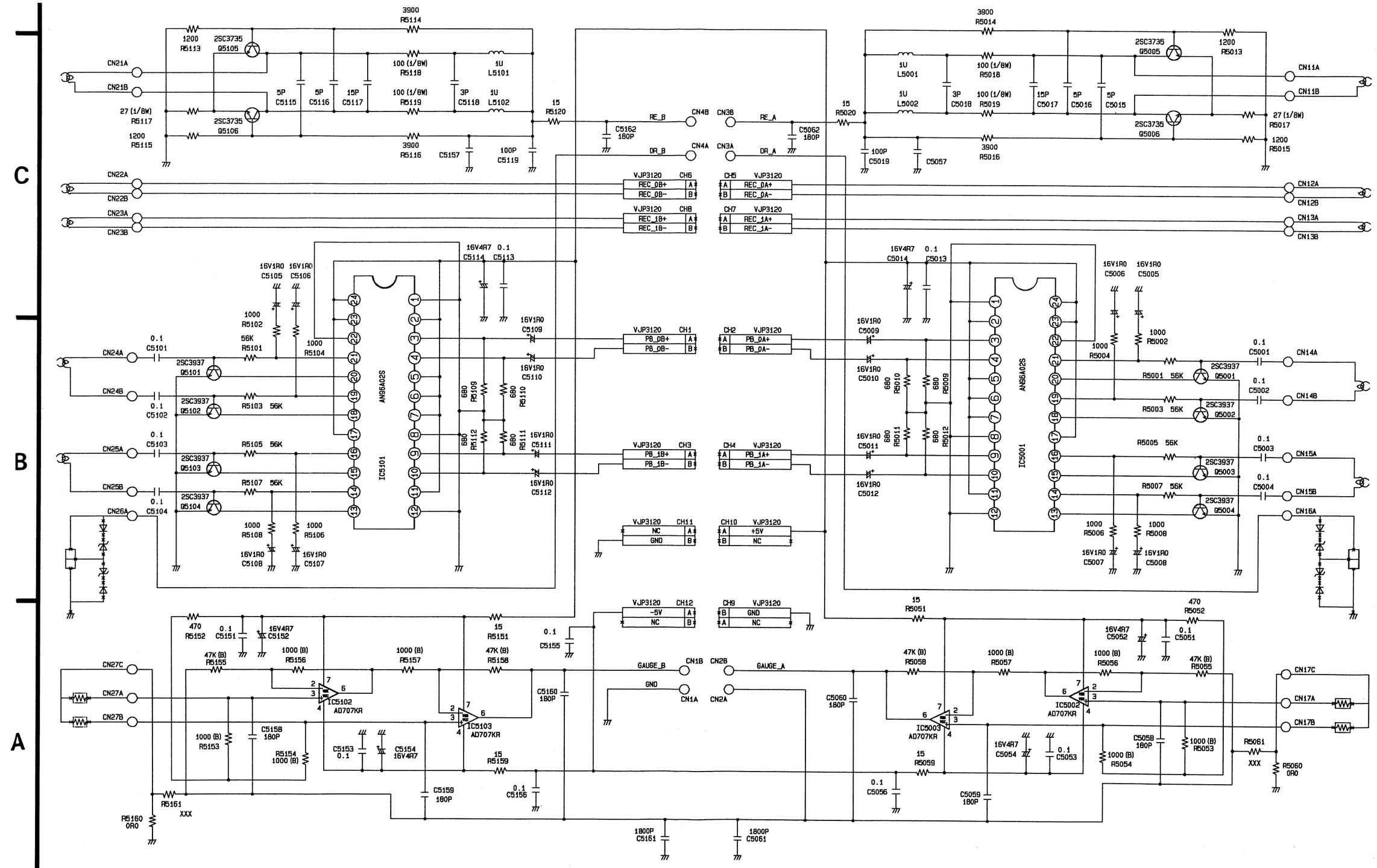

4—2—154

HA POWER SCHEMATIC DIAGRAM

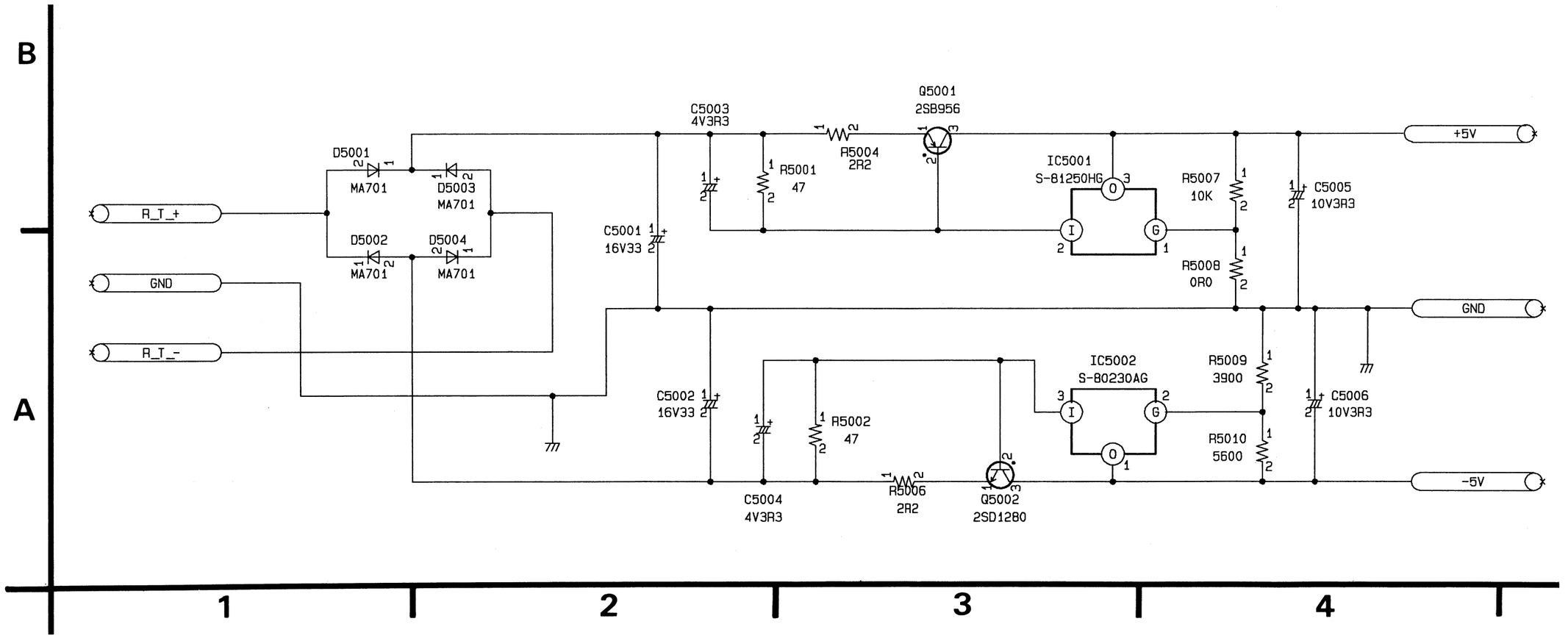

4—2—155

HA REGULATOR SCHEMATIC DIAGRAM

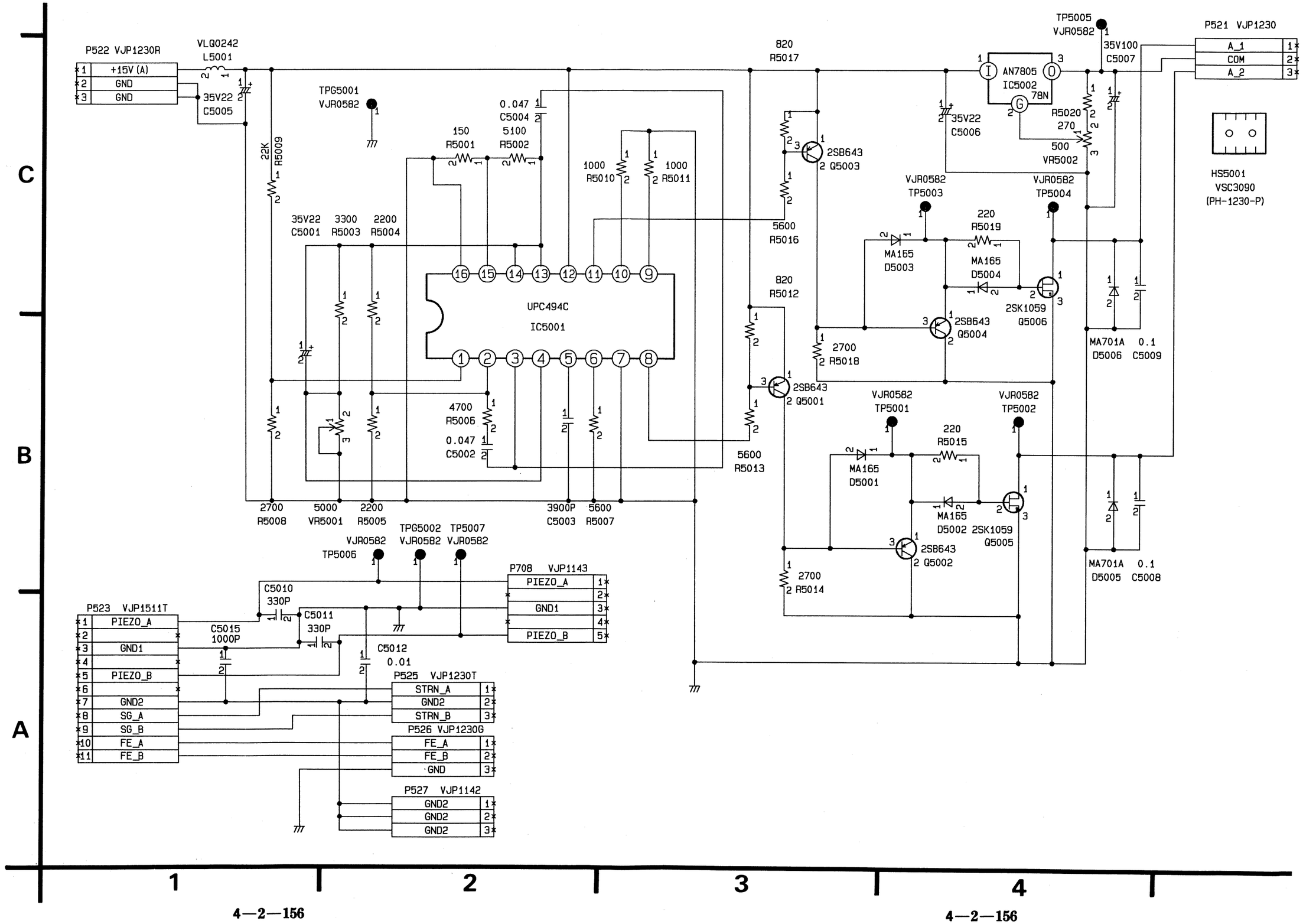

4—2—156

POWER SUPPLY 1 SCHEMATIC DIAGRAM (1/2)

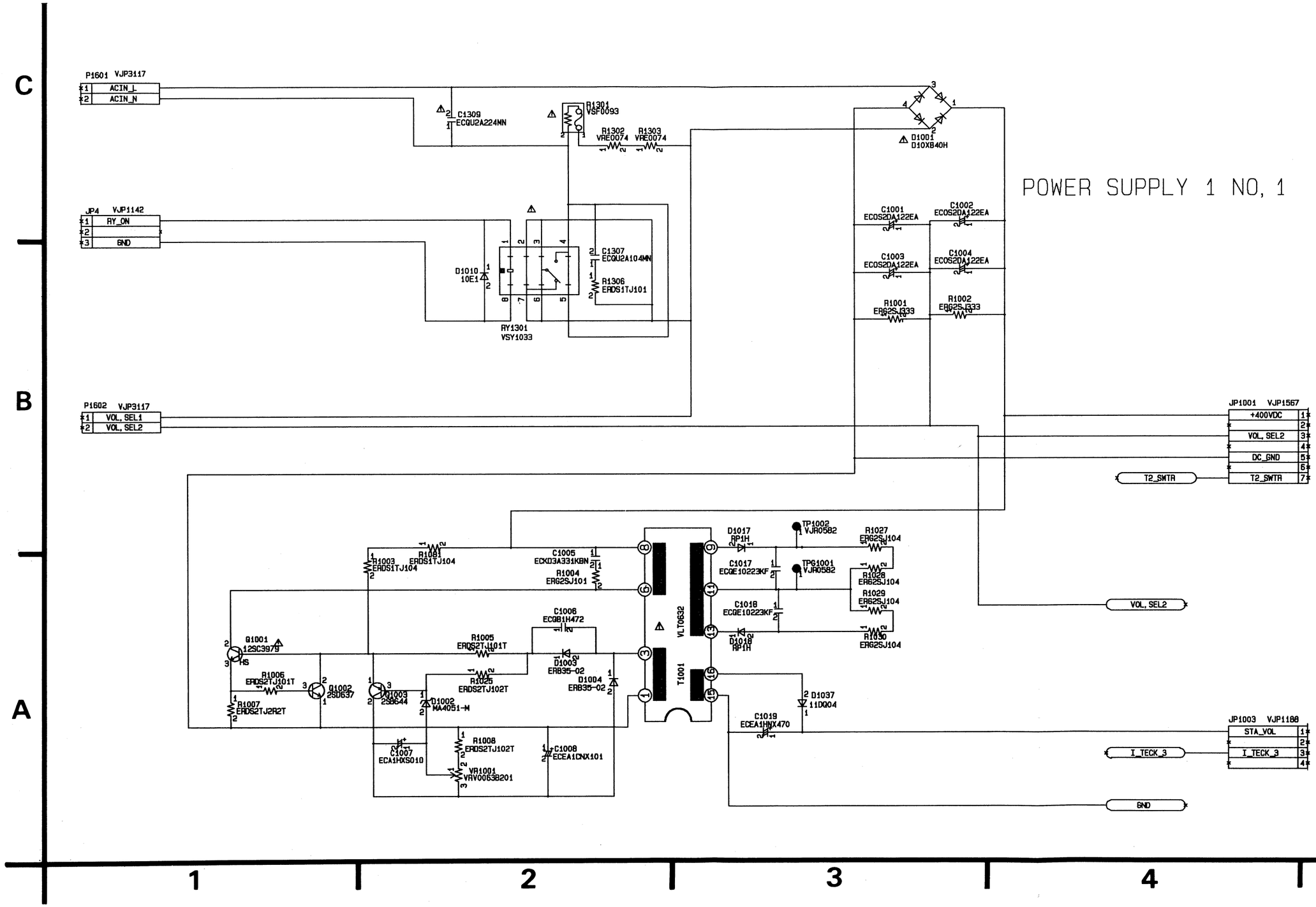

4—2—157

POWER SUPPLY 1 SCHEMATIC DIAGRAM (2/2)

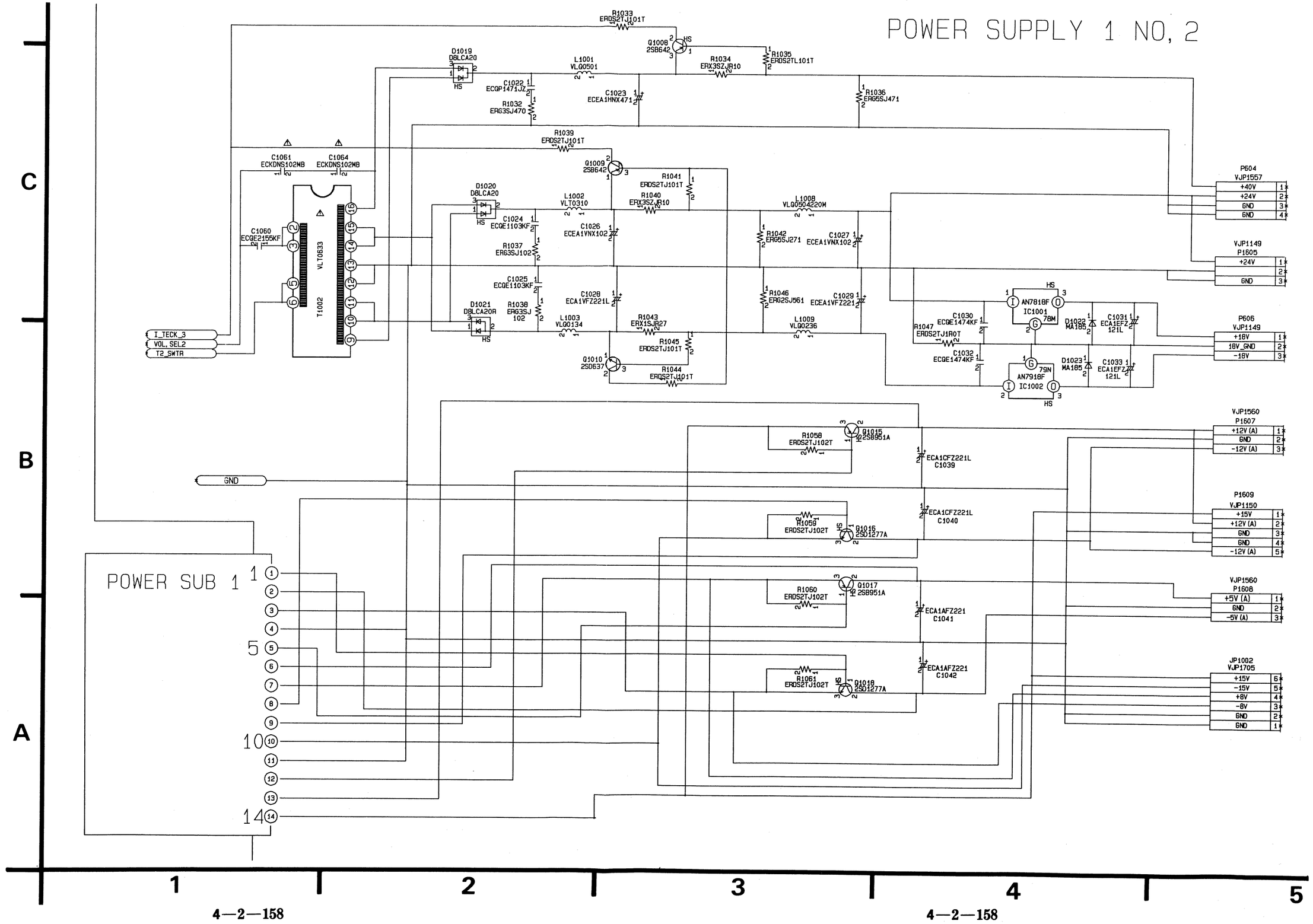

4—2—158

POWER SUPPLY SUB1 SCHEMATIC DIAGRAM

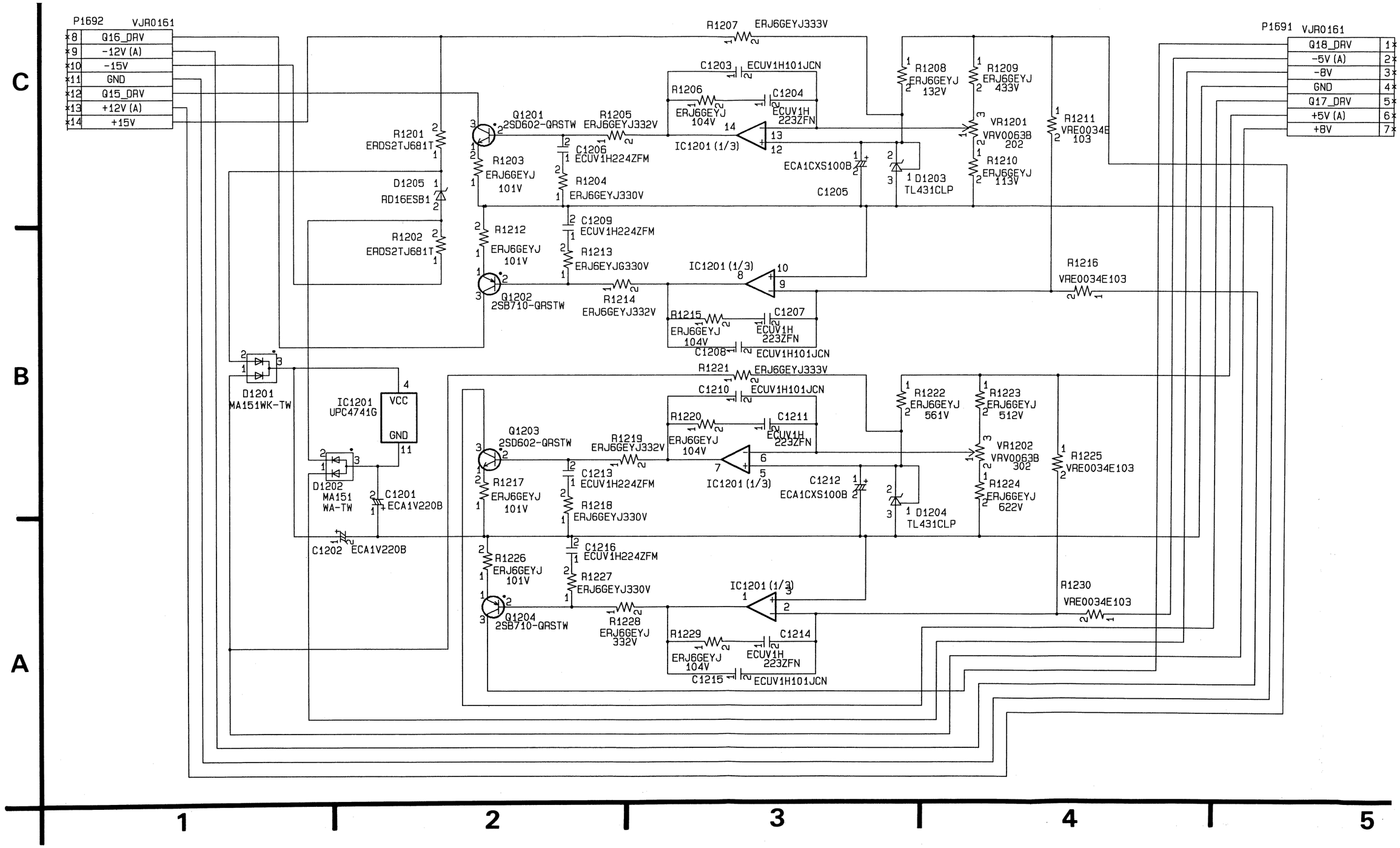

4—2—159

POWER SUPPLY 2 SCHEMATIC DIAGRAM (1/2)

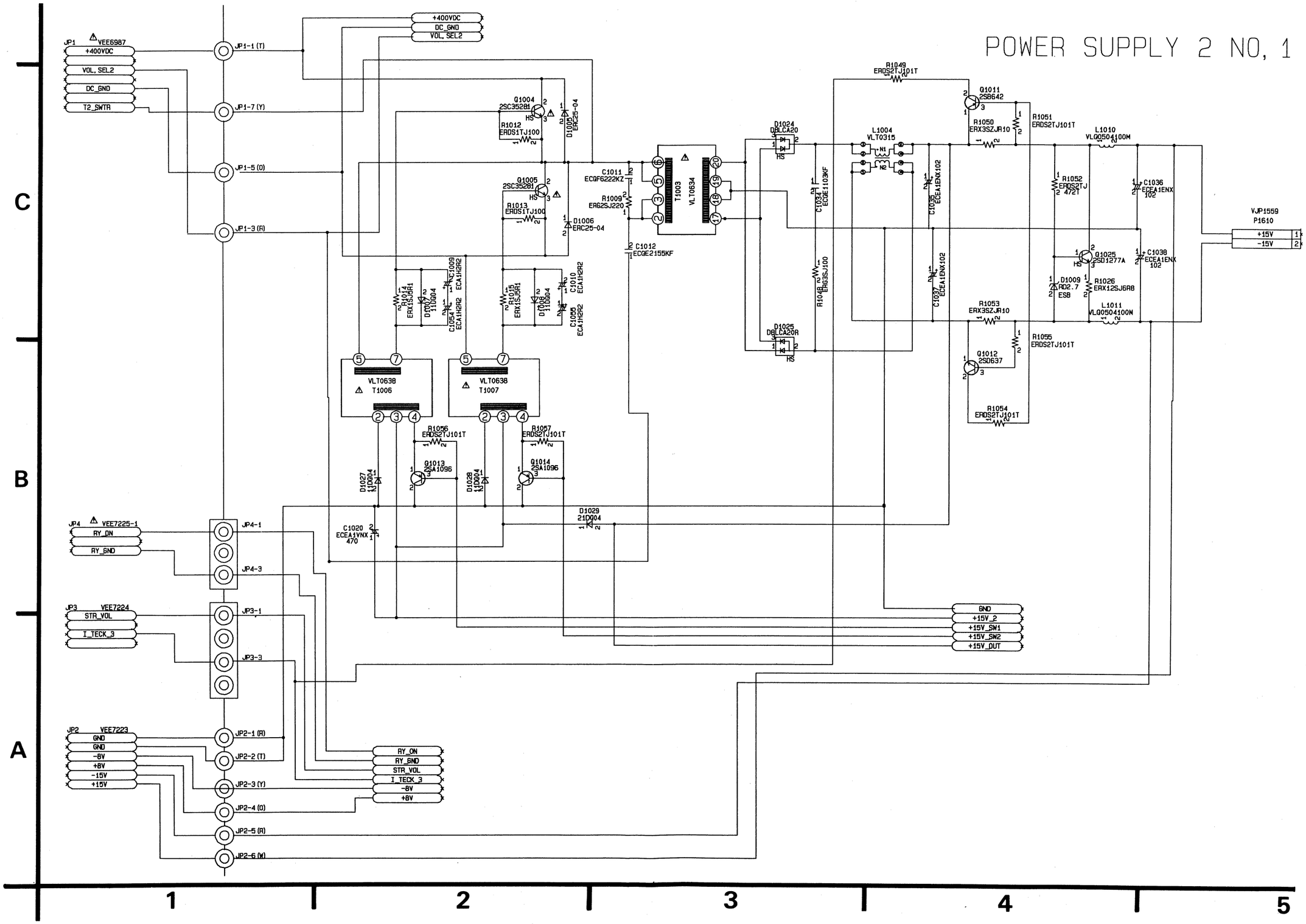

4—2—160

POWER SUPPLY 2 SCHEMATIC DIAGRAM (2/2)

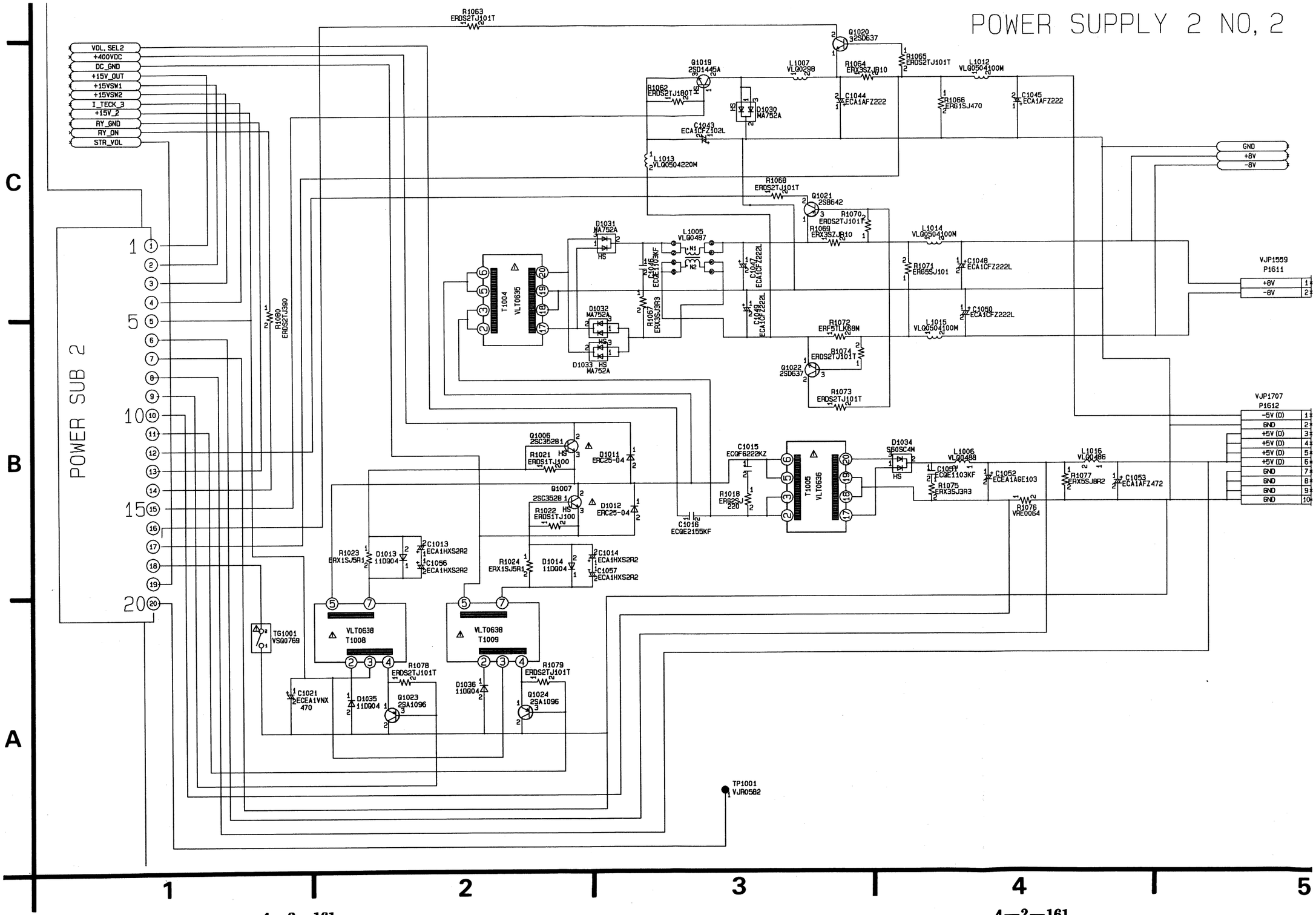

4—2—161

POWER SUPPLY SUB2 SCHEMATIC DIAGRAM

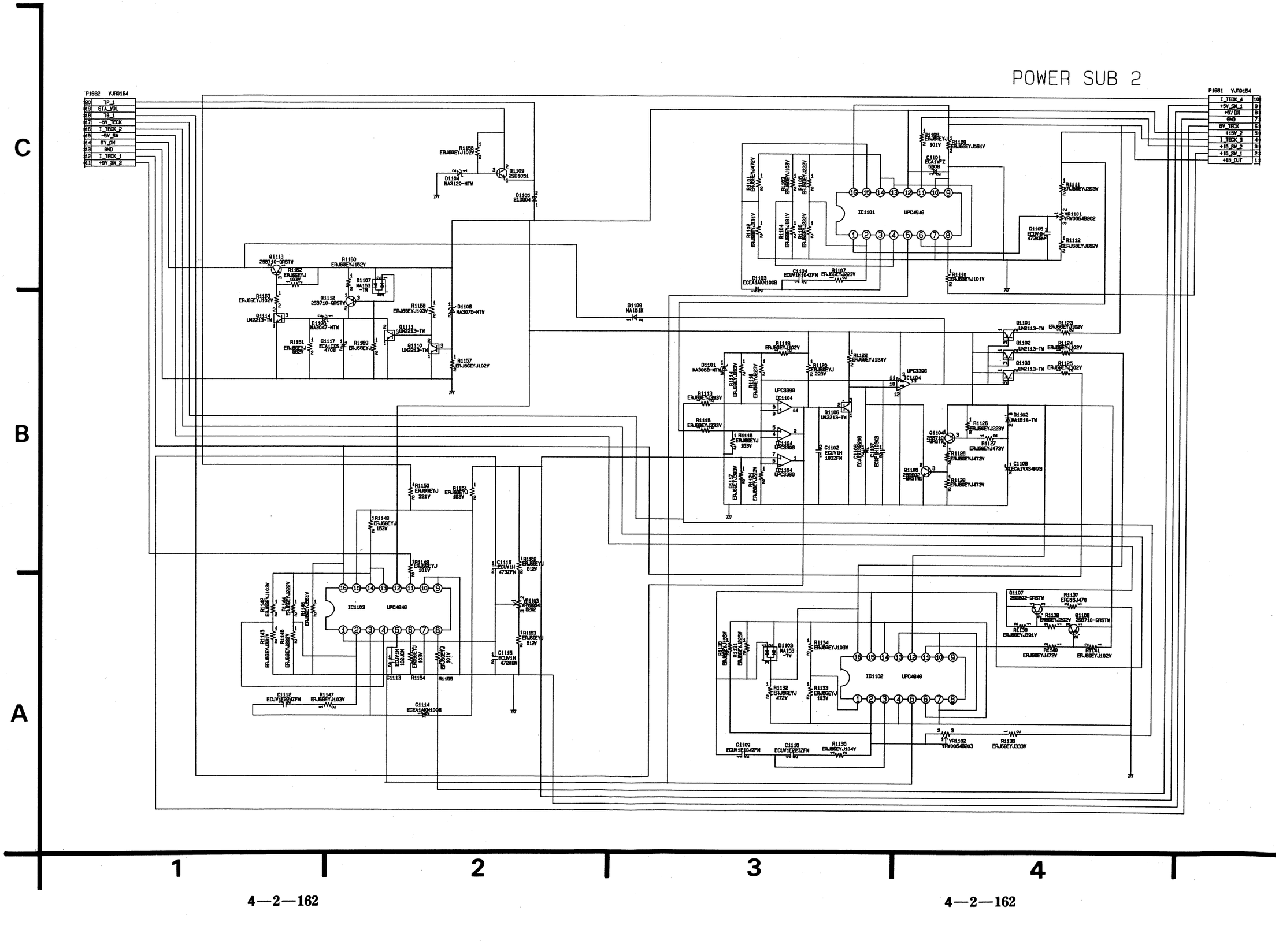

4—2—162

4—2—162

POWER SUPPLY SUB3 SCHEMATIC DIAGRAM

POWER SUB3 P.C.B.

REF. NO.	NTSC	PAL
FU1001	VSF0087	XBA2C63TB0

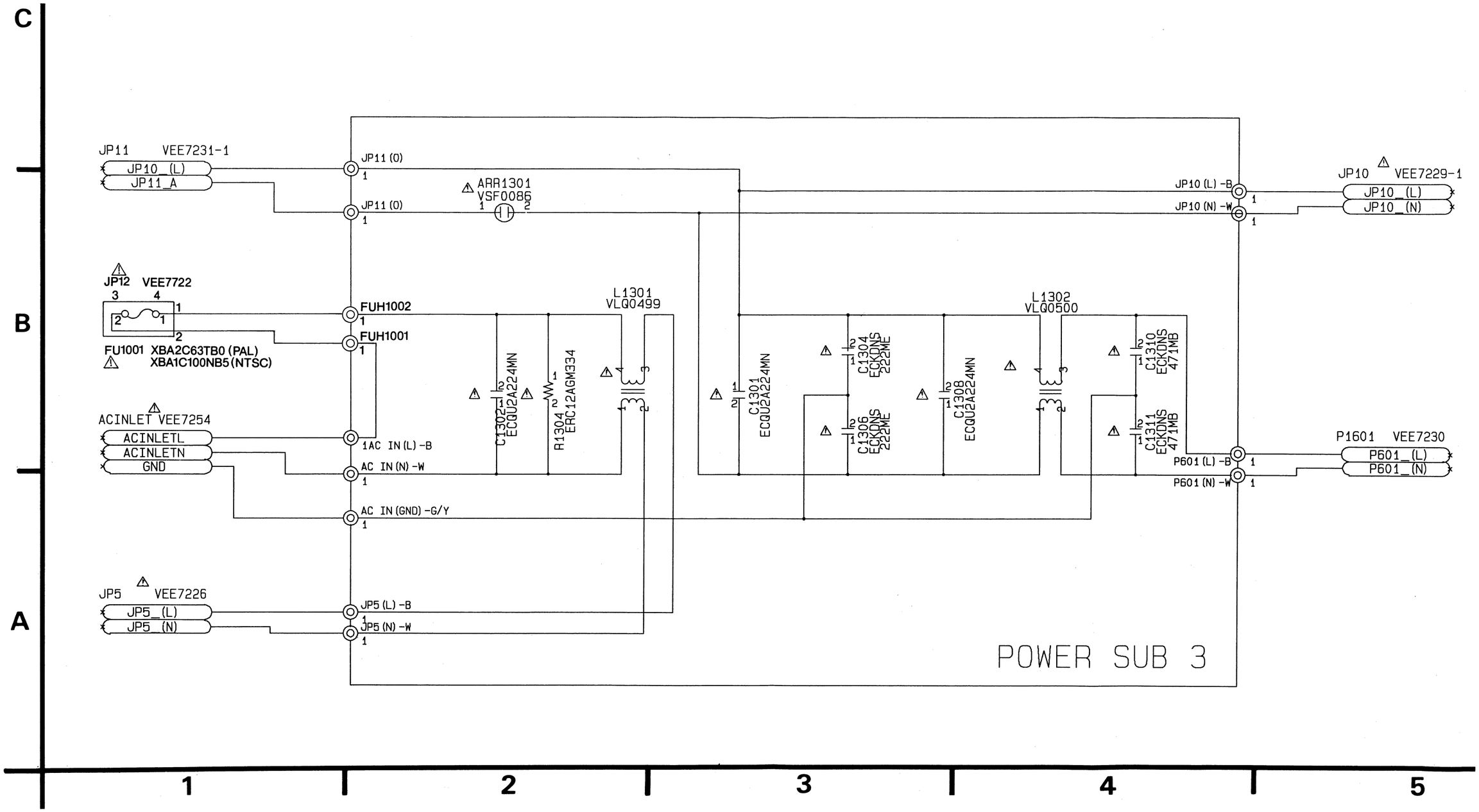

4—2—163

AT POWER SCHEMATIC DIAGRAM

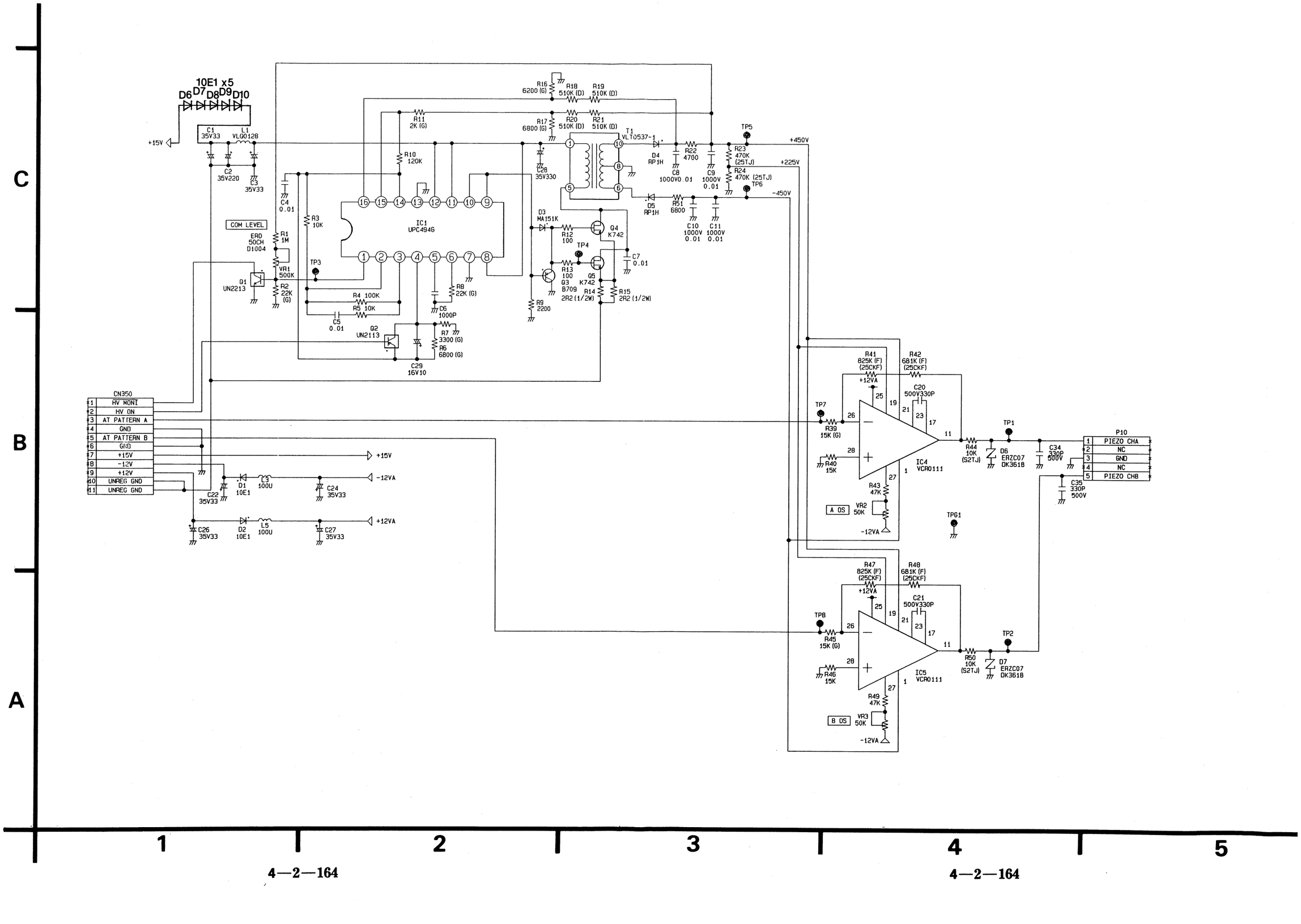

4—2—164

4—2—164

FR MODE SCHEMATIC DIAGRAM

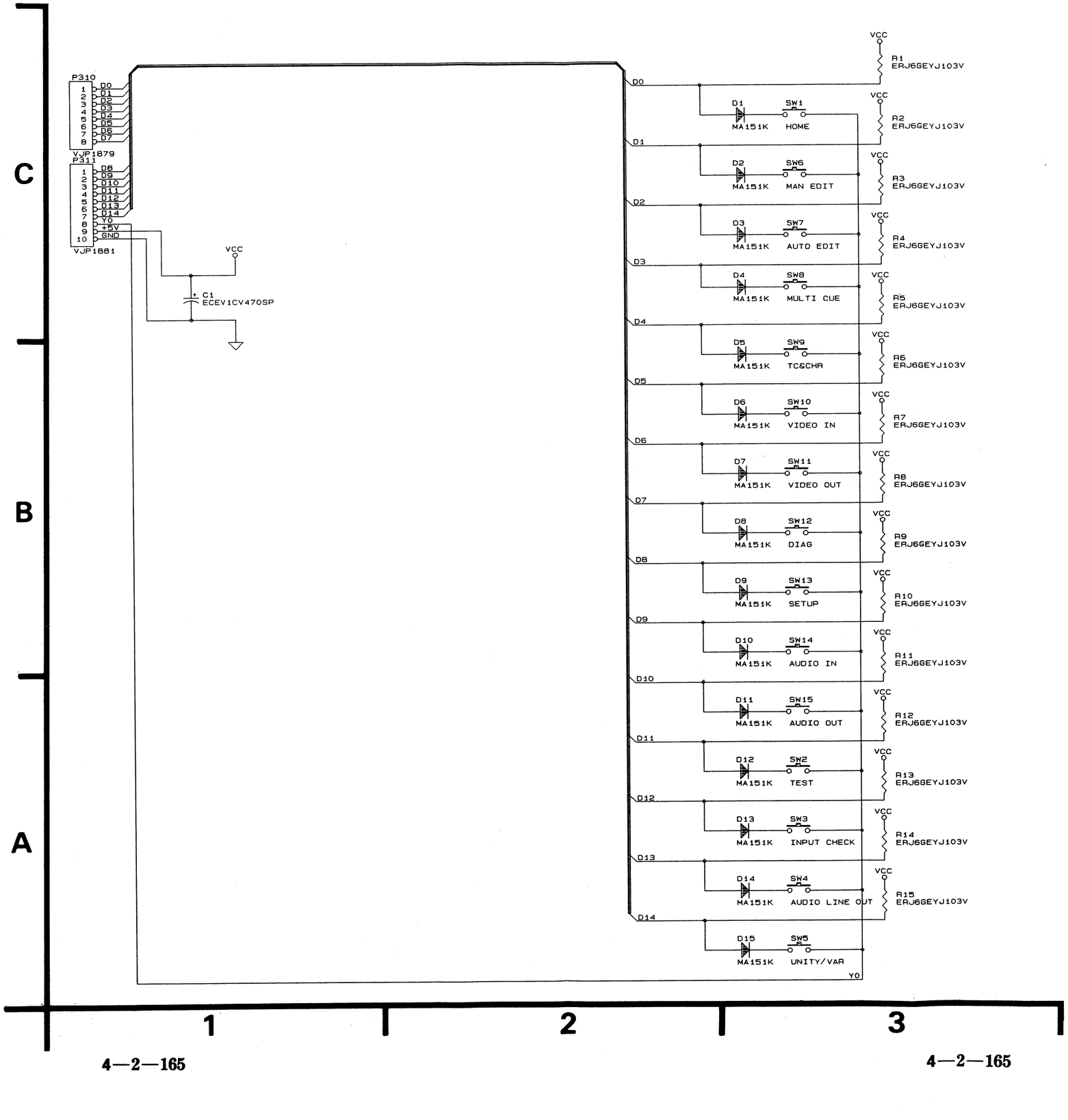

4—2—165

FR SWITCH SCHEMATIC DIAGRAM

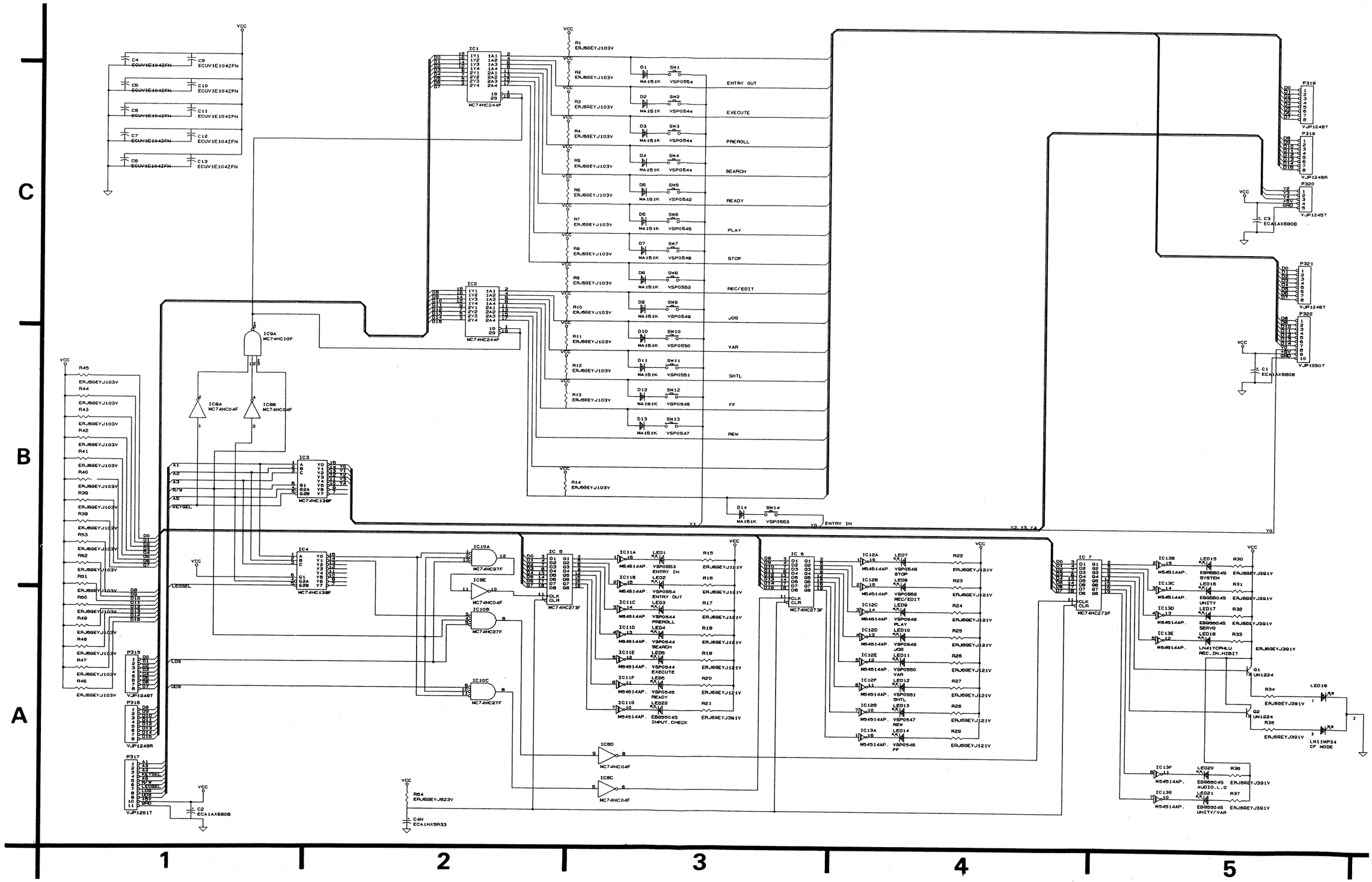

4—2—166

FR FUNCTION SCHEMATIC DIAGRAM

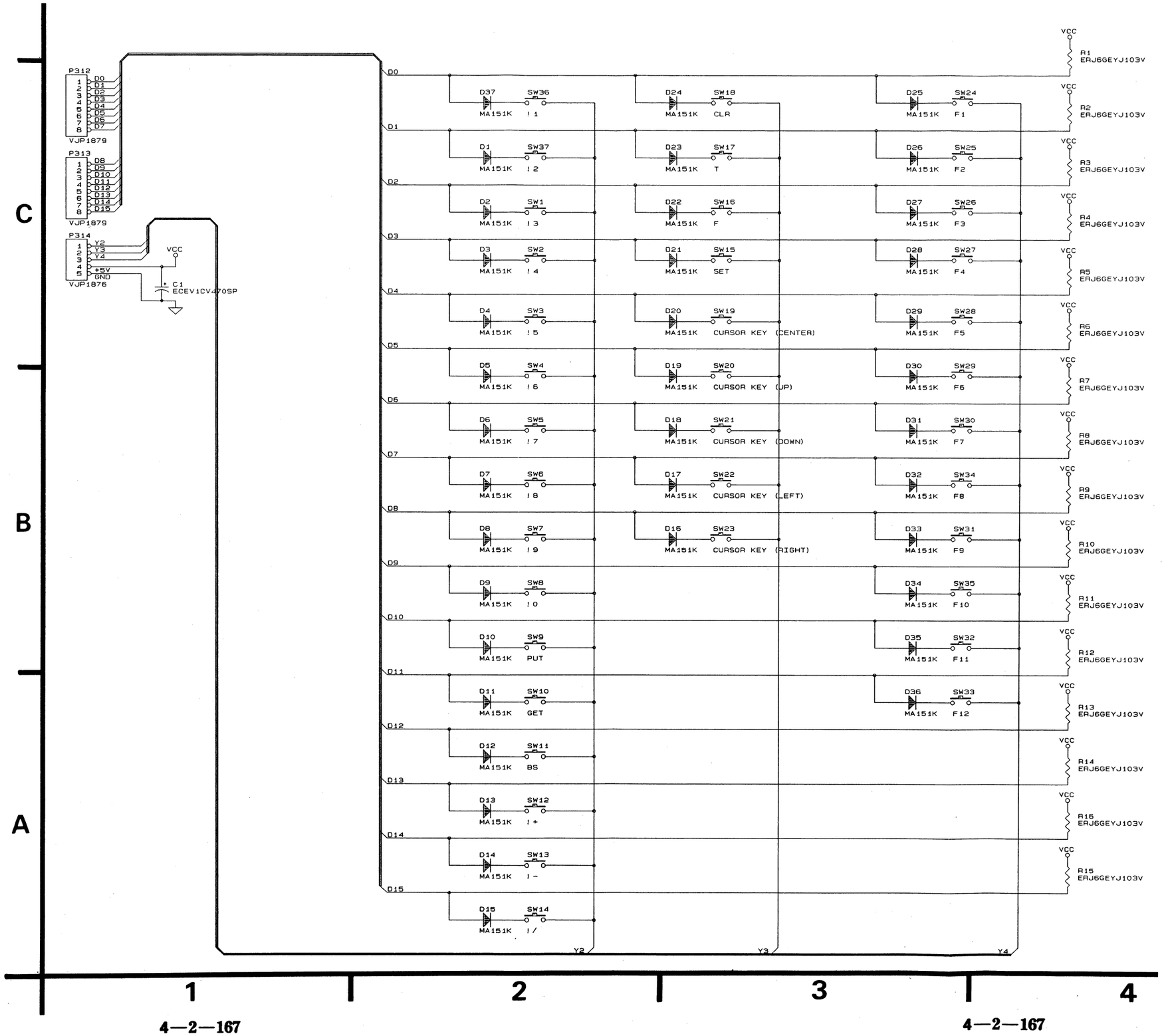

4—2—167

FR BASE 1 SCHEMATIC DIAGRAM (1/5)

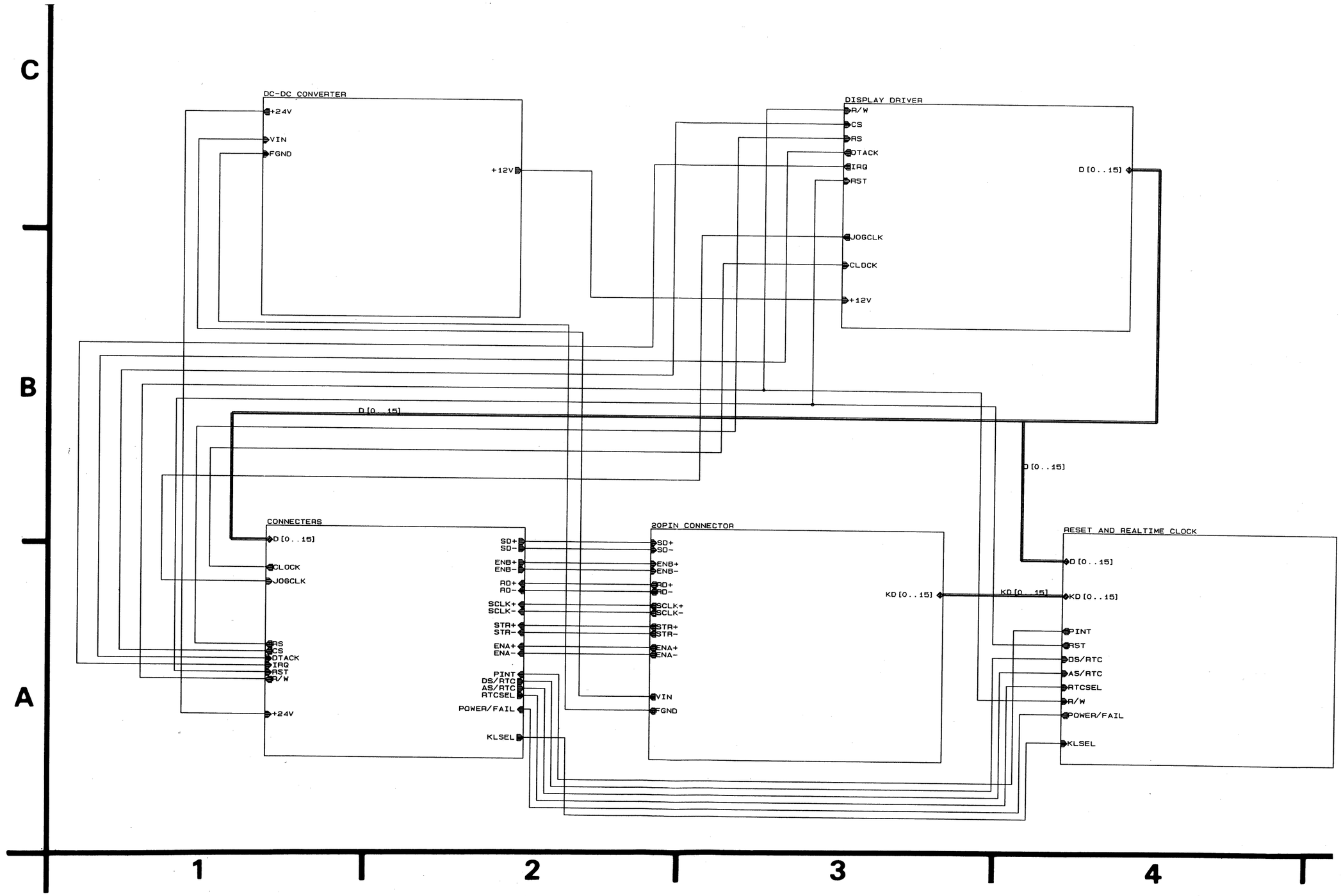

4—2—168

FR BASE 1 SCHEMATIC DIAGRAM (2/5)

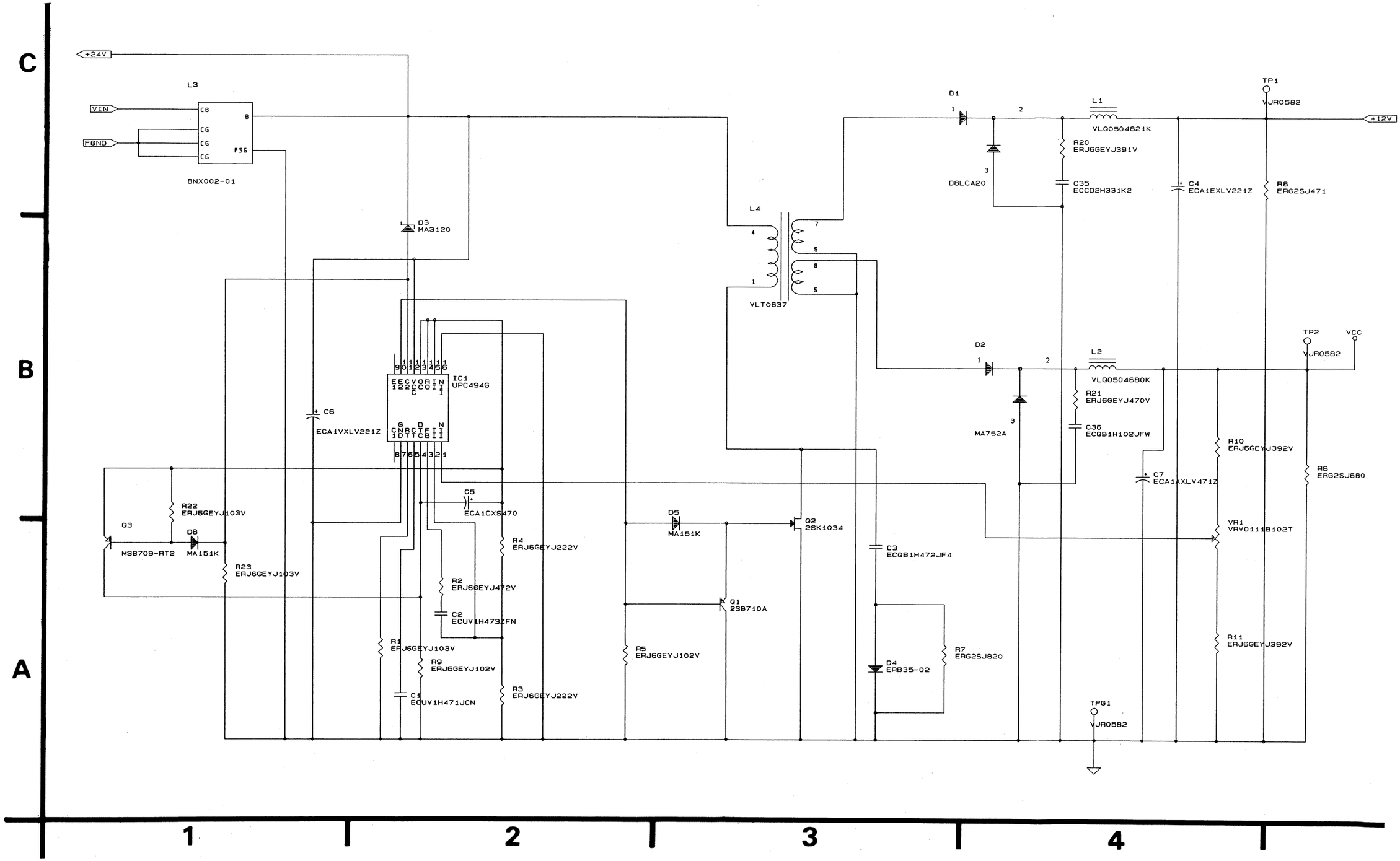

4—2—169

FR BASE 1 SCHEMATIC DIAGRAM (3/5)

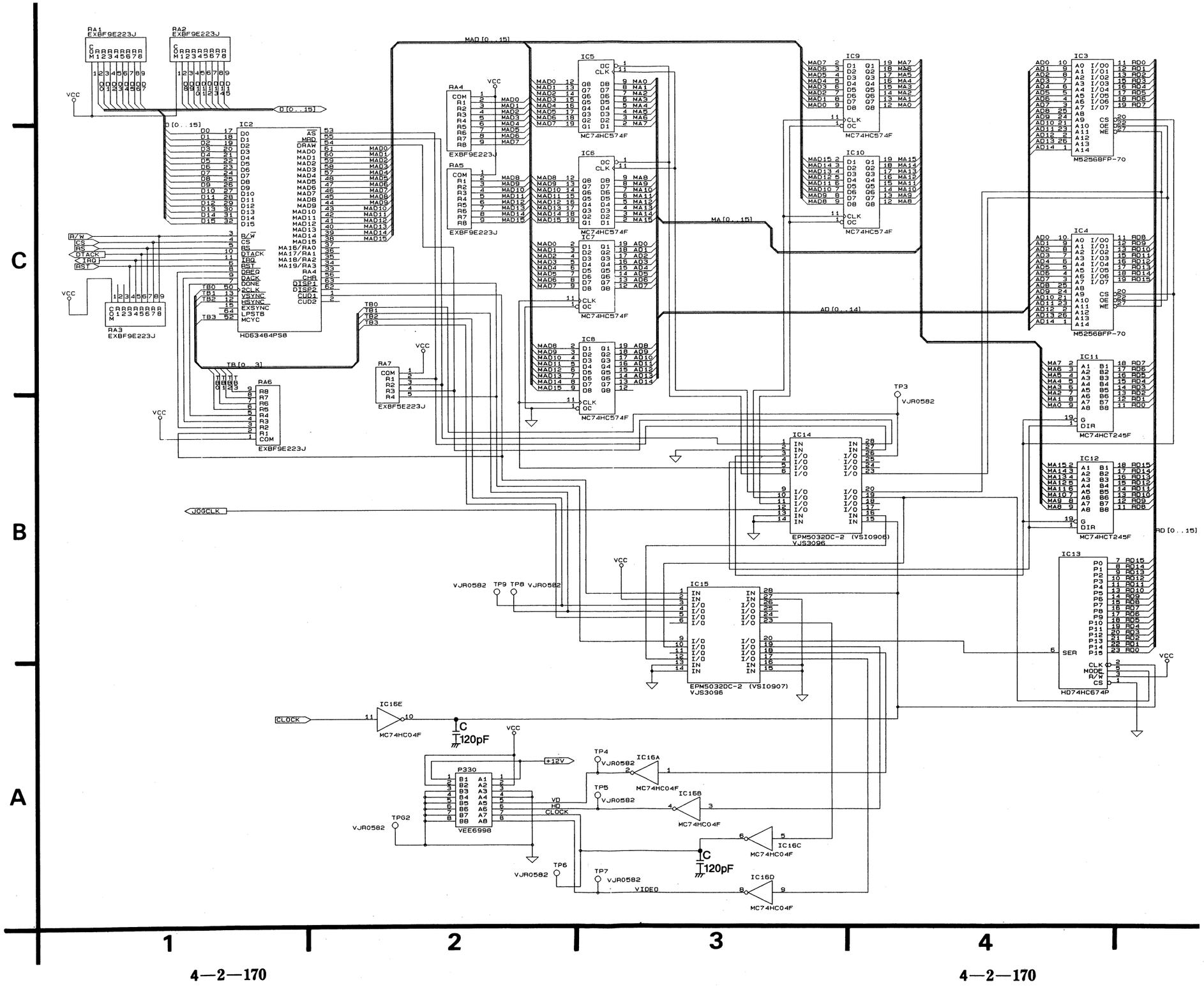

4—2—170

FR BASE 1 SCHEMATIC DIAGRAM (4/5)

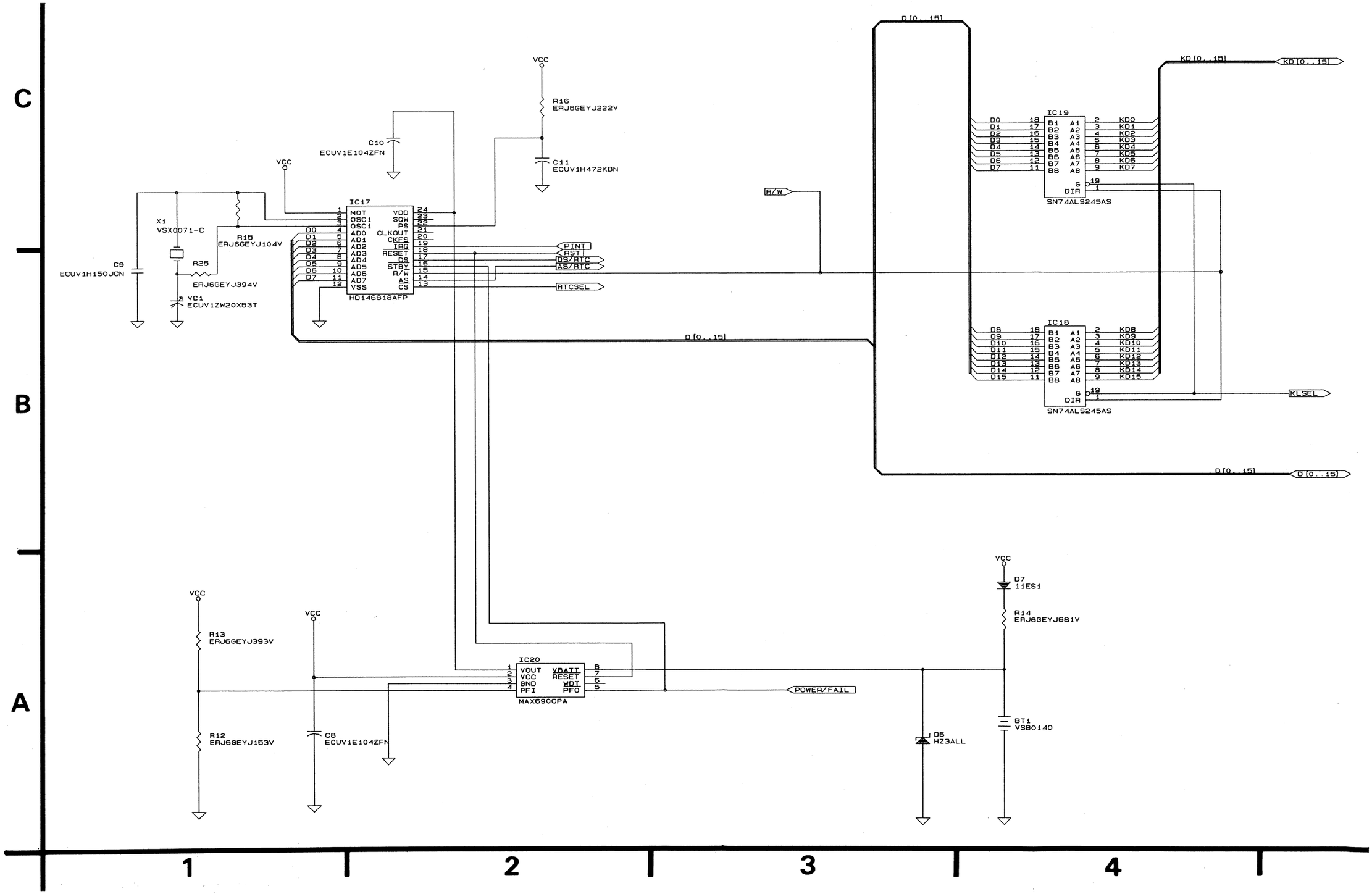

4—2—171

4—2—171

FR BASE 1 SCHEMATIC DIAGRAM (5/5)

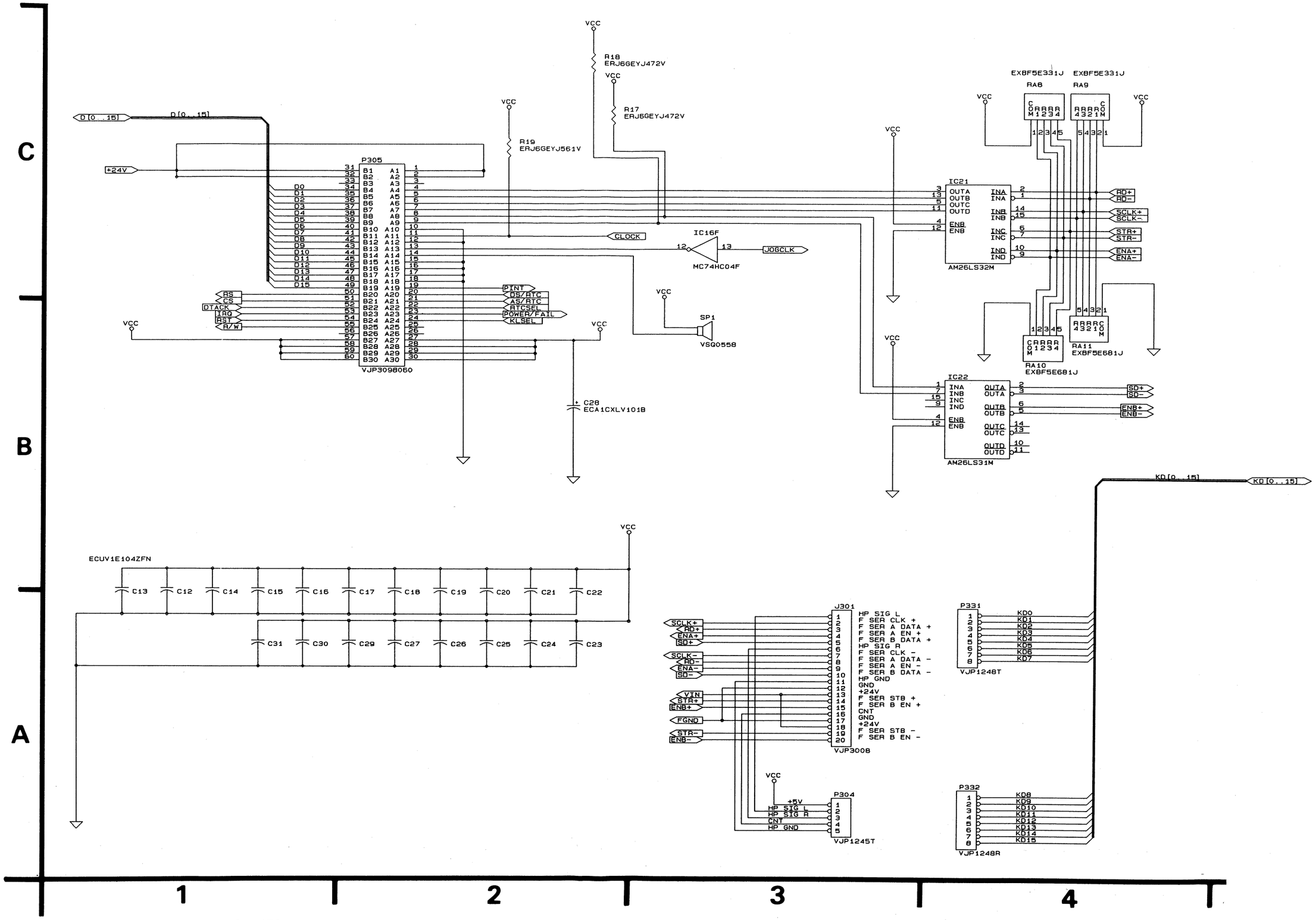

4—2—172

FR BASE 2 SCHEMATIC DIAGRAM (1/5)

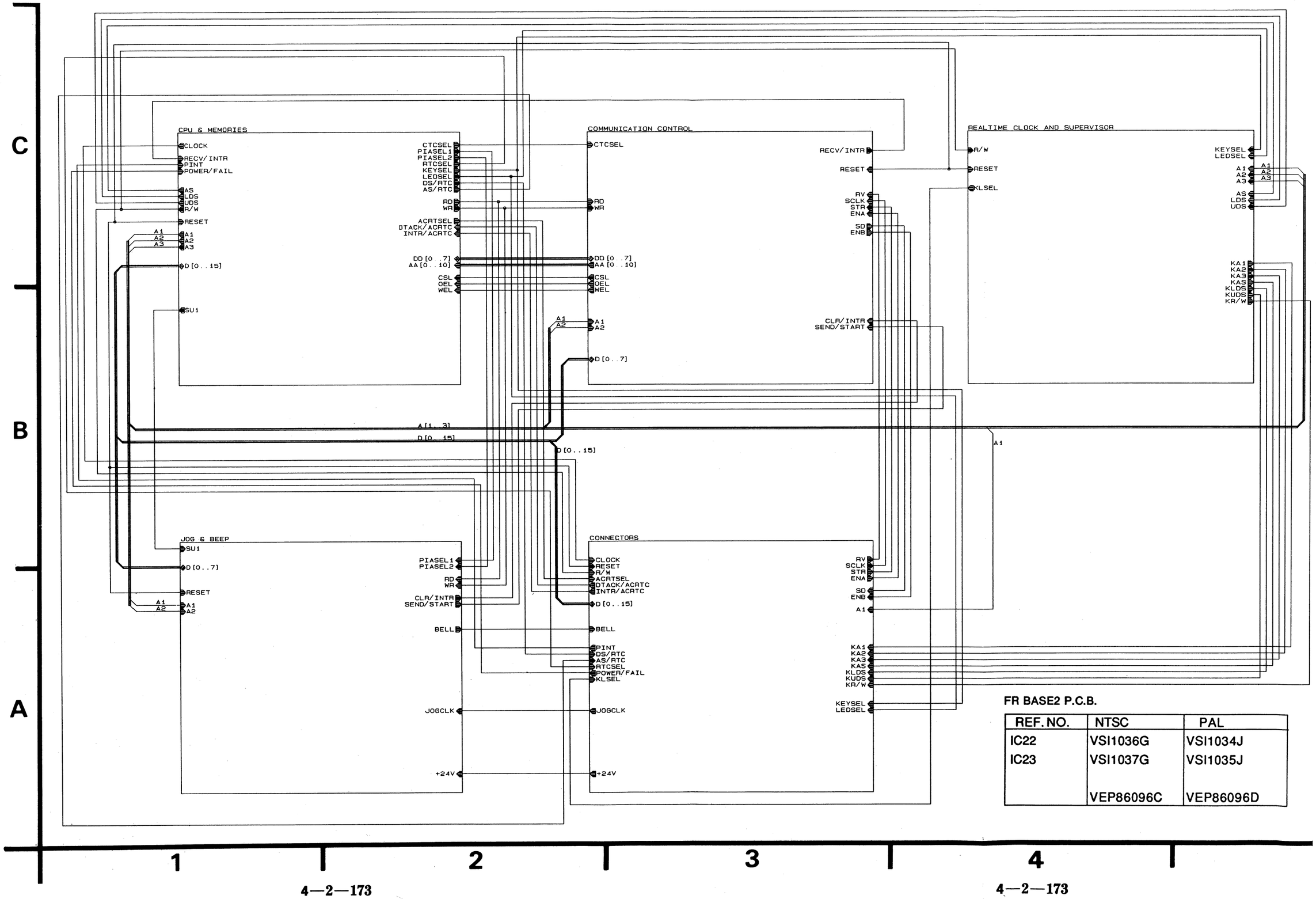

FR BASE2 P.C.B.

REF. NO.	NTSC	PAL
IC22	VSI1036G	VSI1034J
IC23	VSI1037G	VSI1035J
	VEP86096C	VEP86096D

4—2—173

FR BASE 2 SCHEMATIC DIAGRAM (2/5)

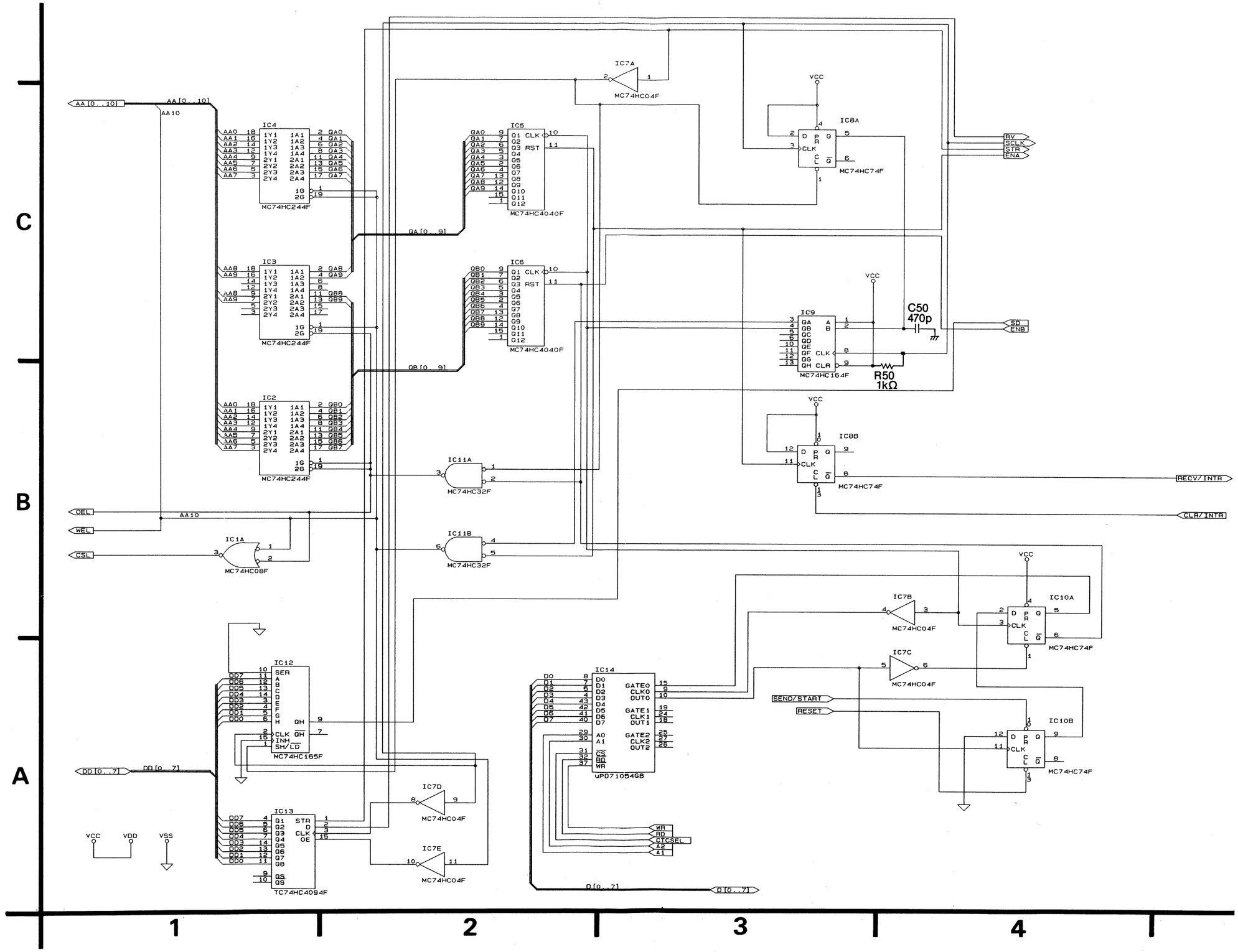

4—2—174

4—2—174

FR BASE 2 SCHEMATIC DIAGRAM (3/5)

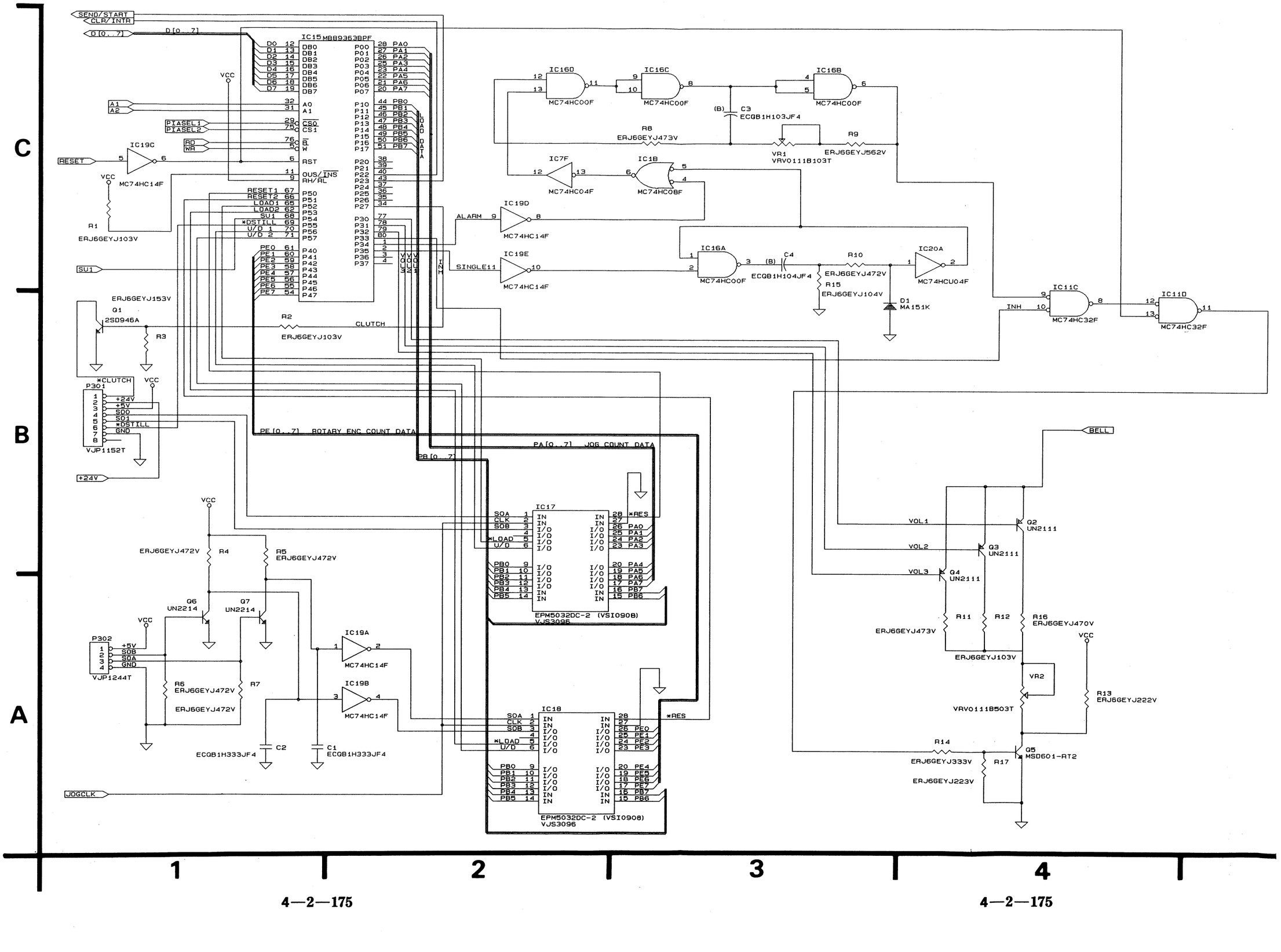

4—2—175

FR BASE 2 SCHEMATIC DIAGRAM (4/5)

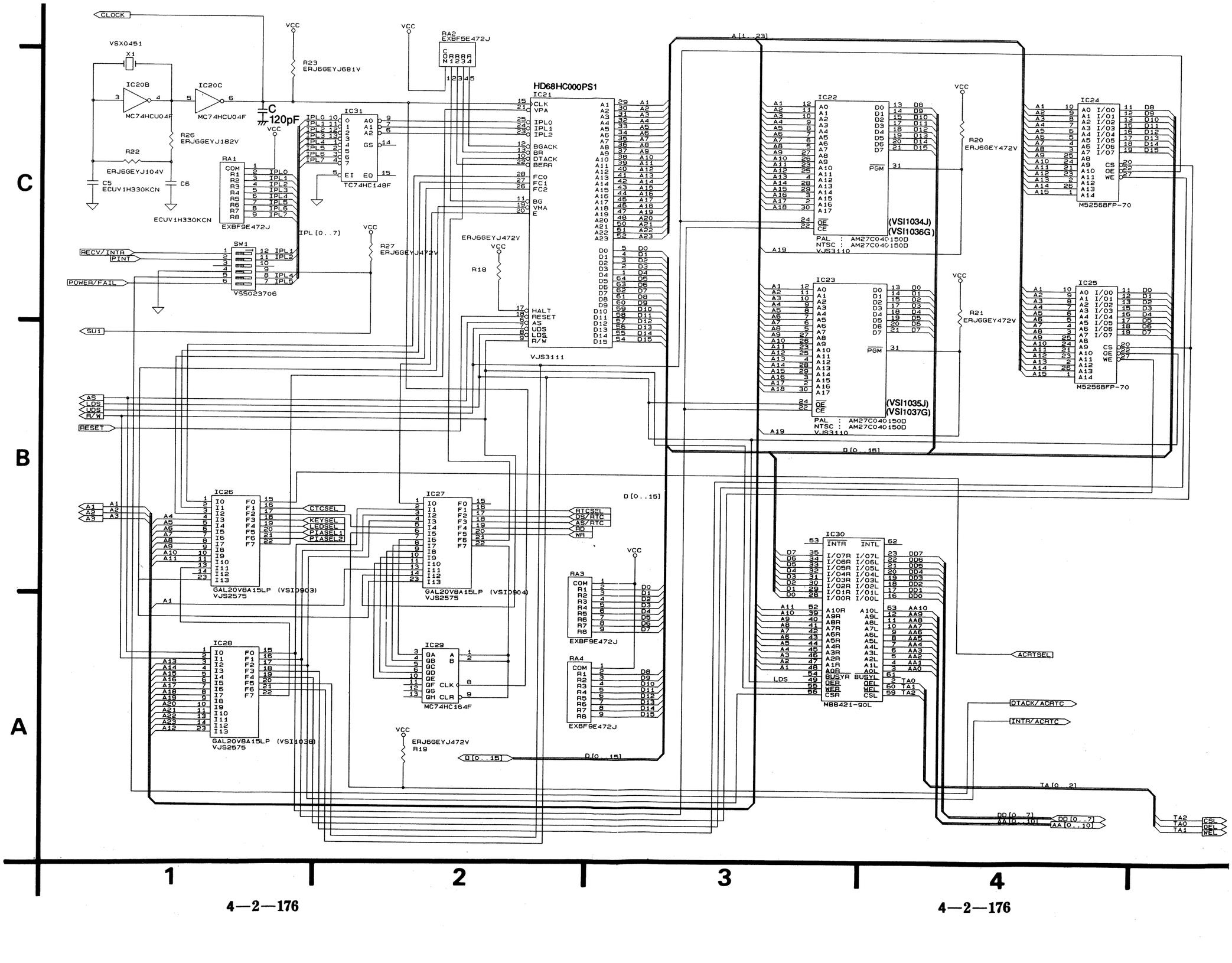

C

B

A

1 2 3 4

FR BASE 2 SCHEMATIC DIAGRAM (5/5)

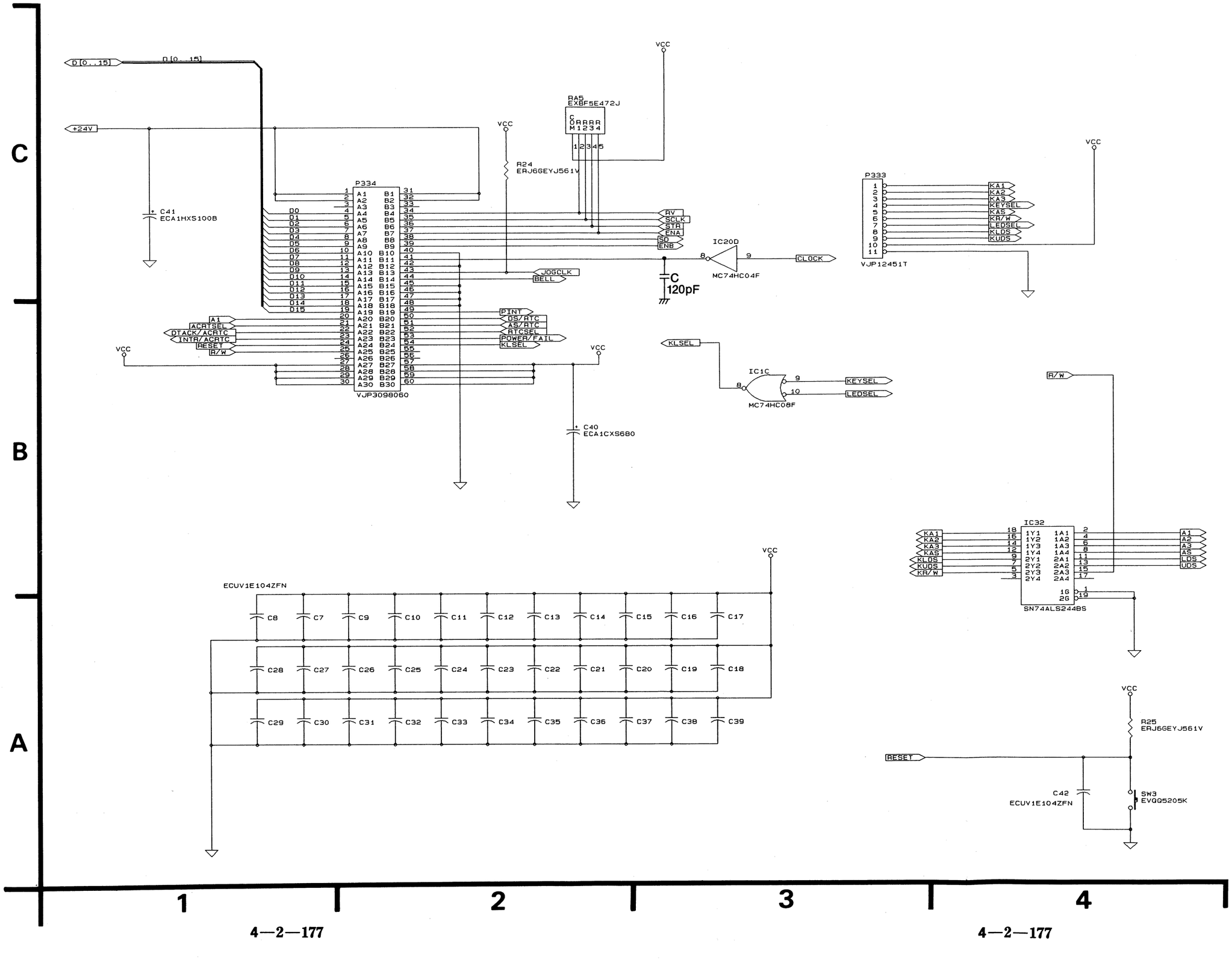

4—2—177

REMOTE JACK 1 SCHEMATIC DIAGRAM

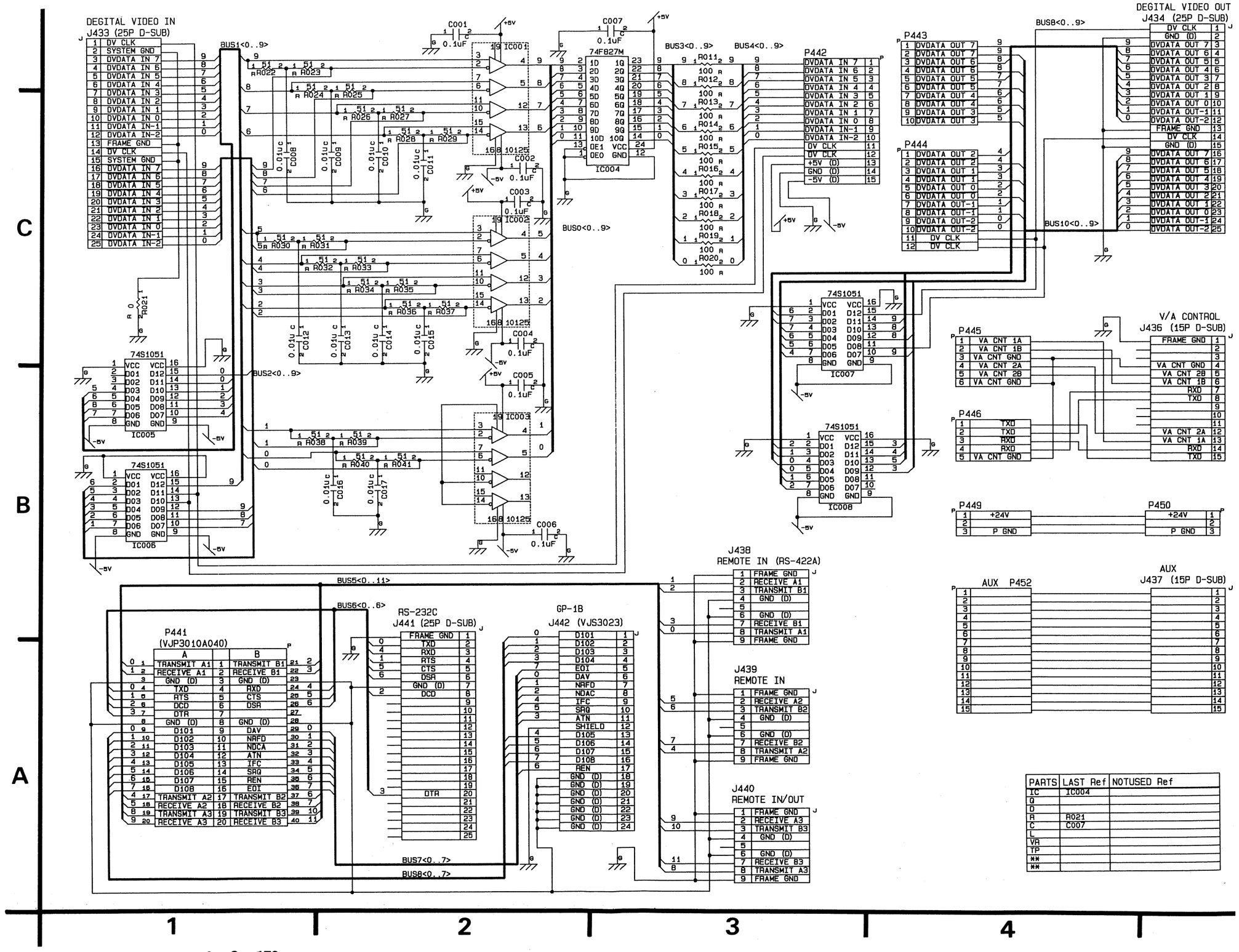

PARTS	LAST Ref	NOTUSED Ref
IC	IC004	
G		
D		
R	R021	
C	C007	
L		
VR		
TP		
**		
**		

4—2—178

VIDEO IN/OUT SCHEMATIC DIAGRAM

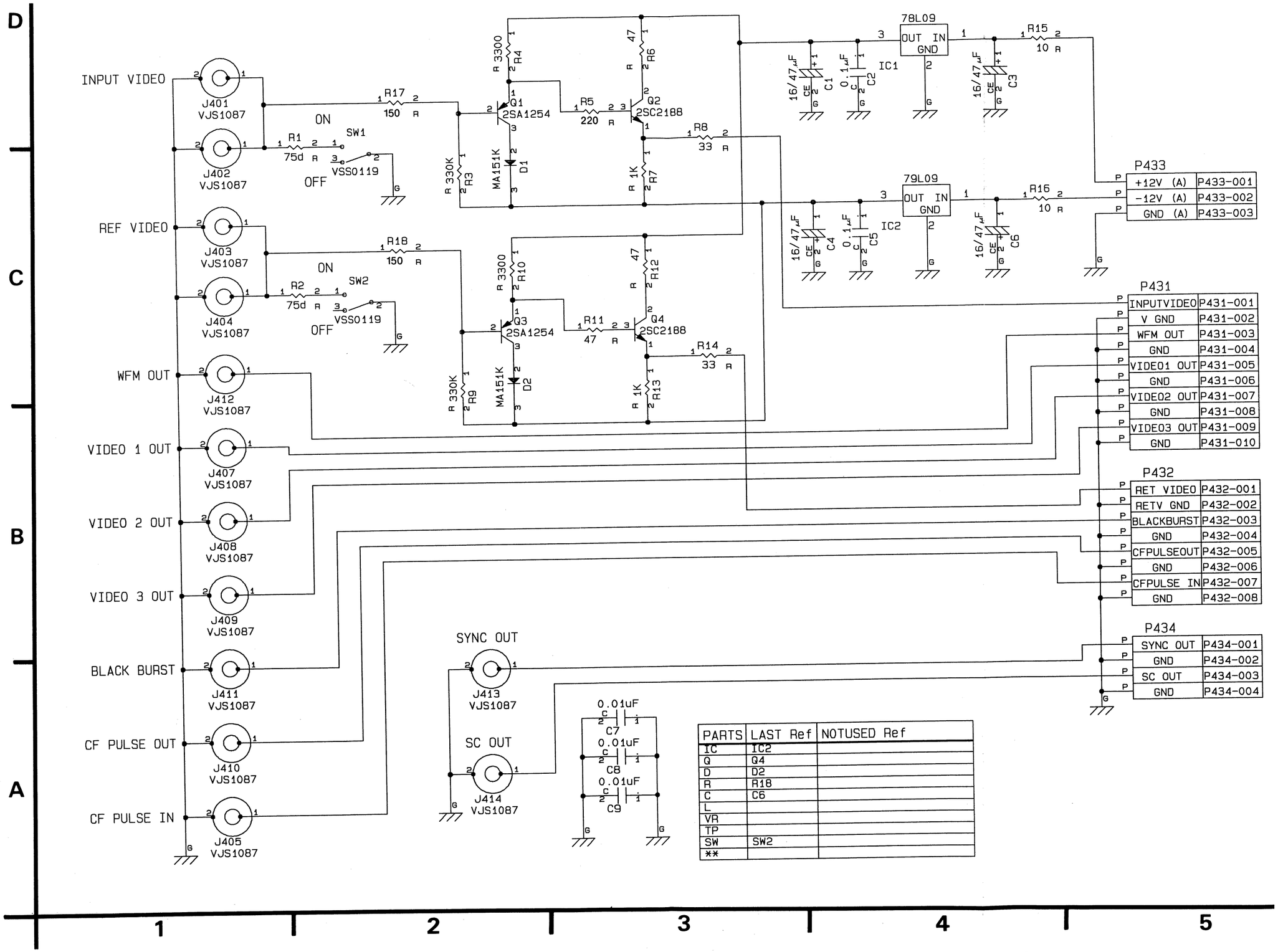

4—2—179

AUDIO MONITOR SCHEMATIC DIAGRAM

COMPARISON CHART BETWEEN
NTSC MODEL AND PAL MODEL
AUDIO IN/OUT MONITOR P.C.B.

REF. NO.	NTSC	PAL
	VEP81422A	VEP84122B

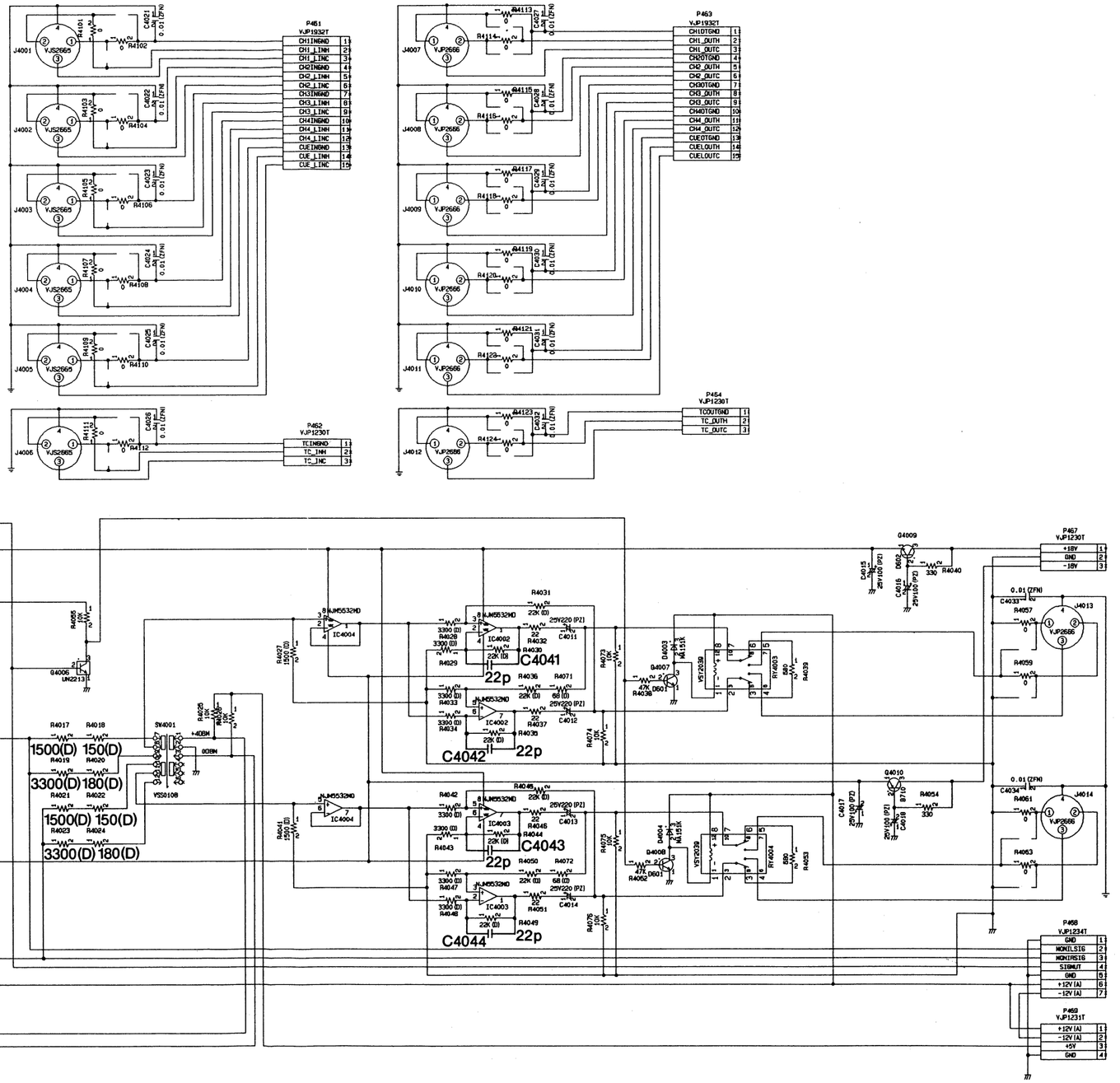

C

B

A

1 2 3 4

4—2—180

AUDIO IN/OUT SCHEMATIC DIAGRAM (1/4) [FOR PAL]

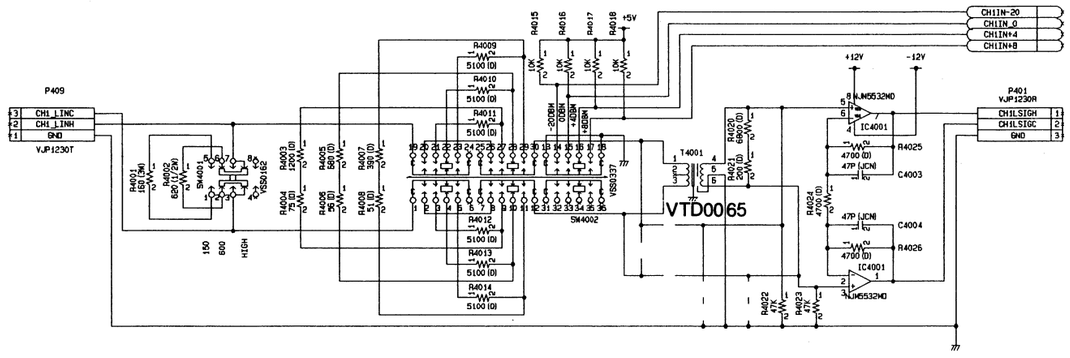

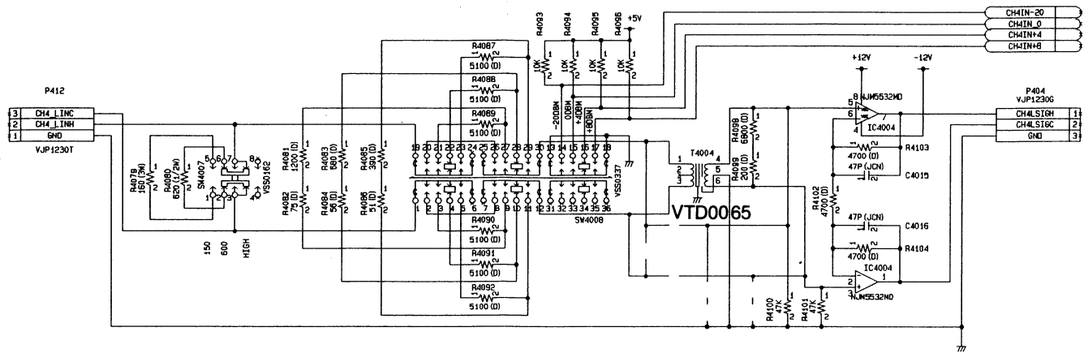

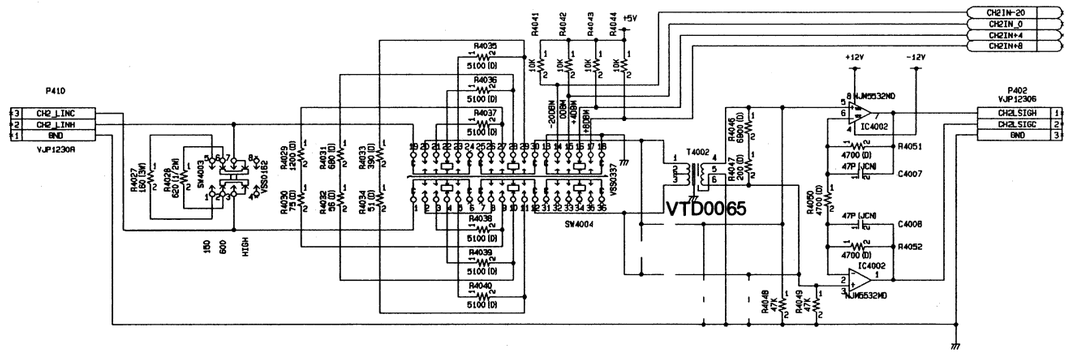

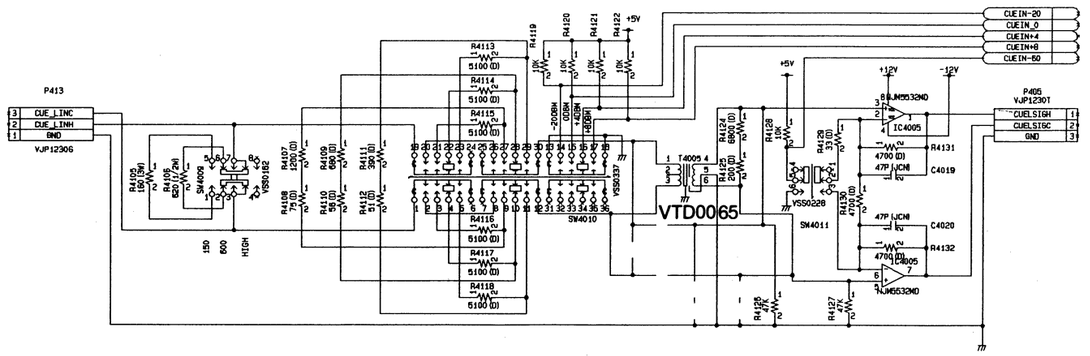

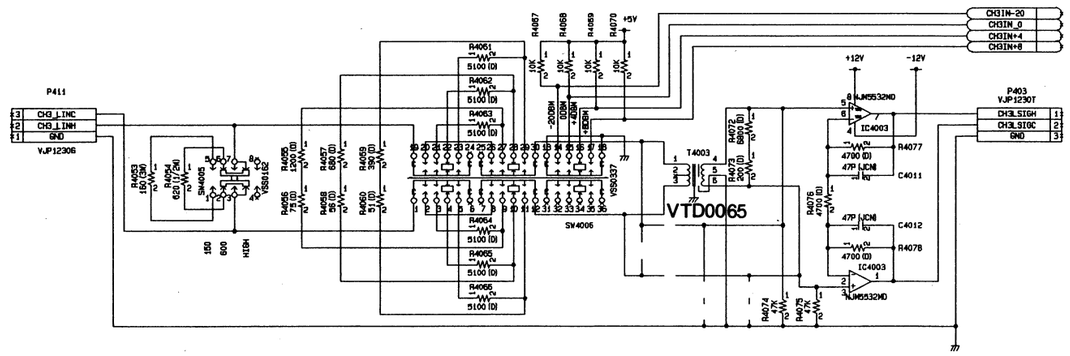

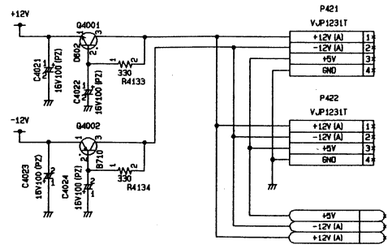

A B C

1 2 3 4 5

4—2—181

AUDIO IN/OUT SCHEMATIC DIAGRAM (2/4) [FOR PAL]

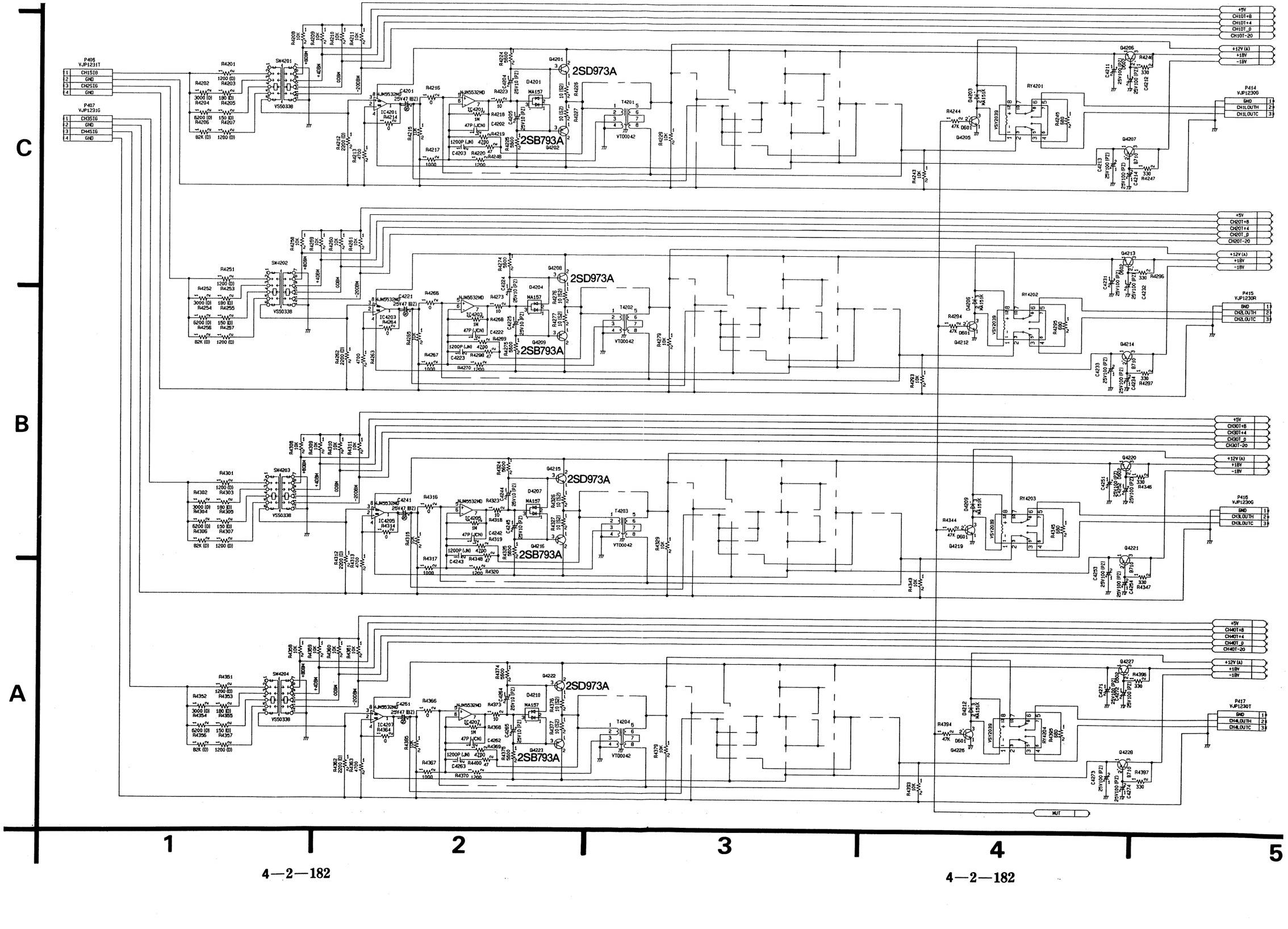

AUDIO IN/OUT SCHEMATIC DIAGRAM (3/4) [FOR PAL]

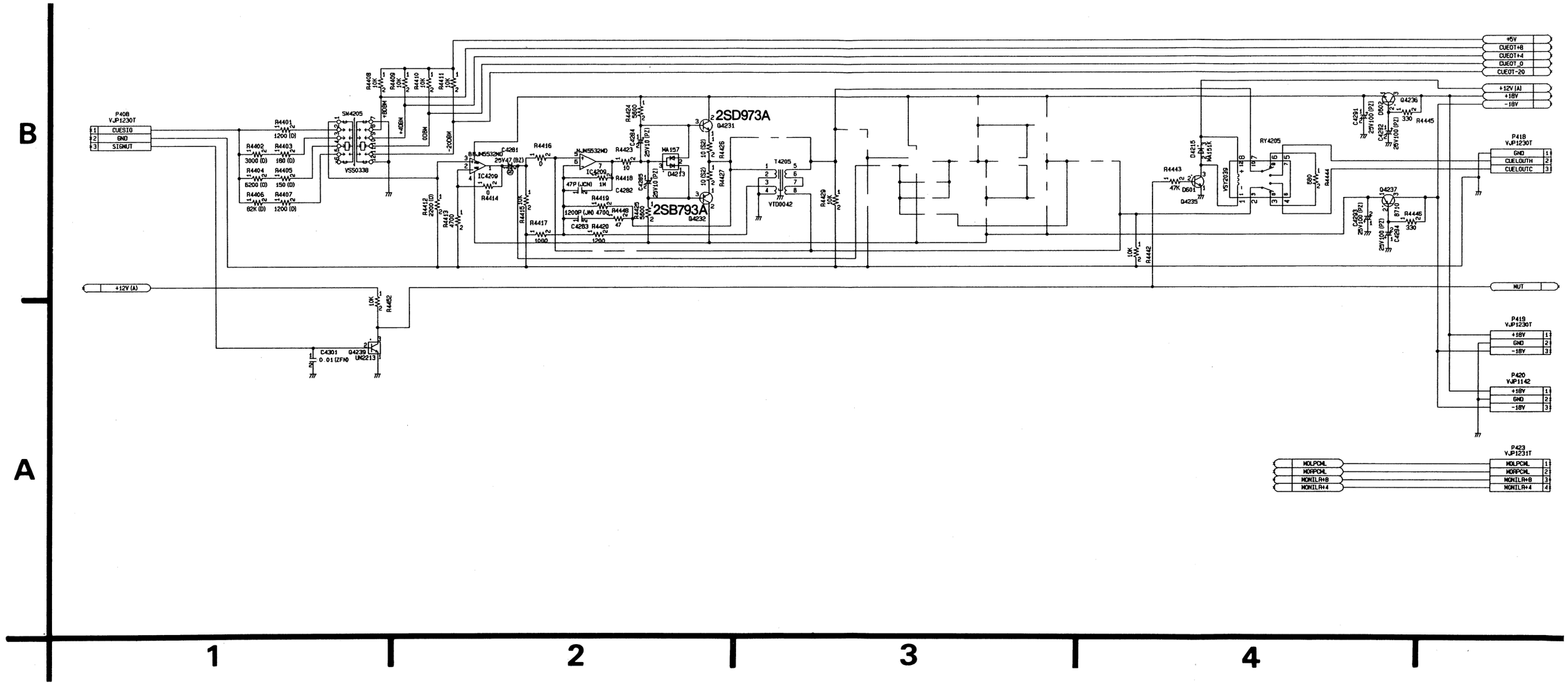

4—2—183

AUDIO IN/OUT SCHEMATIC DIAGRAM (4/4) [FOR PAL]

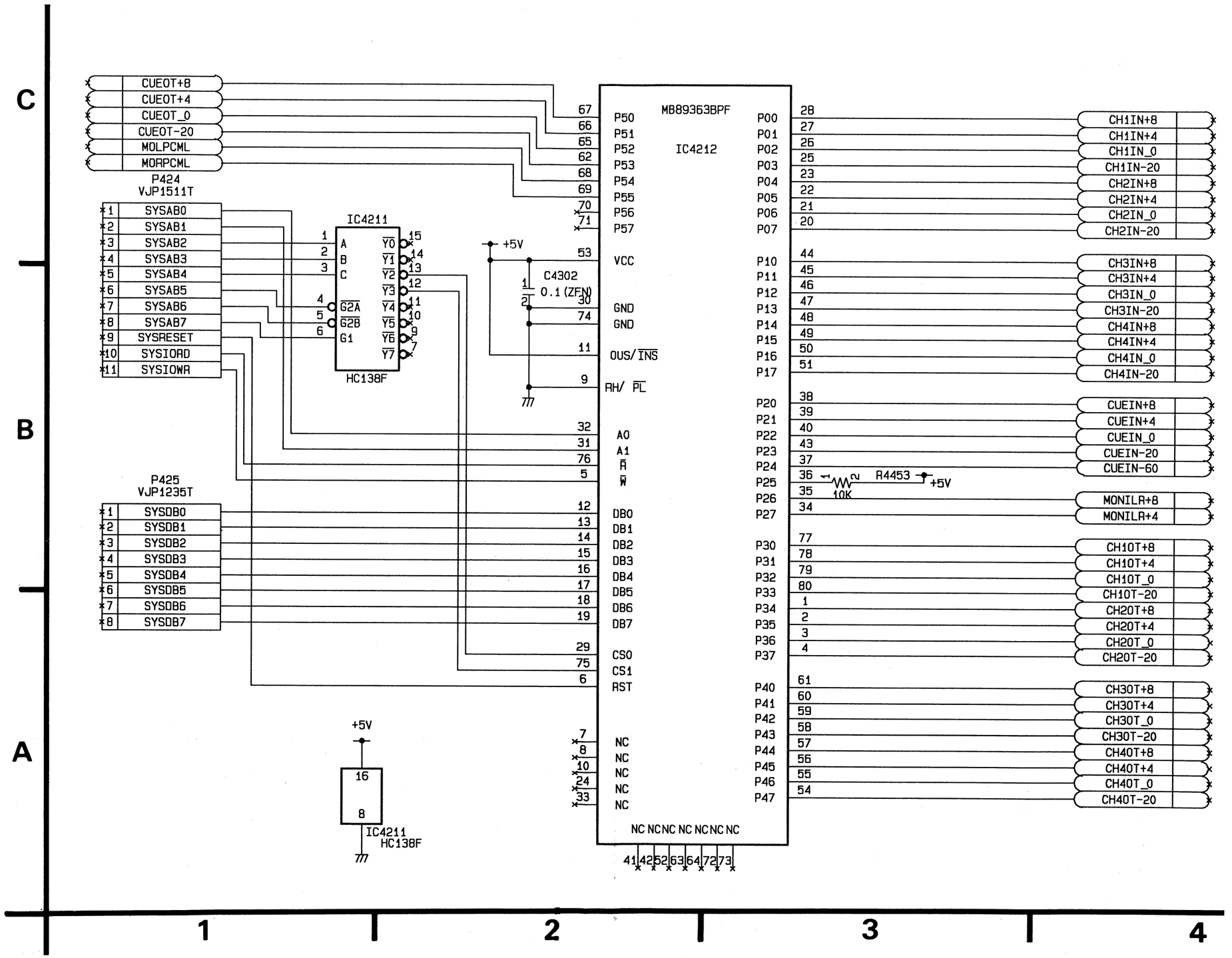

4—2—184

AUDIO IN/OUT SCHEMATIC DIAGRAM (1/4) [FOR NTSC]

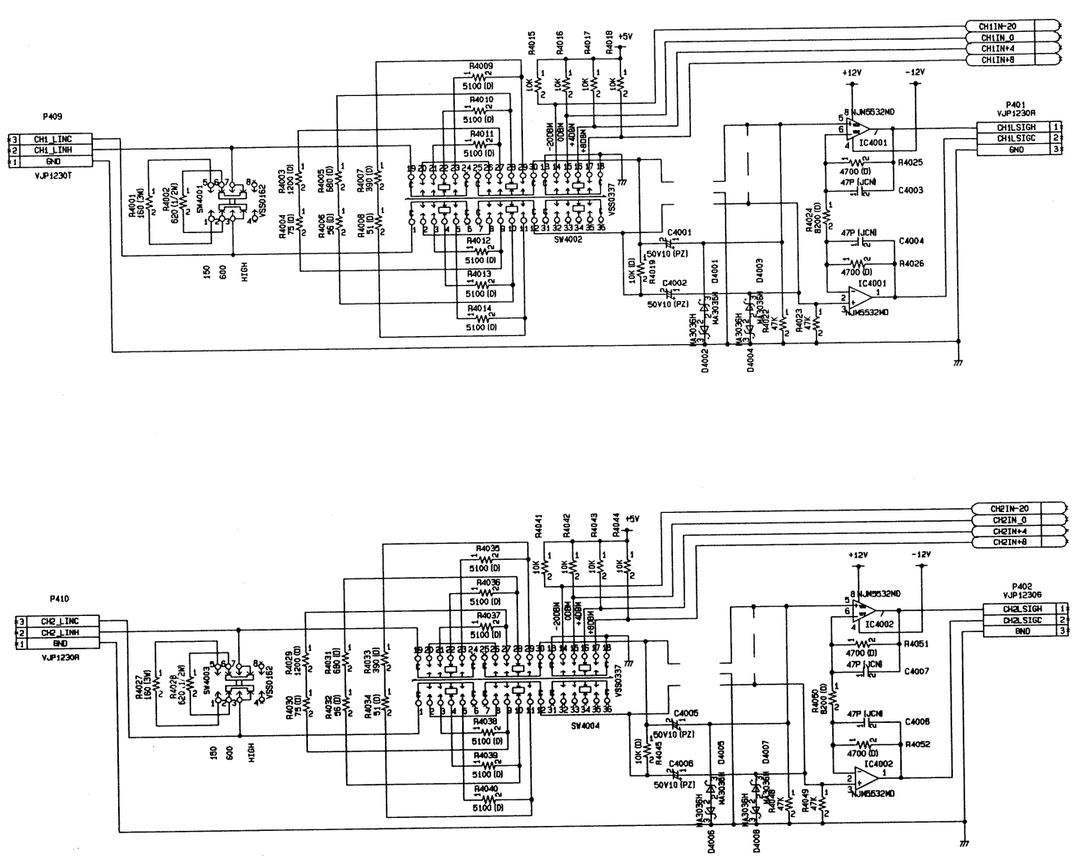

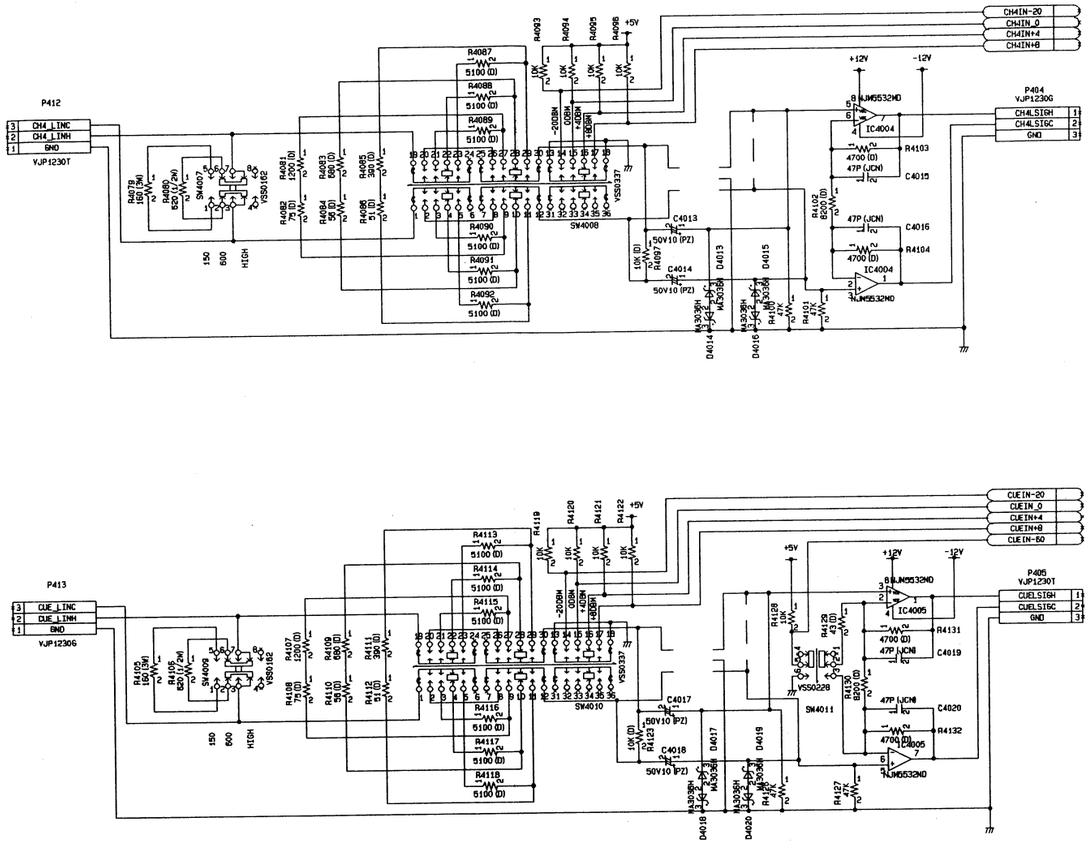

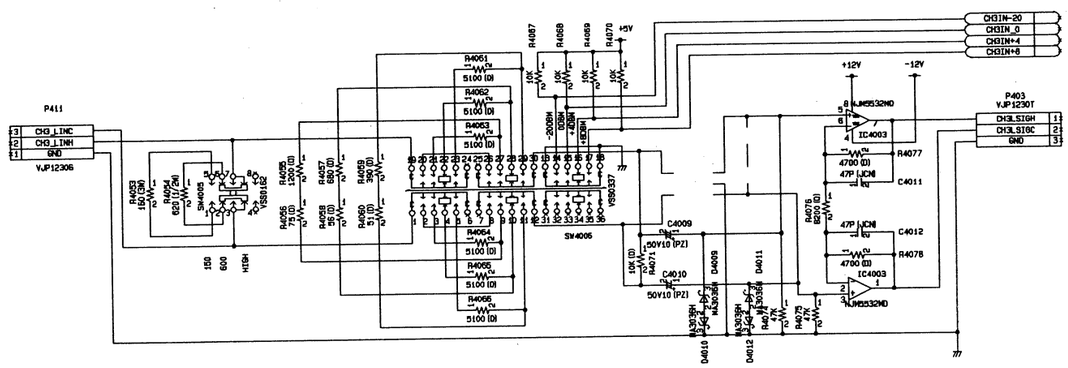

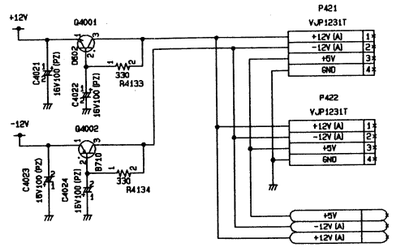

A B C

1 2 3 4 5

4—2—185

AUDIO IN/OUT SCHEMATIC DIAGRAM (2/4) [FOR NTSC]

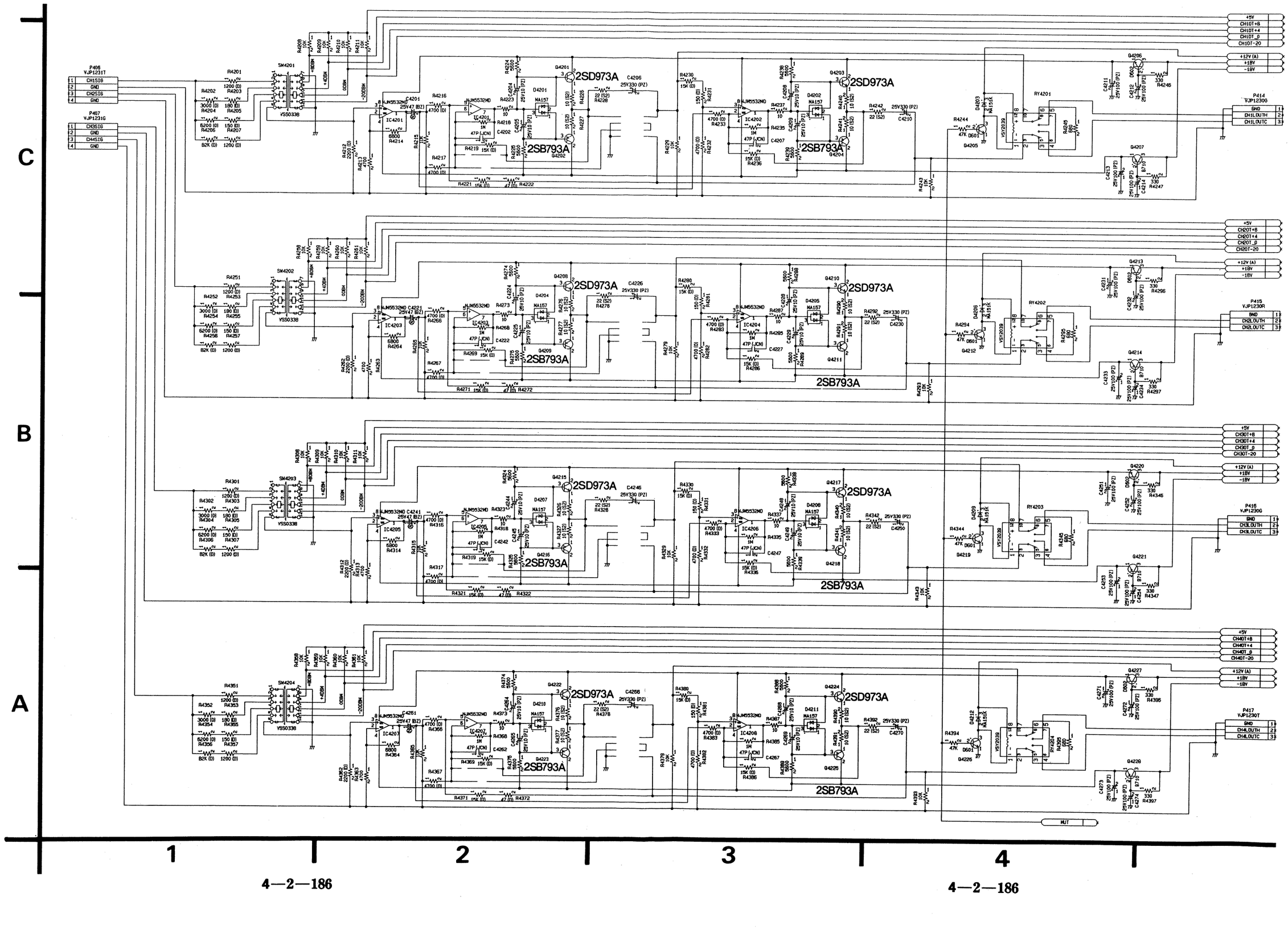

4—2—186

AUDIO IN/OUT SCHEMATIC DIAGRAM (3/4) [FOR NTSC]

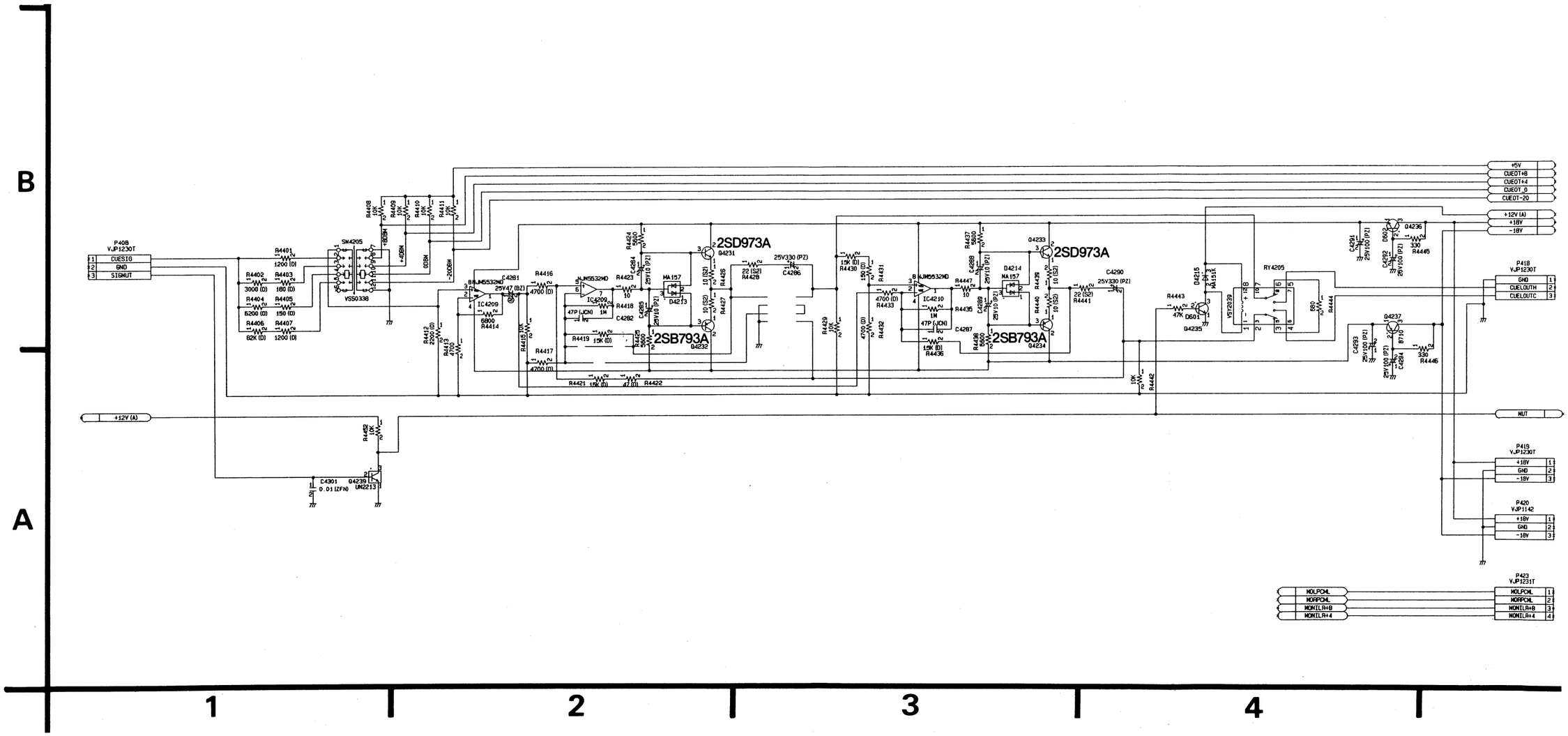

4—2—187

AUDIO IN/OUT SCHEMATIC DIAGRAM (4/4) [FOR NTSC]

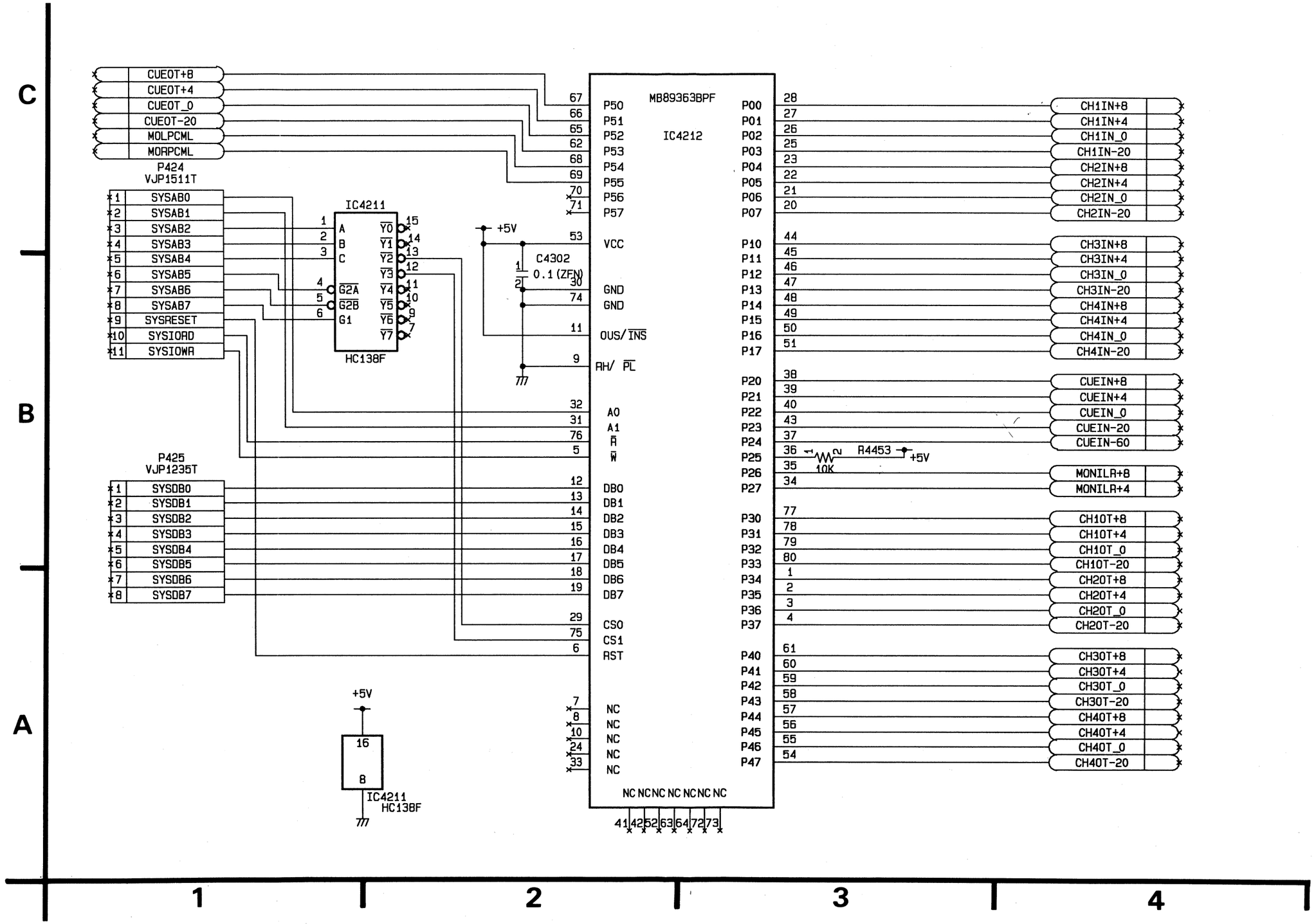

4—2—188

FR HP AMP SCHEMATIC DIAGRAM

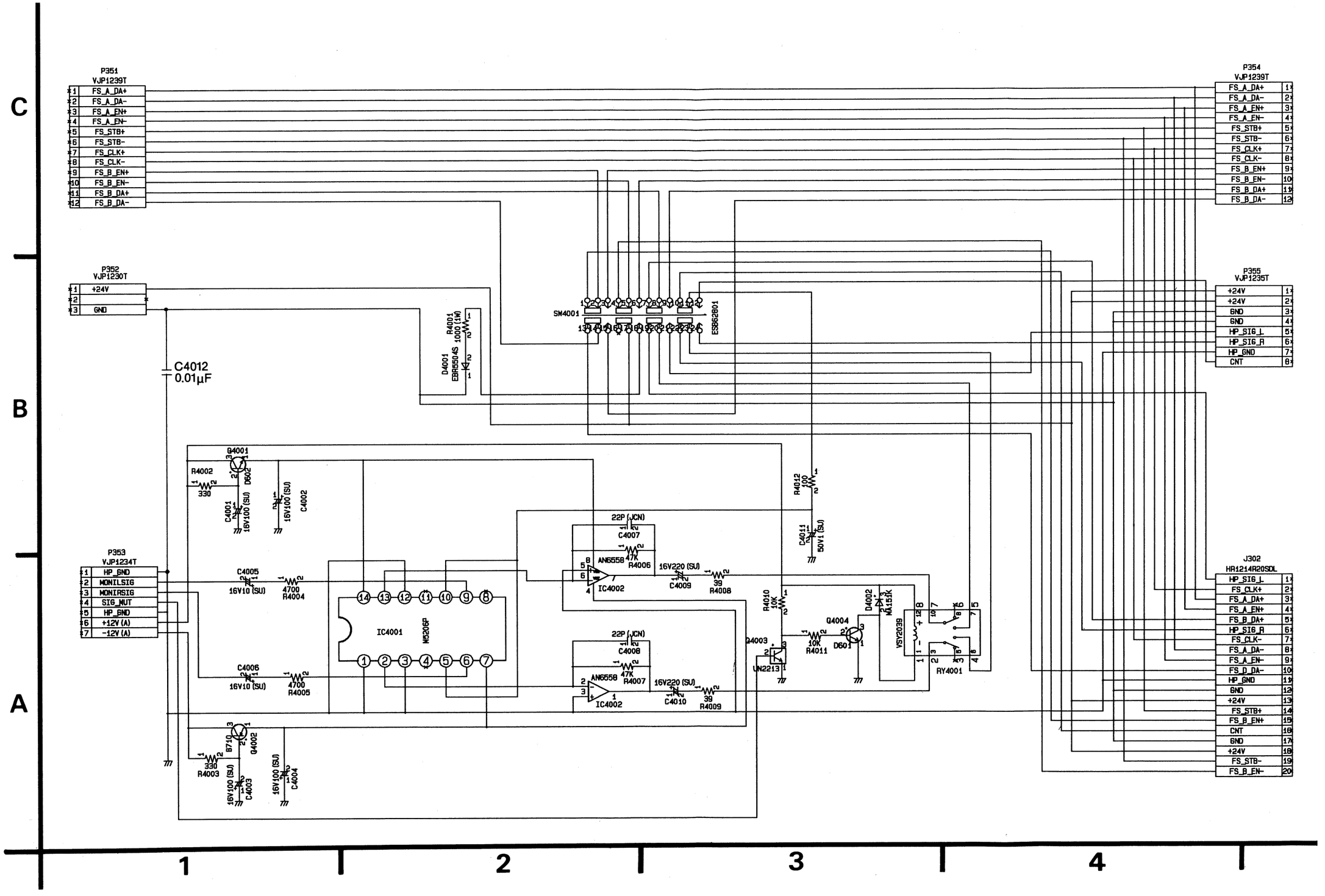

4—2—189

D AUDIO IN SCHEMATIC DIAGRAM

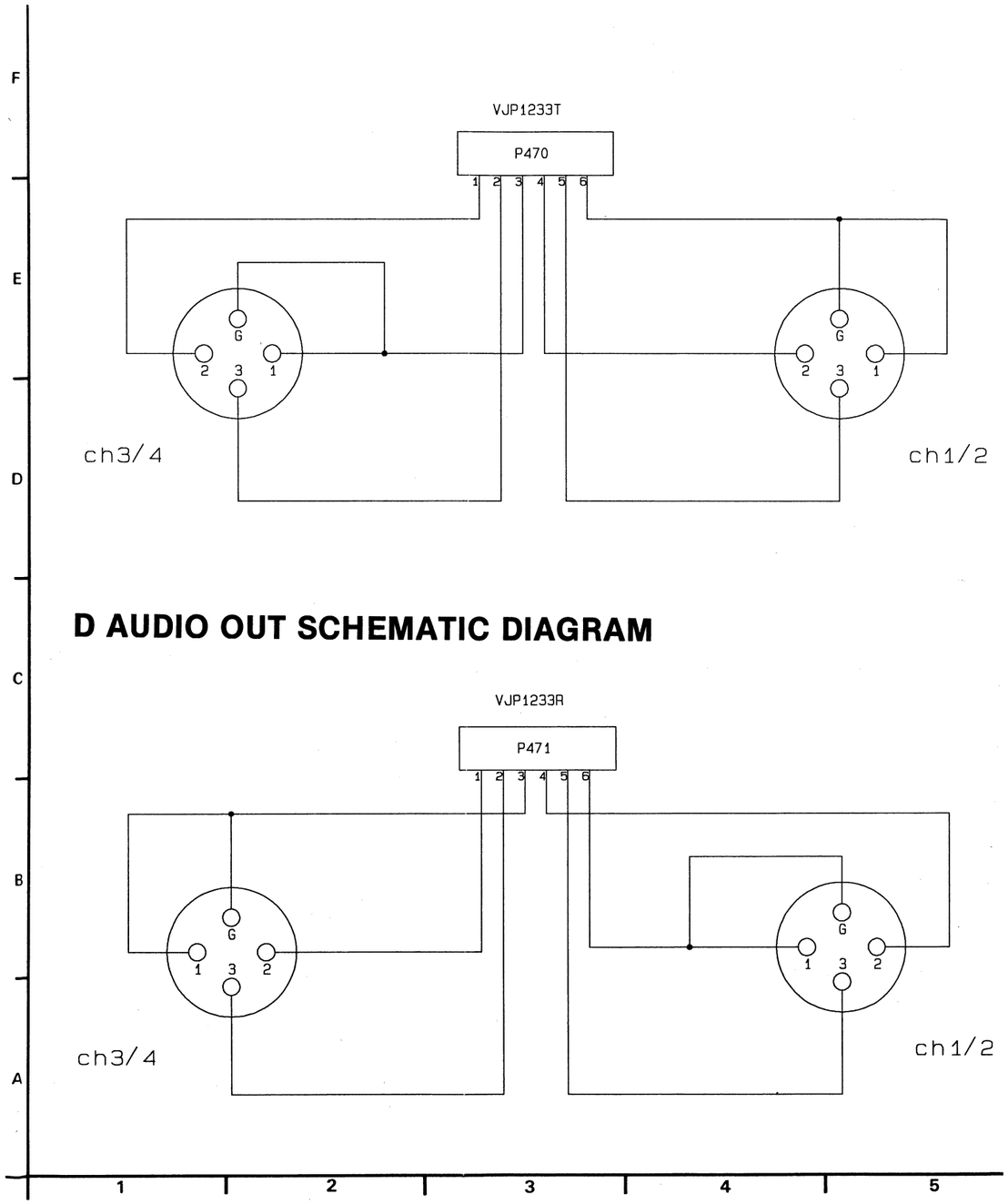

D AUDIO OUT SCHEMATIC DIAGRAM

REMOTE JACK 3 SCHEMATIC DIAGRAM

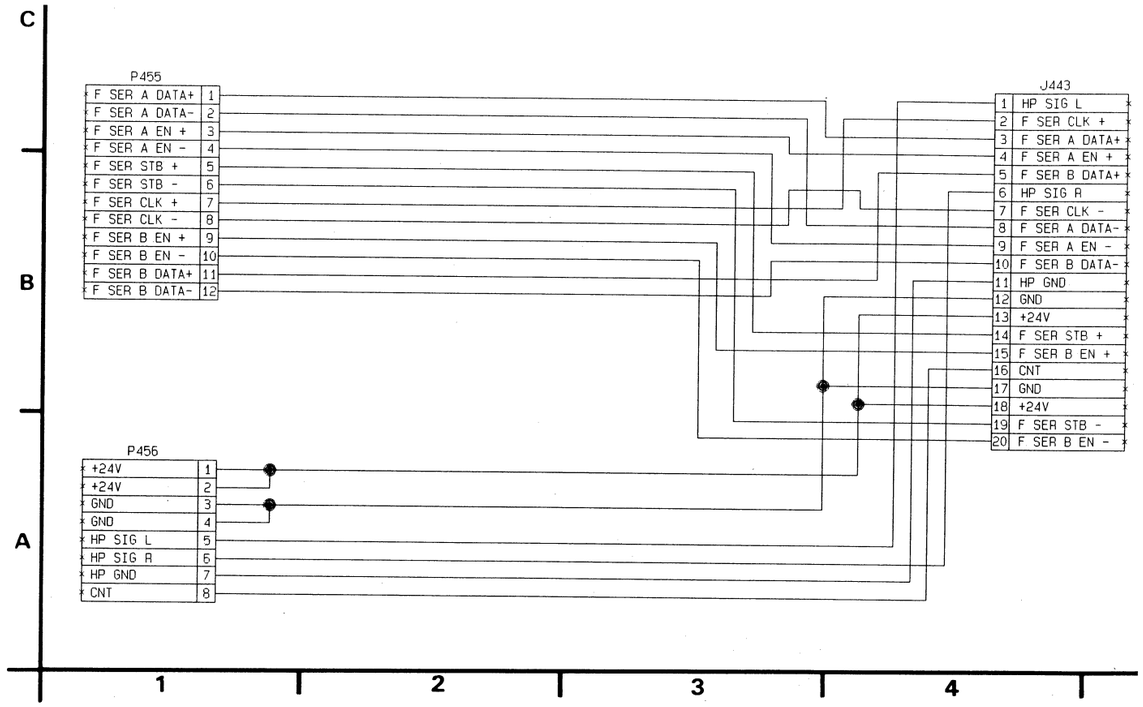

ORDER NO. VQS0281-4
D5

Panasonic

D-3 1/2" DIGITAL

STUDIO VTR

AJ-D350-P/E

NTSC/PAL

Operating Instructions & Service Manual

V. 5-0

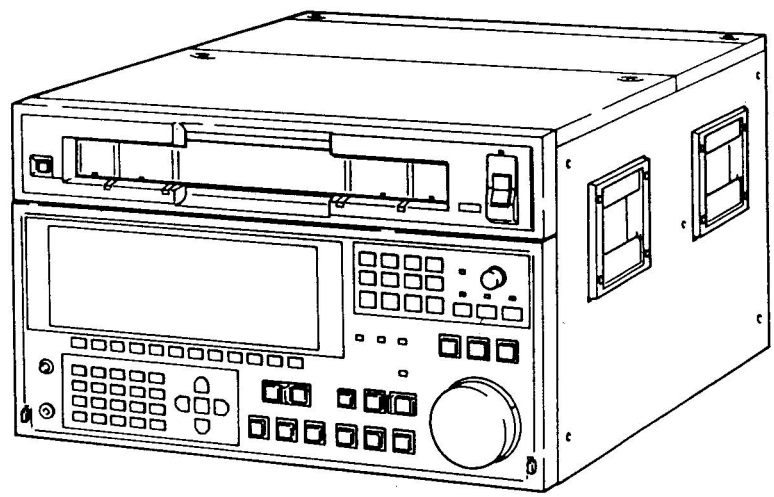

© 1995 Matsushita Electric Corporation of America.
All rights reserved. Unauthorized copying and distribution is a violation of law.

Broadcast Systems

FILE NO. VSD9106M001-5

REMOTE JACK 2 SCHEMATIC DIAGRAM

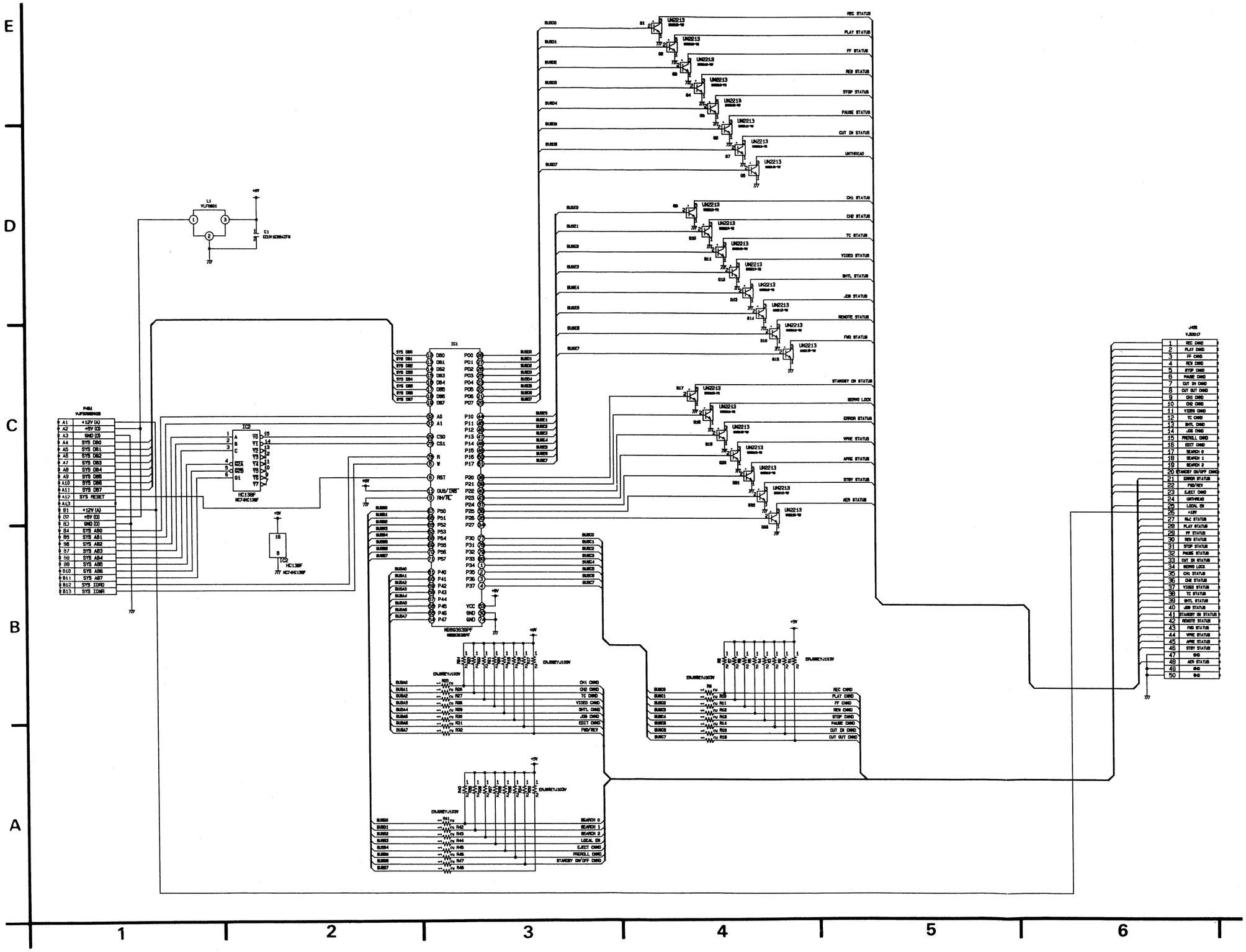

TENSION I/F SCHEMATIC DIAGRAM

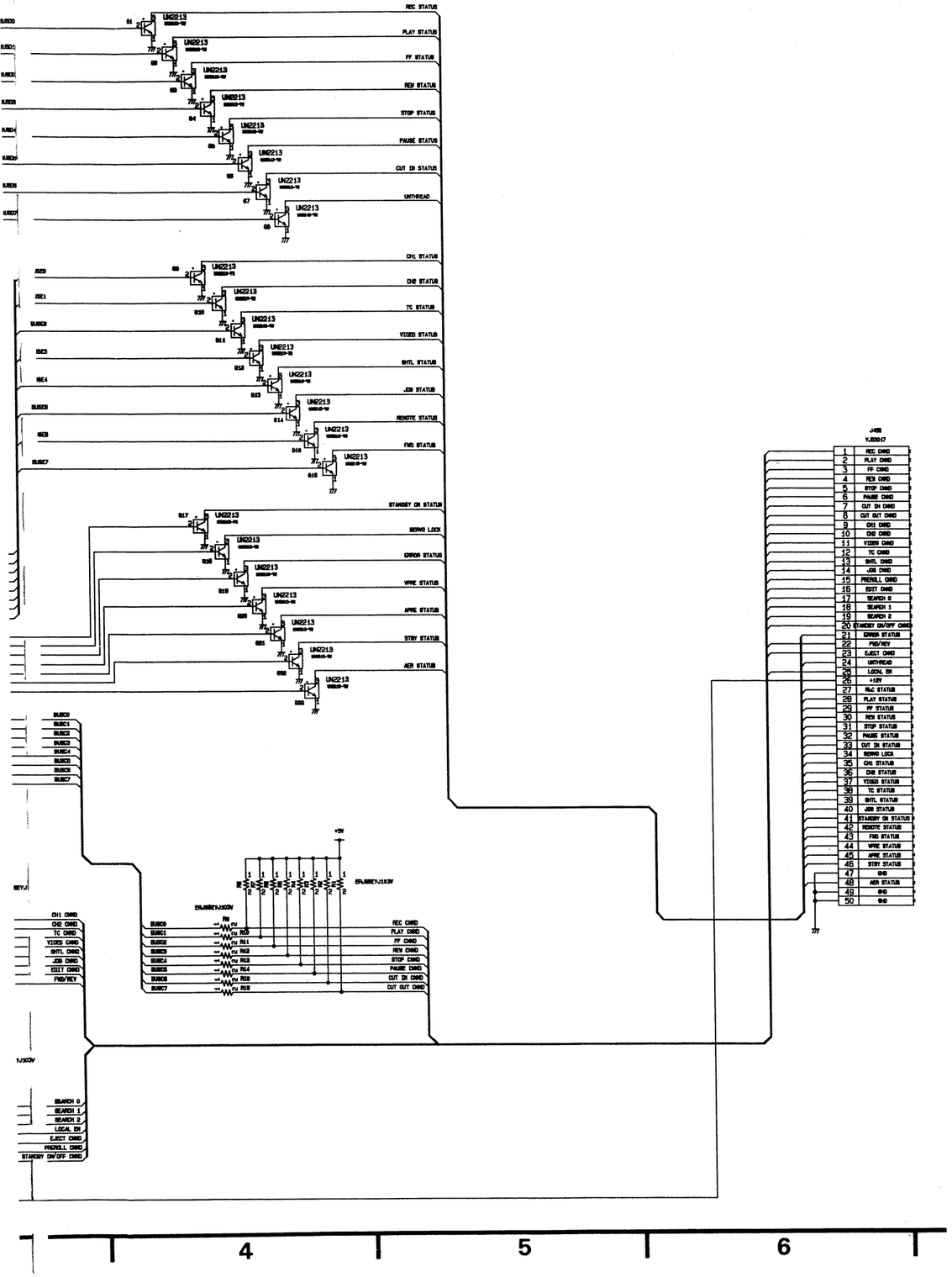

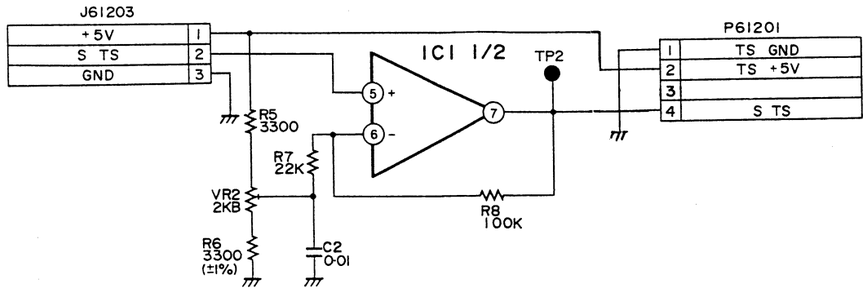

HEADPHONES JACK (1) SCHEMATIC DIAGRAM

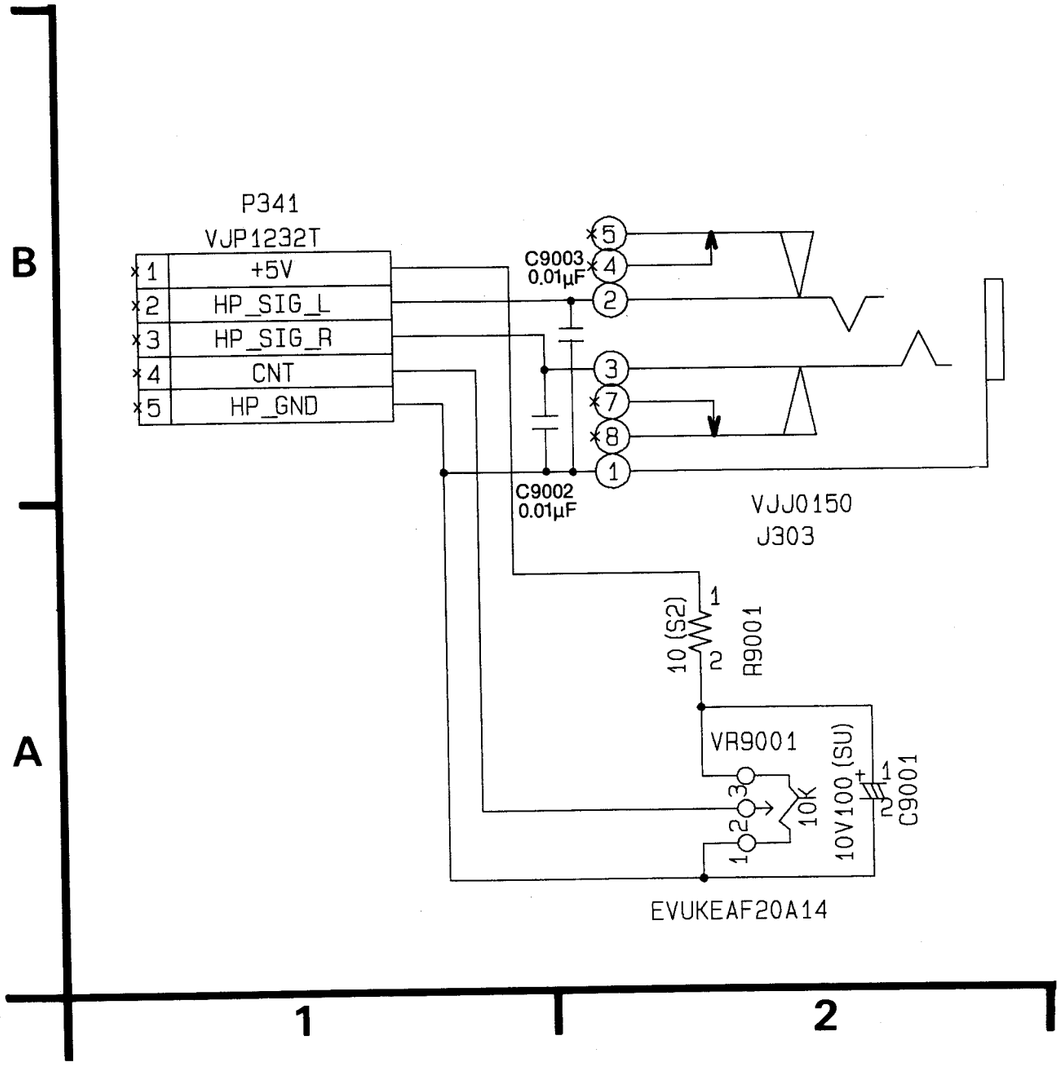

POWER LED SCHEMATIC DIAGRAM

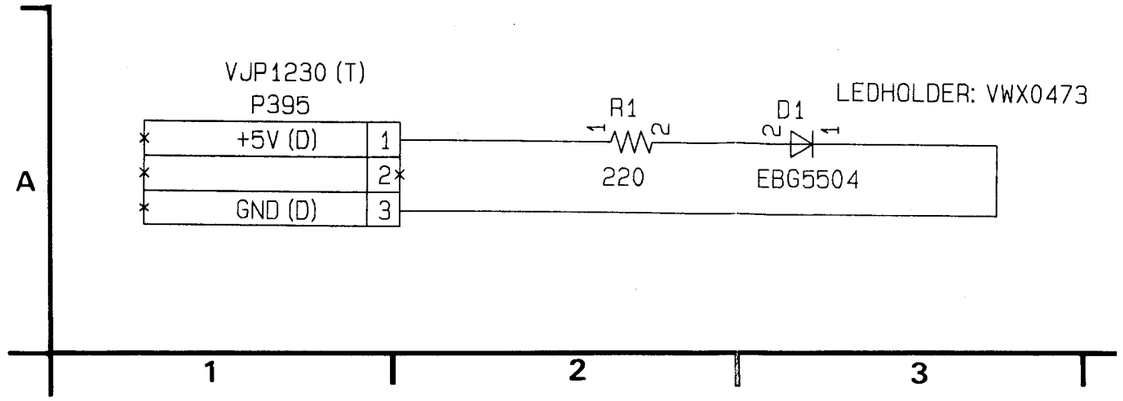

EJECT SCHEMATIC DIAGRAM

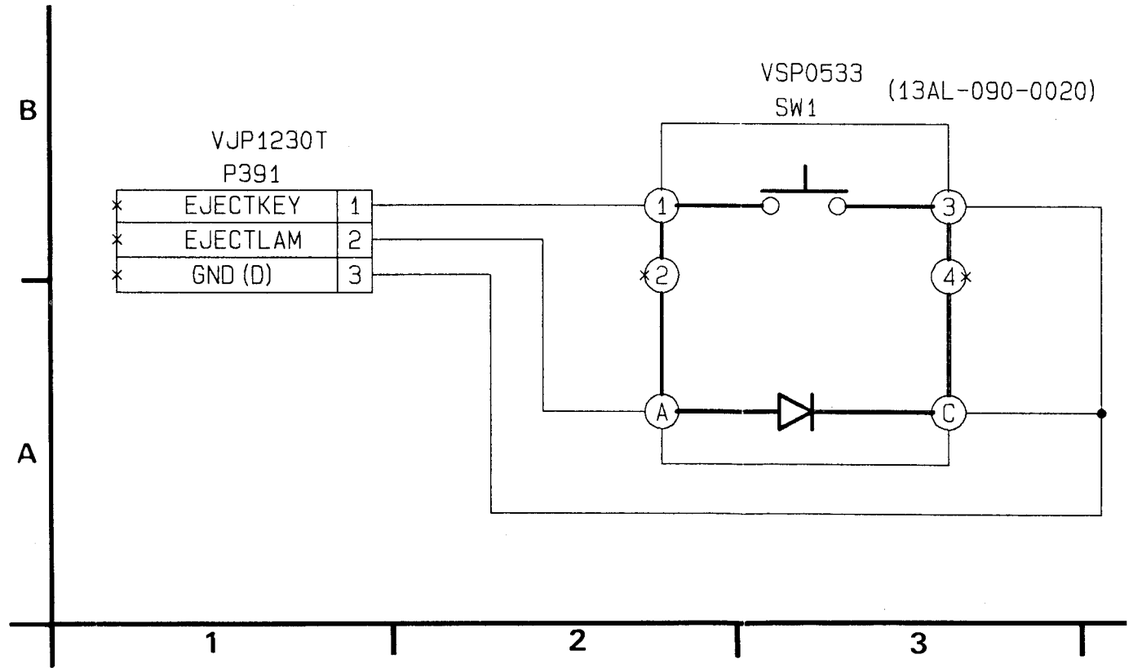

A/C H

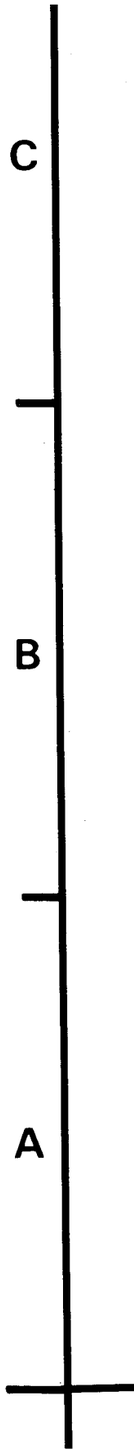

POWER LED SCHEMATIC DIAGRAM

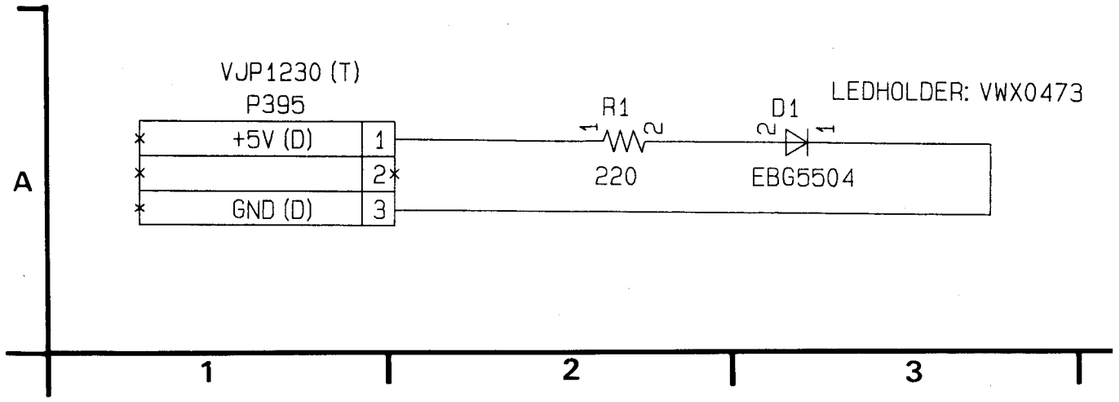

EJECT SCHEMATIC DIAGRAM

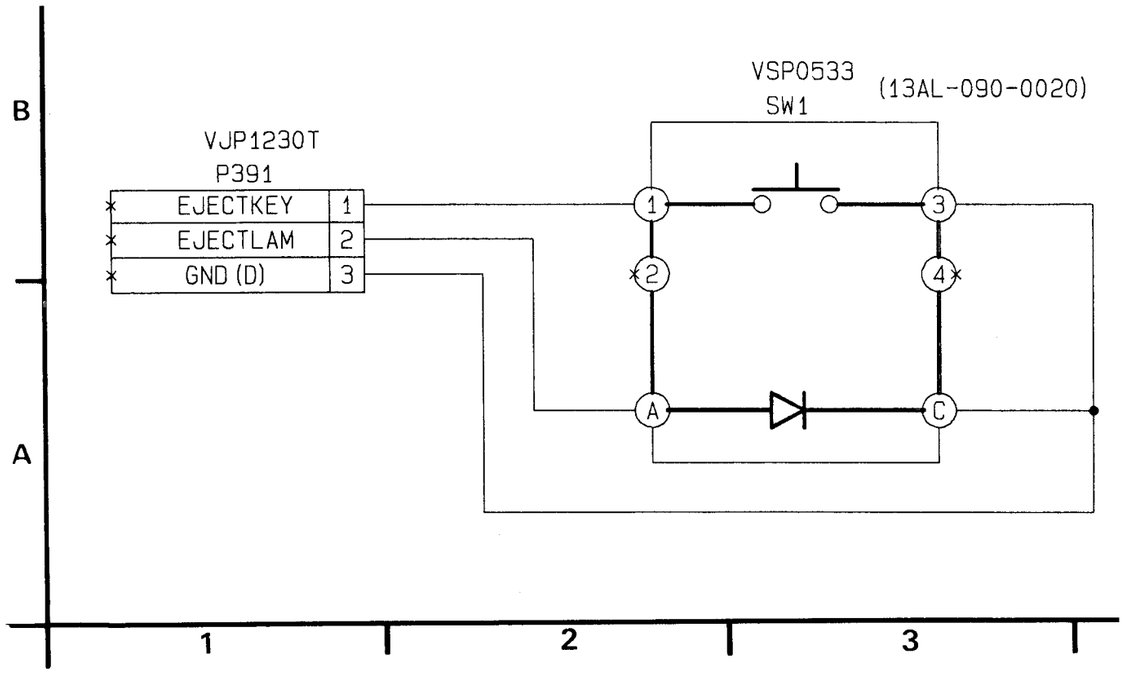

A/C HEAD I/F SCHEMATIC DIAGRAM

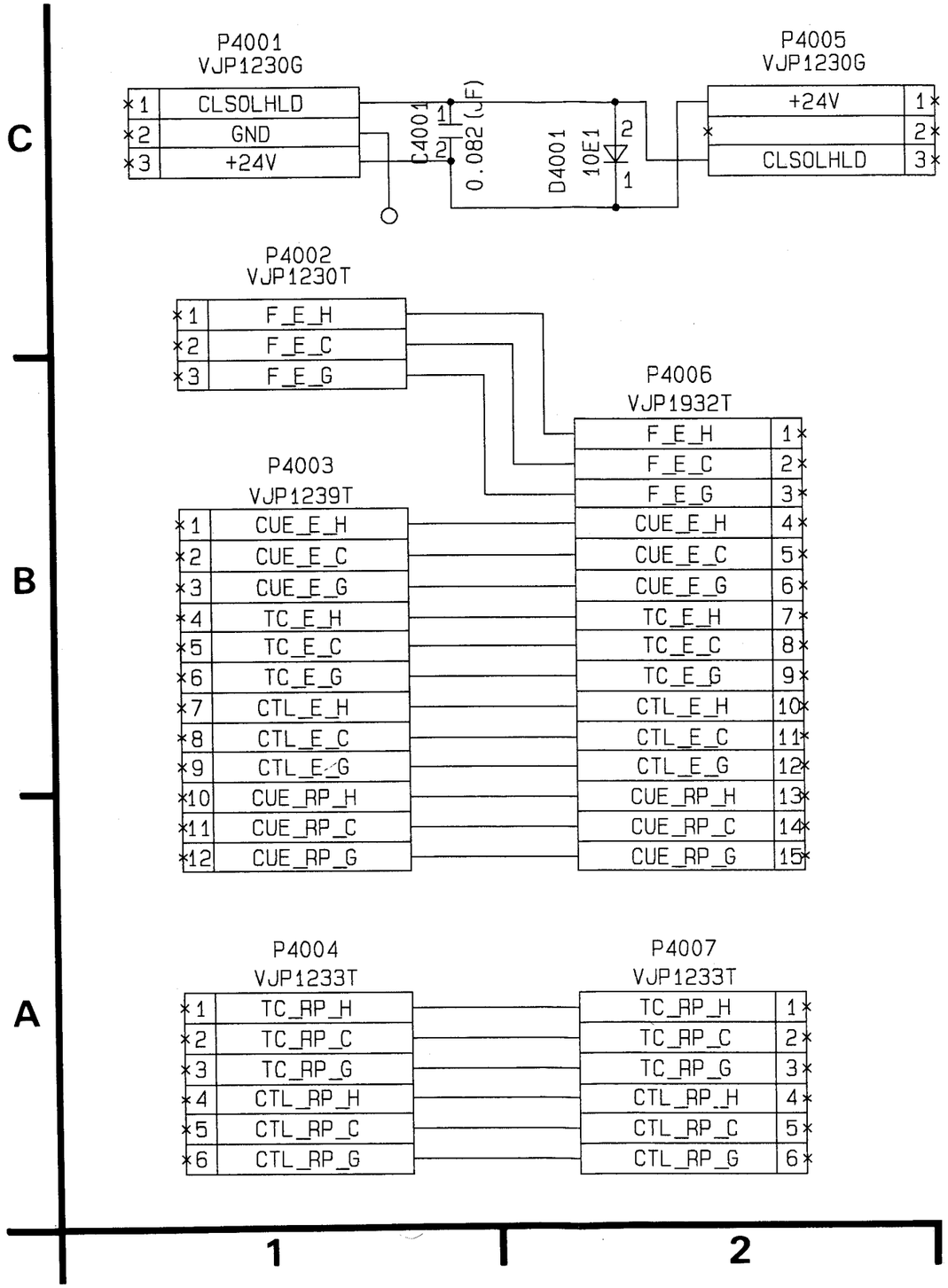

MECH I/F SCHEMATIC DIAGRAM

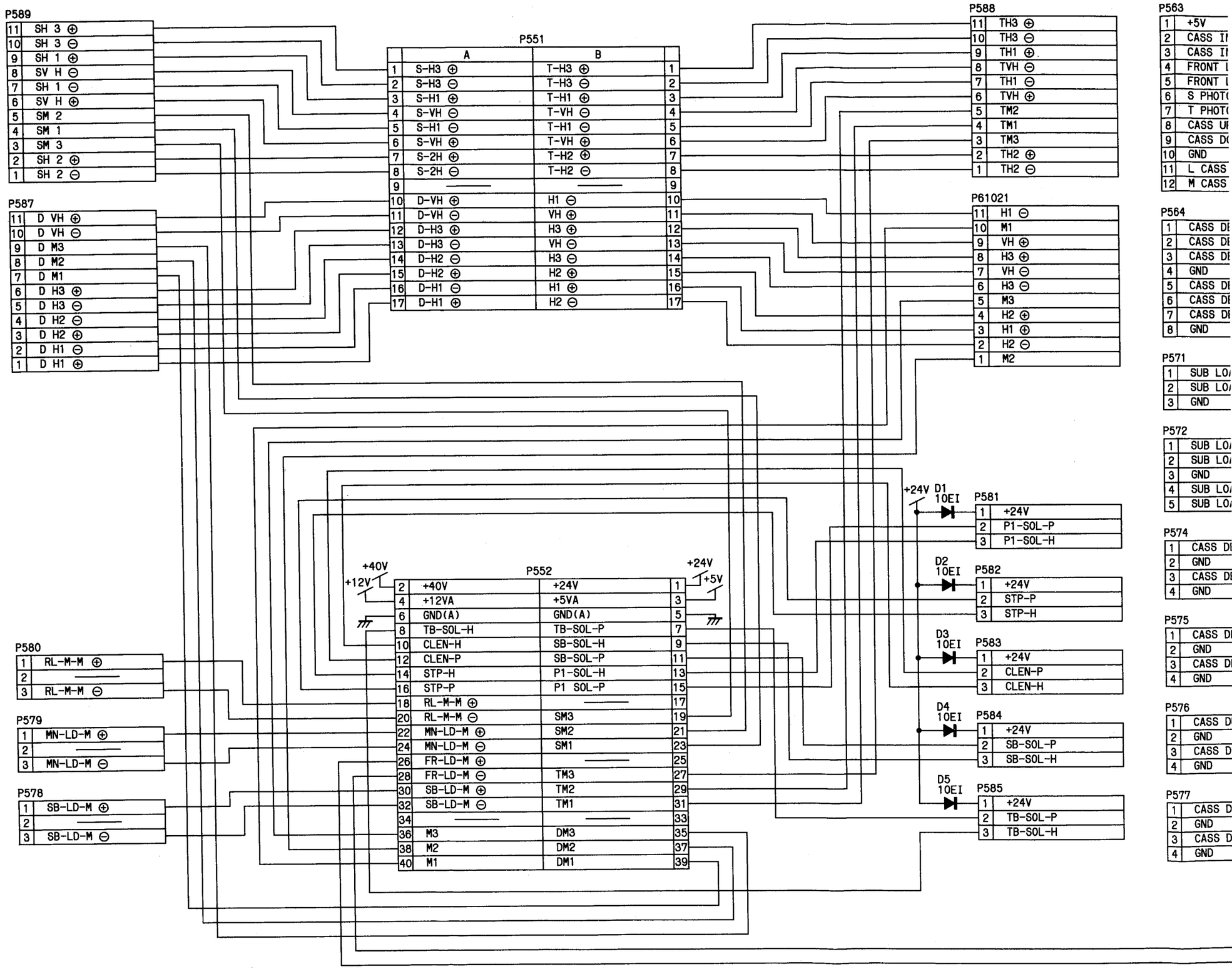

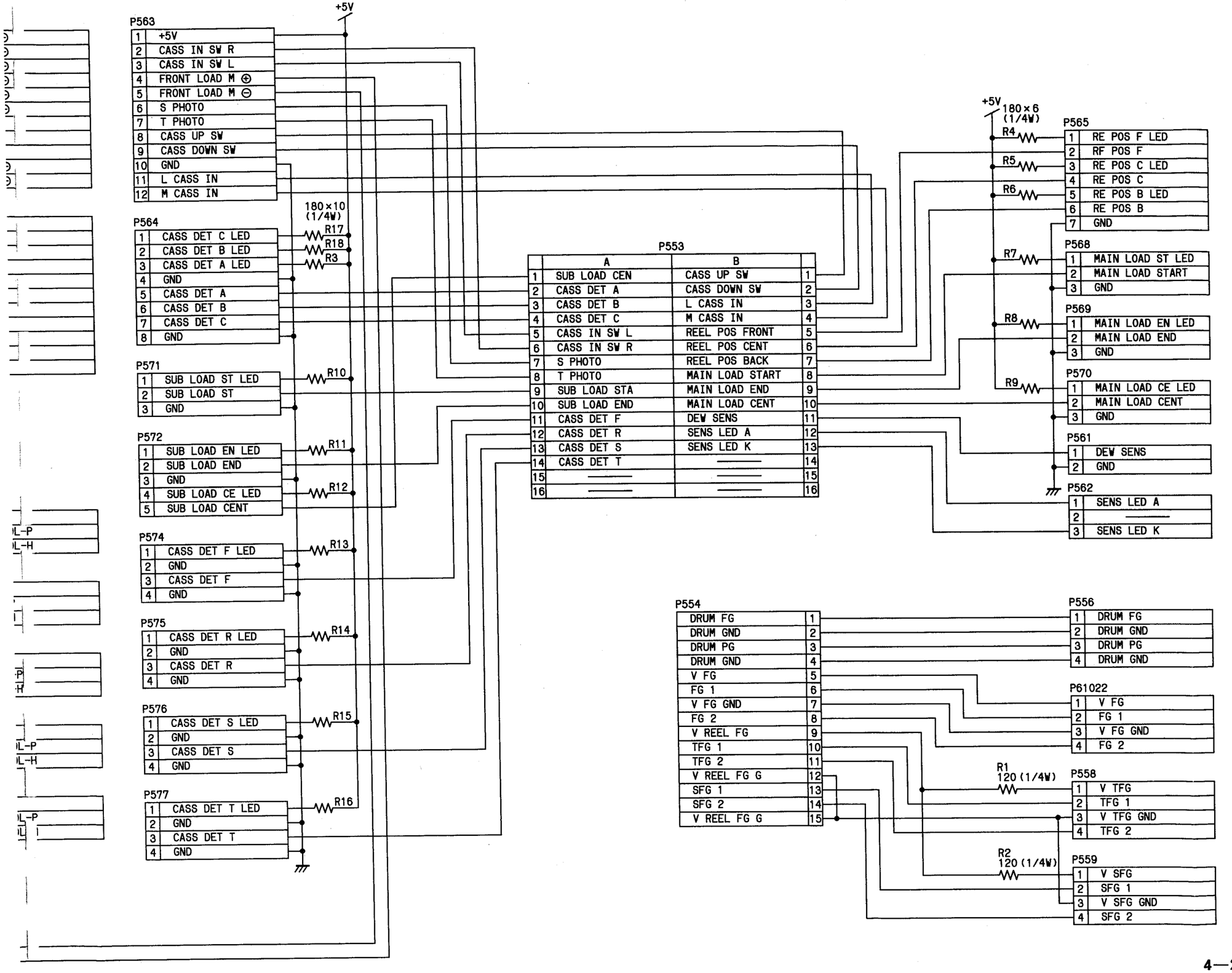
P563
1 +5V
2 CASS IN SW R
3 CASS IN SW L
4 FRONT LOAD M ⊕
5 FRONT LOAD M ⊖
6 S PHOTO
7 T PHOTO
8 CASS UP SW
9 CASS DOWN SW
10 GND
11 L CASS IN
12 M CASS IN
+5V
P564
1 CASS DET C LED
2 CASS DET B LED
3 CASS DET A LED
4 GND
5 CASS DET A
6 CASS DET B
7 CASS DET C
8 GND
180×10 (1/4W)
R17
R18
R3
P571
1 SUB LOAD ST LED
2 SUB LOAD ST
3 GND
R10
P572
1 SUB LOAD EN LED
2 SUB LOAD END
3 GND
4 SUB LOAD CE LED
5 SUB LOAD CENT
R11
R12
P574
1 CASS DET F LED
2 GND
3 CASS DET F
4 GND
R13
P575
1 CASS DET R LED
2 GND
3 CASS DET R
4 GND
R14
P576
1 CASS DET S LED
2 GND
3 CASS DET S
4 GND
R15
P577
1 CASS DET T LED
2 GND
3 CASS DET T
4 GND
R16
P553
A B
1 SUB LOAD CEN CASS UP SW 1
2 CASS DET A CASS DOWN SW 2
3 CASS DET B L CASS IN 3
4 CASS DET C M CASS IN 4
5 CASS IN SW L REEL POS FRONT 5
6 CASS IN SW R REEL POS CENT 6
7 S PHOTO REEL POS BACK 7
8 T PHOTO MAIN LOAD START 8
9 SUB LOAD STA MAIN LOAD END 9
10 SUB LOAD END MAIN LOAD CENT 10
11 CASS DET F DEW SENS 11
12 CASS DET R SENS LED A 12
13 CASS DET S SENS LED K 13
14 CASS DET T 14
15 15
16 16
+5V
180×6 (1/4W)
R4
R5
R6
P565
1 RE POS F LED
2 RF POS F
3 RE POS C LED
4 RE POS C
5 RE POS B LED
6 RE POS B
7 GND
R7
P568
1 MAIN LOAD ST LED
2 MAIN LOAD START
3 GND
R8
P569
1 MAIN LOAD EN LED
2 MAIN LOAD END
3 GND
R9
P570
1 MAIN LOAD CE LED
2 MAIN LOAD CENT
3 GND
P561
1 DEW SENS
2 GND
P562
1 SENS LED A
2
3 SENS LED K
P554
DRUM FG 1
DRUM GND 2
DRUM PG 3
DRUM GND 4
V FG 5
FG 1 6
V FG GND 7
FG 2 8
V REEL FG 9
TFG 1 10
TFG 2 11
V REEL FG G 12
SFG 1 13
SFG 2 14
V REEL FG G 15
P556
1 DRUM FG
2 DRUM GND
3 DRUM PG
4 DRUM GND
P61022
1 V FG
2 FG 1
3 V FG GND
4 FG 2
R1
120 (1/4W)
P558
1 V TFG
2 TFG 1
3 V TFG GND
4 TFG 2
R2
120 (1/4W)
P559
1 V SFG
2 SFG 1
3 V SFG GND
4 SFG 2

L MOTHER (P001, P002) SCHEMATIC DIAGRAM (1/7) FOR L1

P001
HIROSE PCN13-96S-2.54DSA
L 1

	A	FROM / TO						B	FROM / TO						C	FROM / TO					
1	GND (A)					GND	1	GND (A)					GND	1	GND (A)						GND
2	+12V (A)					+12V (A)	2	+12V (A)					+12V (A)	2	+12V (A)						+12V (A)
3	-12V (A)					-12V (A)	3	-12V (A)					-12V (A)	3	-12V (A)						-12V (A)
4	GND (A)					GND	4	GND (A)					GND	4	GND (A)						GND
5	+8V (un)					+8V (UN)	5	+8V (un)					+8V (UN)	5	+8V (un)						+8V (UN)
6	-8V (un)					-8V (UN)	6	-8V (un)					-8V (UN)	6	-8V (un)						-8V (UN)
7	+15V (un)					+15V (UN)	7	+15V (un)					+15V (UN)	7	+15V (un)						+15V (UN)
8	-15V (un)					-15V (UN)	8	-15V (un)					-15V (UN)	8	-15V (un)						-15V (UN)
9	GND (A)					GND	9	GND (A)					GND	9	GND (A)						GND
10	CH1 LINE IN GND	P015-3				CH1_IN_G	10	CH1 LINE IN C	P015-2				CH1_IN_C	10	CH1 LINE IN H	P015-1					CH1_IN_H
11	CH2 LINE IN GND	P015-6				CH2_IN_G	11	CH2 LINE IN C	P015-5				CH2_IN_C	11	CH2 LINE IN H	P015-4					CH2_IN_H
12	CH3 LINE IN GND	P015-9				CH3_IN_G	12	CH3 LINE IN C	P015-8				CH3_IN_C	12	CH3 LINE IN H	P015-7					CH3_IN_H
13	CH4 LINE IN GND	P015-12				CH4_IN_G	13	CH4 LINE IN C	P015-11				CH4_IN_C	13	CH4 LINE IN H	P015-10					CH4_IN_H
14	GND (A)					GND	14	GND (A)					GND	14	GND (A)						GND
15	CH1 LINE OUT	P010-1				CH1_OUT	15	CH2 LINE OUT	P010-3				CH2_OUT	15	CH3 LINE OUT	P010-5					CH3_OUT
16	CH1 LINE OUT GND	P010-2				CH1OUT_G	16	CH2 LINE OUT GND	P010-4				CH2OUT_G	16	CH3 LINE OUT GND	P010-6					CH3OUT_G
17	CH4 LINE OUT	P010-7				CH4_OUT	17	MONI L OUT	P010-9				MONI_L_O	17	MONI R OUT	P010-11					MONI_R_O
18	CH4 LINE OUT GND	P010-8				CH4OUT_G	18	MONI L OUT GND	P010-10				MONI_L_G	18	MONI R OUT GND	P010-12					MONI_R_G
19	GND (A)					GND	19	GND (A)					GND	19	GND (A)						GND
20							20							20							
21							21	AMCK	P003-21B				+AMCK	21							
22							22	$\overline{\text{AMCK}}$	P003-22B				-AMCK	22							
23							23	BCK	P003-23B	P019-28A			+BCK	23	WCK	P003-21C	P019-27A				WCK
24	AV AB 13	P003-24A	P005-24A	P007-24A	P024-16A	AVAB_13	24	AV AB 14	P003-24B	P005-24B	P007-24B	P024-15A	AVAB_14	24	AV AB 15	P003-24C	P005-24C	P007-24C	P024-14A		AVAB_15
25	AV AB 10	P003-25A	P005-25A	P007-25A	P024-19A	AVAB_10	25	AV AB 11	P003-25B	P005-25B	P007-25B	P024-18A	AVAB_11	25	AV AB 12	P003-25C	P005-25C	P007-25C	P024-17A		AVAB_12
26	AV AD 7	P003-26A	P005-26A	P007-26A	P024-23A	AVAD_7	26	AV AB 8	P003-26B	P005-26B	P007-26B	P024-21A	AVAB_8	26	AV AB 9	P003-26C	P005-26C	P007-26C	P024-20A		AVAB_9
27	AV AD 4	P003-27A	P005-27A	P007-27A	P024-26A	AVAD_4	27	AV AD 5	P003-27B	P005-27B	P007-27B	P024-25A	AVAD_5	27	AV AD 6	P003-27C	P005-27C	P007-27C	P024-24A		AVAD_6
28	AV AD 1	P003-28A	P005-28A	P007-28A	P024-29A	AVAD_1	28	AV AD 2	P003-28B	P005-28B	P007-28B	P024-28A	AVAD_2	28	AV AD 3	P003-28C	P005-28C	P007-28C	P024-27A		AVAD_3
29	AV RD	P003-29A	P005-29A	P007-29A	P024-12A	AV_RD	29	AV ALE	P003-29B	P005-29B	P007-29B	P024-22A	AV_ALE	29	AV AD 0	P003-29C	P005-29C	P007-29C	P024-30A		AVAD_0
30							30	AV RESET	P003-30B	P005-30B	P007-30B	P024-9A	AV_RESET	30	AV WR	P003-30C	P005-30C	P007-30C	P024-11A		AV_WR
31							31							31							
32	GND (D)					GND	32	GND (D)					GND	32	GND (D)						GND

P002
HIROSE PCN13-96S-2.54DSA
L 1

	A	FROM / TO						B	FROM / TO						C	FROM / TO					
1	GND (D)					GND	1	GND (D)					GND	1	GND (D)						GND
2	DSD 1	P024-28B				DSD_1	2							2	DSD 3	P024-27B					DSD_3
3							3	DSD L	P024-26B				DSD_L	3							
4	ASD 1	P024-30B				ASD_1	4							4	ASD 3	P024-29B					ASD_3
5							5							5							
6							6							6							
7							7							7							
8							8							8							
9							9							9	SYNC BLNK	P008-9C					SYNC_BL
10							10							10	BURST FLAG	P008-10C					BURST_FL
11	AV DATA 5	P008-11A				AVDATA_5	11	AV DATA 6	P008-11B				AVDATA_6	11	AV DATA 7	P008-11C					AVDATA_7
12	AV DATA 2	P008-12A				AVDATA_2	12	AV DATA 3	P008-12B				AVDATA_3	12	AV DATA 4	P008-12C					AVDATA_4
13	AV DATA -1	P008-13A				AVDATA-1	13	AV DATA 0	P008-13B				AVDATA_0	13	AV DATA 1	P008-13C					AVDATA_1
14	AV CLK 0	P008-14A				AV_CLKO	14	$\overline{\text{AV CLK 0}}$	P008-14B				-AV_CLKO	14	AV DATA -2	P008-14C					AVDATA-2
15	GND (A)					GND	15	GND (A)					GND	15	GND (A)						GND
16	REC INPUT VIDEO	P012-1				REC_INPU	16	RF WFM	P012-3				RF_WFM	16	WF CTL	P012-5					WF_CTL
17	REC INPUT VIDEO GND	P012-2				REC_V_G	17	RF WFM GND	P012-4				RF_WFM_G	17	WF CTL GND	P012-6					WF_CTL_G
18	VIDEO 1 OUT	P014-1				VIDEO1_O	18	VIDEO 2 OUT	P014-3				VIDEO2_O	18	VIDEO 3 OUT	P014-5					VIDEO3_O
19	VIDEO 1 OUT GND	P014-2				VIDEO1_G	19	VIDEO 2 OUT GND	P014-4				VIDEO2_G	19	VIDEO 3 OUT GND	P014-6					VIDEO3_G
20	WFM OUT	P014-7				WFM_OUT	20	CHAR SIG	P019-12A				CHAR_SIG	20	CHAR GATE	P019-11A					CHAR_GA
21	WFM OUT GND	P014-8				WFM_GND	21							21							
22	GND (A)					GND	22							22							
23							23							23							
24							24							24							
25							25							25							
26							26							26							
27	GND (D)					GND	27	GND (D)					GND	27	GND (D)						GND
28	+5V (D)					+5V (D1)	28	+5V (D)					+5V (D1)	28	+5V (D)						+5V (D1)
29	+5V (D)					+5V (D1)	29	+5V (D)					+5V (D1)	29	+5V (D)						+5V (D1)
30	-5V (D)					-5V (D)	30	-5V (D)					-5V (D)	30	-5V (D)						-5V (D)
31	GND (D)					GND	31	GND (D)					GND	31	GND (D)						GND
32	GND (D)					GND	32	GND (D)					GND	32	GND (D)						GND

L MOTHER (P003, P004) SCHEMATIC DIAGRAM (2/7) FOR L2

P003
HIROSE PCN13-96S-2.54DSA
L 2

	A	FROM / TO						B	FROM / TO						C	FROM / TO					
1	GND (A)					GND	1	GND (A)					GND	1	GND (A)					GND
2	+12V (A)					+12V (A)	2	+12V (A)					+12V (A)	2	+12V (A)					+12V (A)
3	-12V (A)					-12V (A)	3	-12V (A)					-12V (A)	3	-12V (A)					-12V (A)
4	GND (A)					GND	4	GND (A)					GND	4	GND (A)					GND
5	DIF CK	P032-1				DIFCK	5	MCK	P005-6B				MCK	5	PB RST	P005-5C	P019-30A			PB_RST
6	DIF CK	P032-2				-DIFCK	6	MCK	P005-6B				-MCK	6	PB FNO	P005-6C				PB_FNO
7	INCOM HR	P007-7A				INCOM_HR	7	INCOM REC SW	P007-7B				INC_R_SW	7	PB 5F	P005-7C	P024-18B			PB_5F
8	INCOM FNO	P007-8A				INCOM_F0	8	INCOM FN 1	P007-8B				INCOM_F1	8	INCOM FN 2	P007-8C				INCOM_F2
9	BYP1 4FSC	P007-9A				BYP1_4F	9	PCON CLK	P007-9B	P005-13B			PCON_CLK	9	REC FNO DL	P006-9C				FNO_DL
10	BYP1 4FSC	P007-10A				-BYP1_4F	10	PCON CLK GND	P007-10B	P005-14B			PCON_GND	10	REC FN 0	P005-10C				REC_FN0
11	REF H0	P007-11A				REF_H0	11	REF FRM	P007-11B				REF_FRM	11	REC CF	P007-11C				REF_CF
12	REF CS	P007-12A				REF_CS	12	REF VS	P007-12B				REF_VS	12	REC CLK	P007-12C				REF_CLK
13	H RST	P007-13A				H_RST	13	FSA	P019-21A				FSA	13	REC CLK	P007-13C				-REF_CLK
14	INCOM CS	P007-14A				INCOM_CS	14	INCOM LALT	P007-14B				INC_LALT	14	INCOM SC	P007-14C				INCOM_SC
15	BYP2 4FSC	P005-15A				BYP2_4F	15	BYP2 2FSC	P005-15B				+BYP2_2F	15	BYP3 WCK	P005-15C				+BYP3WCK
16	BYP2 4FSC	P005-16A				-BYP2_4F	16	BYP2 2FSC	P005-16B				-BYP2_2F	16	BYP3 WCK	P005-16C				-BYP3WCK
17	AU DATA IN 5	P006-12C	P024-11B			AUDAIN5	17	AU DATA IN 6	P006-13A	P024-10B			AUDAIN6	17	AU DATA IN 7	P006-13B	P024-9B			AUDAIN7
18	AU DATA IN 2	P006-11C	P024-14B			AUDAIN2	18	AU DATA IN 3	P006-12A	P024-13B			AUDAIN3	18	AU DATA IN 4	P006-12B	P024-12B			AUDAIN4
19	AU DATA GND	P006-13C				AUDA_GND	19	AU DATA IN 0	P006-11A	P024-16B			AUDAIN0	19	AU DATA IN 1	P006-11B	P024-15B			AUDAIN1
20							20	DBCK	P032-4				DBCK	20	DBCK	P032-5				-DBCK
21							21	AMCK	P001-21B				+AMCK	21	WCK	P001-23C	P019-27A			WCK
22							22	AMCK	P001-22B				-AMCK	22	FS 128	P019-29A				FS128
23	FSD	P019-22A				FSD	23	BCK	P001-23B	P019-28A			+BCK	23	SEL REC SW	P005-23C				SEL_R_SW
24	AV AB 13	P001-24A	P005-24A	P007-24A	P024-16A	AVAB_13	24	AV AB 14	P001-24B	P005-24B	P007-24B	P024-15A	AVAB_14	24	AV AB 15	P001-24C	P005-24C	P007-24C	P024-14A	AVAB_15
25	AV AB 10	P001-25A	P005-25A	P007-25A	P024-19A	AVAB_10	25	AV AB 11	P001-25B	P005-25B	P007-25B	P024-18A	AVAB_11	25	AV AB 12	P001-25C	P005-25C	P007-25C	P024-17A	AVAB_12
26	AV AD 7	P001-26A	P005-26A	P007-26A	P024-23A	AVAD_7	26	AV AB 8	P001-26B	P005-26B	P007-26B	P024-21A	AVAB_8	26	AV AB 9	P001-26C	P005-26C	P007-26C	P024-20A	AVAB_9
27	AV AD 4	P001-27A	P005-27A	P007-27A	P024-26A	AVAD_4	27	AV AD 5	P001-27B	P005-27B	P007-27B	P024-25A	AVAD_5	27	AV AD 6	P001-27C	P005-27C	P007-27C	P024-24A	AVAD_6
28	AV AD 1	P001-28A	P005-28A	P007-28A	P024-29A	AVAD_1	28	AV AD 2	P001-28B	P005-28B	P007-28B	P024-28A	AVAD_2	28	AV AD 3	P001-28C	P005-28C	P007-28C	P024-27A	AVAD_3
29	AV RD	P001-29A	P005-29A	P007-29A	P024-12A	AV_RD	29	AV ALE	P001-29B	P005-29B	P007-29B	P024-22A	AV_ALE	29	AV AD 0	P001-29C	P005-29C	P007-29C	P024-30A	AVAD_0
30	ST 0	P019-26A				STO	30	AV RESET	P001-30B	P005-30B	P007-30B	P024-9A	AV_RESET	30	AV WR	P001-30C	P005-30C	P007-30C	P024-11A	AV_WR
31	ST 1	P019-25A				ST1	31	ST 2	P019-24A				ST2	31	ST 3	P019-23A				ST3
32	GND (D)					GND	32	GND (D)					GND	32	GND (D)					GND

P004
HIROSE PCN13-96S-2.54DSA
L 2

	A	FROM / TO						B	FROM / TO						C	FROM / TO					
1	GND (D)					GND	1	GND (D)					GND	1	GND (D)					GND
2	DV DATA IN 5	P017-3				DVDAIN5	2	DV DATA IN 6	P017-2				DVDAIN6	2	DV DATA IN 7	P017-1				DVDAIN7
3	DV DATA IN 2	P017-6				DVDAIN2	3	DV DATA IN 3	P017-5				DVDAIN3	3	DV DATA IN 4	P017-4				DVDAIN4
4	DV DATA IN -1	P017-9				DVDAIN-1	4	DV DATA IN 0	P017-8				DVDAIN0	4	DV DATA IN 1	P017-7				DVDAIN1
5	DV CLK I	P017-11				DV_CLKI	5	DV CLK I	P017-12				-DV_CLKI	5	REF REC SW	P007-17A				REF_R_SW
6	4FSC CLK	P012-7				4FSC	6	REC COMP SYNC	P019-7A				R_COM_SY	6	REC VITC	P019-9A				REC_VITC
7	4FSC CLK GND	P012-8				4FSC_G	7	REC V SYNC	P019-6A				REC_VS	7	VITC GATE	P019-8A				VITCGATE
8	AV CS	P019-29B				AV_CS	8	REC H SW	P019-13A				REC_H_SW	8	REC CF	P019-10A				REC_CF
9	AV CS	P019-28B				-AV_CS	9	REC H SW GND					GND	9	EXT CF IN	P007-20B	P029-5			EXT_CF
10	AV DATA IN 5	P019-9B				AVDAIN5	10	AV DATA IN 6	P019-6B				AVDAIN6	10	AV DATA IN 7	P019-4B				AVDAIN7
11	AV DATA IN 5	P019-7B				-AVDAIN5	11	AV DATA IN 6	P019-5B				-AVDAIN6	11	AV DATA IN 7	P019-3B				-AVDAIN7
12	AV DATA IN 2	P019-14B				AVDAIN2	12	AV DATA IN 3	P019-12B				AVDAIN3	12	AV DATA IN 4	P019-10B				AVDAIN4
13	AV DATA IN 2	P019-13B				-AVDAIN2	13	AV DATA IN 3	P019-11B				-AVDAIN3	13	AV DATA IN 4	P019-9B				-AVDAIN4
14	AV CLK I	P019-20B				AV_CLKI	14	AV DATA IN 0	P019-18B				AVDAIN0	14	AV DATA IN 1	P019-16B				AVDAIN1
15	AV CLK I	P019-19B				-AV_CLKI	15	AV DATA IN 0	P019-17B				-AVDAIN0	15	AV DATA IN 1	P019-15B				-AVDAIN1
16	AV SC	P019-27B				AV_SC	16	AV VS	P019-30B				AV_VS	16	AV LALT	P019-25B				AV_LALT
17	AV SC	P019-26B				-AV_SC	17	AV FRM	P019-24B				AV_FRM	17	AV CF	P019-23B				AV_CF
18	AV H0	P019-22B				AV_H0	18	FRY ERASE	P018-12				FRYERASE	18	CH0 REC	P018-1				CH0_REC
19	AV H0	P019-21B				-AV_H0	19	FV/2	P024-7B	P007-15A			FV/2	19	CH1 REC	P018-2				CH1_REC
20	CH0 REC D	P018-3				CH0REC_D	20	CH1 REC D	P018-6				CH1_RECD	20	REC CLK	P018-9				REC_CLK
21	CH0 REC D	P018-4				-CH0_R_D	21	CH1 REC D	P018-7				-CH1_R_D	21	REC CLK	P018-10				-REC_CLK
22	CH0 REC D GND	P018-5				CH0_RECG	22	CH1 REC D GND	P018-8				CH1_RECG	22	REC CLK GND	P018-11				REC_CLKG
23	BYP 9	P006-23A	P008-23A			BYP_9	23	BYP 10	P006-23B	P008-23B			BYP_10	23	BYP 11	P006-23C	P008-23C			BYP_11
24	BYP 6	P006-24A	P008-24A			BYP_6	24	BYP 7	P006-24B	P008-24B			BYP_7	24	BYP 8	P006-24C	P008-24C			BYP_8
25	BYP 3	P006-25A	P008-25A			BYP_3	25	BYP 4	P006-25B	P008-25B			BYP_4	25	BYP 5	P006-25C	P008-25C			BYP_5
26	BYP 0	P006-26A	P008-26A			BYP_0	26	BYP 1	P006-26B	P008-26B			BYP_1	26	BYP 2	P006-26C	P008-26C			BYP_2
27	GND (D)					GND	27	GND (D)					GND	27	GND (D)					GND
28	+5V (D)					+5V (D2)	28	+5V (D)					+5V (D2)	28	+5V (D)					+5V (D2)
29	+5V (D)					+5V (D2)	29	+5V (D)					+5V (D2)	29	+5V (D)					+5V (D2)
30	-5V (D)					-5V (D)	30	-5V (D)					-5V (D)	30	-5V (D)					-5V (D)
31	GND (D)					GND	31	GND (D)					GND	31	GND (D)					GND
32	GND (D)					GND	32	GND (D)					GND	32	GND (D)					GND

D C B A

1 2 3 4 5 6

L MOTHER (P005, P006) SCHEMATIC DIAGRAM (3/7) FOR L3

P005
HIROSE PCN13-96S-2.54DSA
L 3

	A	FROM / TO						B	FROM / TO						C	FROM / TO					
1	GND (A)					GND	1	GND (A)					GND	1	GND (A)					GND
2	+12V (A)					+12V (A)	2	+12V (A)					+12V (A)	2	+12V (A)					+12V (A)
3	-12V (A)					-12V (A)	3	-12V (A)					-12V (A)	3	-12V (A)					-12V (A)
4	GND (A)					GND	4	GND (A)					GND	4	GND (A)					GND
5							5	MCK	P003-5B				MCK	5	PB RST	P003-5C	P019-30A			PB_RST
6							6	MCK	P003-6B				-MCK	6	PB FN0	P003-6C				PB_FN0
7	VALID F	P024-19B				VALID_F	7							7	PB 5F	P003-7C	P024-18B			PB_5F
8	FILD	P024-17B				FILD	8	MUTE 12	P024-21B				MUTE_12	8	MUTE 34	P024-20B				MUTE_34
9	SEGU 0	P024-8A				SEG-0	9	SEG - 1	P024-7A				SEG-1	9						
10	SEGM VAGUE	P024-5A				SEG-VAG	10	PB - FN0	P024-6A				PB-FN0	10	REC FN 0	P003-10C				REC_FN0
11	SYNC + CH0	P022-1				SYNC+0	11	SYNC + CH1	P022-4				SYNC+1	11						
12	SYNC - CH0	P022-2				SYNC-0	12	SYNC - CH1	P022-5				SYNC-1	12	PB TP FRAME	P024-4B				PBTP_FRM
13							13	PCON CLK	P007-9B	P003-9B			PCON_CLK	13	PB H SW	P024-3B				PB_H_SW
14							14	PCON CLK GND	P007-10B	P003-10B			PCON_GND	14						
15	BYP2 4FSC	P003-15A				BYP2_4F	15	BYP2 2FSC	P003-15B				+BYP2_2F	15	BYP3 WCK	P003-15C				+BYP3WCK
16	BYP2 4FSC	P003-16A				-BYP2_4F	16	BYP2 2FSC	P003-16B				-BYP2_2F	16	BYP3 WCK	P003-16C				-BYP3WCK
17	TEST EE 2	P018-13	P024-2A			TEST_EE2	17							17						
18	PB DATA CH0	P021-1				+P_DATA0	18	PB DATA CH0	P021-2				-P_DATA0	18	PB DATA CH0 GND	P021-3				P_DATA0G
19	PB CLOCK CH0	P021-4				+P_CLOK0	19	PB CLOCK CH0	P021-5				-P_CLOK0	19	PB CLOCK CH0 GND	P021-6				P_CLOK0G
20	PB DATA CH1	P021-7				+P_DATA1	20	PB DATA CH1	P021-8				-P_DATA1	20	PB DATA CH1 GND	P021-9				P_DATA1G
21	PB CLOCK CH1	P021-10				+P_CLOK1	21	PB CLOCK CH1	P021-11				-P_CLOK1	21	PB CLOCK CH1 GND	P021-12				P_CLOK1G
22	ENV DET CH0	P024-4A				ENV_DET0	22							22						
23	ENV DET CH1	P024-3A				ENV_DET1	23							23	SEL REC SW	P003-23C				SEL_R_SW
24	AV AB 13	P001-24A	P003-24A	P007-24A	P024-16A	AVAB_13	24	AV AB 14	P001-24B	P003-24B	P007-24B	P024-15A	AVAB_14	24	AV AB 15	P001-24C	P003-24C	P007-24C	P024-14A	AVAB_15
25	AV AB 10	P001-25A	P003-25A	P007-25A	P024-19A	AVAB_10	25	AV AB 11	P001-25B	P003-25B	P007-25B	P024-18A	AVAB_11	25	AV AB 12	P001-25C	P003-25C	P007-25C	P024-17A	AVAB_12
26	AV AD 7	P001-26A	P003-26A	P007-26A	P024-23A	AVAD_7	26	AV AB 8	P001-26B	P003-26B	P007-26B	P024-21A	AVAB_8	26	AV AB 9	P001-26C	P003-26C	P007-26C	P024-20A	AVAB_9
27	AV AD 4	P001-27A	P003-27A	P007-27A	P024-26A	AVAD_4	27	AV AD 5	P001-27B	P003-27B	P007-27B	P024-25A	AVAD_5	27	AV AD 6	P001-27C	P003-27C	P007-27C	P024-24A	AVAD_6
28	AV AD 1	P001-28A	P003-28A	P007-28A	P024-29A	AVAD_1	28	AV AD 2	P001-28B	P003-28B	P007-28B	P024-28A	AVAD_2	28	AV AD 3	P001-28C	P003-28C	P007-28C	P024-27A	AVAD_3
29	AV RD	P001-29A	P003-29A	P007-29A	P024-12A	AV_RD	29	AV ALE	P001-29B	P003-29B	P007-29B	P024-22A	AV_ALE	29	AV AD 0	P001-29C	P003-29C	P007-29C	P024-30A	AVAD_0
30							30	AV RESET	P001-30B	P003-30B	P007-30B	P024-9A	AV_RESET	30	AV WR	P001-30C	P003-30C	P007-30C	P024-11A	AV_WR
31							31							31						
32	GND (D)					GND	32	GND (D)					GND	32	GND (D)					GND

P006
HIROSE PCN13-96S-2.54DSA
L 3

	A	FROM / TO						B	FROM / TO						C	FROM / TO					
1	GND (D)					GND	1	GND (D)					GND	1	GND (D)					GND
2	PB DATA 6	P008-2A				PBDATA6	2	PB DATA 7	P008-2B				PBDATA7	2	PB FLAG	P008-2C				PB_FLAG
3	PB DATA 3	P008-3A				PBDATA3	3	PB DATA 4	P008-3B				PBDATA4	3	PB DATA 5	P008-3C				PBDATA5
4	PB DATA 0	P008-4A				PBDATA0	4	PB DATA 1	P008-4B				PBDATA1	4	PB DATA 2	P008-4C				PBDATA2
5	PB HST	P008-5A				PB_HST	5	PB FLDST	P008-5B				PB_FLDST	5	PB CFST	P008-5C				PB_CFST
6	PB FN 0	P008-6A				PB_FN0	6	ERR STRB	P008-6B				ERR_STRB	6						
7	REF HST	P008-7A				REF_HST	7	REF FLDST	P008-7B				REF_FLD	7						
8	REF FN 0	P008-8A				REF_FN0	8	REF FN1	P008-8B				REF_FN1	8	REF FN2	P008-8C				REF_FN2
9	SYS 4FSC	P008-9A				+SYS_4FS	9	SYS 2FSC	P008-9B				+SYS_2FS	9	REC FN0 DL	P003-9C				FN0_DL
10	SYS 4FSC	P008-10A				-SYS_4FS	10	SYS 2FSC	P008-10B				-SYS_2FS	10						
11	AU DATA IN 0	P003-19B	P024-16B			AUDAIN0	11	AU DATA IN 1	P024-15B	P003-19C			AUDAIN1	11	AU DATA IN 2	P003-18A	P024-14B			AUDAIN2
12	AU DATA IN 3	P003-18B	P024-13B			AUDAIN3	12	AU DATA IN 4	P024-12B	P003-18C			AUDAIN4	12	AU DATA IN 5	P003-17A	P024-11B			AUDAIN5
13	AU DATA IN 6	P003-17B	P024-10B			AUDAIN6	13	AU DATA IN 7	P024-9B	P003-17C			AUDAIN7	13	AU DATA GND	P003-19A				AUDA_GND
14							14							14						
15	PBD 12	P024-25B				PBD_12	15	PBD 34	P024-24B				PBD_34	15						
16	STD	P024-23B				ST_0	16	ST FLG	P024-22B				ST_FLG	16	BLK_SYNC	P024-2B				BLK_SYNC
17							17							17						
18							18							18						
19							19							19						
20							20							20						
21							21							21						
22							22							22						
23	BYP 9	P004-23A	P008-23A			BYP_9	23	BYP 10	P004-23B	P008-23B			BYP_10	23	BYP 11	P004-23C	P008-23C			BYP_11
24	BYP 6	P004-24A	P008-24A			BYP_6	24	BYP 7	P004-24B	P008-24B			BYP_7	24	BYP 8	P004-24C	P008-24C			BYP_8
25	BYP 3	P004-25A	P008-25A			BYP_3	25	BYP 4	P004-25B	P008-25B			BYP_4	25	BYP 5	P004-25C	P008-25C			BYP_5
26	BYP 0	P004-26A	P008-26A			BYP_0	26	BYP 1	P004-26B	P008-26B			BYP_1	26	BYP 2	P004-26C	P008-26C			BYP_2
27	GND (D)					GND	27	GND (D)					GND	27	GND (D)					GND
28	+5V (D)					+5V (D3)	28	+5V (D)					+5V (D3)	28	+5V (D)					+5V (D3)
29	+5V (D)					+5V (D3)	29	+5V (D)					+5V (D3)	29	+5V (D)					+5V (D3)
30	-5V (D)					-5V (D)	30	-5V (D)					-5V (D)	30	-5V (D)					-5V (D)
31	GND (D)					GND	31	GND (D)					GND	31	GND (D)					GND
32	GND (D)					GND	32	GND (D)					GND	32	GND (D)					GND

L MOTHER (P007, P008) SCHEMATIC DIAGRAM (4/7) FOR L4

P007
HIROSE PCN13-96S-2.54DSA
L 4

	A	FROM / TO						B	FROM / TO						C	FROM / TO					
1	GND (A)					GND	1	GND (A)					GND	1	GND (A)					GND
2	+12V (A)					+12V(A)	2							2						
3	-12V (A)					-12V(A)	3							3						
4	GND (A)					GND	4							4						
5	+8V (un)					+8V(UN)	5							5						
6	-8V (un)					-8V(UN)	6							6						
7	INCOM HR	P003-7A				INCOM_HR	7	INCOM REC SW	P003-7B				INC_R_SW	7						
8	INCOM FN0	P003-8A				INCOM_F0	8	INCOM FN 1	P003-8B				INCOM_F1	8	INCOM FN2	P003-8C				INCOM_F2
9	BYP1 4FSC	P003-9A				BYP1_4F	9	PCON CLK (4.5M)	P003-9B	P005-13B			PCON_CLK	9	CMPSY	P026-1				CMPSY
10	BYP1 4FSC	P003-10A				-BYP1_4F	10	PCON CLK GND	P003-10B	P005-14B			PCON_GND	10	GND (A)	P026-2				GND_A
11	REF H0	P003-11A				REF_H0	11	REF FRM	P003-11B				REF_FRM	11	REF CF	P003-11C				REF_CF
12	REF CS	P003-12A				REF_CS	12	REF VS	P003-12B				REF_VS	12	REF CLK	P003-12C				REF_CLK
13	H RST	P003-13A				H_RST	13							13	REF CLK	P003-13C				-REF_CLK
14	INCOM CS	P003-14A				INCOM_CS	14	INCOM LALT	P003-14B				INC_LALT	14	INCOM SC	P003-14C				INCOM_SC
15	FV/2	P024-7B	P004-19B			FV/2	15	FV/4	P024-6B				FV/4	15	FV/8	P024-5B				FV/8
16	90Hz/100Hz	P024-8B				90/100HZ	16	CAP FG1	P019-19A				CAP_FG1	16	CAP DIR	P019-20A				CAP_DIR
17	REF REC SW	P004-5C				REF_R_SW	17							17						
18	SPI HD	P019-18A				SPI_HD	18	SPI VD	P019-17A				SPI_VD	18	PB V SYNC	P019-14A				V_SYNC
19	PB COMP SYNC	P019-15A				COMP_SY	19	PB VITC	P019-16A				PB_VITC	19						
20	REF VIDEO IN	P029-1				REF_V_IN	20	EXT CF IN	P029-5	P004-9C			EXT_CF	20	TXD	P036-1				+TXD
21	REF VIDEO IN GND	P029-2				REF_V_G	21	EXT CF IN GND	P029-6				EXT_CF_G	21	TXD	P036-2				-TXD
22	BLACK BURST	P029-3				BLA_BUR	22	CF PULSE	P029-7				CF_PULSE	22	RXD	P036-3				+RXD
23	BLACK BURST GND	P029-4				BLA_GND	23	CF PULSE GND	P029-8				CF_P_GND	23	RXD	P036-4				-RXD
24	AV AB 13	P024-16A	P001-24A	P003-24A	P005-24A	AVAB_13	24	AV AB 14	P024-15A	P001-24B	P003-24B	P005-24B	AVAB_14	24	AV AB 15	P024-14A	P001-24C	P003-24C	P005-24C	AVAB_15
25	AV AB 10	P024-19A	P001-25A	P003-25A	P005-25A	AVAB_10	25	AV AB 11	P024-18A	P001-25B	P003-25B	P005-25B	AVAB_11	25	AV AB 12	P024-17A	P001-25C	P003-25C	P005-25C	AVAB_12
26	AV AD 7	P024-23A	P001-26A	P003-26A	P005-26A	AVAD_7	26	AV AB 8	P024-21A	P001-26B	P003-26B	P005-26B	AVAB_8	26	AV AB 9	P024-20A	P001-26C	P003-26C	P005-26C	AVAB_9
27	AV AD 4	P024-26A	P001-27A	P003-27A	P005-27A	AVAD_4	27	AV AD 5	P024-25A	P001-27B	P003-27B	P005-27B	AVAD_5	27	AV AD 6	P024-24A	P001-27C	P003-27C	P005-27C	AVAD_6
28	AV AD 1	P024-29A	P001-28A	P003-28A	P005-28A	AVAD_1	28	AV AD 2	P024-28A	P001-28B	P003-28B	P005-28B	AVAD_2	28	AV AD 3	P024-27A	P001-28C	P003-28C	P005-28C	AVAD_3
29	AV RD	P024-12A	P001-29A	P003-29A	P005-29A	AV_RD	29	AV ALE	P024-22A	P001-29B	P003-29B	P005-29B	AV_ALE	29	AV AD 0	P024-30A	P001-29C	P003-29C	P005-29C	AVAD_0
30	AV SYS INT	P024-13A				AVSYSINT	30	AV RESET	P024-9A	P001-30B	P003-30B	P005-30B	AV_RESET	30	AV WR	P024-11A	P001-30C	P003-30C	P005-30C	AV_WR
31	AV BUSY	P024-10A				AV_BUSY	31	VCP RESET	P019-5A				VCPRESET	31						
32	GND (D)					GND	32	GND (A)					GND	32	GND (D)					GND

P008
HIROSE PCN13-96S-2.54DSA
L 4

	A	FROM / TO						B	FROM / TO						C	FROM / TO					
1	GND (D)					GND	1	GND (D)					GND	1	GND (D)					GND
2	PB DATA 6	P006-2A				PBDATA6	2	PB DATA 7	P006-2B				PBDATA7	2	PB FLAG	P006-2C				PB_FLAG
3	PB DATA 3	P006-3A				PBDATA3	3	PB DATA 4	P006-3B				PBDATA4	3	PB DATA 5	P006-3C				PBDATA5
4	PB DATA 0	P006-4A				PBDATA0	4	PB DATA 1	P006-4B				PBDATA1	4	PB DATA 2	P006-4C				PBDATA2
5	PB HST	P006-5A				PB_HST	5	PB FLDST	P006-5B				PB_FLDST	5	PB CFST	P006-5C				PB_CFST
6	PB FN 0	P006-6A				PB_FN0	6	ERR STRB	P006-6B				ERR_STRB	6						
7	REF HST	P006-7A				REF_HST	7	REF FLDST	P006-7B				REF_FLD	7						
8	REF FN 0	P006-8A				REF_FN0	8	REF FN1	P006-8B				REF_FN1	8	REF FN 2	P006-8C				REF_FN2
9	SYS 4FSC	P006-9A				+SYS_4FS	9	SYS 2FSC	P006-9B				+SYS_2FS	9	SYNC BLNK	P002-9C				SYNC_BL
10	SYS 4FSC	P006-10A				-SYS_4FS	10	SYS 2FSC	P006-10B				-SYS_2FS	10	BURST FLAG	P002-10C				BURST_FL
11	AV DATA 5	P002-11A				AVDATA_5	11	AV DATA 6	P002-11B				AVDATA_6	11	AV DATA 7	P002-11C				AVDATA_7
12	AV DATA 2	P002-12A				AVDATA_2	12	AV DATA 3	P002-12B				AVDATA_3	12	AV DATA 4	P002-12C				AVDATA_4
13	AV DATA -1	P002-13A				AVDATA-1	13	AV DATA 0	P002-13B				AVDATA_0	13	AV DATA 1	P002-13C				AVDATA_1
14	AV CLK 0	P002-14A				AV_CLKO	14	AV CLK 0	P002-14B				-AV_CLKO	14	AV DATA -2	P002-14C				AVDATA-2
15	DV DATA OUT 5	P027-5				DVDATA5	15	DV DATA OUT 6	P027-3				DVDATA6	15	DV DATA OUT 7	P027-1				DVDATA7
16	DV DATA OUT 5	P027-6				-DVDATA5	16	DV DATA OUT 6	P027-4				-DVDATA6	16	DV DATA OUT 7	P027-2				-DVDATA7
17	DV DATA OUT 2	P028-1				DVDATA2	17	DV DATA OUT 3	P027-9				DVDATA3	17	DV DATA OUT 4	P027-7				DVDATA4
18	DV DATA OUT 2	P028-2				-DVDATA2	18	DV DATA OUT 3	P027-10				-DVDATA3	18	DV DATA OUT 4	P027-8				-DVDATA4
19	DV DATA OUT-1	P028-7				DVDATA-1	19	DV DATA OUT 0	P028-5				DVDATA0	19	DV DATA OUT 1	P028-3				DVDATA1
20	DV DATA OUT-1	P028-8				-DVDA-1	20	DV DATA OUT 0	P028-6				-DVDATA0	20	DV DATA OUT 1	P028-4				-DVDATA1
21							21	DV CLK 0	P028-11				DV_CLKO	21	DV DATA OUT -2	P028-9				DVDATA-2
22							22	DV CLK 0	P028-12				-DV_CLKO	22	DV DATA OUT -2	P028-10				-DVDA-2
23	BYP 9	P004-23A	P006-23A			BYP_9	23	BYP 10	P004-23B	P006-23B			BYP_10	23	BYP 11	P004-23C	P006-23C			BYP_11
24	BYP 6	P004-24A	P006-24A			BYP_6	24	BYP 7	P004-24B	P006-24B			BYP_7	24	BYP 8	P004-24C	P006-24C			BYP_8
25	BYP 3	P004-25A	P006-25A			BYP_3	25	BYP 4	P004-25B	P006-25B			BYP_4	25	BYP 5	P004-25C	P006-25C			BYP_5
26	BYP 0	P004-26A	P006-26A			BYP_0	26	BYP 1	P004-26B	P006-26B			BYP_1	26	BYP 2	P004-26C	P006-26C			BYP_2
27	GND (D)					GND	27	GND (D)					GND	27	GND (D)					GND
28	+5V (D)					+5V(D4)	28	+5V (D)					+5V (D4)	28	+5V (D)					+5V (D4)
29	+5V (D)					+5V(D4)	29	+5V (D)					+5V (D4)	29	+5V (D)					+5V (D4)
30	-5V (D)					-5V(D)	30	-5V (D)					-5V (D)	30	-5V (D)					-5V (D)
31	GND (D)					GND	31	GND (D)					GND	31	GND (D)					GND
32	GND (D)					GND	32	GND (D)					GND	32	GND (D)					GND

L MOTHER (P019, P024) SCHEMATIC DIAGRAM (5/7)

P024
HIROSE PCN13-96S-2.54DSA

L

FROM / TO					A		B	FROM / TO				
GND					GND (D)	1	GND (D)					GND
TEST_EE2			P018-13	P005-17A	TEST EE2	2	BLK SYNC					BLK_SYNC
ENV_DET1				P005-23A	ENV-DET CH1	3	PB H SW	P005-13C				PB_H_SW
ENV_DET0				P005-22A	ENV-DET CH0	4	PB TP FRAME	P005-12C				PBTP_FRM
SEG-VAG				P005-10A	SEGM VAGUE	5	FV/8	P007-15C				FV/8
PB-FN0				P005-10B	PB - FN0	6	FV/4	P007-15B				FV/4
SEG-1				P005-9B	SEG - 1	7	FV/2	P007-15A	P004-19B			FV/2
SEG-0				P005-9A	SEGU - 0	8	90/100HZ	P007-16A				90/100HZ
AV_RESET	P001-30B	P003-30B	P005-30B	P007-30B	AV RESET	9	AU DATA IN 7	P003-17C	P006-13B			AUDAIN7
AV_BUSY				P007-31A	AV BUSY	10	AU DATA IN 6	P003-17B	P006-13A			AUDAIN6
AV_WR	P001-30C	P003-30C	P005-30C	P007-30C	AV WR	11	AU DATA IN 5	P003-17A	P006-12C			AUDAIN5
AV_RD	P001-29A	P003-29A	P005-29A	P007-29A	AV RD	12	AU DATA IN 4	P003-18C	P006-12B			AUDAIN4
AVSYSINT				P007-30A	AV SYS INT	13	AU DATA IN 3	P003-18B	P006-12A			AUDAIN3
AVAB_15	P001-24C	P003-24C	P005-24C	P007-24C	AV AB 15	14	AU DATA IN 2	P003-18A	P006-11C			AUDAIN2
AVAB_14	P001-24B	P003-24B	P005-24B	P007-24B	AV AB 14	15	AU DATA IN 1	P003-19C	P006-11B			AUDAIN1
AVAB_13	P001-24A	P003-24A	P005-24A	P007-24A	AV AB 13	16	AU DATA IN 0	P003-19B	P006-11A			AUDAIN0
AVAB_12	P001-25C	P003-25C	P005-25C	P007-25C	AV AB 12	17	FILD	P005-8A				FILD
AVAB_11	P001-25B	P003-25B	P005-25B	P007-25B	AV AB 11	18	PB5F	P005-7C	P003-7C			PB_5F
AVAB_10	P001-25A	P003-25A	P005-25A	P007-25A	AV AB 10	19	VALIDF	P005-7A				VALID_F
AVAB_9	P001-26C	P003-26C	P005-26C	P007-26C	AV AB 9	20	MUTE 34	P005-8C				MUTE_34
AVAB_8	P001-26B	P003-26B	P005-26B	P007-26B	AV AB 8	21	MUTE 12	P005-8B				MUTE_12
AV_ALE	P001-29B	P003-29B	P005-29B	P007-29B	AV ALE	22	ST FLG	P006-16B				ST_FLG
AVAD_7	P001-26A	P003-26A	P005-26A	P007-26A	AV AD 7	23	STD	P006-16A				ST_0
AVAD_6	P001-27C	P003-27C	P005-27C	P007-27C	AV AD 6	24	PBD 34	P006-15B				PBD_34
AVAD_5	P001-27B	P003-27B	P005-27B	P007-27B	AV AD 5	25	PBD 12	P006-15A				PBD_12
AVAD_4	P001-27A	P003-27A	P005-27A	P007-27A	AV AD 4	26	DSD L	P002-3B				DSD_L
AVAD_3	P001-28C	P003-28C	P005-28C	P007-28C	AV AD 3	27	DSD 3	P002-2C				DSD_3
AVAD_2	P001-28B	P003-28B	P005-28B	P007-28B	AV AD 2	28	DSD 1	P002-2A				DSD_1
AVAD_1	P001-28A	P003-28A	P005-28A	P007-28A	AV AD 1	29	ASD 3	P002-4C				ASD_3
AVAD_0	P001-29C	P003-29C	P005-29C	P007-29C	AV AD 0	30	ASD 1	P002-4A				ASD_1

P019
HIROSE PCN13-96S-2.54DSA

L

FROM / TO					A		B	FROM / TO				
					GND (D)	1	GND (D)					GND
						2						
						3	AV DATA IN 7	P004-11C				-AVDAIN7
						4	AV DATA IN 7	P004-10C				AVDAIN7
						5	AV DATA IN 6	P004-11B				-AVDAIN6
VCPRESET				P007-31B	VCP RESET	6	AV DATA IN 6	P004-10B				AVDAIN6
REC_VS				P004-7B	REC V SYNC	7	AV DATA IN 5	P004-11A				-AVDAIN5
R_COM_SY				P004-6B	REC COMP SYNC	8	AV DATA IN 5	P004-10A				AVDAIN5
VITCGATE				P004-7C	VITC GATE	9	AV DATA IN 4	P004-13C				-AVDAIN4
REC_VITC				P004-6C	REC VITC	10	AV DATA IN 4	P004-12C				AVDAIN4
REC_CF				P004-8C	REC CF	11	AV DATA IN 3	P004-13B				-AVDAIN3
CHAR_GA				P002-20C	CHAR GATE	12	AV DATA IN 3	P004-12B				AVDAIN3
CHAR_SIG				P002-20B	CHAR SIG	13	AV DATA IN 2	P004-13A				-AVDAIN2
REC_H_SW				P004-8B	REC H SW	14	AV DATA IN 2	P004-12A				AVDAIN2
V_SYNC				P007-18C	PB V SYNC	15	AV DATA IN 1	P004-15C				-AVDAIN1
COMP_SY				P007-19A	PB COMP SYNC	16	AV DATA IN 1	P004-14C				AVDAIN1
PB_VITC				P007-19B	PB VITC	17	AV DATA IN 0	P004-15B				-AVDAIN0
SPI_VD				P007-18B	SPI VD	18	AV DATA IN 0	P004-14B				AVDAIN0
SPI_HD				P007-18A	SPI HD	19	AV CLK I	P004-15A				-AV_CLKI
CAP_FG1				P007-16B	CAP FG1	20	AV CLK I	P004-14A				AV_CLKI
CAP_DIR				P007-16C	CAP DIR	21	AV HD	P004-19A				-AV_HO
FSA				P003-13B	FSA	22	AV HD	P004-18A				AV_HO
FSD				P003-23A	FSD	23	AV CF	P004-17C				AV_CF
ST3				P003-31C	ST3	24	AV FRM	P004-17B				AV_FRM
ST2				P003-31B	ST2	25	AV LALT	P004-16C				AV_LALT
ST1				P003-31A	ST1	26	AV SC	P004-17A				-AV_SC
ST0				P003-30A	ST0	27	AV SC	P004-16A				AV_SC
WCK			P001-23C	P003-21C	WCK	28	AV CS	P004-9A				-AV_CS
+BCK			P001-23B	P003-23B	BCK	29	AV CS	P004-8A				AV_CS
FS128				P003-22C	FS128	30	AV VS	P004-16B				AV_VS
PB_RST			P005-5C	P003-5C	PB RST							

L MOTHER (P009, P010, P012, I

P009

1	GND (A)		
2	+12V (A)		
3	-12V (A)		
4	GND (A)		
5	+8V (un)		
6	-8V (un)		
7	+15V (un)		
8	-15V (un)		

P010

1	CH1 LINE OUT	P001-15A	
2	CH1 LINE OUT GND	P001-16A	
3	CH2 LINE OUT	P001-15B	
4	CH2 LINE OUT GND	P001-16B	
5	CH3 LINE OUT	P001-15C	
6	CH3 LINE OUT GND	P001-16C	
7	CH4 LINE OUT	P001-17A	
8	CH4 LINE OUT GND	P001-18A	
9	MONI L OUT	P001-17B	
10	MONI L OUT GND	P001-18B	
11	MONI R OUT	P001-17C	
12	MONI R OUT GND	P001-18C	

P012

1	REC INPUT VIDEO	P002-15A	
2	REC INPUT VIDEO GND	P002-17A	
3	RF WFM	P002-16B	
4	RF WFM GND	P002-17B	
5	WF CTL	P002-16C	
6	WF CTL GND	P002-17C	
7	4fsc CLK	P004-6A	
8	4fsc CLK GND	P004-7A	

009, P010, P012, P014, P015, P017, P018, P021, P022) SCHEMATIC DIAGRAM (6/7)

09	FROM / TO				
A)					GND
A)					+12V (A)
A)					-12V (A)
A)					GND
n)					+8V (UN)
n)					-8V (UN)
n)					+15V (UN)
n)					-15V (UN)

10	FROM / TO				
NE JT	P001-15A				CH1_OUT
NE OUT GND	P001-16A				CH1OUT_G
NE OUT	P001-15B				CH2_OUT
NE JT GND	P001-16B				CH2OUT_G
NE JT	P001-15C				CH3_OUT
NE JUT GND	P001-16C				CH3OUT_G
NE OUT	P001-17A				CH4_OUT
NE OUT GND	P001-18A				CH4OUT_G
D	P001-17B				MONI_L_O
D GND	P001-18B				MONI_L_G
OU	P001-17C				MONI_R_O
OUT GND	P001-18C				MONI_R_G

P012	FROM / TO				
PU VIDEO	P002-16A				REC_INPU
PU VIDEO GND	P002-17A				REC_V_G
	P002-16B				RF_WFM
GND	P002-17B				RF_WFM_G
	P002-16C				WF_CTL
D	P002-17C				WF_CTL_G
LK	P004-6A				4FSC
LK GND	P004-7A				4FSC_G

P014		FROM / TO				
1	VIDEO 1 OUT	P002-18A				VIDE01_O
2	VIDEO 1 OUT GND	P002-19A				VIDE01_G
3	VIDEO 2 OUT	P002-18B				VIDE02_O
4	VIDEO 2 OUT GND	P002-19B				VIDE02_G
5	VIDEO 3 OUT	P002-18C				VIDE03_O
6	VIDEO 3 OUT GND	P002-19C				VIDE03_G
7	WFM OUT	P002-20A				WFM_OUT
8	WFM OUT GND	P002-21A				WFM_GND

P015		FROM / TO				
1	CH1 LINE IN H	P001-10C				CH1_IN_H
2	CH1 LINE IN C	P001-10B				CH1_IN_C
3	CH1 LINE IN GND	P001-10A				CH1_IN_G
4	CH2 LINE IN H	P001-11C				CH2_IN_H
5	CH2 LINE IN C	P001-11B				CH2_IN_C
6	CH2 LINE IN GND	P001-11A				CH2_IN_G
7	CH3 LINE IN H	P001-12C				CH3_IN_H
8	CH3 LINE IN C	P001-12B				CH3_IN_C
9	CH3 LINE IN GND	P001-12A				CH3_IN_G
10	CH4 LINE IN H	P001-13C				CH4_IN_H
11	CH4 LINE IN C	P001-13B				CH4_IN_C
12	CH4 LINE IN GND	P001-13A				CH4_IN_G

P017		FROM / TO				
1	DV DATA IN 7	P004-2C				DVDAIN7
2	DV DATA IN 6	P004-2B				DVDAIN6
3	DV DATA IN 5	P004-2A				DVDAIN5
4	DV DATA IN 4	P004-3C				DVDAIN4
5	DV DATA IN 3	P004-3B				DVDAIN3
6	DV DATA IN 2	P004-3A				DVDAIN2
7	DV DATA IN 1	P004-4C				DVDAIN1
8	DV DATA IN 0	P004-4B				DVDAIN0
9	DV DATA IN -1	P004-4A				DVDAIN-1
10						
11	DV CLK I	P004-5A				DV_CLKI
12	DV CLK I	P004-5B				-DV_CLKI
13	+5V (D)					+5V(D1)
14	GND (D)					GND
15	-5V (D)					-5V(D)

P018		FROM / TO				
1	CH0 REC	P004-18C				CH0_REC
2	CH1 REC	P004-19C				CH1_REC
3	CH0 REC D	P004-20A				CHOREC_D
4	CH0 REC D	P004-21A				-CH0_R_D
5	CH0 REC D GND	P004-22A				CH0_RECG
6	CH1 REC D	P004-20B				CH1_RECD
7	CH1 REC D	P004-21B				-CH1_R_D
8	CH1 REC GND	P004-22B				CH1_RECG
9	REC CLK	P004-20C				REC_CLK
10	REC CLK	P004-21C				-REC_CLK
11	REC CLK GND	P004-22C				REC_CLKG
12	FRY ERASE	P004-18B				FRYERASE
13	TEST EE2	P005-17A	P024-2A			TEST_EE2

P021		FROM / TO				
1	PB DATA CH0	P005-18A				+P_DATA0
2	PB DATA CH0	P005-18B				-P_DATA0
3	PB DATA CH0 GND	P005-18C				P_DATA0G
4	PB CLOCK CH0	P005-19A				+P_CLOK0
5	PB CLOCK CH0	P005-19B				-P_CLOK0
6	PB CLOCK CH0 GND	P005-19C				P_CLOK0G
7	PB DATA CH1	P005-20A				+P_DATA1
8	PB DATA CH1	P005-20B				-P_DATA1
9	PB DATA CH1 GND	P005-20C				P_DATA1G
10	PB CLOCK CH1	P005-21A				+P_CLOK1
11	PB CLOCK CH1	P005-21B				-P_CLOK1
12	PB CLOCK CH1 GND	P005-21C				P_CLOK1G

P022		FROM / TO				
1	SYNC + CH0	P005-11A				SYNC+0
2	SYNC - CH0	P005-12A				SYNC-0
3	GND					GND
4	SYNC + CH1	P005-11B				SYNC+1
5	SYNC - CH1	P005-12B				SYNC-1
6	GND					GND

2 3 4 5 6 7

L MOTHER (P026, P027, P028, P029, P032, P034, P035, P036) SCHEMATIC DIAGRAM (7/7)

P026		FROM / TO				
1	SYNC OUT	P007-9C				CMPSY
2	GND (A)	P007-10C				GND_A
3	SC_OUT	NC				SC_OUT
4	GND (A)	NC				GND

P027		FROM/TO				
1	DV DATA OUT 7	P008-15C				DVDATA7
2	DV DATA OUT $\overline{7}$	P008-16C				-DVDATA7
3	DV DATA OUT 6	P008-15B				DVDATA6
4	DV DATA OUT $\overline{6}$	P008-16B				-DVDATA6
5	DV DATA OUT 5	P008-15A				DVDATA5
6	DV DATA OUT $\overline{5}$	P008-16A				-DVDATA5
7	DV DATA OUT 4	P008-17C				DVDATA4
8	DV DATA OUT $\overline{4}$	P008-18C				-DVDATA4
9	DV DATA OUT 3	P008-17B				DVDATA3
10	DV DATA OUT $\overline{3}$	P008-18B				-DVDATA3

P028		FROM / TO				
1	DV DATA OUT 2	P008-17A				DVDATA2
2	DV DATA OUT $\overline{2}$	P008-18A				-DVDATA2
3	DV DATA OUT 1	P008-19C				DVDATA1
4	DV DATA OUT $\overline{1}$	P008-20C				-DVDATA1
5	DV DATA OUT 0	P008-19B				DVDATA0
6	DV DATA OUT $\overline{0}$	P008-20B				-DVDATA0
7	DV DATA OUT -1	P008-19A				DVDATA-1
8	DV DATA OUT $\overline{-1}$	P008-20A				-DVDA-1
9	DV DATA OUT -2	P008-21C				DVDATA-2
10	DV DATA OUT $\overline{-2}$	P008-22C				-DVDA-2
11	DV CLK 0	P008-21B				DV_CLK0
12	$\overline{\text{DV CLK 0}}$	P008-22B				-DV_CLK0

P029		FROM / TO				
1	REF VIDEO IN	P007-20A				REF_V_IN
2	REF VIDEO IN GND	P007-21A				REF_V_G
3	BLACK BURST	P007-22A				BLA_BUR
4	BLACK BURST GND	P007-23A				BLA_GND
5	EXT CF IN	P007-20B	P004-9C			EXT_CF
6	EXT CF IN GND	P007-21B				EXT_CF_G
7	CF PULSE	P007-22B				CF_PULSE
8	CF PULSE GND	P007-23B				CF_P_GND

P032		FROM / TO				
1	DIF CK	P003-5A				DIFCK
2	$\overline{\text{DIF CK}}$	P003-6A				-DIFCK
3	DIF CK GND					GND
4	DB CK	P003-20B				DBCK
5	$\overline{\text{DB CK}}$	P003-20C				-DBCK
6	DB CK GND					GND

P034		FROM/TO				
1	-5V (D)					-5V (D)
2	GND (D)					GND
3	+5V (D)					+5V (D1)
4	+5V (D)					+5V (D2)
5	+5V (D)					+5V (D3)
6	+5V (D)					+5V (D4)
7	GND (D)					GND
8	GND (D)					GND
9	GND (D)					GND
10	GND (D)					GND

P035		FROM / TO				
1	-5V (D)					-5V (D)
2	+5V (D)					+5V (D1)
3	GND (D)					GND

P036		FROM / TO				
1	TXD	P007-20C				+TXD
2	$\overline{\text{TXD}}$	P007-21C				-TXD
3	RXD	P007-22C				+RXD
4	$\overline{\text{RXD}}$	P007-23C				-RXD
5	GND (D)					GND

D C B A

1 2 3 4 5 6 7

S MOTHER (P201, P202) SCHEMATIC DIAGRAM (1/14) FOR S1

DIFCK
-DIFCK
GND
DBCK
-DBCK
GND

-5V (D)
GND
+5V (D1)
+5V (D2)
+5V (D3)
+5V (D4)
GND
GND
GND
GND
GND

-5V (D)
+5V (D1)
GND

+TXD
-TXD
+RXD
-RXD
GND

P201
HIROSE PCN13-96S-2.54DSA
S 1

	A	FROM / TO						B	FROM / TO						C	FROM / TO				
1	GND (D)					GND	1	GND (D)					GND	1	GND (D)					GND
2							2							2						
3							3							3						
4	AT CH0 A GND	P221-3	P201-6C	P203-8A	P203-10C	GND	4	GND					GND	4	AT GND					GND
5	AT CH0 A	P221-1	P203-9A			+AT/CF_A	5	GND					GND	5	AT/CNF CH0 A	P221-2			P203-9C	-AT/CF_A
6	AT CH0 B GND	P221-6	P201-8C	P203-10A	P203-12C	GND	6	GND					GND	6	AT/CNF CH0 A GND	P221-3	P201-4A	P203-8A	P203-10C	GND
7	AT CH0 B	P221-4	P203-11A			+AT/CF_B	7	GND					GND	7	AT/CNF CH0 B	P221-5			P203-11C	-AT/CF_B
8	AT GND					GND	8	GND					GND	8	AT/CNF CH0 B GND	P221-6	P201-6A	P203-10A	P203-12C	GND
9							9	GND					GND	9						
10							10	GND					GND	10						
11							11	GND					GND	11						
12	REC GND					GND	12	GND					GND	12	REC DATA CH0 GND	P201-14A	P502'-3			GND
13	REC DATA CH0	P502'-1				+REC_DA0	13	GND					GND	13	REC DATA CH0	P502'-2				-REC_DA0
14	REC DATA CH0 GND	P502'-3	P201-12C			GND	14	GND					GND	14	REC DATA CH1 GND	P201-16A	P502'-6			GND
15	REC DATA CH1	P502'-4				+REC_DA1	15	GND					GND	15	REC DATA CH1	P502'-5				-REC_DA1
16	REC DATA CH1 GND	P502'-6	P201-14C			GND	16	GND					GND	16	REC CLK GND	P201-18A	P502'-9			GND
17	REC CLK	P502'-7				+REC_CLK	17	GND					GND	17	REC CLK	P502'-8				-REC_CLK
18	REC CLK GND	P502'-9	P201-16C			GND	18	GND					GND	18	GND					GND
19	CH1 REC	P503'-3				CH1_REC	19							19	CH0 REC	P503'-1				CH0_REC
20	TEST EE2	P502'-11	P203-20A	P245-2B		TEST_EE2	20							20	FRY ERASE	P502'-10				FRYERASE
21							21	H SW CH1	P203-22B	P224-4			H_SW1	21						
22							22	H SW CH0	P203-23B	P219-4			H_SW0	22						
23							23	SER H SW	P256-1	P210-18A	P214-19A		SER_H_SW	23						
24	REC ENV CH0	P235-1	P210-19B	P208-18C		REC_E_0	24	SER H SW GND	P256-2	P210-18B			SERHSW_G	24	REC ENV CH1	P235-3	P210-22A	P208-20C		REC_E_1
25	REC ENV CH0 GND	P235-2	P210-19C	P208-19C		REC_E_0G	25							25	REC ENV CH1 GND	P235-4	P210-23A	P208-21C		REC_E_1G
26							26							26						
27							27							27						
28	-5V (D)					-5V (D)	28	-5V (D)					-5V (D)	28	-5V (D)					-5V (D)
29	+5V (D)					+5V (D)	29	+5V (D)					+5V (D)	29	+5V (D)					+5V (D)
30	+5V (D)					+5V (D)	30	+5V (D)					+5V (D)	30	+5V (D)					+5V (D)
31	GND (D)					GND	31	GND (D)					GND	31	GND (D)					GND
32	GND (D)					GND	32	GND (D)					GND	32	GND (D)					GND

P202
HIROSE PCN13-96S-2.54DSA
S 1

	A	FROM / TO						B	FROM / TO						C	FROM / TO				
1	RF WFM GND	P204-1A	P249-4	P204-1B	P202-1B	RF_WFM_G	1	RF WFM GND	P204-1A	P249-4	P202-1A	P204-1B	RF_WFM_G	1	RF WFM	P204-1C	P249-3			RF_WFM
2	ENV CH0	P208-2A	P204-3A			ENV_CH0	2							2	ENV CH0 GND	P208-3A	P204-3A			ENV_CH0G
3							3							3						
4	E-E CH0 GND	P219-3	P202-6C	P204-6A	P204-8C	GND	4							4	E-E GND					GND
5	E-E CH0	P219-1	P204-7A			+EE_CH0	5							5	E-E CH0	P219-2	P204-7C			-EE_CH0
6	E-E CH1 GND	P204-4A	P204-6C	P224-3	P202-8C	GND	6							6	E-E CH0 GND	P219-3	P202-4A	P204-6A	P204-8C	GND
7	E-E CH1	P204-5A	P224-1			+EE_CH1	7							7	E-E CH1	P204-5C	P224-2			-EE_CH1
8	E-E GND					GND	8							8	E-E CH1 GND	P204-6C	P202-6A	P204-4A	P224-3	GND
9							9	GND					GND	9						
10							10	GND					GND	10						
11							11	GND					GND	11						
12							12	GND					GND	12						
13							13	GND					GND	13						
14	ENV DET CH0	P245-4B	P204-9A			ENV_DET0	14	GND					GND	14						
15	PB DATA CH0 GND	P220-3	P202-17C	P204-11C	P204-10A	GND	15	GND					GND	15	PB GND					GND
16	PB DATA CH0	P220-1	P204-11A			+PBDA_0	16	GND					GND	16	PB DATA CH0	P220-2	P204-10C			-PBDA_0
17	PB CLOCK CH0 GND	P220-6	P202-19C	P204-13C	P204-12A	GND	17	GND					GND	17	PB DATA CH0 GND	P220-3	P202-15A	P204-11C	P204-10A	GND
18	PB CLOCK CH0	P220-4	P204-13A			+PB_CLC0	18	GND					GND	18	PB CLOCK CH0	P220-5	P204-12C			-PB_CLC0
19	PB GND					GND	19	GND	P204-19B				GND	19	PB CLOCK CH0 GND	P220-6	P202-17A	P204-13C	P204-12A	GND
20	HT SPEED GND	P210-19A	P204-20A			HT_SPE_G	20	GND					GND	20	HT SPEED	P210-18C	P204-20C			HT_SPEED
21	PB MODE	P214-21A	P204-21A			PB_MODE	21	REC CURR CH1	P240-2	P214-23A			R_C_C_1	21	RF WFM SELECT 0	P214-20C	P204-21C			RF_WFM_0
22	REC MODE	P256-4	P214-20A			REC_MODE	22	REC CURR CH0	P240-1	P214-22A			R_C_C_0	22	RF WFM SELECT 1	P214-21C	P204-22C			RF_WFM_1
23	EQ GAIN CH0	P214-22B				EQ_GAIN0	23							23	EQ FREQ CH0	P214-22C	P204-24C			EQ_FREQ0
24	TEST MODE	P256-3	P214-21B			TESTMODE	24							24						
25	-5V (A)					-5V (A)	25	-5V (A)					-5V (A)	25	-5V (A)					-5V (A)
26	+5V (A)					+5V (A)	26	+5V (A)					+5V (A)	26	+5V (A)					+5V (A)
27	-12V (A)					-12V (A)	27	-12V (A)					-12V (A)	27	-12V (A)					-12V (A)
28	+12V (A)					+12V (A)	28	+12V (A)					+12V (A)	28	+12V (A)					+12V (A)
29	+15V (un)					+15V (UN)	29	+15V (un)					+15V (UN)	29	+15V (un)					+15V (UN)
30	+8V (un)					+8V (UN)	30	+8V (un)					+8V (UN)	30	+8V (un)					+8V (UN)
31	GND (A)					GND	31	GND (A)					GND	31	GND (A)					GND
32	GND (A)					GND	32	GND (A)					GND	32	GND (A)					GND

S MOTHER (P203, P204) SCHEMATIC DIAGRAM (2/14) FOR S2

P203
HIROSE PCN13-96S-2.54DSA

S 2

	A	FROM / TO					B	FROM / TO					C	FROM / TO				
1	GND (D)					GND	GND (D)					GND	GND (D)					GND
2																		
3																		
4	AT CH1 A GND	P221-9	P203-6C			GND	GND					GND	AT GND					GND
5	AT CH1 A	P221-7				*A/C_1A	GND					GND	AT CH1 A	P221-8				-A/C_1A
6	AT CH1 B GND	P221-12	P203-8C			GND	GND					GND	AT CH1 A GND	P221-9	P203-4A			GND
7	AT CH1 B	P221-10				*A/C_1B	GND					GND	AT CH1 B	P221-11				-A/C_1B
8	AT CH0 A GND	P201-4A	P221-3	P201-6C	P203-10C	GND	GND					GND	AT CH1 B GND	P221-12	P203-6A			GND
9	AT CH0 A	P201-5A	P221-1			*AT/CF_A	GND					GND	AT CH0 A	P201-5C	P221-2			-AT/CF_A
10	AT CH0 B GND	P201-6A	P221-6	P201-8C	P203-12C	GND	GND					GND	AT CH0 A GND	P201-6C	P221-3	P203-8A	P201-4A	GND
11	AT CH0 B	P201-7A	P221-4			*AT/CF_B	GND					GND	AT CH0 B	P201-7C	P221-5			-AT/CF_B
12	AT GND					GND	GND					GND	AT CH0 B GND	P201-8C	P221-6	P203-10A	P201-6A	GND
13							GND					GND						
14							GND					GND						
15							GND					GND						
16							GND					GND						
17							GND					GND						
18							GND					GND						
19																		
20	TEST EE2	P201-20A	P245-2B	P502-11		TEST_EE2												
21																		
22							H SW CH1	P201-21B	P224-4			H_SW1						
23							H SW CH0	P201-22B	P219-4			H_SW0						
24																		
25																		
26																		
27																		
28	-5V (D)					-5V (D)	-5V (D)					-5V (D)	-5V (D)					-5V (D)
29	+5V (D)					+5V (D)	+5V (D)					+5V (D)	+5V (D)					+5V (D)
30	+5V (D)					+5V (D)	+5V (D)					+5V (D)	+5V (D)					+5V (D)
31	GND (D)					GND	GND (D)					GND	GND (D)					GND
32	GND (D)					GND	GND (D)					GND	GND (D)					GND

P204
HIROSE PCN13-96S-2.54DSA

S 2

	A	FROM / TO					B	FROM / TO					C	FROM / TO				
1	RF WFM GND	P202-1A	P249-4	P201-1B	P204-1B	RF_WFM_G	RF WFM GND	P202-1B	P249-4	P202-1A	P204-1A	RF_WFM_G	RF WFM	P202-1C	P249-3			RF_WFM
2	ENV CH1	P208-4A				ENV_CH1							ENV CH1 GND	P208-5A				ENV_CH1G
3	ENV CH0	P208-2A	P202-2A			ENV_CH0							ENV CH0 GND	P202-2C	P208-3A			ENV_CH0G
4	E-E CH1 GND	P224-3	P204-6C	P202-6A	P202-8C	GND							E-E GND					GND
5	E-E CH1	P224-1	P202-7A			*EE_CH1							E-E CH1	P224-2	P202-7C			-EE_CH1
6	E-E CH0 GND	P202-4A	P202-6C	P204-8C	P219-3	GND							E-E CH1 GND	P224-3	P204-4A	P202-8C	P202-6A	GND
7	E-E CH0	P202-5A	P219-1			*EE_CH0							E-E CH0	P202-5C	P219-2			-EE_CH0
8	E-E GND					GND							E-E CH0 GND	P202-6C	P219-3	P202-4A	P204-6A	GND
9	ENV DET CH0	P202-14A	P245-4B			ENV_DET0	GND					GND	PB GND					GND
10	PB DATA CH0 GND	P202-15A	P220-3	P202-17C	P204-11C	GND	GND					GND	PB DATA CH0	P202-16C	P220-2			-PBDA_0
11	PB DATA CH0	P202-16A	P220-1			*PBDA_0	GND					GND	PB DATA CH0 GND	P202-17C	P220-3	P202-15A	P204-10A	GND
12	PS CLOCK CH0 GND	P202-17A	P220-6	P202-19C	P204-13C	GND	GND					GND	PB CLOCK CH0	P202-18C	P220-5			-PB_CLC0
13	PS CLOCK CH0	P202-18A	P220-4			*PB_CLC0	GND					GND	PB CLOCK CH0 GND	P202-19C	P220-6	P202-17A	P204-12A	GND
14	ENV DET CH1	P245-3B				ENV_DET1	GND					GND						
15	PB DATA CH1 GND	P220-9	P204-17C			GND	GND					GND						
16	PB DATA CH1	P220-7				*PBDA_1	GND					GND	PB DATA CH1	P220-8				-PBDA_1
17	PB CLOCK CH1 GND	P220-12	P204-19C			GND	GND					GND	PB DATA CH1 GND	P204-15A	P220-9			GND
18	PB CLOCK CH1	P220-10				*PB_CLK1	GND					GND	PB CLOCK CH1	P220-11				-PB_CLK1
19	PB GND					GND	GND					GND	PB CLOCK CH1 GND	P204-17A	P220-12			GND
20	HT SPEED GND	P202-20A	P210-19A			HT_SPE_G							HT SPEED	P202-20C	P210-18C			HT_SPEED
21	PB MODE	P214-21A	P202-21A			PB_MODE							RF WFM SERECT 0	P214-20C	P202-21C			RF_WFM_0
22													RF WFM SERECT 1	P214-21C	P202-22C			RF_WFM_1
23	EQ GAIN CH1	P214-23B				EQ_GAIN1							EQ FREQ CH1	P214-23C				EQ_FREQ1
24	EQ GAIN CH0	P202-23A	P214-22B			EQ_GAIN0							EQ FREQ CH0	P202-23C	P214-22C			EQ_FREQ0
25	-5V (A)					-5V (A)	-5V (A)					-5V (A)	-5V (A)					-5V (A)
26	+5V (A)					+5V (A)	+5V (A)					+5V (A)	+5V (A)					+5V (A)
27	-12V (A)					-12V (A)	-12V (A)					-12V (A)	-12V (A)					-12V (A)
28	+12V (A)					*12V (A)	+12V (A)					+12V (A)	+12V (A)					+12V (A)
29	+15V (un)					*15V (UN)	+15V (un)					+15V (UN)	+15V (un)					+15V (UN)
30	+8V (un)					+8V (UN)	+8V (un)					+8V (UN)	+8V (un)					+8V (UN)
31	GND (A)					GND	GND (A)					GND	GND (A)					GND
32	GND (A)					GND	GND (A)					GND	GND (A)					GND

S MOTHER (P205, P206) SCHEMATIC DIAGRAM (3/14) FOR S3

P205
HIROSE PCN13-96S-2.54DSA
S 3

	A	FROM / TO						B	FROM / TO						C	FROM / TO					
1	GND (D)					GND	1	GND (D)					GND	1	GND (D)						GND
2							2							2							
3	GND (A)					GND	3	GND (A)					GND	3	GND (A)						GND
4	TC R/P HEAD GND	P228-3				TC_HEADG	4	TC R/P HEAD C	P228-2				TC_HEADC	4	TC R/P HEAD H	P228-1					TC_HEADH
5	GND (A)					GND	5	GND (A)					GND	5	GND (A)						GND
6	GND (A)					GND	6	GND (A)					GND	6	GND (A)						GND
7							7							7							
8							8							8							
9							9							9	SYS RESET	P211-9C	P213-9C	P233-10A	P241-12B	P260-9	SYS_RST
10							10							10							
11							11							11							
12							12							12							
13							13							13							
14							14							14							
15							15							15							
16							16							16							
17							17							17							
18							18							18							
19	REC LTC	P211-26A				REC_LTC	19	PB LTC	P211-26B				PB_LTC	19							
20							20							20							
21	FULL ERASE	P211-21A				FULL_ERA	21	OSC ON	P211-21B				OSC_ON	21	ERASE CHECK	P211-21C					ERA_CHEK
22	CUE ERASE	P211-22A				CUE_ERA	22	TC ERASE	P211-22B				TC_ERASE	22	CTL ERASE	P211-22C					CTL_ERA
23	CUE REC	P211-23A				CUE_REC	23	TC REC	P211-23B				TC_REC	23	CUE EE	P211-23C					CUE_EE
24	MUTE	P211-24A				MUTE	24	ATT 1	P211-24B				ATT1	24	ATT 2	P211-24C					ATT2
25	CUE REC VR	P211-25A				CUE_R_VR	25	CUE PB VR	P211-25B				CUE_P_VR	25	CUE MIX	P211-25C					CUE_MIX
26	SIG MUTE	P230-3	P230-6			SIG_MUTE	26							26							
27	+24V (un)					+24V (UN)	27	+24V (un)					+24V (UN)	27	+24V (un)						+24V (UN)
28	-5V (D)					-5V (D)	28	-5V (D)					-5V (D)	28	-5V (D)						-5V (D)
29	+5V (D)					+5V (D)	29	+5V (D)					+5V (D)	29	+5V (D)						+5V (D)
30	+5V (D)					+5V (D)	30	+5V (D)					+5V (D)	30	+5V (D)						+5V (D)
31	GND (D)					GND	31	GND (D)					GND	31	GND (D)						GND
32	GND (D)					GND	32	GND (D)					GND	32	GND (D)						GND

P206
HIROSE PCN13-96S-2.54DSA
S 3

	A	FROM / TO						B	FROM / TO						C	FROM / TO					
1							1							1							
2							2							2							
3							3							3							
4							4							4							
5							5							5							
6	GND (A)					GND	6	GND (A)					GND	6	GND (A)						GND
7	GND (A)					GND	7	CUE METER GND	P216-11B				CUE_M_G	7	CUE METER	P216-11C					CUEMETER
8	GND (A)					GND	8	GND (A)					GND	8	GND (A)						GND
9	GND (A)					GND	9	GND (A)					GND	9	GND (A)						GND
10	GND (A)					GND	10	CUE GND	P230-2	P230-5			CUE_GND	10	CUE SIG	P230-1	P230-4				CUE_SIG
11	GND (A)					GND	11	GND (A)					GND	11	GND (A)						GND
12	GND (A)					GND	12	GND (A)					GND	12	GND (A)						GND
13	CUE LINE SIG GND	P231-3				C_L_S_G	13	CUE LINE SIG C	P231-2				C_L_S_C	13	CUE LINE SIG H	P231-1					C_L_S_H
14	GND (A)					GND	14	GND (A)					GND	14	GND (A)						GND
15	GND (A)					GND	15	GND (A)					GND	15	GND (A)						GND
16	CUE D GND	P216-16A				CUE_D_G	16	CUE D C	P216-16B				CUE_D_C	16	CUE D H	P216-16C					CUE_D_H
17	GND (A)					GND	17	GND (A)					GND	17	GND (A)						GND
18							18							18							
19							19							19							
20							20							20							
21							21							21							
22							22							22							
23							23							23							
24							24							24							
25	-5V (A)					-5V (A)	25	-5V (A)					-5V (A)	25	-5V (A)						-5V (A)
26	+5V (A)					+5V (A)	26	+5V (A)					+5V (A)	26	+5V (A)						+5V (A)
27	-12V (A)					-12V (A)	27	-12V (A)					-12V (A)	27	-12V (A)						-12V (A)
28	+12V (A)					+12V (A)	28	+12V (A)					+12V (A)	28	+12V (A)						+12V (A)
29	+15V (un)					+15V (UN)	29	+15V (un)					+15V (UN)	29	+15V (un)						+15V (UN)
30	+8V (un)					+8V (UN)	30	+8V (un)					+8V (UN)	30	+8V (un)						+8V (UN)
31	GND (A)					GND	31	GND (A)					GND	31	GND (A)						GND
32	GND (A)					GND	32	GND (A)					GND	32	GND (A)						GND

S MOTHER (P207, P208) SCHEMATIC DIAGRAM (4/14) FOR S4

P207
HIROSE PCN13-96S-2.54DSA
S 4

	A	FROM / TO					B	FROM / TO					C	FROM / TO				
1	GND (D)					GND	GND (D)					GND	GND (D)					GND
2																		
3																		
4																		
5																		
6																		
7																		
8																		
9	SEG-0	P245-8B				SEG_0	SEG_1	P245-7B				SEG_1	SYNC+CH0	P229-1				SYNC+CH0
10	PB_FN0	P245-6B				PB_FN0	SEG_VAG	P245-5B				SEG_VAG	SYNC-CH0	P229-2				SYNC-CH0
11																		
12													SYNC+CH1	P229-4				SYNC+CH1
13													SYNC-CH1	P229-5				SYNC-CH1
14																		
15							FR_GATE	P209-15B				FR_GATE						
16							FV/2	P209-16B	P245-7A			FV/2						
17																		
18																		
19	STRN_B					STRN_B	STRN_G	P290-2				STRN_G	STRN_A	P290-1				STRN_A
20	PAT_A_G					PAT_A_G	PAT_A	P290-6				PAT_A	HV_MONI	P290-4				HV_MONI
21	PAT_B_G					PAT_B_G	PAT_B	P290-8				PAT_B	HV_ON	P290-5				HV_ON
22																		
23																		
24																		
25																		
26																		
27																		
28	-5V (D)					-5V (D)	-5V (D)					-5V (D)	-5V (D)					-5V (D)
29	+5V (D)					+5V (D)	+5V (D)					+5V (D)	+5V (D)					+5V (D)
30	+5V (D)					+5V (D)	+5V (D)					+5V (D)	+5V (D)					+5V (D)
31	GND (D)					GND	GND (D)					GND	GND (D)					GND
32	GND (D)					GND	GND (D)					GND	GND (D)					GND

P208
HIROSE PCN13-96S-2.54DSA
S 4

	A	FROM / TO					B	FROM / TO					C	FROM / TO				
1																		
2	ENV_CH0	P202-2A	P204-3A			ENV_CH0												
3	ENV_CH0_GND	P202-2C				ENV_CH0G												
4	ENV_CH1	P204-2A				ENV_CH1												
5	ENV_CH1_GND	P204-2C				ENV_CH1G												
6													SER_ADR0	P214-6B	P210-6B			SER_ADR0
7							AC_CTL	P210-5A	P212-5A			AC_CTL	SER_ADR1	P214-7B	P210-7B			SER_ADR1
8													SER_ADR2	P214-8B	P210-8B			SER_ADR2
9																		
10	AT_OT_DT	P210-10A				AT_OT_DT	AT_IN_DT	P210-10B				AT_IN_DT	AT_CLK	P210-10C				AT_CLK
11	ADV_H_SW	P210-11A				ADV_H_SW	REC_H_SW	P210-11B	P251-13B			REC_H_SW	CNF_H_SW	P210-11C				CNF_H_SW
12	ADV_H_SW_GND	P210-12A				GND	REC_H_SW_GND	P210-12B				GND	CNF_H_SW_GND	P210-12C				GND
13	CAP_FB	P210-13A				CAP_FB							CNF_H	P210-13C				CNF_H
14	CAP_FB_G	P210-14A				CAP_FB_G							CAP_FG_1	P210-14C				CAP_FG1
15																		
16	CAP F/R	P210-16A				CAP_F/R							CAP_FG_2	P210-16C				CAP_FG2
17																		
18													REC ENV CH0	P235-1	P201-24A	P210-19B		REC_E_0
19													REC ENV CH0 GND	P235-2	P201-25A	P210-19C		REC_E_0G
20													REC ENV CH1	P235-3	P201-24C	P210-22A		REC_E_1
21													REC ENV CH1 GND	P235-4	P201-25C	P210-23A		REC_E_1G
22													MRST	P213-20A				MRST
23																		
24																		
25	-5V (A)					-5V (A)	-5V (A)					-5V (A)	-5V (A)					-5V (A)
26	+5V (A)					+5V (A)	+5V (A)					+5V (A)	+5V (A)					+5V (A)
27	-12V (A)					-12V (A)	-12V (A)					-12V (A)	-12V (A)					-12V (A)
28	+12V (A)					+12V (A)	+12V (A)					+12V (A)	+12V (A)					+12V (A)
29	+15V (un)					+15V (UN)	+15V (un)					+15V (UN)	+15V (un)					+15V (UN)
30	+8V (un)					+8V (UN)	+8V (un)					+8V (UN)	+8V (un)					+8V (UN)
31	GND (A)					GND	GND (A)					GND	GND (A)					GND
32	GND (A)					GND	GND (A)					GND	GND (A)					GND

S MOTHER (P209, P210) SCHEMATIC DIAGRAM (5/14) FOR S5

P209
HIROSE PCN13-96S-2.54DSA
S 5

	A	FROM / TO						B	FROM / TO						C	FROM / TO					
1	GND (D)						GND	1	GND (D)					GND	1	GND (D)						GND
2	DRUM FG	P236-1					DRUM_FG	2	DRUM FG GND	P236-2				DRUM_FGG	2	DRUM PG +	P236-3					DRUM_PG+
3	DRUM PG-	P236-4					DRUM_PG-	3	V FG +	P236-5				V_FG	3	V FG GND	P236-7					V_FG_G
4	FG 1	P236-6					FG_1	4	FG 2	P236-8				FG_2	4							
5	TFG 1	P236-10					TFG_1	5	T FG 2	P236-11				TFG_2	5	S FG 1	P236-13					SFG_1
6	SFG 2	P236-14					SFG_2	6							6							
7	TEN GND	P232-1					TEN_GND	7	AG (CTL_S)	P237-2				AG (C_S)	7							
8	TEN VCC	P232-2					TEN_VCC	8	S TENTION	P232-4				STENTION	8	PNCH_ON	P213-23A	P233-10B				PINCH_ON
9	CTL HEAD +	P237-1					CTLHEAD+	9	CTL HEAD -	P237-3				CTLHEAD-	9	DRUM BRK L	P233-2B					BRAKE_L
10	DRUM STOP L	P233-2A					STOP_L	10	DRUM ERR	P233-3B				D_ERR	10	DRUM ERR GND	P209-11B	P233-4B				DRVAG
11								11	DRUM REF GND	P233-4B	P209-10C			DRVAG	11	DRUM SW L	P233-3A					D_SW_L
12	CAP EDS	P233-5B					CAP_EDS	12	CAP ERR	P233-5A				CAP_ERR	12	CAP ERR GND	P209-13B	P233-4A				DRVAG
13								13	CAP REF GND	P233-4A	P209-12C			DRVAG	13	CAP ACC	P233-6B					CAP_ACC
14	T R ERR	P233-7B					T_R_ERR	14	S R ERR	P233-7A				S_R_ERR	14	2.5V A	P233-8B					2.5V
15								15	FR_GATE	P207-15B				FR_GATE	15							
16	90/100Hz	P245-8A					90/100HZ	16	FV/2	P245-7A	P207-16B			FV/2	16	FV/4	P245-6A					FV/4
17	FV/8	P245-5A					FV/8	17	PB TP FRAME	P245-4A				P_TP_FRM	17	PB H SW	P245-3A					PB_H_SW
18								18							18							
19	FV VCC	P236-9					FV_VCC	19	FG GND (SFG GND)	P236-15				SFG_GND	19	FG GND (TFG GND)	P236-12					TFG_GND
20								20							20							
21	DRUM_RST	P213-21A					DRUM_RST	21	CAP_RST	P213-21B				CAP_RST	21	REEL_RST	P213-21C					REEL_RST
22								22							22							
23								23							23							
24								24							24							
25								25							25							
26								26							26							
27								27							27							
28	-5V (D)						-5V (D)	28	-5V (D)					-5V (D)	28	-5V (D)						-5V (D)
29	+5V (D)						+5V (D)	29	+5V (D)					+5V (D)	29	+5V (D)						+5V (D)
30	+5V (D)						+5V (D)	30	+5V (D)					+5V (D)	30	+5V (D)						+5V (D)
31	GND (D)						GND	31	GND (D)					GND	31	GND (D)						GND
32	GND (D)						GND	32	GND (D)					GND	32	GND (D)						GND

P210
HIROSE PCN13-96S-2.54DSA
S 5

	A	FROM / TO						B	FROM / TO						C	FROM / TO					
1								1							1							
2								2							2							
3								3							3							
4								4	SYS-FRM	P212-5B				SYS_FRM	4	X3FRM	P212-4C					X3FRM
5	AC-CTL	P212-5A	P208-7B				AC_CTL	5							5	AC-CF	P212-5C					AC_CF
6	S-SER A DATA	P214-6A					SS_A_DA+	6	SER_ADR0	P214-6B	P208-6C			SER_ADR0	6	S-SER SEL 0	P214-6C					SS_SEL_0
7	S-SER B DATA	P214-7A					SS_B_DA+	7	SER_ADR1	P214-7B	P208-7C			SER_ADR1	7	S-SER SEL 1	P214-7C					SS_SEL_1
8	S-SER CLK	P214-8A					SS_CLK	8	SER_ADR2	P214-8B	P208-8C			SER_ADR2	8	CAP DIR	P214-8C	P216-8C	P251-20B			CAP_DIR
9	S-FG	P214-9A					S_FG	9	T-FG	P214-9B				T_FG	9	CAP FG P	P214-9C	P216-9C	P251-19B			CAP_FGP
10	AT_DT_DT	P208-10A					AT_OT_DT	10	AT_IN_DT	P208-10B				AT_IN_DT	10	AT_CLK	P208-10C					AT_CLK
11	ADV_H_SW	P208-11A					ADV_H_SW	11	REC_H_SW	P208-11B	P251-13B			REC_H_SW	11	CNF_H_SW	P208-11C					CNF_H_SW
12	ADV_H_SW_GND	P208-12A					GND	12	REC_H_SW_GND	P208-12B				GND	12	CNF_H_SW_GND	P208-12C					GND
13	CAP_FB	P208-13A					CAP_FB	13							13	CNF_H	P208-13C					CNF_H
14	CAP_FB_G	P208-14A					CAP_FB_G	14	WF CTL	P249-5				WF_CTL	14	CAP_FG1	P208-14C					CAP_FG1
15								15	WF CTL GND	P249-6				WF_CTL_G	15							
16	CAP F/R	P208-16A					CAP_F/R	16							16	CAP_FG2	P208-16C					CAP_FG2
17								17							17							
18	SER H SW	P214-19A	P256-1	P201-23B			SER_H_SW	18	SER_NSW_GND	P256-2	P201-24B			SERHSW_G	18	HT SPEED	P204-20C	P202-20C				HT_SPEED
19	HT SPEED GND	P204-20A	P202-20A				HT_SPE_G	19	REC ENV CH0	P235-1	P201-24A	P208-18C		REC_E_0	19	REC ENV CH0 GND	P235-2	P201-25A	P208-19C			REC_E_0G
20								20							20							
21								21							21							
22	REC ENV CH1	P235-3	P201-24C	P208-20C			REC_E_1	22							22							
23	REC ENV CH1 GND	P235-4	P201-25C	P208-21C			REC_E_1G	23							23							
24								24							24							
25	-5V (A)						-5V (A)	25	-5V (A)					-5V (A)	25	-5V (A)						-5V (A)
26	+5V (A)						+5V (A)	26	+5V (A)					+5V (A)	26	+5V (A)						+5V (A)
27	-12V (A)						-12V (A)	27	-12V (A)					-12V (A)	27	-12V (A)						-12V (A)
28	+12V (A)						+12V (A)	28	+12V (A)					+12V (A)	28	+12V (A)						+12V (A)
29	+15V (un)						+15V (UN)	29	+15V (un)					+15V (UN)	29	+15V (un)						+15V (UN)
30	+8V (un)						+8V (UN)	30	+8V (un)					+8V (UN)	30	+8V (un)						+8V (UN)
31	GND (A)						GND	31	GND (A)					GND	31	GND (A)						GND
32	GND (A)						GND	32	GND (A)					GND	32	GND (A)						GND

S MOTHER (P211, P212) SCHEMATIC DIAGRAM (6/14) FOR S6

S MOT

P211
HIROSE PCN13-96S-2.54DSA

S 6

	A	FROM / TO						B	FROM / TO						C	FROM / TO					
1	GND (D)					GND	1	GND (D)					GND	1	GND (D)						GND
2	AV AD 0	P213-2A	P215-2A	P217-2A	P245-30B	AV_AD_0	2	AV AD 1	P213-2B	P215-2B	P217-2B	P245-29B	AV_AD_1	2	AV AD 2	P213-2C	P215-2C	P217-2C	P245-28B		AV_AD_2
3	AV AD 3	P213-3A	P215-3A	P217-3A	P245-27B	AV_AD_3	3	AV AD 4	P213-3B	P215-3B	P217-3B	P245-26B	AV_AD_4	3	AV AD 5	P213-3C	P215-3C	P217-3C	P245-25B		AV_AD_5
4	AV AD 6	P213-4A	P215-4A	P217-4A	P245-24B	AV_AD_6	4	AV AD 7	P213-4B	P215-4B	P217-4B	P245-23B	AV_AD_7	4	AV ALE	P213-4C	P215-4C	P217-4C	P245-22B		AV_ALE
5	AV AD 8	P213-5A	P215-5A	P217-5A	P245-21B	AV_AB_8	5	AV AB 9	P213-5B	P215-5B	P217-5B	P245-20B	AV_AB_9	5	AV AB 10	P213-5C	P215-5C	P217-5C	P245-19B		AV_AB_10
6	AV AD 11	P213-6A	P215-6A	P217-6A	P245-18B	AV_AB_11	6	AV AB 12	P213-6B	P215-6B	P217-6B	P245-17B	AV_AB_12	6	AV AB 13	P213-6C	P215-6C	P217-6C	P245-16B		AV_AB_13
7	AV AD 14	P213-7A	P215-7A	P217-7A	P245-15B	AV_AB_14	7	AV AB 15	P213-7B	P215-7B	P217-7B	P245-14B	AV_AB_15	7	AV SYS INT	P213-7C	P245-13B				AV_S_INT
8	AV RD	P213-8A	P215-8A	P217-8A	P245-12B	AV_RD	8	AV WR	P213-8B	P215-8B	P217-8B	P245-11B	AV_WR	8	AV BUSY	P213-8C	P245-10B				AV_BUSY
9	SYS DB 0	P213-9A	P261-1	P241-4B		SYS_DB_0	9	SYS AB 0	P213-9B	P260-1	P241-4A		SYS_AB_0	9	SYS RESET	P213-9C	P260-9	P241-12B	P233-10A	P205-9C	SYS_RST
10	SYS DB 1	P213-10A	P261-2	P241-5B		SYS_DB_1	10	SYS AB 1	P213-10B	P260-2	P241-5A		SYS_AB_1	10	SYS IORD	P213-10C	P260-10	P241-12A			SYS_IORD
11	SYS DB 2	P213-11A	P261-3	P241-6B		SYS_DB_2	11	SYS AB 2	P213-11B	P260-3	P241-6A		SYS_AB_2	11	SYS IOWR	P213-11C	P260-11	P241-13A			SYS_IOWR
12	SYS DB 3	P213-12A	P261-4	P241-7B		SYS_DB_3	12	SYS AB 3	P213-12B	P260-4	P241-7A		SYS_AB_3	12	SYS MERD	P213-12C					SYS_MERD
13	SYS DB 4	P213-13A	P261-5	P241-8B		SYS_DB_4	13	SYS AB 4	P213-13B	P260-5	P241-8A		SYS_AB_4	13	SYS MEWR	P213-13C					SYS_MEWR
14	SYS DB 5	P213-14A	P261-6	P241-9B		SYS_DB_5	14	SYS AB 5	P213-14B	P260-6	P241-9A		SYS_AB_5	14	SYS BUSY	P213-14C					SYS_BUSY
15	SYS DB 6	P213-15A	P261-7	P241-10B		SYS_DB_6	15	SYS AB 6	P213-15B	P260-7	P241-10A		SYS_AB_6	15	SYS CS TC	P213-15C					SYS_CSTC
16	SYS DB 7	P213-16A	P261-8	P241-11B		SYS_DB_7	16	SYS AB 7	P213-16B	P260-8	P241-11A		SYS_AB_7	16	SYS CS REMT	P213-16C					SYS_C_RE
17	TC INT	P213-17A				TC_INT	17	SYS AB 8	P213-17B				SYS_AB_8	17	REMT INT	P213-17C					REMT_INT
18							18	SYS AB 9	P213-18B				SYS_AB_9	18	SYS CS VIDEO	P213-18C					SYS_C_VI
19							19	SYS AB 10	P213-19B				SYS_AB10	19							
20							20							20							
21	FULL ERASE	P205-21A				FULL_ERA	21	OSC ON	P205-21B				OSC_ON	21	ERASE CHECK	P205-21C					ERA_CHEK
22	CUE ERASE	P205-22A				CUE_ERA	22	TC ERASE	P205-22B				TC_ERASE	22	CTL ERASE	P205-22C					CTL_ERA
23	CUE REC	P205-23A				CUE_REC	23	TC REC	P205-23B				TC_REC	23	CUE EE	P205-23C					CUE_EE
24	MUTE	P205-24A				MUTE	24	ATT 1	P205-24B				ATT1	24	ATT 2	P205-24C					ATT2
25	CUE REC VR	P205-25A				CUE_R_VR	25	CUE PB VR	P205-25B				CUE_P_VR	25	CUE MIX	P205-25C					CUE_MIX
26	REC LTC	P205-19A				REC_LTC	26	PB LTC	P205-19B				PB_LTC	26							
27							27							27							
28	-5V (D)					-5V (D)	28	-5V (D)					-5V (D)	28	-5V (D)						-5V (D)
29	+5V (D)					+5V (D)	29	+5V (D)					+5V (D)	29	+5V (D)						+5V (D)
30	+5V (D)					+5V (D)	30	+5V (D)					+5V (D)	30	+5V (D)						+5V (D)
31	GND (D)					GND	31	GND (D)					GND	31	GND (D)						GND
32	GND (D)					GND	32	GND (D)					GND	32	GND (D)						GND

P212
PCN13-96S-2.54DSA

S 6

	A	FROM / TO						B	FROM / TO						C	FROM / TO					
1							1							1							
2	T/C IN+	P238-2				T/C_IN+	2	T/C IN-	P238-3				T/C_IN-	2	T/C IN GND	P238-1					T/C_IN_G
3	T/C OUT+	P238-5				T/C_OUT+	3	T/C OUT-	P238-6				T/C_OUT-	3	T/C OUT GND	P238-4					T/C_O_G
4							4							4	X3FRM	P210-4C					X3FRM
5	AC-CTL	P210-5A	P208-7B			AC_CTL	5	SYS_FRM	P210-4B				SYS_FRM	5	AC-CF	P210-5C					AC_CF
6	TRANSMIT A 1	P263-1B				TRANS_A1	6	TRANSMIT A 2	P263-17B				TRANS_A2	6	TRANSMIT A 3	P263-19B					TRANS_A3
7	TRANSMIT B 1	P263-1A				TRANS_B1	7	TRANSMIT B 2	P263-17A				TRANS_B2	7	TRANSMIT B 3	P263-19A					TRANS_B3
8	RECEIVE A 1	P263-2B				RECIV_A1	8	RECEIVE A 2	P263-18B				RECIV_A2	8	RECEIVE A 3	P263-20B					RECIV_A3
9	RECEIVE B 1	P263-2A				RECIV_B1	9	RECEIVE B 2	P263-18A				RECIV_B2	9	RECEIVE B 3	P263-20A					RECIV_B3
10	TXD	P263-4B				TXD	10	RXD	P263-4A				RXD	10	RTS	P263-5B					RTS
11	CTS	P263-5A				CTS	11	DSR	P263-6A				DSR	11	DTR	P263-7B					DTR
12	CHAR SIG	P251-12B				CHAR_SIG	12	CHAR GATE	P251-11B				CHARGATE	12	DCD	P263-6B					DCD
13	SPI HD	P251-18B				SPI_HD	13	SPI VD	P251-17B				SPI_VD	13							
14	PB VITC	P251-16B				PB_VITC	14	PB COMP SYNC	P251-15B				P_C_SYNC	14	PB V SYNC	P251-14B					P_V_SYNC
15	REC CF	P213-19A	P251-10B			REC_CF	15	REC VITC	P251-9B				REC_VITC	15	VITC GATE	P251-8B					VITCGATE
16	4fsc CLK	P249-7				4FSC_CLK	16	REC COMP SYNC	P251-7B				R_C_SYNC	16	REC V SYNC	P213-18A	P251-6B				R_V_SYNC
17	DIO 1	P263-9B				DIO_1	17	DIO 2	P263-10B				DIO_2	17	DIO 3	P263-11B					DIO_3
18	DIO 4	P263-12B				DIO_4	18	DIO 5	P263-13B				DIO_5	18	DIO 6	P263-14B					DIO_6
19	DIO 7	P263-15B				DIO_7	19	DIO 8	P263-16B				DIO_8	19							
20	DAV	P263-9A				DAV	20	NRFD	P263-10A				NRFD	20	NDAC	P263-11A					NDAC
21	ATN	P263-12A				ATN	21	IFC	P263-13A				IFC	21	SRQ	P263-14A					SRQ
22	REM	P263-15A				REN	22	EOI	P263-16A				EOI	22							
23							23							23							
24							24							24							
25	-5V (A)					-5V (A)	25	-5V (A)					-5V (A)	25	-5V (A)						-5V (A)
26	+5V (A)					+5V (A)	26	+5V (A)					+5V (A)	26	+5V (A)						+5V (A)
27	-12V (A)					-12V (A)	27	-12V (A)					-12V (A)	27	-12V (A)						-12V (A)
28	+12V (A)					+12V (A)	28	+12V (A)					+12V (A)	28	+12V (A)						+12V (A)
29	+15V (un)					+15V (UN)	29	+15V (un)					+15V (UN)	29	+15V (un)						+15V (UN)
30	+8V (un)					+8V (UN)	30	+8V (un)					+8V (UN)	30	+8V (un)						+8V (UN)
31	GND (A)					GND	31	GND (A)					GND	31	GND (A)						GND
32	GND (A)					GND	32	GND (A)					GND	32	GND (A)						GND

S MOTHER (P213, P214) SCHEMATIC DIAGRAM (7/14) FOR S7

P213
HIROSE PCN13-96S-2.54DSA

S 7

	A	FROM / TO						B	FROM / TO						C	FROM / TO					
1	GND (D)					GND	1	GND (D)					GND	1	GND (D)						GND
2	AV AD 0	P245-30B	P215-2A	P217-2A	P211-2A	AV_AD_0	2	AV AD 1	P245-29B	P215-2B	P217-2B	P211-2B	AV_AD_1	2	AV AD 2	P211-2C	P245-28B	P215-2C	P217-2C		AV_AD_2
3	AV AD 3	P245-27B	P215-3A	P217-3A	P211-3A	AV_AD_3	3	AV AD 4	P245-26B	P215-3B	P217-3B	P211-3B	AV_AD_4	3	AV AD 5	P211-3C	P245-25B	P215-3C	P217-3C		AV_AD_5
4	AV AD 6	P245-24B	P215-4A	P217-4A	P211-4A	AV_AD_6	4	AV AD 7	P245-23B	P215-4B	P217-4B	P211-4B	AV_AD_7	4	AV ALE	P211-4C	P245-22B	P215-4C	P217-4C		AV_ALE
5	AV AB 8	P245-21B	P215-5A	P217-5A	P211-5A	AV_AB_8	5	AV AB 9	P245-20B	P215-5B	P217-5B	P211-5B	AV_AB_9	5	AV AB 10	P211-5C	P245-19B	P215-5C	P217-5C		AV_AB_10
6	AV AB 11	P245-18B	P215-6A	P217-6A	P211-6A	AV_AB_11	6	AV AB 12	P245-17B	P215-6B	P217-6B	P211-6B	AV_AB_12	6	AV AB 13	P211-6C	P245-16B	P215-6C	P217-6C		AV_AB_13
7	AV AB 14	P245-15B	P215-7A	P217-7A	P211-7A	AV_AB_14	7	AV AB 15	P245-14B	P215-7B	P217-7B	P211-7B	AV_AB_15	7	AV SYS INT	P211-7C	P245-13B				AV_S_INT
8	AV RD	P245-12B	P215-8A	P217-8A	P211-8A	AV_RD	8	AV WR	P245-11B	P215-8B	P217-8B	P211-8B	AV_WR	8	AV BUSY	P211-8C	P245-10B				AV_BUSY
9	SYS DB 0	P261-1	P211-9A	P241-4B		SYS_DB_0	9	SYS AB 0	P260-1	P211-9B	P241-4A		SYS_AB_0	9	SYS RESET	P211-9C	P260-9	P241-12B	P233-10A	P205-9C	SYS_RST
10	SYS DB 1	P261-2	P211-10A	P241-5B		SYS_DB_1	10	SYS AB 1	P260-2	P211-10B	P241-5A		SYS_AB_1	10	SYS IORD	P211-10C	P260-10	P241-12A			SYS_IORD
11	SYS DB 2	P261-3	P211-11A	P241-6B		SYS_DB_2	11	SYS AB 2	P260-3	P211-11B	P241-6A		SYS_AB_2	11	SYS IOWR	P211-11C	P260-11	P241-13A			SYS_IOWR
12	SYS DB 3	P261-4	P211-12A	P241-7B		SYS_DB_3	12	SYS AB 3	P260-4	P211-12B	P241-7A		SYS_AB_3	12	SYS MERD	P211-12C					SYS_MERD
13	SYS DB 4	P261-5	P211-13A	P241-8B		SYS_DB_4	13	SYS AB 4	P260-5	P211-13B	P241-8A		SYS_AB_4	13	SYS MEWR	P211-13C					SYS_MEWR
14	SYS DB 5	P261-6	P211-14A	P241-9B		SYS_DB_5	14	SYS AB 5	P260-6	P211-14B	P241-9A		SYS_AB_5	14	SYS BUSY	P211-14C					SYS_BUSY
15	SYS DB 6	P261-7	P211-15A	P241-10B		SYS_DB_6	15	SYS AB 6	P260-7	P211-15B	P241-10A		SYS_AB_6	15	SYS CS TC	P211-15C					SYS_CSTC
16	SYS DB 7	P261-8	P211-16A	P241-11B		SYS_DB_7	16	SYS AB 7	P260-8	P211-16B	P241-11A		SYS_AB_7	16	SYS CS REMT	P211-16C					SYS_C_RE
17	TC INT	P211-17A				TC_INT	17	SYS AB 8		P211-17B			SYS_AB_8	17	REMT INT	P211-17C					REMT_INT
18	REC V SYNC	P212-16C	P251-6B			R_V_SYNC	18	SYS AB 9		P211-18B			SYS_AB_9	18	SYS CS VIDEO	P211-18C					SYS_C_VI
19	REC CF	P212-15A	P251-10B			REC_CF	19	SYS AB10		P211-19B			SYS_AB10	19							
20	MRST	P208-22C				MRST	20	VCP RESET	P251-5B				VCPRESET	20							
21	DRUM RST	P209-21A				DRUM_RST	21	CAP RST	P209-21B				CAP_RST	21	REEL RST	P209-21C					REEL_RST
22	MCONT 5	P233-9B				MCONT5	22	MCONT 6	P233-9A				MCONT6	22	MCONT 7	P233-16B					MCONT7
23	PINCH ON	P233-10B	P209-8C			PINCH_ON	23	S BRK ON	P233-11B				S_BRK_ON	23	T BRK ON	P233-11A					T_BRK_ON
24	MCONT 1	P233-13B				MCONT_1	24	STP ON	P233-12B				STOP_ON	24	CLEAN ON	P233-12A					CLEAN_ON
25	MCONT 2	P263-13A				MCONT_2	25	MCONT 3	P233-14B				MCONT_3	25	MOCNT 4	P233-14A					MCONT_4
26	T REEL DRV ON	P233-15B				T_R_D_ON	26	S REEL DRV ON	P233-15A				S_R_D_ON	26	MCONT 8	P233-16A					MCONT8
27							27							27							
28	-5V (D)					-5V (D)	28	-5V (D)					-5V (D)	28	-5V (D)						-5V (D)
29	+5V (D)					+5V (D)	29	+5V (D)					+5V (D)	29	+5V (D)						+5V (D)
30	+5V (D)					+5V (D)	30	+5V (D)					+5V (D)	30	+5V (D)						+5V (D)
31	GND (D)					GND	31	GND (D)					GND	31	GND (D)						GND
32	GND (D)					GND	32	GND (D)					GND	32	GND (D)						GND

P214
HIROSE PCN13-96S-2.54DSA

S 7

	A	FROM / TO						B	FROM / TO						C	FROM / TO					
1							1							1							
2	F-SER A DATA +	P246-1				FS_A_DA+	2	F-SER B DATA +	P246-5				FS_B_DA+	2	F-SER STB +	P246-9					FS_STB+
3	F-SER A DATA -	P246-2				FS_A_DA-	3	F-SER B DATA -	P246-6				FS_B_DA-	3	F-SER STB -	P246-10					FS_STB-
4	F-SER A EN +	P246-3				FS_A_EN+	4	F-SER B EN +	P246-7				FS_B_EN+	4	F-SER CLK +	P246-11					FS_CLK+
5	F-SER A EN -	P246-4				FS_A_EN-	5	F-SER B EN -	P246-8				FS_B_EN-	5	F-SER CLK -	P246-12					FS_CLK-
6	S-SER A DATA	P210-6A				SS_A_DA+	6	SER_ADR0	P210-6B	P208-6C			SER_ADR0	6	S-SER SEL 0	P210-6C					SS_SEL_0
7	S-SER B DATA	P210-7A				SS_B_DA+	7	SER_ADR1	P210-7B	P208-7C			SER_ADR1	7	S-SER SEL 1	P210-7C					SS_SEL_1
8	S-SER CLK	P210-8A				SS_CLK	8	SER_ADR2	P210-8B	P208-8C			SER_ADR2	8	CAP DIR	P210-8C	P216-8C	P251-20B			CAP_DIR
9	S-FG	P210-9A				S_FG	9	T-FG	P210-9B				T_FG	9	CAP FGP	P210-9C	P216-9C	P251-19B			CAP_FGP
10	CASS DET A	P242-2B				CS_DET_A	10	CASS DET B	P242-3B				CS_DET_B	10	CASS DET C	P242-4B					CS_DET_C
11	S PHOTO	P242-7B				S_PHOTO	11	CASS IN SW L	P242-5B				CS_I_S_L	11	CASS IN SW R	P242-6B					CS_I_S_R
12	T PHOTO	P242-8B				T_PHOTO	12	CASS UP SW	P242-1A				CS_UP_SW	12	CASS DOWN SW	P242-2A					CS_DO_SW
13	SUB LOAD START	P242-9B				SL_START	13	L CASS IN	P242-3A				L_CS_IN	13	M CASS IN	P242-4A					M_CS_IN
14	SUB LOAD END	P242-10B				SL_END	14	MAIN LOAD START	P242-8A				ML_START	14	REEL POS FRONT	P242-5A					RP_FRONT
15	CASS DET F	P242-11B				CS_DET_F	15	MAIN LOAD END	P242-9A				ML_END	15	REEL POS CENTER	P242-6A					RP_CNTER
16	CASS DET R	P242-12B				CS_DET_R	16	MAIN LOAD CENTER	P242-10A				ML_CNTER	16	REEL POS BACK	P242-7A					RP_BACK
17	CASS DET S	P242-13B				CS_DET_S	17	SENS LED A	P242-12A				SEN_LEDA	17	DEW SENS	P242-11A					DEW_SENS
18	CASS DET T	P242-14B				CS_DET_T	18	SENS LED K	P242-13A				SEN_LEDK	18	EJECT KEY	P247-1					EJE_KEY
19	SER H SW	P210-18A	P256-1	P201-23B		SER_H_SW	19	AUTO OFF LAMP	P247-4				A_O_LAMP	19	EJECT LAMP	P247-2					EJE_LAMP
20	REC MODE	P256-4	P202-22A			REC_MODE	20	SUB LOAD CEN	P242-1B				SL_CNTER	20	RF WFM SELECT 0	P202-21C	P204-21C				RF_WFM_0
21	PB MODE	P202-21A	P204-21A			PB_MODE	21	TEST MODE	P256-3	P202-24A			TESTMODE	21	RF WFM SELECT 1	P202-22C	P204-22C				RF_WFM_1
22	REC CURR CH0	P240-1	P202-22B			R_C_C_0	22	EQ GAIN CH0	P202-23A	P204-24A			EQ_GAIN0	22	EQ FREQ CH 0	P202-23C	P204-24C				EQ_FREQ0
23	REC CURR CH1	P240-2	P202-21B			R_C_C_1	23	EQ GAIN CH1	P204-23A				EQ_GAIN1	23	EQ FREQ CH 1	P204-23C					EQ_FREQ1
24							24							24							
25	-5V (A)					-5V (A)	25	-5V (A)					-5V (A)	25	-5V (A)						-5V (A)
26	+5V (A)					+5V (A)	26	+5V (A)					+5V (A)	26	+5V (A)						+5V (A)
27	-12V (A)					-12V (A)	27	-12V (A)					-12V (A)	27	-12V (A)						-12V (A)
28	+12V (A)					+12V (A)	28	+12V (A)					+12V (A)	28	+12V (A)						+12V (A)
29	+15V (un)					+15V (UN)	29	+15V (un)					+15V (UN)	29	+15V (un)						+15V (UN)
30	+8V (un)					+8V (UN)	30	+8V (un)					+8V (UN)	30	+8V (un)						+8V (UN)
31	GND (A)					GND	31	GND (A)					GND	31	GND (A)						GND
32	GND (A)					GND	32	GND (A)					GND	32	GND (A)						GND

S MOTHER (P215, P216) SCHEMATIC DIAGRAM (8/14) FOR S8

P215
HIROSE PCN13-96S-2.54DSA

S 8

	A	FROM / TO						B	FROM / TO						C	FROM / TO					
1	GND (D)						GND	1	GND (D)					GND	1	GND (D)						GND
2	AV AD 0	P213-2A	P217-2A	P245-30B	P211-2A		AV_AD_0	2	AV AD 1	P213-2B	P217-2B	P245-29B	P211-2B	AV_AD_1	2	AV AD 2	P213-2C	P217-2C	P245-28B	P211-2C	AV_AD_2
3	AV AD 3	P213-3A	P217-3A	P245-27B	P211-3A		AV_AD_3	3	AV AD 4	P213-3B	P217-3B	P245-26B	P211-3B	AV_AD_4	3	AV AD 5	P213-3C	P217-3C	P245-25B	P211-3C	AV_AD_5
4	AV AD 6	P213-4A	P217-4A	P245-24B	P211-4A		AV_AD_6	4	AV AD 7	P213-4B	P217-4B	P245-23B	P211-4B	AV_AD_7	4	AV ALE	P213-4C	P217-4C	P245-22B	P211-4C	AV_ALE
5	AV AB 8	P213-5A	P217-5A	P245-21B	P211-5A		AV_AB_8	5	AV AB 9	P213-5B	P217-5B	P245-20B	P211-5B	AV_AB_9	5	AV AB 10	P213-5C	P217-5C	P245-19B	P211-5C	AV_AB_10
6	AV AB 11	P213-6A	P217-6A	P245-18B	P211-6A		AV_AB_11	6	AV AB 12	P213-6B	P217-6B	P245-17B	P211-6B	AV_AB_12	6	AV AB 13	P213-6C	P217-6C	P245-16B	P211-6C	AV_AB_13
7	AV AB 14	P213-7A	P217-7A	P245-15B	P211-7A		AV_AB_14	7	AV AB 15	P213-7B	P217-7B	P245-14B	P211-7B	AV_AB_15	7						
8	AV RD	P213-8A	P217-8A	P245-12B	P211-8A		AV_RD	8	AV WR	P213-8B	P217-8B	P245-11B	P211-8B	AV_WR	8						
9	AV RESET	P217-9A	P245-11B	P245-9B			AV_RESET	9							9						
10								10							10						
11								11							11						
12	ASD 1	P245-30A					ASD_1	12							12	ASD 3	P245-29A				ASD_3
13								13							13						
14	DSD 1	P245-28A					DSD_1	14							14	DSD 3	P245-27A				DSD_3
15								15	DSD L	P245-26A				DSD_L	15						
16	PBD 1 2	P245-25A					PBD_12	16	PBD 3 4	P245-24A				PBD_34	16						
17	STD	P245-23A					STD	17	STFLG	P245-22A				STFLG	17	BLK_SYNC	P245-2A				BLK_SYNC
18								18							18						
19								19							19						
20	MUTE 1 2	P245-21A					MUTE_12	20	MUTE 3 4	P245-20A				MUTE_34	20						
21								21							21						
22	VALIDF	P245-19A					VALIDF	22	PB5F	P245-18A				PB5F	22	FILD	P245-17A				FILD
23								23							23						
24	AU DATA IN 0	P245-16A					AU_D_IN0	24	AU DATA IN 1	P245-15A				AU_D_IN1	24	AU DATA IN 2	P245-14A				AU_D_IN2
25	AU DATA IN 3	P245-13A					AU_D_IN3	25	AU DATA IN 4	P245-12A				AU_D_IN4	25	AU DATA IN 5	P245-11A				AU_D_IN5
26	AU DATA IN 6	P245-10A					AU_D_IN6	26	AU DATA IN 7	P245-9A				AU_D_IN7	26						
27								27							27						
28	-5V (D)						-5V (D)	28	-5V (D)					-5V (D)	28	-5V (D)					-5V (D)
29	+5V (D)						+5V (D)	29	+5V (D)					+5V (D)	29	+5V (D)					+5V (D)
30	+5V (D)						+5V (D)	30	+5V (D)					+5V (D)	30	+5V (D)					+5V (D)
31	GND (D)						GND	31	GND (D)					GND	31	GND (D)					GND
32	GND (D)						GND	32	GND (D)					GND	32	GND (D)					GND

P216
PCN13-96S-2.54DSA

S 8

	A	FROM / TO					B	FROM / TO					C	FROM / TO					
1							1						1						
2	PB RST (INIT)	P251-30B				PB_RST	2	FS 128	P251-29B				FS_128	2	DIF CK	P268-1				DIF_CK
3							3							3	DIF CK	P268-2				-DIF_CK
4	DBCK	P268-4				DBCK	4	DBCK	P268-5				-DBCK	4						
5	BCK	P251-28B				BCK	5	WCK	P251-27B				WCK	5						
6	ST 0	P251-26B				ST_0	6	ST 1	P251-25B				ST_1	6	ST 2	P251-24B				ST_2
7	ST 3	P251-23B				ST_3	7	FSD	P251-22B				FSD	7						
8	FSA	P251-21B				FSA	8							8	CAP DIR	P210-8C	P214-8C	P251-20B		CAP_DIR
9							9							9	CAP FGP	P210-9C	P214-9C	P251-19B		CAP_FGP
10							10							10						
11							11	CUE METER GND	P206-7B				CUE_M_G	11	CUE METER	P206-7C				CUEMETER
12							12							12						
13							13							13						
14							14							14						
15							15							15						
16	CUE D GND	P206-16A				CUE_D_G	16	CUE D C	P206-16B				CUE_D_C	16	CUE D H	P206-16C				CUE_D_H
17							17							17						
18	DAI 1A	P269-1				DAI_1A	18	DAI 1B	P269-2				DAI_1B	18	DAI 1 GND	P269-3				DAI_1_G
19	DAI 2A	P269-4				DAI_2A	19	DAI 2B	P269-5				DAI_2B	19	DAI 2 GND	P269-6				DAI_2_G
20	DAO 1A	P269-7				DAO_1A	20	DAO 1B	P269-8				DAO_1B	20	DAO 1 GND	P269-9				DAO_1_G
21	DAO 2A	P269-10				DAO_2A	21	DAO 2B	P269-11				DAO_2B	21	DAO 2 GND	P269-12				DAO_2_G
22	VA CNT 1A	P270-1				VACNT1A	22	VA CNT 1B	P270-2				VACNT1B	22	VA CNT 1 GND	P270-3				VACNT1G
23	VA CNT 2A	P270-4				VACNT2A	23	VA CNT 2B	P270-5				VACNT2B	23	VA CNT 2 GND	P270-6				VACNT2G
24							24							24						
25	-5V (A)					-5V (A)	25	-5V (A)					-5V (A)	25	-5V (A)					-5V (A)
26	+5V (A)					+5V (A)	26	+5V (A)					+5V (A)	26	+5V (A)					+5V (A)
27	-12V (A)					-12V (A)	27	-12V (A)					-12V (A)	27	-12V (A)					-12V (A)
28	+12V (A)					+12V (A)	28	+12V (A)					+12V (A)	28	+12V (A)					+12V (A)
29	+15V (un)					+15V (UN)	29	+15V (un)					+15V (UN)	29	+15V (un)					+15V (UN)
30	+8V (un)					+8V (UN)	30	+8V (un)					+8V (UN)	30	+8V (un)					+8V (UN)
31	GND (A)					GND	31	GND (A)					GND	31	GND (A)					GND
32	GND (A)					GND	32	GND (A)					GND	32	GND (A)					GND

S MOTHER (P217, P218) SCHEMATIC DIAGRAM (9/14) FOR S9)

P217
HIROSE PCN-13-96S-2.54DSA
S 9

	A	FROM / TO						B	FROM / TO						C	FROM / TO					
1	GND (D)					⊢ GND	1	GND (D)					⊢ GND	1	GND (D)					⊢ GND
2	AV AD 0	P213-2A	P215-2A	P245-30B	P211-2A	⊢ AV_AD_0	2	AV AD 1	P213-2B	P215-2B	P245-29B	P211-2B	⊢ AV_AD_1	2	AV AD 2	P213-2C	P215-2C	P245-28B	P211-2C	⊢ AV_AD_2
3	AV AD 3	P213-3A	P215-3A	P245-27B	P211-3A	⊢ AV_AD_3	3	AV AD 4	P213-3B	P215-3B	P245-26B	P211-3B	⊢ AV_AD_4	3	AV AD 5	P213-3C	P215-3C	P245-25B	P211-3C	⊢ AV_AD_5
4	AV AD 6	P213-4A	P215-4A	P245-24B	P211-4A	⊢ AV_AD_6	4	AV AD 7	P213-4B	P215-4B	P245-23B	P211-4B	⊢ AV_AD_7	4	AV ALE	P213-4C	P215-4C	P245-22B	P211-4C	⊢ AV_ALE
5	AV AB 8	P213-5A	P215-5A	P245-21B	P211-5A	⊢ AV_AB_8	5	AV AB 9	P213-5B	P215-5B	P245-20B	P211-5B	⊢ AV_AB_9	5	AV AB 10	P213-5C	P215-5C	P245-19B	P211-5C	⊢ AV_AB_10
6	AV AB 11	P213-6A	P215-6A	P245-18B	P211-6A	⊢ AV_AB_11	6	AV AB 12	P213-6B	P215-6B	P245-17B	P211-6B	⊢ AV_AB_12	6	AV AB 13	P213-6C	P215-6C	P245-16B	P211-6C	⊢ AV_AB_13
7	AV AB 14	P213-7A	P215-7A	P245-15B	P211-7A	⊢ AV_AB_14	7	AV AB 15	P213-7B	P215-7B	P245-14B	P211-7B	⊢ AV_AB_15	7						
8	AV RD	P213-8A	P215-8A	P245-12B	P211-8A	⊢ AV_RD	8	AV WR	P213-8B	P215-8B	P245-11B	P211-8B	⊢ AV_WR	8						
9	AV RESET	P215-9A	P245-11B	P245-9B		⊢ AV_RESET	9							9						
10							10							10						
11							11							11						
12							12							12						
13							13							13						
14							14							14						
15							15							15						
16							16							16						
17							17							17						
18							18							18						
19							19							19						
20							20							20						
21							21							21						
22							22							22						
23							23							23						
24							24							24						
25							25							25						
26							26							26						
27							27							27						
28	-5V (D)					⊢ -5V (D)	28	-5V (D)					⊢ -5V (D)	28	-5V (D)					⊢ -5V (D)
29	+5V (D)					⊢ +5V (D)	29	+5V (D)					⊢ +5V (D)	29	+5V (D)					⊢ +5V (D)
30	+5V (D)					⊢ +5V (D)	30	+5V (D)					⊢ +5V (D)	30	+5V (D)					⊢ +5V (D)
31	GND (D)					⊢ GND	31	GND (D)					⊢ GND	31	GND (D)					⊢ GND
32	GND (D)					⊢ GND	32	GND (D)					⊢ GND	32	GND (D)					⊢ GND

P218
HIROSE PCN13-96S-2.54DSA
S 9

	A	FROM / TO					B	FROM / TO					C	FROM / TO				
1							1						1					
2							2						2					
3	AV VS	P251-30A				⊢ AV_VS	3						3					
4	AV CS	P251-29A				⊢ AV_CS	4	AV $\overline{CS}$	P251-28A				⊢ -AV_CS	4				
5	AV SC	P251-27A				⊢ AV_SC	5	AV $\overline{SC}$	P251-26A				⊢ -AV_SC	5				
6	AV LALT	P251-25A				⊢ AV_LALT	6							6				
7	AV FRM	P251-24A				⊢ AV_FRM	7							7				
8	AV CF	P251-23A				⊢ AV_CF	8							8				
9	AV HD	P251-22A				⊢ AV_HD	9	AV $\overline{HD}$	P251-21A				⊢ -AV_HD	9				
10	AV CLK	P251-20A				⊢ AV_CLK	10	AV $\overline{CLK}$	P251-19A				⊢ -AV_CLK	10				
11							11							11				
12	AV DATA 0	P251-18A				⊢ +AVDATA0	12	AV $\overline{DATA\ 0}$	P251-17A				⊢ -AVDATA0	12				
13	AV DATA 1	P251-16A				⊢ +AVDATA1	13	AV DATA $\overline{1}$	P251-15A				⊢ -AVDATA1	13				
14	AV DATA 2	P251-14A				⊢ +AVDATA2	14	AV DATA $\overline{2}$	P251-13A				⊢ -AVDATA2	14				
15	AV DATA 3	P251-12A				⊢ +AVDATA3	15	AV DATA $\overline{3}$	P251-11A				⊢ -AVDATA3	15				
16	AV DATA 4	P251-10A				⊢ +AVDATA4	16	AV DATA $\overline{4}$	P251-9A				⊢ -AVDATA4	16				
17	AV DATA 5	P251-8A				⊢ +AVDATA5	17	AV DATA $\overline{5}$	P251-7A				⊢ -AVDATA5	17				
18	AV DATA 6	P251-6A				⊢ +AVDATA6	18	AV DATA $\overline{6}$	P251-5A				⊢ -AVDATA6	18				
19	AV DATA 7	P251-4A				⊢ +AVDATA7	19	AV DATA $\overline{7}$	P251-3A				⊢ -AVDATA7	19				
20							20							20				
21							21	REC INPUT VIDEO GND	P249-2				⊢ R_IN_V_G	21	REC INPUT VIDEO	P249-1			⊢ R_IN_V
22							22							22				
23	GND (A)					⊢ GND	23	GND (A)					⊢ GND	23	GND (A)				⊢ GND
24	+5V (A)					⊢ +5V (A)	24	+5V (A)					⊢ +5V (A)	24	+5V (A)				⊢ +5V (A)
25	-5V (A)					⊢ -5V (A)	25	-5V (A)					⊢ -5V (A)	25	-5V (A)				⊢ -5V (A)
26	+5V (A)					⊢ +5V (A)	26	+5V (A)					⊢ +5V (A)	26	+5V (A)				⊢ +5V (A)
27	-12V (A)					⊢ -12V (A)	27	-12V (A)					⊢ -12V (A)	27	-12V (A)				⊢ -12V (A)
28	+12V (A)					⊢ +12V (A)	28	+12V (A)					⊢ +12V (A)	28	+12V (A)				⊢ +12V (A)
29	+15V (un)					⊢ +15V (UN)	29	+15V (un)					⊢ +15V (UN)	29	+15V (un)				⊢ +15V (UN)
30	+8V (un)					⊢ +8V (UN)	30	+8V (un)					⊢ +8V (UN)	30	+8V (un)				⊢ +8V (UN)
31	GND (A)					⊢ GND	31	GND (A)					⊢ GND	31	GND (A)				⊢ GND
32	GND (A)					⊢ GND	32	GND (A)					⊢ GND	32	GND (A)				⊢ GND

S MOTHER (P233, P241) SCHEMATIC DIAGRAM (10/14)

P233
HIROSE PCN13-96S-2.54DSA

FROM / TO					A		B	FROM / TO				
GND					AG	1	AG					GND
STOP_L				P209-10A	DRUM STOP L	2	DRUM BRK L	P209-9C				BRAKE_L
D_SW_L				P209-11C	DRUM SW L	3	D ERR	P209-10B				D_ERR
DRVAG			P209-13B	P209-12C	AG (D&C)	4	AG (D&C)	P209-10C	P209-11B			DRVAG
CAP_ERR				P209-12B	CAP ERR	5	CAP EDS	P209-12A				CAP_EDS
						6	CAP RCC	P209-13C				CAP_RCC
S_R_ERR				P209-14B	S R ERR	7	T R ERR	P209-14A				T_R_ERR
						8	2.5V	P209-14C				2.5V
MCONT6				P213-22B	MCONT 6	9	MCONT 5	P213-22A				MCONT5
SYS_RST	P211-9C	P241-12B	P260-9	P213-9C	SYS RESET	10	PINCH ON	P213-23A	P209-8C			PINCH_ON
T_BRK_ON				P213-23C	T BRK ON	11	S BRK ON	P213-23B				S_BRK_ON
CLEAN_ON				P213-24C	CLEN ON	12	STOP ON	P213-24B				STOP_ON
MCONT_2				P213-25A	MCONT 2	13	MCONT 1	P213-24A				MCONT_1
MCONT_4				P213-25C	MCONT 4	14	MCONT 3	P213-25B				MCONT_3
S_R_D_ON				P213-26B	S REEL DRV ON	15	T REEL DRV ON	P213-26A				T_R_D_ON
MCONT8				P213-26C	MCONT 8	16	MCONT 7	P213-22C				MCONT7

P241
HIROSE PCN13-96S-2.54DSA
S

FROM / TO					A		B	FROM / TO					
+12V (A)					+12V (A)	1	+12V (A)						+12V (A)
+5V (D)					+5V (D)	2	+5V (D)						+5V (D)
GND					GND (D)	3	GND (D)						GND
SYS_AB_0		P260-1	P211-9B	P213-9B	SYS AB 0	4	SYS DB 0	P261-1	P211-9A	P213-9A			SYS_DB_0
SYS_AB_1		P260-2	P211-10B	P213-10B	SYS AB 1	5	SYS DB 1	P261-2	P211-10A	P213-10A			SYS_DB_1
SYS_AB_2		P260-3	P211-11B	P213-11B	SYS AB 2	6	SYS DB 2	P261-3	P211-11A	P213-11A			SYS_DB_2
SYS_AB_3		P260-4	P211-12B	P213-12B	SYS AB 3	7	SYS DB 3	P261-4	P211-12A	P213-12A			SYS_DB_3
SYS_AB_4		P260-5	P211-13B	P213-13B	SYS AB 4	8	SYS DB 4	P261-5	P211-13A	P213-13A			SYS_DB_4
SYS_AB_5		P260-6	P211-14B	P213-14B	SYS AB 5	9	SYS DB 5	P261-6	P211-14A	P213-14A			SYS_DB_5
SYS_AB_6		P260-7	P211-15B	P213-15B	SYS AB 6	10	SYS DB 6	P261-7	P211-15A	P213-15A			SYS_DB_6
SYS_AB_7		P260-8	P211-16B	P213-16B	SYS AB 7	11	SYS DB 7	P261-8	P211-16A	P213-16A			SYS_DB_7
SYS_IORD		P260-10	P211-10C	P213-10C	SYS IORD	12	SYS RESET	P260-9	P211-9C	P213-9C	P233-10A	P205-9C	SYS_RST
SYS_IOWR		P260-11	P211-11C	P213-11C	SYS IOWR	13							

D C B A

1 2 3 4 5 6

S MOTHER (P242, P245) SCHEMATIC DIAGRAM (11/14)

P242
HIROSE PCN13-96S-2.54DA/FITS

FROM / TO					A		B	FROM / TO				
CS_UP_SW				P214-12B	CASS UP SW	1	SUB LOAD CEN	P214-20B				SL_CNTER
CS_DO_SW				P214-12C	CASS DOWN SW	2	CASS DET A	P214-10A				CS_DET_A
L_CS_IN				P214-13B	L CASS IN	3	CASS DET B	P214-10B				CS_DET_B
M_CS_IN				P214-13C	M CASS IN	4	CASS DET C	P214-10C				CS_DET_C
RP_FRONT				P214-14C	REEL POS FRONT	5	CASS IN SW L	P214-11B				CS_I_S_L
RP_CNTER				P214-15C	REEL POS CENTER	6	CASS IN SW R	P214-11C				CS_I_S_R
RP_BACK				P214-16C	REEL POS BACK	7	S PHOTO	P214-11A				S_PHOTO
ML_START				P214-14B	MAIN LOAD START	8	T PHOTO	P214-12A				T_PHOTO
ML_END				P214-15B	MAIN LOAD END	9	SUB LOAD START	P214-13A				SL_START
ML_CNTER				P214-16B	MAIN LOAD CENTER	10	SUB LOAD END	P214-14A				SL_END
DEW_SENS				P214-17C	DEW SENS	11	CASS DET F	P214-15A				CS_DET_F
SEN_LEDA				P214-17B	SENS LED A	12	CASS DET R	P214-16A				CS_DET_R
SEN_LEDK				P214-18B	SENS LED K	13	CASS DET S	P214-17A				CS_DET_S
						14	CASS DET T	P214-18A				CS_DET_T
						15						
						16						

P245
HIROSE PCN13-96S-2.54DSA
S

FROM / TO					A		B	FROM / TO				
GND					GND (D)	1	GND (D)					GND
BLK_SYNC				P215-17C	BLK_SYNC	2	TEST EE2	P203-20A	P201-20A	P502-11		TEST_EE2
PB_H_SW				P209-17C	PB HSW	3	ENV DET CH1	P204-14A				ENV_DET1
P_TP_FRM				P209-17B	PB TP FRAME	4	ENV DET CH0	P202-14A	P204-9A			ENV_DET0
FV/8				P209-17A	FV/8	5	SEG_VAG	P207-10B				SEG_VAG
FV/4				P209-16C	FV/4	6	PB_FNO	P207-10A				PB_FNO
FV/2			P207-16B	P209-16B	FV/2	7	SEG 1	P207-9B				SEG_1
90/100HZ				P209-16A	90/100 HZ	8	SEG 0	P207-9A				SEG_0
AU_D_IN7				P215-26B	AU DATA IN 7	9	AV RESET	P215-9A	P217-9A			AV_RESET
AU_D_IN6				P215-26A	AU DATA IN 6	10	AV BUSY	P213-8C	P211-8C			AV_BUSY
AU_D_IN5				P215-25C	AU DATA IN 5	11	AV WR	P217-8B	P215-8B	P213-8B	P211-8B	AV_WR
AU_D_IN4				P215-25B	AU DATA IN 4	12	AV RD	P217-8A	P215-8A	P213-8A	P211-8A	AV_RD
AU_D_IN3				P215-25A	AU DATA IN 3	13	AV SYS INT	P213-7C			P211-7C	AV_S_INT
AU_D_IN2				P215-24C	AU DATA IN 2	14	AV AB 15	P217-7B	P215-7B	P213-7B	P211-7B	AV_AB_15
AU_D_IN1				P215-24B	AU DATA IN 1	15	AV AB 14	P217-7A	P215-7A	P213-7A	P211-7A	AV_AB_14
AU_D_IN0				P215-24A	AU DATA IN 0	16	AV AB 13	P217-6C	P215-6C	P213-6C	P211-6C	AV_AB_13
FILD				P215-22C	FILD	17	AV AB 12	P217-6B	P215-6B	P213-6B	P211-6B	AV_AB_12
PB5F				P215-22B	PB5F	18	AV AB 11	P217-6A	P215-6A	P213-6A	P211-6A	AV_AB_11
VALIDF				P215-22A	VALIDF	19	AV AB 10	P217-5C	P215-5C	P213-5C	P211-5C	AV_AB_10
MUTE_34				P215-20B	MUTE 34	20	AV AB 9	P217-5B	P215-5B	P213-5B	P211-5B	AV_AB_9
MUTE_12				P215-20A	MUTE 12	21	AV AB 8	P217-5A	P215-5A	P213-5A	P211-5A	AV_AB_8
STFLG				P215-17B	STFLG	22	AV ALE	P217-4C	P215-4C	P213-4C	P211-4C	AV_ALE
STO				P215-17A	STO	23	AV AD 7	P217-4B	P215-4B	P213-4B	P211-4B	AV_AD_7
PBD_34				P215-16B	PBD 34	24	AV AD 6	P217-4A	P215-4A	P213-4A	P211-4A	AV_AD_6
PBD_12				P215-16A	PBD 12	25	AV AD 5	P217-3C	P215-3C	P213-3C	P211-3C	AV_AD_5
OSD_L				P215-15B	OSD L	26	AV AD 4	P217-3B	P215-3B	P213-3B	P211-3B	AV_AD_4
OSD_3				P215-14C	OSD 3	27	AV AD 3	P217-3A	P215-3A	P213-3A	P211-3A	AV_AD_3
OSD_1				P215-14A	OSD1	28	AV AD 2	P217-2C	P215-2C	P213-2C	P211-2C	AV_AD_2
ASD_3				P215-12C	ASD 3	29	AV AD 1	P217-2B	P215-2B	P213-2B	P211-2B	AV_AD_1
ASD_1				P215-12A	ASD 1	30	AV AD 0	P217-2A	P215-2A	P213-2A	P211-2A	AV_AD_0

D C B A

1 2 3 4

S MOTHER (P251, P263) SCHEMATIC DIAGRAM (12/14)

S MOTHER SCHEM

P251
HIROSE PCN13-96S-2.54DSA
S

FROM / TO					A		B	FROM / TO				
GND					GND (D)	1	GND (D)					GND
*						2						*
-AVDATA7				P218-19B	AV DATA 7	3						*
+AVDATA7				P218-19A	AV DATA 7	4						*
-AVDATA6				P218-18B	AV DATA 6	5	VCP RESET	P213-20B				VCPRESET
+AVDATA6				P218-18A	AV DATA 6	6	REC V SYNC	P213-18A	P212-16C			R_V_SYNC
-AVDATA5				P218-17B	AV DATA 5	7	REC COMP SYNC	P212-16B				R_C_SYNC
+AVDATA5				P218-17A	AV DATA 5	8	VITC GATE	P212-15C				VITCGATE
-AVDATA4				P218-16B	AV DATA 4	9	REC VITC	P212-15B				REC_VITC
+AVDATA4				P218-16A	AV DATA 4	10	REC CF	P213-19A	P212-15A			REC_CF
-AVDATA3				P218-15B	AV DATA 3	11	CHAR GATE	P212-12B				CHARGATE
+AVDATA3				P218-15A	AV DATA 3	12	CHAR SIG	P212-12A				CHAR_SIG
-AVDATA2				P218-14B	AV DATA 2	13	REC_H_SW	P210-11B	P208-11B			REC_H_SW
+AVDATA2				P218-14A	AV DATA 2	14	PB V SYNC	P212-14C				P_V_SYNC
-AVDATA1				P218-13B	AV DATA 1	15	PB COMP SYNC	P212-14B				P_C_SYNC
+AVDATA1				P218-13A	AV DATA 1	16	PB VITC	P212-14A				PB_VITC
-AVDATA0				P218-12B	AV DATA 0	17	SPI VD	P212-13B				SPI_VD
+AVDATA0				P218-12A	AV DATA 0	18	SPI HD	P212-13A				SPI_HD
-AV_CLK				P218-10B	AV CLK	19	CAP FGP	P216-9C	P214-9C	P210-9C		CAP_FGP
AV_CLK				P218-10A	AV CLK	20	CAP DIR	P216-8C	P214-8C	P210-8C		CAP_DIR
-AV_HD				P218-9B	AV HD	21	FSA	P216-8A				FSA
AV_HD				P218-9A	AV HD	22	FSD	P216-7B				FSD
AV_CF				P218-8A	AV CF	23	ST 3	P216-7A				ST_3
AV_FRM				P218-7A	AV FRM	24	ST 2	P216-6C				ST_2
AV_LALT				P218-6A	AV LALT	25	ST 1	P216-6B				ST_1
-AV_SC				P218-5B	AV SC	26	ST 0	P216-6A				ST_0
AV_SC				P218-5A	AV SC	27	WCK	P216-5B				WCK
-AV_CS				P218-4B	AV CS	28	BCK	P216-5A				BCK
AV_CS				P218-4A	AV CS	29	FS 128	P216-2B				FS_128
AV_VS				P218-3A	AV VS	30	PB RST (INIT)	P216-2A				PB_RST

P263
HIROSE PCN13-96S-2.54DSA
S

FROM / TO					A		B	FROM / TO				
TRANS_B1				P212-7A	TRANSMIT B1	1	TRANSMIT A1	P212-6A				TRANS_A1
RECIV_B1				P212-9A	RECEIVE B1	2	RECEIVE A1	P212-8A				RECIV_A1
GND					GND (D)	3	GND (D)					GND
RXD				P212-10B	RXD	4	TXD	P212-10A				TXD
CTS				P212-11A	CTS	5	RTS	P212-10C				RTS
DSR				P212-11B	DSR	6	DCD	P212-12C				DCD
*						7	DTR	P212-11C				DTR
GND					GND (D)	8	GND (D)					GND
DAV				P212-20A	DAV	9	DIO 1	P212-17A				DIO_1
NRFD				P212-20B	NRFD	10	DIO 2	P212-17B				DIO_2
NDAC				P212-20C	NDAC	11	DIO 3	P212-17C				DIO_3
ATN				P212-21A	ATN	12	DIO 4	P212-18A				DIO_4
IFC				P212-21B	IFC	13	DIO 5	P212-18B				DIO_5
SRQ				P212-21C	SRQ	14	DIO 6	P212-18C				DIO_6
REN				P212-22A	REN	15	DIO 7	P212-19A				DIO_7
EOI				P212-22B	EOI	16	DIO 8	P212-19B				DIO_8
TRANS_B2				P212-7B	TRANSMIT B2	17	TRANSMIT A2	P212-6B				TRANS_A2
RECIV_B2				P212-9B	RECEIVE B2	18	RECEIVE A2	P212-8B				RECIV_A2
TRANS_B3				P212-7C	TRANSMIT B3	19	TRANSMIT A3	P212-6C				TRANS_A3
RECIV_B3				P212-9C	RECEIVE B3	20	RECEIVE A3	P212-8C				RECIV_A3

P219

1	E-E CH0
2	E-E CH0
3	E-E CH0 GND
4	H SW CH0

P220

1	PB DATA CH0
2	PB DATA CH0
3	PB DATA CH0 GND
4	PB CLOCK CH0
5	PB CLOCK CH0
6	PB CLOCK CH0 GND
7	PB DATA CH1
8	PB DATA CH1
9	PB DATA CH1 GND
10	PB CLOCK CH1
11	PB CLOCK CH1
12	PB CLOCK CH1 GND

P221

1	AT CH0 A
2	AT CH0 A
3	AT CH0 A GND
4	AT CH0 B
5	AT CH0 B
6	AT CH0 B GND
7	AT CH1 A
8	AT CH1 A
9	AT CH1 A GND
10	AT CH1 B
11	AT CH1 B
12	AT CH1 B GND

P222

1	+40V (un)
2	+24V (un)
3	GND (un)
4	GND (un)

P224

1	E-E CH1
2	E-E CH1
3	E-E CH1 GND
4	H SW CH1

P226

1	+40V (un)
2	+40V (un)
3	+24V (un)
4	GND (un)
5	GND (un)
6	-5V (A)
7	+5V (A)
8	-12V (A)
9	+12V (A)
10	+15V (UN)
11	GND (A)
12	+5V (D)

MOTHER SCHEMATIC DIAGRAM (13/14)

P219		FROM / TO				
1	E-E CH0	P202-5A	P204-7A			+EE_CH0
2	E-E CH0	P202-5C	P204-7C			-EE_CH0
3	E-E CH0 GND	P202-4A	P202-6C	P204-6A	P204-8C	GND
4	H SW CH0	P203-23B	P201-22B			H_SW0

P220		FROM / TO				
1	PB DATA CH0	P202-16A	P204-11A			+PBDA_0
2	PB DATA CH0	P202-16C	P204-10C			-PBDA_0
3	PB DATA CH0 GND	P202-15A	P202-17C	P204-11C	P204-10A	GND
4	PB CLOCK CH0	P202-18A	P204-13A			+PB_CLC0
5	PB CLOCK CH0	P202-18C	P204-12C			-PB_CLC0
6	PB CLOCK CH0 GND	P202-17A	P202-19C	P204-13C	P204-12A	GND
7	PB DATA CH1	P204-16A				+PBDA_1
8	PB DATA CH1	P204-16C				-PBDA_1
9	PB DATA CH1 GND	P204-15A	P204-17C			GND
10	PB CLOCK CH1	P204-18A				+PB_CLK1
11	PB CLOCK CH1	P204-18C				-PB_CLK1
12	PB CLOCK CH1 GND	P204-17A	P204-19C			GND

P221		FROM / TO				
1	AT CH0 A	P201-5A	P203-9A			+AT/CF_A
2	AT CH0 A	P201-5C	P203-9C			-AT/CF_A
3	AT CH0 A GND	P201-4A	P201-6C	P203-8A	P203-10C	GND
4	AT CH0 B	P201-7A	P203-11A			+AT/CF_B
5	AT CH0 B	P201-7C	P203-11C			-AT/CF_B
6	AT CH0 B GND	P201-6A	P201-8C	P203-10A	P203-12C	GND
7	AT CH1 A	P203-5A				+A/C_1A
8	AT CH1 A	P203-5C				-A/C_1A
9	AT CH1 A GND	P203-4A	P203-6C			GND
10	AT CH1 B	P203-7A				+A/C_1B
11	AT CH1 B	P203-7C				-A/C_1B
12	AT CH1 B GND	P203-6A	P203-8C			GND

P222		FROM / TO				
1	+40V (un)					+40V (UN)
2	+24V (un)					+24V (UN)
3	GND (un)					GND (UN)
4	GND (un)					GND (UN)

P224		FROM / TO				
1	E-E CH1	P204-5A				+EE_CH1
2	E-E CH1	P204-5C				-EE_CH1
3	E-E CH1 GND	P204-4A	P204-6C	P202-6A	P202-8C	GND
4	H SW CH1	P201-21B				H_SW1

P226		FROM / TO				
1	+40V (un)					+40V (UN)
2	+40V (un)					+40V (UN)
3	+24V (un)					+24V (UN)
4	GND (un)					GND (UN)
5	GND (un)					GND (UN)
6	-5V (A)					-5V (A)
7	+5V (A)					+5V (A)
8	-12V (A)					-12V (A)
9	+12V (A)					+12V (A)
10	+15V (UN)					+15V (UN)
11	GND (A)					GND
12	+5V (D)					+5V (D)

P227		FROM / TO				
1	+24V (un)					+24V (UN)
2						
3	GND (un)					GND

P228		FROM / TO				
1	TC R/P HEAD H	P205-4C				TC_HEADH
2	TC R/P HEAD C	P205-4B				TC_HEADC
3	TC R/P HEAD GND	P205-4A				TC_HEADG

P229		FROM / TO				
1	SYNC +CH0	P207-9C				SYNC+CH0
2	SYNC -CH0	P207-10C				SYNC-CH0
3	SYNC GND (D)					GND
4	SYNC +CH1	P207-12C				SYNC+CH1
5	SYNC -CH1	P207-13C				SYNC-CH1
6	SYNC GND (D)					GND

P230		FROM / TO				
1	CUE SIG	P206-10C	P230-4			CUE_SIG
2	CUE GND	P206-10B	P230-5			CUE_GND
3	SIG MUTE	P205-26A	P230-6			SIG_MUTE
4	CUE SIG	P206-10C	P230-1			CUE_SIG
5	CUE GND	P206-10B	P230-2			CUE_GND
6	SIG MUTE	P205-26A	P230-3			SIG_MUTE

P231		FROM / TO				
1	CUE LINE SIG H	P206-13C				C_L_S_H
2	CUE LINE SIG C	P206-13B				C_L_S_C
3	CUE LINE SIG GND	P206-13A				C_L_S_G

P232		FROM / TO				
1	TEN GND	P209-7A				TEN_GND
2	TEN VCC	P209-8A				TEN_VCC
3						
4	S TENTION	P209-8B				STENTION

P235		FROM / TO				
1	REC ENV CH0	P210-19B	P201-24A	P208-18C		REC_E_0
2	REC ENV CH0 GND	P210-19C	P201-25A	P208-19C		REC_E_0G
3	REC ENV CH1	P210-22A	P201-24C	P208-20C		REC_E_1
4	REC ENV CH1 GND	P210-23A	P201-25C	P208-21C		REC_E_1G

P236		FROM / TO				
1	DRUM FG	P209-2A				DRUM_FG
2	DRUM FG GND	P209-2B				DRUM_FGG
3	DRUM PG +	P209-2C				DRUM_PG+
4	DRUM PG -	P209-3A				DRUM_PG-
5	V FG	P209-3B				V_FG
6	FG 1	P209-4A				FG_1
7	V FG GND	P209-3C				V_FG_G
8	FG 2	P209-4B				FG_2
9	FV VCC	P209-19A				FV_VCC
10	TFG 1	P209-5A				TFG_1
11	TFG 2	P209-5B				TFG_2
12	TFG GND	P209-19C				TFG_GND
13	SFG 1	P209-5C				SFG_1
14	SFG 2	P209-6A				SFG_2
15	SFG GND	P209-19B				SFG_GND

P237		FROM / TO				
1	CTL HEAD +	P209-9A				CTLHEAD+
2	AG (CTL_S)	P209-7B				AG(C_S)
3	CTL HEAD -	P209-9B				CTLHEAD-

P238		FROM / TO				
1	T/C IN GND	P212-2C				T/C_IN_G
2	T/C IN +	P212-2A				T/C_IN+
3	T/C IN -	P212-2B				T/C_IN-
4	T/C OUT GND	P212-3C				T/C_O_G
5	T/C OUT +	P212-3A				T/C_OUT+
6	T/C OUT -	P212-3B				T/C_OUT-

P240		FROM / TO				
1	REC CURR CH0	P214-22A	P202-22B			R_C_C_0
2	REC CURR CH1	P214-23A	P202-21B			R_C_C_1
3	GND (A)					GND

P246		FROM / TO				
1	F-SER A DATA +	P214-2A				FS_A_DA+
2	F-SER A DATA -	P214-3A				FS_A_DA-
3	F-SER A EN +	P214-4A				FS_A_EN+
4	F-SER A EN -	P214-5A				FS_A_EN-
5	F-SER B DATA +	P214-2B				FS_B_DA+
6	F-SER B DATA -	P214-3B				FS_B_DA-
7	F-SER B EN +	P214-4B				FS_B_EN+
8	F-SER B EN -	P214-5B				FS_B_EN-
9	F-SER STB +	P214-2C				FS_STB+
10	F-SER STB -	P214-3C				FS_STB-
11	F-SER CLK +	P214-4C				FS_CLK+
12	F-SER CLK	P214-5C				FS_CLK-

1 2 3 4 5 6 7

D

P247	
1	EJECT KEY
2	EJECT LAMP
3	GND (D)
4	AUTO OFF LAMP
5	+5V (D)

P248	
1	-5V (D)
2	+5V (D)
3	GND (D)

C

P249	
1	REC INPUT VIDEO
2	REC INPUT VIDEO GND
3	RF WFM
4	RF WFM GND
5	WF CTL
6	WF CTL GND
7	4FSC CLK
8	4FSC CLK GND

P253	
1	-15V (un)
2	-8V (un)
3	GND (A)
4	GND (A)
5	+8V (un)
6	+15V (un)
7	+12V (A)
8	-12V (A)
9	+5V (A)
10	-5V (A)

B

P255	
1	+12V (A)
2	-12V (A)
3	+5V (A)
4	GND (A)

P290	
1	STRN_A
2	STRN_G
3	STRN_B
4	HV_MONI
5	HV_ON
6	PAT_A
7	PAT_A_G
8	PAT_B
9	PAT_B_G

A

1

OTHER SCHEMATIC DIAGRAM (14/14)

P247		FROM / TO				
1	EJECT KEY	P214-18C				EJE_KEY
2	EJECT LAMP	P214-19C				EJE_LAMP
3	GND (D)					GND
4	AUTO OFF LAMP	P214-19B				A_O_LAMP
5	+5V (D)					+5V (D)

P248		FROM / TO				
1	-5V (D)	P035-1				-5V (D)
2	+5V (D)	P035-2				+5V (D)
3	GND (D)	P235-3				GND

P249		FROM / TO				
1	REC INPUT VIDEO	P218-21C				R_IN_V
2	REC INPUT VIDEO GND	P218-21B				R_IN_V_G
3	RF WFM	P204-1C	P202-1C			RF_WFM
4	RF WFM GND	P204-1A	P204-1B	P202-1A	P202-1B	RF_WFM_G
5	WF CTL	P210-14B				WF_CTL
6	WF CTL GND	P210-15B				WF_CTL_G
7	4FSC CLK	P212-16A				4FSC_CLK
8	4FSC CLK GND					GND

P253		FROM/TO				
1	-15V (un)					-15V (UN)
2	-8V (un)					-8V (UN)
3	GND (A)					GND
4	GND (A)					GND
5	+8V (un)					+8V (UN)
6	+15V (un)					+15V (UN)
7	+12V (A)					+12V (A)
8	-12V (A)					-12V (A)
9	+5V (A)					+5V (A)
10	-5V (A)					-5V (A)

P255		FROM / TO				
1	+12V (A)					+12V (A)
2	-12V (A)					-12V (A)
3	+5V (A)					+5V (A)
4	GND (A)					GND

P290		FROM / TO				
1	STRN_A	P207-19C				STRN_A
2	STRN_G	P207-19B				STRN_G
3	STRN_B	P207-19A				STRN_B
4	HV_MONI	P207-20C				HV_MONI
5	HV_ON	P207-21C				HV_ON
6	PAT_A	P207-20B				PAT_A
7	PAT_A_G	P207-20A				PAT_A_G
8	PAT_B	P207-21B				PAT_B
9	PAT_B_G	P207-21A				PAT_B_G

P256		FROM / TO				
1	SER H SW	P210-18A	P214-19A	P201-23B		SER_H_SW
2	SER H SW GND	P201-24B	P210-18B			SERHSW_G
3	TEST MODE	P214-21B	P202-24A			TESTMODE
4	REC MODE	P214-20A	P202-22A			REC_MODE

P257		FROM / TO				
1	+24V (un)					+24V (UN)
2						
3	GND (un)					GND (UN)

P258		FROM / TO				
1	+12V (A)					+12V (A)
2	-12V (A)					-12V (A)
3	GND (A)					GND

P259		FROM / TO				
1	GND (A)					GND
2	+12V (A)					+12V (A)
3	-12V (A)					-12V (A)
4	GND (A)					GND
5	+8V (un)					+8V (UN)
6	-8V (un)					-8V (UN)
7	+15V (un)					+15V (UN)
8	-15V (un)					-15V (UN)

P260		FROM / TO					
1	SYS AB 0	P213-9B	P241-4A	P211-9B			SYS_AB_0
2	SYS AB 1	P213-10B	P241-5A	P211-10B			SYS_AB_1
3	SYS AB 2	P213-11B	P241-6A	P211-11B			SYS_AB_2
4	SYS AB 3	P213-12B	P241-7A	P211-12B			SYS_AB_3
5	SYS AB 4	P213-13B	P241-8A	P211-13B			SYS_AB_4
6	SYS AB 5	P213-14B	P241-9A	P211-14B			SYS_AB_5
7	SYS AB 6	P213-15B	P241-10A	P211-15B			SYS_AB_6
8	SYS AB 7	P213-16B	P241-11A	P211-16B			SYS_AB_7
9	SYS RESET	P213-9C	P241-12B	P211-9C	P233-10A	P205-9C	SYS_RST
10	SYS IORD	P213-10C	P241-12A	P211-10C			SYS_IORD
11	SYS IOWR	P213-11C	P241-13A	P211-11C			SYS_IOWR

P261		FROM / TO				
1	SYS DB 0	P213-9A	P241-4B	P211-9A		SYS_DB_0
2	SYS DB 1	P213-10A	P241-5B	P211-10A		SYS_DB_1
3	SYS DB 2	P213-11A	P241-6B	P211-11A		SYS_DB_2
4	SYS DB 3	P213-12A	P241-7B	P211-12A		SYS_DB_3
5	SYS DB 4	P213-13A	P241-8B	P211-13A		SYS_DB_4
6	SYS DB 5	P213-14A	P241-9B	P211-14A		SYS_DB_5
7	SYS DB 6	P213-15A	P241-10B	P211-15A		SYS_DB_6
8	SYS DB 7	P213-16A	P241-11B	P211-16A		SYS_DB_7

P268		FROM / TO				
1	DIF CK	P216-2C				DIF_CK
2	DIF CK	P216-3C				-DIF_CK
3	DIF CK GND					GND
4	DBCK	P216-4A				DBCK
5	DBCK	P216-4B				-DBCK
6	DB CK GND					GND

P269		FROM / TO				
1	DAI 1A	P216-18A				DAI_1A
2	DAI 1B	P216-18B				DAI_1B
3	DAI 1 GND	P216-18C				DAI_1_G
4	DAI 2A	P216-19A				DAI_2A
5	DAI 2B	P216-19B				DAI_2B
6	DAI 2 GND	P216-19C				DAI_2_G
7	DAO 1A	P216-20A				DAO_1A
8	DAO 1B	P216-20B				DAO_1B
9	DAO 1 GND	P216-20C				DAO_1_G
10	DAO 2A	P216-21A				DAO_2A
11	DAO 2B	P216-21B				DAO_2B
12	DAO 2 GND	P216-21C				DAO_2_G

P270		FROM / TO				
1	VA CNT 1A	P216-22A				VACNT1A
2	VA CNT 1B	P216-22B				VACNT1B
3	VA CNT 1 GND	P216-22C				VACNT1G
4	VA CNT 2A	P216-23A				VACNT2A
5	VA CNT 2B	P216-23B				VACNT2B
6	VA CNT 2 GND	P216-23C				VACNT2G

P272		FROM / TO				
1	+15V (A)					+15V (UN)
2	-15V (A)					-15V (UN)
3	+12V (A)					+12V (A)
4	-12V (A)					-12V (A)
5	+5V (A)					+5V (A)
6	-5V (A)					-5V (A)
7	GND (A)					GND

P277		FROM / TO				
1	-5V (A)					-5V (A)
2	+5V (A)					+5V (A)
3	GND (A)					GND

P278		FROM / TO				
1	+15V (un)					+15V (UN)
2						
3	GND (un)					GND

P502		FROM / TO				
1	REC DATA CH0	P201-13A				+REC_DA0
2	REC DATA CH0	P201-13C				-REC_DA0
3	REC DATA CH0 GND	P201-14A	P201-12C			GND
4	REC DATA CH1	P201-15A				+REC_DA1
5	REC DATA CH1	P201-15C				-REC_DA1
6	REC DATA CH1 GND	P201-16A	P201-14C			GND
7	REC CLK	P201-17A				+REC_CLK
8	REC CLK	P201-17C				-REC_CLK
9	REC CLK GND	P201-18A	P201-16C			GND
10	FRY ERASE	P201-20C				FRYERASE
11	TEST EE2	P201-20A	P245-2B	P203-20A		TEST_EE2

P503		FROM / TO				
1	CH0 REC	P201-19C				CH0_REC
2						
3	CH1 REC	P201-19A				CH1_REC

INTERCONNECTION SCHEMATIC DIAGRAM (1/5)

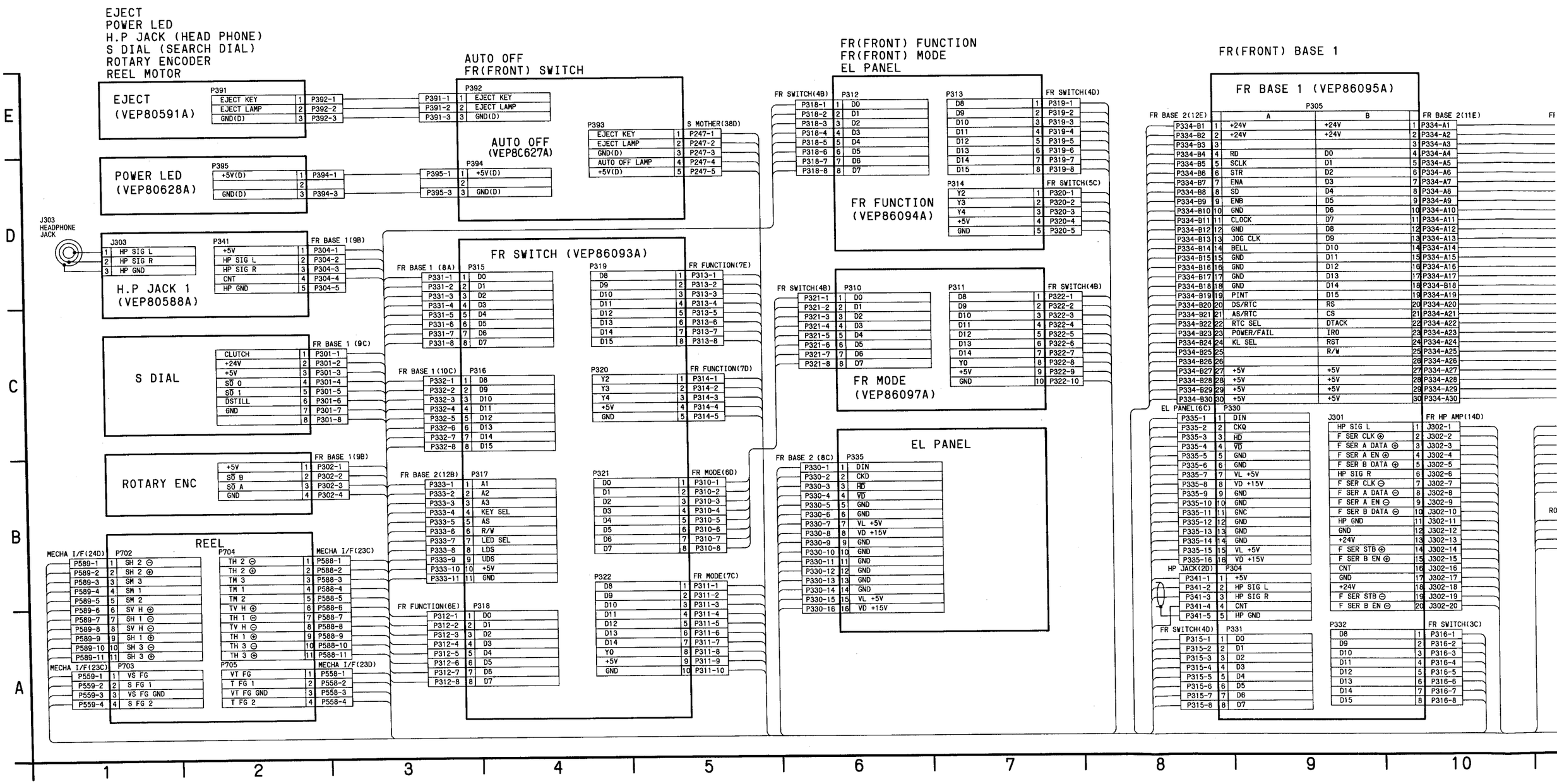

FR(FRONT) BASE 2

FR H.P(FRONT HEADPHONE) AMP
TENSION I/F(INTER FACE)
CAPSTAN MOTOR

CHASSIS

CASSETTE
CARRIAGE

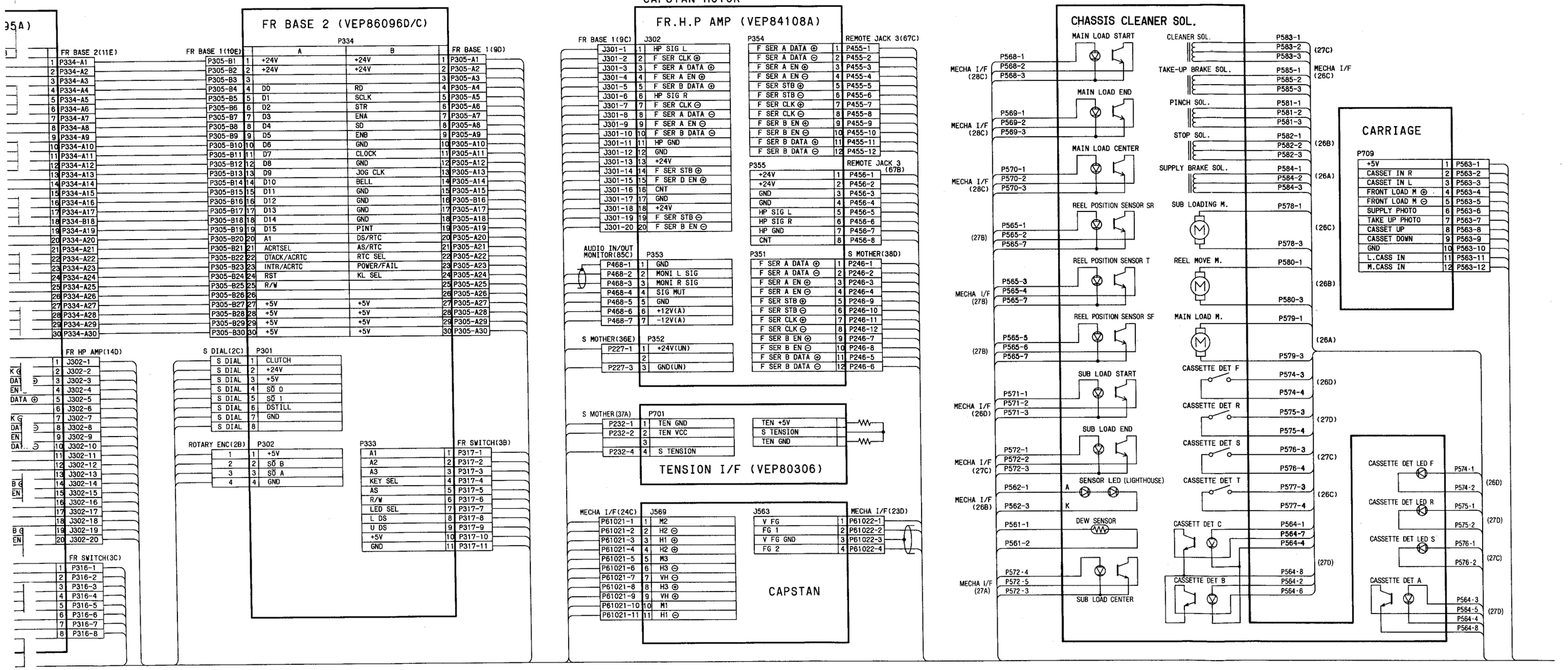

INTERCONNECTION SCHEMATIC DIAGRAM (2/5)

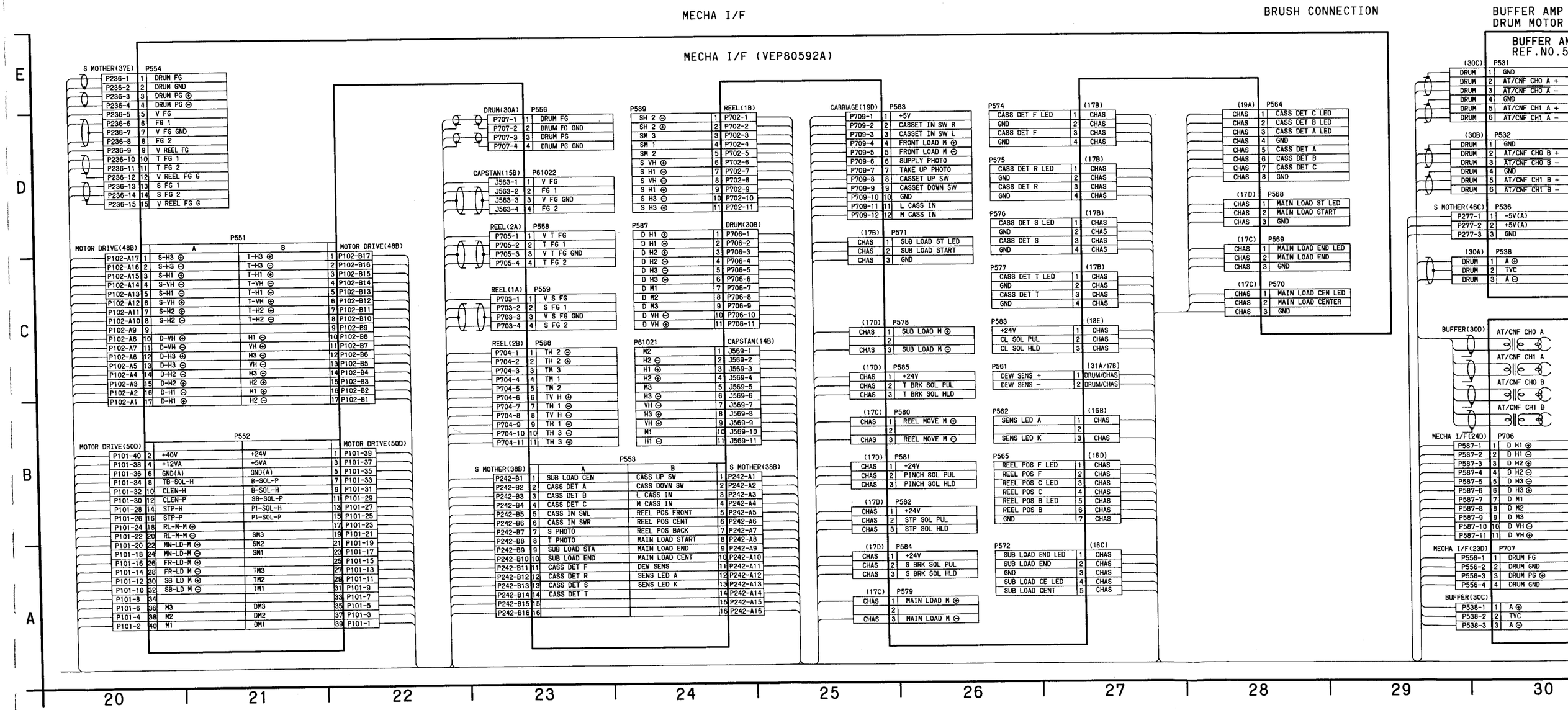

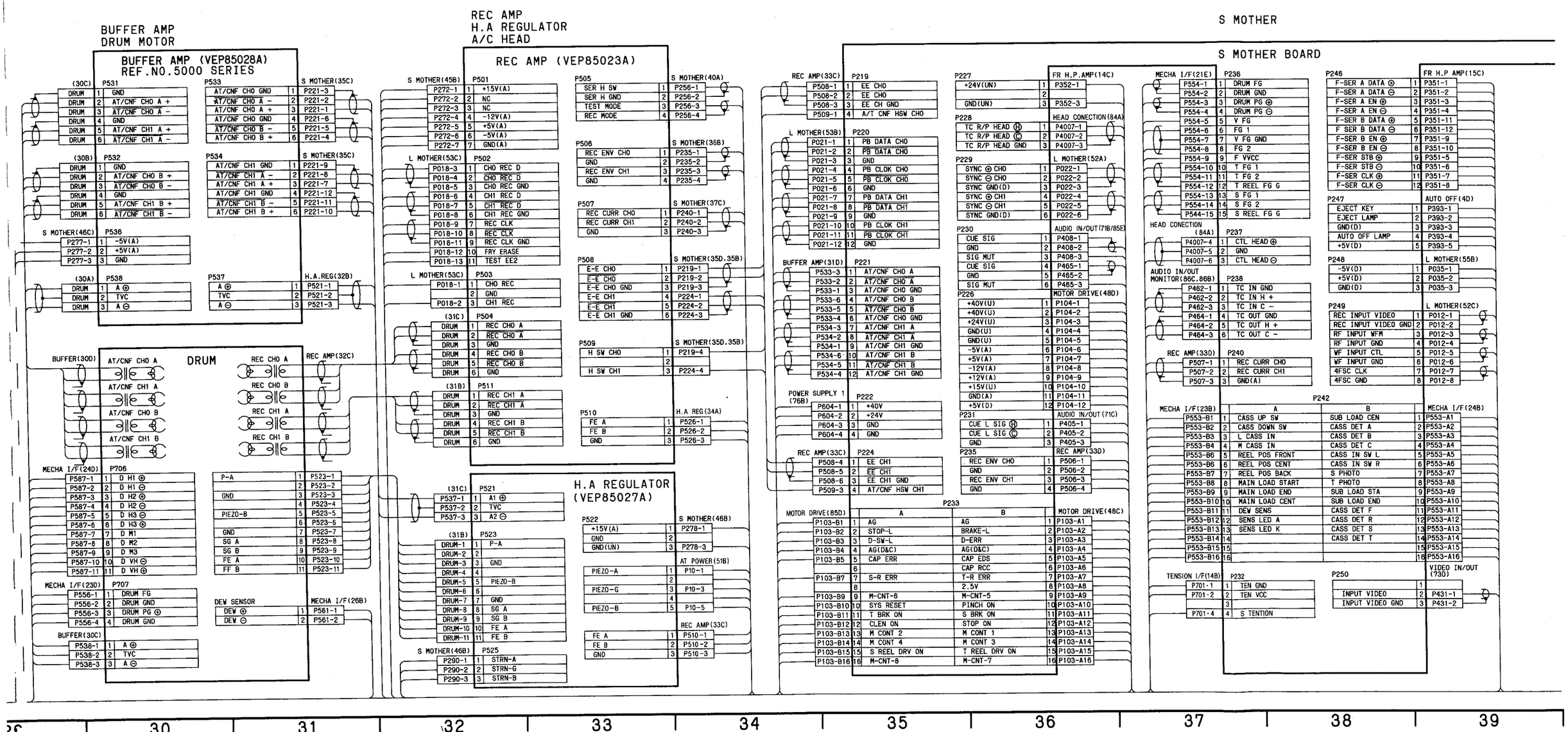
BUFFER AMP
DRUM MOTOR
BUFFER AMP (VEP85028A)
REF.NO.5000 SERIES
REC AMP
H.A REGULATOR
A/C HEAD
REC AMP (VEP85023A)
S MOTHER
S MOTHER BOARD
DRUM
H.A REGULATOR
(VEP85027A)
30
31
32
33
34
35
36
37
38
39

INTERCONNECTION SCHEMATIC DIAGRAM (3/5)

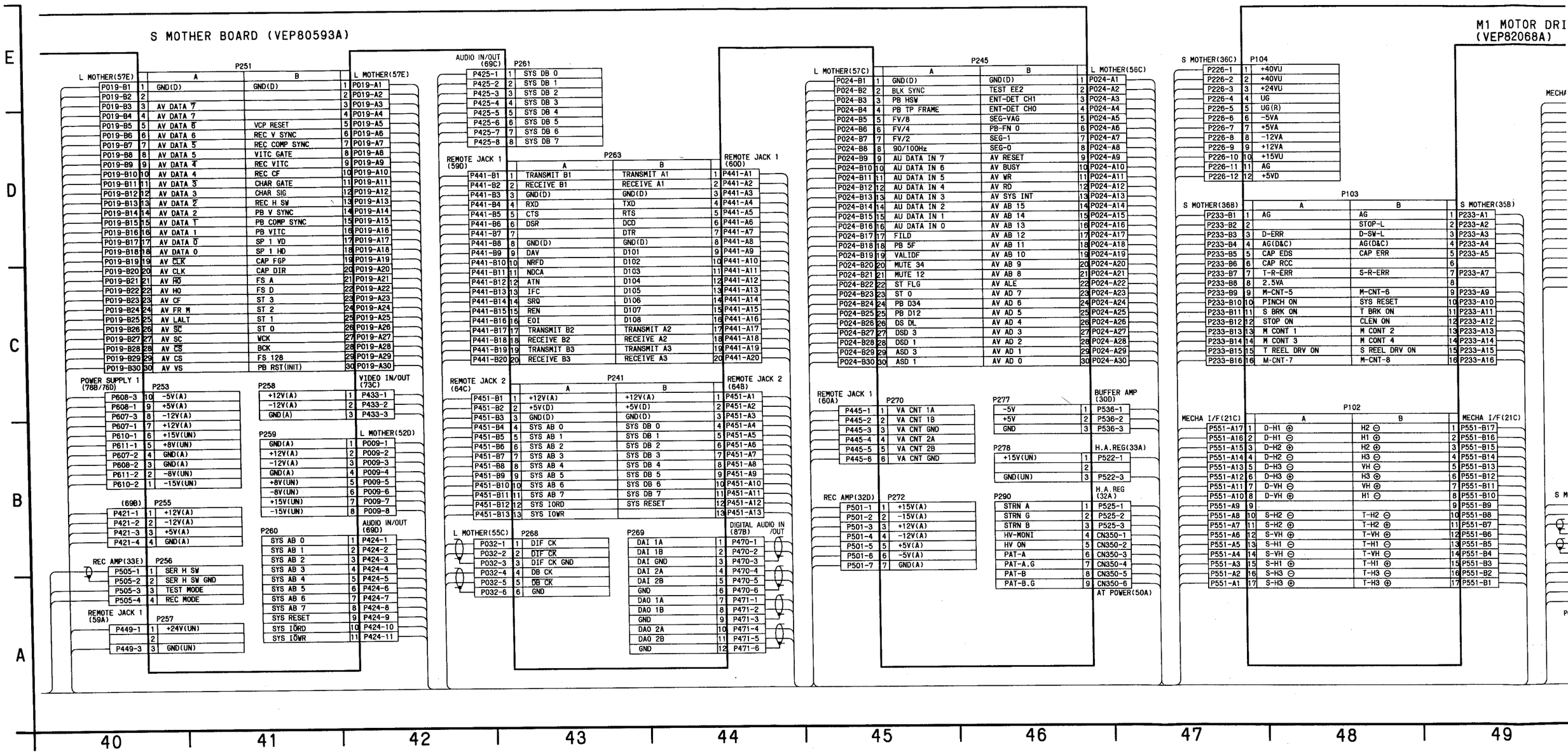

MOTOR DRIVE AT POWER

M1 MOTOR DRIVE (REF.NO.2000 SERIES) (VEP82068A)

P101

MECHA I/F(21B)					MECHA I/F(21B)
P552-39	1	DM1	M1	2	P552-40
P552-37	3	DM2	M2	4	P552-38
P552-35	5	DM3	M3	6	P552-36
P552-33	7			8	P552-34
P552-31	9	TM1	SB-LD-M ⊖	10	P552-32
P552-29	11	TM2	SB-LD-M ⊕	12	P552-30
P552-27	13	TM3	FR-LD-M ⊖	14	P552-28
P552-25	15		FR-LD-M ⊕	16	P552-26
P552-23	17	SM1	MN-LD-M ⊖	18	P552-24
P552-21	19	SM2	MN-LD-M ⊕	20	P552-22
P552-19	21	SM3	RL-M-M ⊖	22	P552-20
P552-17	23		RL-M-M ⊕	24	P552-18
P552-15	25	PI-SOL-P	STP-P	26	P552-16
P552-13	27	PI-SOL-H	STP-H	28	P552-14
P552-11	29	SB-SOL-P	CLEN-P	30	P552-12
P552-9	31	SB-SOL-H	CLEN-H	32	P552-10
P552-7	33	TB-SOL-P	TB-SOL-H	34	P552-8
P552-5	35	AG	AG	36	P552-6
P552-3	37	+5VA	+12VA	38	P552-4
P552-1	39	+24V	+40V	40	P552-2

B — S MOTHER(35B)

1	P233-A1	
2	P233-A2	
3	P233-A3	
4	P233-A4	
5	P233-A5	
6		
7	P233-A7	
8		
9	P233-A9	
10	P233-A10	
11	P233-A11	
12	P233-A12	
13	P233-A13	
14	P233-A14	
15	P233-A15	
16	P233-A16	

B — MECHA I/F(21C)

1	P551-B17
2	P551-B16
3	P551-B15
4	P551-B14
5	P551-B13
6	P551-B12
7	P551-B11
8	P551-B10
9	P551-B9
10	P551-B8
11	P551-B7
12	P551-B6
13	P551-B5
14	P551-B4
15	P551-B3
16	P551-B2
17	P551-B1

AT POWER (VEP82062B)

S MOTHER(46B) — CN350

P290-4	1	HV-MONI
P290-5	2	HV-ON
P290-6	3	PAT-A
P290-7	4	PAT-A-G
P290-8	5	PAT-B
P290-9	6	PAT-B-G
P609-1	7	+15V
P609-5	8	-12V
P609-2	9	+12V
P609-3	10	GND
P609-4	11	GND

POWER SUPPLY (78B)

P10 — H.A.REG (34A)

PIEZO-CHA	1	P708-1	
	2		
GND	3	P708-3	
	4		
PIEZO-CAB	5	P708-5	

L MOTHER

L MOTHER BOARD (VEP80586A)

S MOTHER(42B) — P009

P259-1	1	GND(A)
P259-2	2	+12V(A)
P259-3	3	-12V(A)
P259-4	4	GND(A)
P259-5	5	+8V(UN)
P259-6	6	-8V(UN)
P259-7	7	+15V(UN)
P259-8	8	-15V(UN)

AUDIO IN/OUT (71C/85E) — P010

P406-1	1	CH1 LINE OUT
P406-2	2	CH1 LINE GND
P406-3	3	CH2 LINE OUT
P406-4	4	CH2 LINE GND
P407-1	5	CH3 LINE OUT
P407-2	6	CH3 LINE GND
P407-3	7	CH4 LINE OUT
P407-4	8	CH4 LINE GND
P465-4	9	MONI L OUT
P465-5	10	MONI L GND
P465-6	11	MONI R OUT
P465-7	12	MONI R GND

S MOTHER(38C) — P012

P249-1	1	REC INPUT VIDEO
P249-2	2	REC INPUT GND
P249-3	3	RF WFM
P249-4	4	RF WFM GND
P249-5	5	WF CTL
P249-6	6	WF CTL GND
P249-7	7	4FSC CLK
P249-8	8	4FSC CLK GND

VIDEO IN/OUT(73D) — P014

P431-5	1	VIDEO 1 OUT
P431-6	2	VIDEO 1 GND
P431-7	3	VIDEO 2 OUT
P431-8	4	VIDEO 2 GND
P431-9	5	VIDEO 3 OUT
P431-10	6	VIDEO 3 GND
P431-3	7	WFM OUT
P431-4	8	WFM GND

(71D) — P015

P401-1	1	CH1 LINE IN(H)
P401-2	2	CH1 LINE IN(C)
P401-3	3	CH1 LINE GND
P402-1	4	CH2 LINE IN(H)
P402-2	5	CH2 LINE IN(C)
P402-3	6	CH2 LINE GND
P403-1	7	CH3 LINE IN(H)
P403-2	8	CH3 LINE IN(C)
P403-3	9	CH3 LINE GND
P404-1	10	CH4 LINE IN(H)
P404-2	11	CH4 LINE IN(C)
P404-3	12	CH4 LINE GND

S MOTHER(36B) — P022

P229-1	1	SYNC +CH0
P229-2	2	SYNC -CH0
P229-3	3	SYNC GND(D)
P229-4	4	SYNC +CH1
P229-5	5	SYNC -CH1
P229-6	6	SYNC GND(D)

P017

DV DATA IN 7	1	P442-1
DV DATA IN 6	2	P442-2
DV DATA IN 5	3	P442-3
DV DATA IN 4	4	P442-4
DV DATA IN 3	5	P442-5
DV DATA IN 2	6	P442-6
DV DATA IN 1	7	P442-7
DV DATA IN 0	8	P442-8
DV DATA IN ⊖1	9	P442-9
DV DATA IN ⊖2	10	P442-10
DV CLK I	11	P442-11
$\overline{\text{DV CLK I}}$	12	P442-12
+5V(D)	13	P442-13
GND(D)	14	P442-14
-5V(D)	15	P442-15

REMOTE JACK 1 (62B)

P018 — REC AMP(32C)

CH0 REC	1	P503-1
CH1 REC	2	P503-3
CH0 REC D	3	P502-1
$\overline{\text{CH0 REC D}}$	4	P502-2
$\overline{\text{CH0 REC GND}}$	5	P502-3
CH1 REC D	6	P502-4
$\overline{\text{CH1 REC D}}$	7	P502-5
CH1 REC GND	8	P502-6
REC CLK	9	P502-7
$\overline{\text{REC CLK}}$	10	P502-8
REC CLK GND	11	P502-9
FRY ERASE	12	P502-10
TEST EE2	13	P502-11

P021 — S MOTHER(35D)

PB DATA CH0	1	P220-1
$\overline{\text{PB DATA CH0}}$	2	P220-2
GND	3	P220-3
PB CLOCK CH0	4	P220-4
$\overline{\text{PB CLOCK CH0}}$	5	P220-5
GND	6	P220-6
PB DATA CH1	7	P220-7
$\overline{\text{PB DATA CH1}}$	8	P220-8
GND	9	P220-9
PB CLOCK CH1	10	P220-10
$\overline{\text{PB CLOCK CH1}}$	11	P220-11
GND	12	P220-12

P027 — REMOTE JACK 1 (60C)

DV DATA OUT 7	1	P443-1
$\overline{\text{DV DATA OUT 7}}$	2	P443-2
DV DATA OUT 6	3	P443-3
$\overline{\text{DV DATA OUT 6}}$	4	P443-4
DV DATA OUT 5	5	P443-5
$\overline{\text{DV DATA OUT 5}}$	6	P443-6
DV DATA OUT 4	7	P443-7
$\overline{\text{DV DATA OUT 4}}$	8	P443-8
DV DATA OUT 3	9	P443-9
$\overline{\text{DV DATA OUT 3}}$	10	P443-10

REMOTE JACK 1 (60B) — P028

P444-1	1	DV DATA OUT 2
P444-2	2	$\overline{\text{DV DATA OUT 2}}$
P444-3	3	DV DATA OUT 1
P444-4	4	$\overline{\text{DV DATA OUT 1}}$
P444-5	5	DV DATA OUT 0
P444-6	6	$\overline{\text{DV DATA OUT 0}}$
P444-7	7	DV DATA OUT -1
P444-8	8	$\overline{\text{DV DATA OUT -1}}$
P444-9	9	DV DATA OUT -2
P444-10	10	$\overline{\text{DV DATA OUT -2}}$
P444-11	11	DV CLK 0
P444-12	12	$\overline{\text{DV CLK 0}}$

VIDEO IN/OUT(73D) — P029

P432-1	1	REF VIDEO IN
P432-2	2	REF VIDEO GND
P432-3	3	BLACK BURST
P432-4	4	BLACK GND
P432-5	5	EXT CF IN
P432-6	6	EXT CF GND
P432-7	7	CF PULSE OUT
P432-8	8	CF PULSE GND

S MOTHER(43B) — P032

P268-1	1	DIF CK
P268-2	2	$\overline{\text{DIF CK}}$
P268-3	3	GND
P268-4	4	DB CK
P268-5	5	$\overline{\text{DB CK}}$
P268-6	6	GND

POWER SUPPLY 2 (76E) — P034

P612-1	1	-5V(D)
P612-2	2	GND(D)
P612-3	3	+5V(D)
P612-4	4	+5V(D)
P612-5	5	+5V(D)
P612-6	6	+5V(D)
P612-7	7	GND(D)
P612-8	8	GND(D)
P612-9	9	GND(D)
P612-10	10	GND(D)

S MOTHER(39C) — P035

P248-1	1	-5V(D)
P248-2	2	+5V(D)
P248-3	3	GND(D)

REMOTE JACK 1 (60B) — P036

P445-8	1	TXD
P445-7	2	$\overline{\text{TXD}}$
P445-10	3	RXD
P445-9	4	$\overline{\text{RXD}}$
P445-11	5	GND(D)

VIDEO IN/OUT (73C) — P026

P434-1	1	SYNC OUT
P434-2	2	GND(A)
P434-3	3	SC OUT
P434-4	4	GND(A)

P019

S MOTHER(41E)		A	B		S MOTHER(41E)
P251-B1	1	GND(D)	GND(D)	1	P251-A1
P251-B2	2			2	P251-A2
P251-B3	3		AV DATA $\overline{7}$	3	P251-A3
P251-B4	4		AV DATA 7	4	P251-A4
P251-B5	5	VCP RESET	AV DATA $\overline{6}$	5	P251-A5
P251-B6	6	REC V SYNC	AV DATA 6	6	P251-A6
P251-B7	7	REC COMP SYNC	AV DATA $\overline{5}$	7	P251-A7
P251-B8	8	VITC GATE	AV DATA 5	8	P251-A8
P251-B9	9	REC VITC	AV DATA $\overline{4}$	9	P251-A9
P251-B10	10	REC CF	AV DATA 4	10	P251-A10
P251-B11	11	CHAR GATE	AV DATA $\overline{3}$	11	P251-A11
P251-B12	12	CHAR SIG	AV DATA 3	12	P251-A12
P251-B13	13	REC H SW	AV DATA $\overline{2}$	13	P251-A13
P251-B14	14	PB V SYNC	AV DATA 2	14	P251-A14
P251-B15	15	PB COMP SYNC	AV DATA $\overline{1}$	15	P251-A15
P251-B16	16	PB VITC	AV DATA 1	16	P251-A16
P251-B17	17	SP 1 VD	$\overline{\text{AV DATA 0}}$	17	P251-A17
P251-B18	18	SP 1 HD	AV DATA 0	18	P251-A18
P251-B19	19	CAP FG1	$\overline{\text{AV CLK I}}$	19	P251-A19
P251-B20	20	CAP DIR	AV CLK I	20	P251-A20
P251-B21	21	FS A	$\overline{\text{AV H0}}$	21	P251-A21
P251-B22	22	FS D	AV H0	22	P251-A22
P251-B23	23	ST 3	AV CF	23	P251-A23
P251-B24	24	ST 2	AV FR M	24	P251-A24
P251-B25	25	ST 1	AV LALT	25	P251-A25
P251-B26	26	ST 0	$\overline{\text{AV SC}}$	26	P251-A26
P251-B27	27	W CK	AV SC	27	P251-A27
P251-B28	28	B CK	$\overline{\text{AV CS}}$	28	P251-A28
P251-B29	29	FS 128	AV CS	29	P251-A29
P251-B30	30	PB RST(INIT)	AV VS	30	P251-A30

P024

S MOTHER(46E)		A	B		S MOTHER(45E)
P245-B1	1	GND(D)	GND(D)	1	P245-A1
P245-B2	2	TEST EE2	BLK SYNC	2	P245-A2
P245-B3	3	ENV-DET CH1	PB H SW	3	P245-A3
P245-B4	4	ENV-DET CH0	PB TP FRAME	4	P245-A4
P245-B5	5	SEG-VAG	FV/8	5	P245-A5
P245-B6	6	PB-FN0	FV/4	6	P245-A6
P245-B7	7	SEG-1	FV/2	7	P245-A7
P245-B8	8	SEG-0	90/100Hz	8	P245-A8
P245-B9	9	AV RESET	AU DATA IN 7	9	P245-A9
P245-B10	10	AV BUSY	AU DATA IN 6	10	P245-A10
P245-B11	11	AV WR	AU DATA IN 5	11	P245-A11
P245-B12	12	AV RD	AU DATA IN 4	12	P245-A12
P245-B13	13	AV SYS INT	AU DATA IN 3	13	P245-A13
P245-B14	14	AV AB 15	AU DATA IN 2	14	P245-A14
P245-B15	15	AV AB 14	AU DATA IN 1	15	P245-A15
P245-A16	16	AV AB 13	AU DATA IN 0	16	P245-A16
P245-B17	17	AV AB 12	FILD	17	P245-A17
P245-B18	18	AV AB 11	PB 5F	18	P245-A18
P245-B19	19	AV AB 10	VALI DF	19	P245-A19
P245-B20	20	AV AB 9	MUTE 34	20	P245-A20
P245-B21	21	AV AB 8	MUTE 12	21	P245-A21
P245-B22	22	AV ALE	ST FLG	22	P245-A22
P245-B23	23	AV AD 7	ST 0	23	P245-A23
P245-B24	24	AV AD 6	PB D34	24	P245-A24
P245-B25	25	AV AD 5	PB D12	25	P245-A25
P245-B26	26	AV AD 4	DS DL	26	P245-A26
P245-B27	27	AV AD 3	DSD 3	27	P245-A27
P245-B28	28	AV AD 2	DSD 1	28	P245-A28
P245-B29	29	AV AD 1	ASD 3	29	P245-A29
P245-B30	30	AV AD 0	ASD 1	30	P245-A30

49 50 51 52 53 54 55 56 57 58

INTERCONNECTION SCHEMATIC DIAGRAM (4/5)

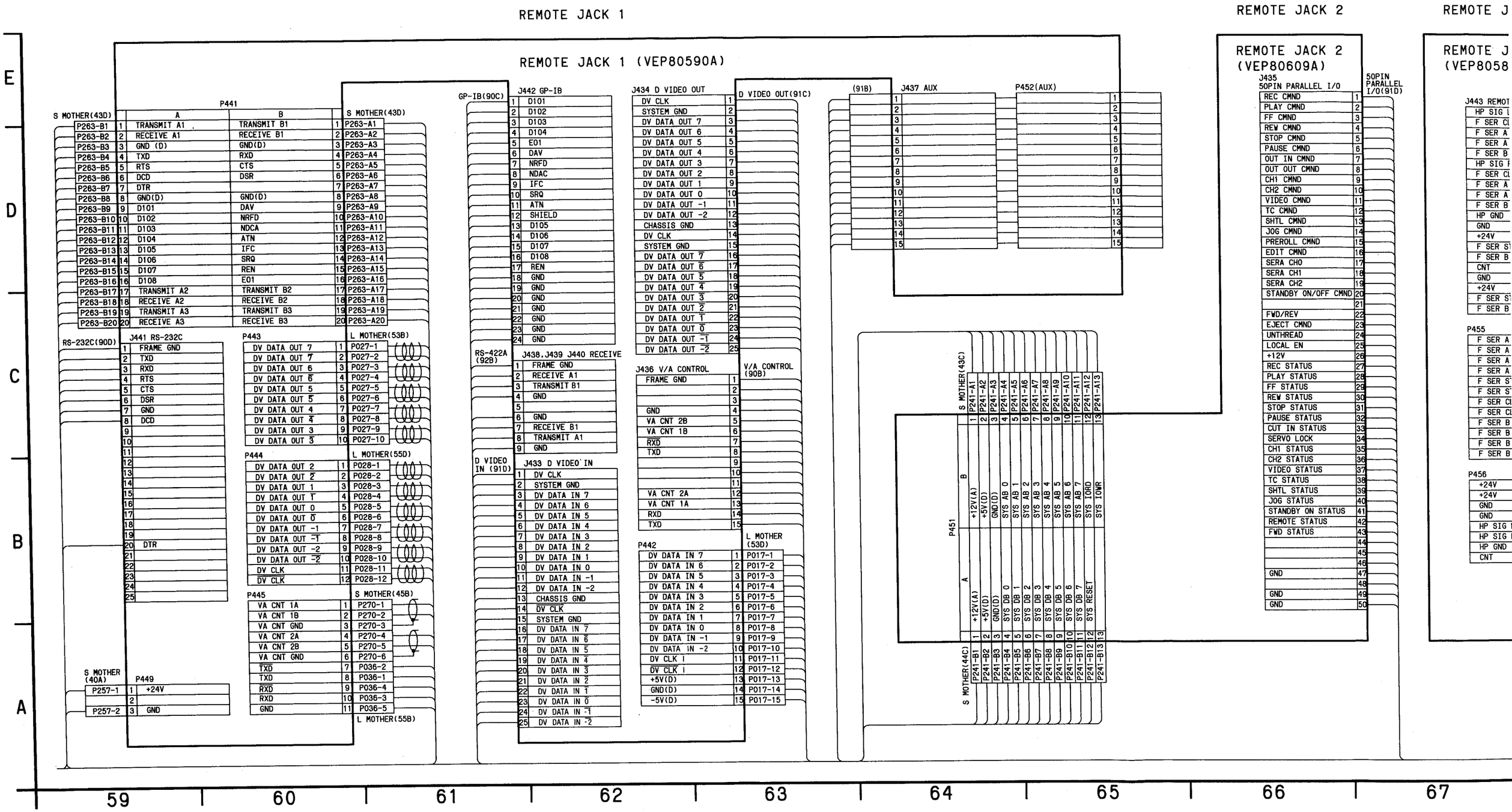

REMOTE JACK 3

REMOTE JACK 3 (VEP80589A)

J443 REMOTE — REMOTE(90B)

HP SIG L	1	
F SER CLK ⊕	2	
F SER A DATA ⊕	3	
F SER A EN ⊕	4	
F SER B DATA ⊕	5	
HP SIG R	6	
F SER CLK ⊖	7	
F SER A DATA ⊖	8	
F SER A EN ⊖	9	
F SER B DATA ⊖	10	
HP GND	11	
GND	12	
+24V	13	
F SER STB ⊕	14	
F SER B EN ⊕	15	
CNT	16	
GND	17	
+24V	18	
F SER STB ⊖	19	
F SER B EN ⊖	20	

P455 — FR.H.P AMP (15D)

F SER A DATA ⊕	1	P354-1
F SER A DATA ⊖	2	P354-2
F SER A EN ⊕	3	P354-3
F SER A EN ⊖	4	P354-4
F SER STB ⊕	5	P354-5
F SER STB ⊖	6	P354-6
F SER CLK ⊕	7	P354-7
F SER CLK ⊖	8	P354-8
F SER B EN ⊕	9	P354-9
F SER B EN ⊖	10	P354-10
F SER B DATA ⊕	11	P354-11
F SER B DATA ⊖	12	P354-12

P456 — FR.H.P AMP (15D)

+24V	1	P355-1
+24V	2	P355-2
GND	3	P355-3
GND	4	P355-4
HP SIG L	5	P355-5
HP SIG R	6	P355-6
HP GND	7	P355-7
CNT	8	P355-8

50PIN PARALLEL I/O(91D)

AUDIO IN/OUT

AUDIO IN/OUT(VEP84110A/B)

P424 — S MOTHER(41B)

SYS AB 0	1	P260-1
SYS AB 1	2	P260-2
SYS AB 2	3	P260-3
SYS AB 3	4	P260-4
SYS AB 4	5	P260-5
SYS AB 5	6	P260-6
SYS AB 6	7	P260-7
SYS AB 7	8	P260-8
SYS RESET	9	P260-9
SYS IORD	10	P260-10
SYS IOWR	11	P260-11

P425 — S MOTHER(43D)

SYS DB 0	1	P261-1
SYS DB 1	2	P261-2
SYS DB 2	3	P261-3
SYS DB 3	4	P261-4
SYS DB 4	5	P261-5
SYS DB 5	6	P261-6
SYS DB 6	7	P261-7
SYS DB 7	8	P261-8

P423 — AUDIO IN/OUT MONITOR(85D)

MOL PCM L	1	P466-1
MOR PCM L	2	P466-2
MONI LR +8	3	P466-3
MONI LR +4	4	P466-4

P421 — S MOTHER(40B)

+12V(A)	1	P255-1
-12V(A)	2	P255-2
+5V	3	P255-3
GND	4	P255-4

P422 — AUDIO IN/OUT MONITOR(85C)

+12V(A)	1	P469-1
-12V(A)	2	P469-2
+5V	3	P469-3
GND	4	P469-4

L MOTHER(52B) — P401

P015-1	1	CH1 L IN (H)
P015-2	2	CH1 L IN (C)
P015-3	3	CH1 L IN GND

L MOTHER(52B) — P402

P015-4	1	CH2 L IN (H)
P015-5	2	CH2 L IN (C)
P015-6	3	CH2 L IN GND

L MOTHER(52B) — P403

P015-7	1	CH3 L IN (H)
P015-8	2	CH3 L IN (C)
P015-9	3	CH3 L IN GND

L MOTHER(52B) — P404

P015-10	1	CH4 L IN (H)
P015-11	2	CH4 L IN (C)
P015-12	3	CH4 L IN GND

S MOTHER(36A) — P405

P231-1	1	CUE L IN (H)
P231-2	2	CUE L IN (C)
P231-3	3	CUE L IN GND

L MOTHER(52D) — P406

P010-1	1	CH1 L OUT
P010-2	2	CH1 L OUT GND
P010-3	3	CH2 L OUT
P010-4	4	CH2 L OUT GND

L MOTHER(52D) — P407

P010-5	1	CH3 L OUT
P010-6	2	CH3 L OUT GND
P010-7	3	CH4 L OUT
P010-8	4	CH4 L OUT GND

S MOTHER(36C) — P408

P230-1	1	CUE SIG
P230-2	2	GND
P230-3	3	SIG MUT

AUDIO IN/OUT MONITOR(85C) — P419

P467-1	1	+18V
P467-2	2	GND
P467-3	3	-18V

POWER SUPPLY 1 (77B) — P420

P606-1	1	+18V
P606-2	2	GND
P606-3	3	-18V

P409 — AUDIO IN/OUT MONITOR(87D)

CH1 L IN GND	1	P461-1
CH1 L IN (H)	2	P461-2
CH1 L IN (C)	3	P461-3

P410 — AUDIO IN/OUT MONITOR(87D)

CH2 L IN GND	1	P461-4
CH2 L IN (H)	2	P461-5
CH2 L IN (C)	3	P461-6

P411 — AUDIO IN/OUT MONITOR(87D)

CH3 L IN GND	1	P461-7
CH3 L IN (H)	2	P461-8
CH3 L IN (C)	3	P461-9

P412 — AUDIO IN/OUT MONITOR(87D)

CH4 L IN GND	1	P461-10
CH4 L IN (H)	2	P461-11
CH4 L IN (C)	3	P461-12

P413 — AUDIO IN/OUT MONITOR(87D)

CUE L IN GND	1	P461-13
CUE L IN (H)	2	P461-14
CUE L IN (C)	3	P461-15

P414 — AUDIO IN/OUT MONITOR(87C)

CH1 L OUT GND	1	P463-1
CH1 L OUT (H)	2	P463-2
CH1 L OUT (C)	3	P463-3

P415 — AUDIO IN/OUT MONITOR(87C)

CH2 L OUT GND	1	P463-4
CH2 L OUT (H)	2	P463-5
CH2 L OUT (C)	3	P463-6

P416 — AUDIO IN/OUT MONITOR(87C)

CH3 L OUT GND	1	P463-7
CH3 L OUT (H)	2	P463-8
CH3 L OUT (C)	3	P463-9

P417 — AUDIO IN/OUT MONITOR(87C)

CH4 L OUT FND	1	P463-10
CH4 L OUT (H)	2	P463-11
CH4 L OUT (C)	3	P463-12

P418 — AUDIO IN/OUT MONITOR(87C)

CUE L OUT GND	1	P463-13
CUE L OUT (H)	2	P463-14
CUE L OUT (C)	3	P463-15

VIDEO IN/OUT S-3 (CUE AUDIO)

VIDEO IN/OUT (VEP88075A)

S MOTHER(38A) L MOTHER(52C) — P431

P250-2	1	INPUT VIDEO
P250-3	2	INPUT VIDEO GND
P014-7	3	WFM OUT
P014-8	4	WFM OUT GND
P014-1	5	VIDEO 1 OUT
P014-2	6	VIDEO 1 OUT GND
P014-3	7	VIDEO 2 OUT
P014-4	8	VIDEO 2 OUT GND
P014-5	9	VIDEO 3 OUT
P014-6	10	VIDEO 3 OUT GND

L MOTHER(55C) — P432

P029-1	1	REF VIDEO IN
P029-2	2	REF VIDEO IN GND
P029-3	3	BLACK BURST
P029-4	4	BLACK BURST GND
P029-5	5	EXT CF IN
P029-6	6	EXT CF IN GND
P029-7	7	CF PULSE OUT
P029-8	8	CF PULSE OUT GND

S MOTHER(42C) — P433

P258-1	1	+12V(A)
P258-2	2	-12V(A)
P258-3	3	GND (A)

(89C) — J413

		SYNC OUT
		GND

(89C) — J414

		SC OUT
		GND

L MOTHER(55A) — P434

P026-1	1	SYNC OUT
P026-2	2	GND(A)
P026-3	3	SC OUT
P026-4	4	GND(A)

J401.J402 — (89E)

		VIDEO IN
		GND

J403.J404 — (89D)

		REF IN
		GND

J405 — (89D)

		CF PULSE IN
		GND

J407 — (89D)

		VIDEO OUT 1
		GND

J408 — (89D)

		VIDEO OUT 2
		GND

J409 — (89C)

		VIDEO OUT 3
		GND

J410 — (89C)

		CF PULSE OUT
		GND

J411 — (89C)

		B.B OUT
		GND

J412 — (89C)

		WFM OUT
		GND

S3 (CUE AUDIO) (VEP84107A)

P401 — HEAD CONN(84B)

F E H	1	P4006 - 1
F E C	2	P4006 - 2
F E G	3	P4006 - 3

P402 — HEAD CONN(84B)

CUE E H	1	P4006 - 4
CUE E C	2	P4006 - 5
CUE E G	3	P4006 - 6

P403 — HEAD CONN(84B)

TC E H	1	P4006 - 7
TC E C	2	P4006 - 8
TC E G	3	P4006 - 9

HEAD CONN(84B) — P405

P4006 -13	1	CUE RP H
P4006 -14	2	CUE RP C
P4006 -15	3	CUE RP G

P404 — HEAD CONN(84B)

CTL E H	1	P4006 -10
CTL E C	2	P4006 -11
CTL E G	3	P4006 -12

67 68 69 70 71 72 73 74 75

INTERCONNECTION SCHEMATIC DIAGRAM (5/5)

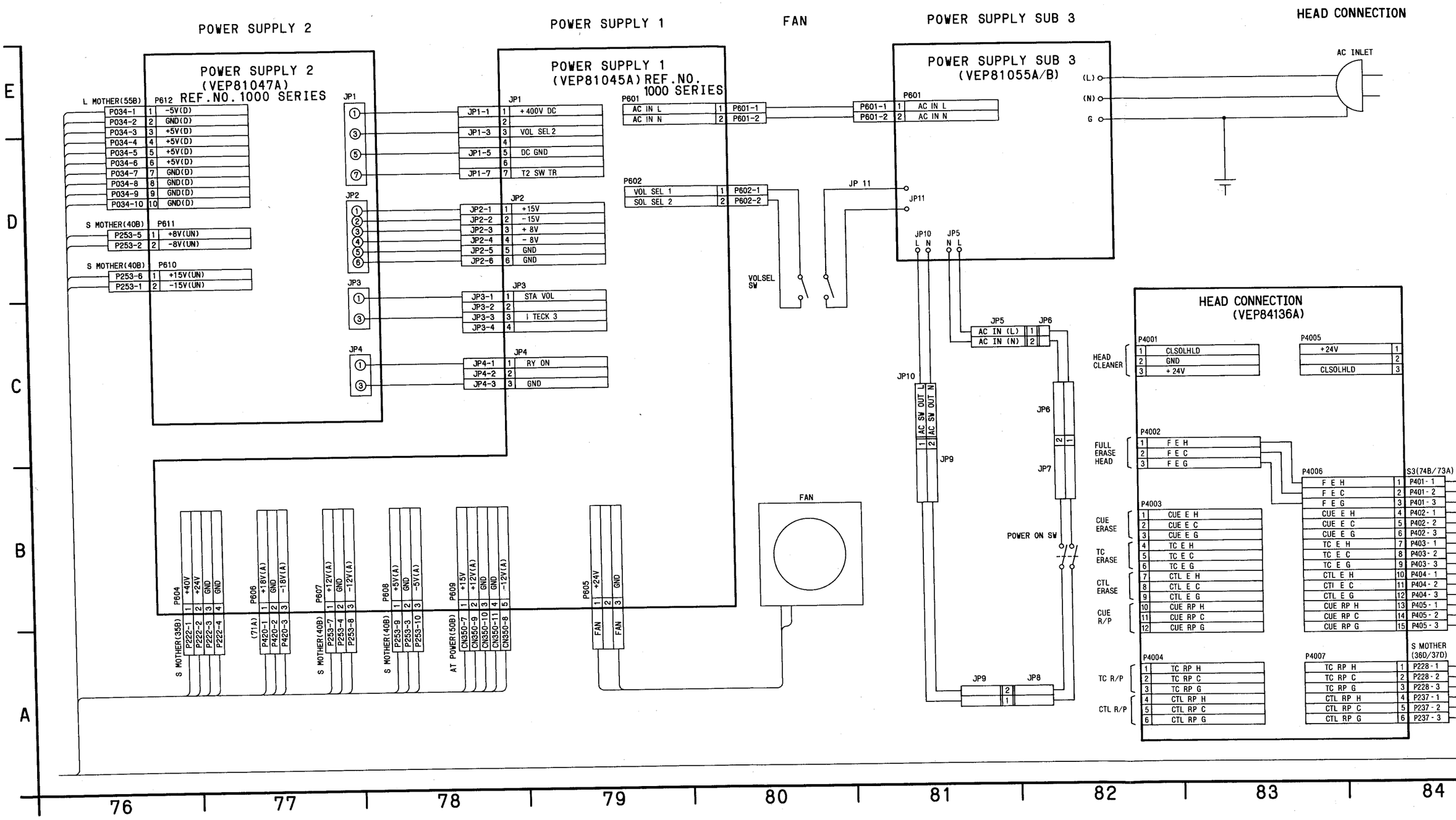

ONNECTION

AUDIO IN/OUT MONITOR

DIGITAL AUDIO IN
DIGITAL AUDIO OUT

RS-232C
GP-IB
REMOTE

50PIN PARALLEL I/O
V/A CONTROL

DIGITAL VIDEO IN
DIGITAL VIDEO OUT
AUX

RS-422A
REMOTE IN
REMOTE OUT
REMOTE IN/OUT

S MOTHER(36C)
L MOTHER(52D) P465

P230-4	1	CUE SIG
P230-5	2	GND
P230-6	3	SIG MUT
P010-9	4	MONI L OUT
P010-10	5	MONI L OUT GND
P010-11	6	MONI R OUT
P010-12	7	MONI R OUT GND

AUDIO I/O(69C) P466

P423-1	1	MOL PCML
P423-2	2	MOR PCML
P423-3	3	MONI LR +8
P423-4	4	MONI LR +4

AUDIO I/O(71A) P467

P419-1	1	+18V
P419-2	2	GND
P419-3	3	-18V

AUDIO I/O(69B) P469

P422-1	1	+12V(A)
P422-2	2	-12V(A)
P422-3	3	+5V
P422-4	4	GND

FR HP AMP(14C) P468

P353-1	1	GND
P353-2	2	MONI L SIG
P353-3	3	MONI R SIG
P353-4	4	SIG MUT
P353-5	5	GND
P353-6	6	+12V(A)
P353-7	7	-12V(A)

AUDIO IN/OUT
MONITOR
(VEP84122A)
REF.NO 4000 SERIES

AUDIO I/O(71D) P461

P409-1	1	CH1 L IN GND
P409-2	2	CH1 L IN (H)
P409-3	3	CH1 L IN (C)
P410-1	4	CH2 L IN GND
P410-2	5	CH2 L IN (H)
P410-3	6	CH2 L IN (C)
P411-1	7	CH3 L IN GND
P411-2	8	CH3 L IN (H)
P411-3	9	CH3 L IN (C)
P412-1	10	CH4 L IN GND
P412-2	11	CH4 L IN (H)
P412-3	12	CH4 L IN (C)
P413-1	13	CUE L IN GND
P413-2	14	CUE L IN (H)
P413-3	15	CUE L IN (C)

CH1 CH2 CH3 CH4 CUE IN

S MOTHER(37C) P462

P238-1	1	TC IN GND
P238-2	2	TC IN (H) +
P238-3	3	TC IN (C) -

TC

AUDIO I/O(71B) P463

P414-1	1	CH1 L OUT GND
P414-2	2	CH1 L OUT (H)
P414-3	3	CH1 L OUT (C)
P415-1	4	CH2 L OUT GND
P415-2	5	CH2 L OUT (H)
P415-3	6	CH2 L OUT (C)
P416-1	7	CH3 L OUT GND
P416-2	8	CH3 L OUT (H)
P416-3	9	CH3 L OUT (C)
P417-1	10	CH4 L OUT GND
P417-2	11	CH4 L OUT (H)
P417-3	12	CH4 L OUT (C)
P418-1	13	CUE L OUT GND
P418-2	14	CUE L OUT (H)
P418-3	15	CUE L OUT (C)

CH1 CH2 CH3 CH4 CUE OUT

S MOTHER(37C) P464

P238-4	1	TC OUT GND
P238-5	2	TC OUT (H) +
P238-6	3	TC OUT (C) -

TC

S3(74B/73A)

1	P401-1	
2	P401-2	
3	P401-3	
4	P402-1	
5	P402-2	
6	P402-3	
7	P403-1	
8	P403-2	
9	P403-3	
10	P404-1	
11	P404-2	
12	P404-3	
13	P405-1	
14	P405-2	
15	P405-3	

S MOTHER
(36D/37D)

1	P228-1	
2	P228-2	
3	P228-3	
4	P237-1	
5	P237-2	
6	P237-3	

DIGITAL AUDIO IN

S MOTHER(44A) P470

P269-1	1	DA I 1A
P269-2	2	DA I 1B
P269-3	3	DA I GND
P269-4	4	DA I 2A
P269-5	5	DA I 2B
P269-6	6	GND

D AUDIO CH1 D AUDIO CH2 IN

(VEP84125A)

DIGITAL AUDIO OUT

S MOTHER(44A) P471

P269-7	1	DA O 1A
P269-8	2	DA O 1B
P269-9	3	GND
P269-10	4	DA O 2A
P269-11	5	DA O 2B
P269-12	6	GND

D AUDIO CH1 D AUDIO CH2 OUT

(VEP84126A)

TO VIDEO IN/OUT (74D)

J401 J402 VIDEO IN
J403 J404 REF IN
J405 CF PULSE IN
J407 VIDEO OUT 1
J408 VIDEO OUT 2
J409 VIDEO OUT 3
J410 CF PULSE OUT
J411 BB OUT
J412 WFM OUT
J413 SYNC OUT
J414 SC OUT

J441 RS232C
REMOTE JACK 1 (59C)
REMOTE JACK 2 (66D)

J435 PARALEL I/O

J433 D VIDEO IN
REMOTE JACK 1 (62B)

J442 GP-IB
REMOTE JACK 1 (62D)

J434 D VIDEO OUT
REMOTE JACK 1 (62D)

J438 REMOTE IN (RS-422A)

J439 REMOTE OUT (RS-422A)
REMOTE JACK 1 (62C)

J443 REMOTE
REMOTE JACK 3 (68D)

J436 V/A CONTROL

REMOTE JACK 1 (64D)

J437 AUX

J440 REMOTE IN/OUT (RS-422A)

84 85 86 87 88 89 90 91 92

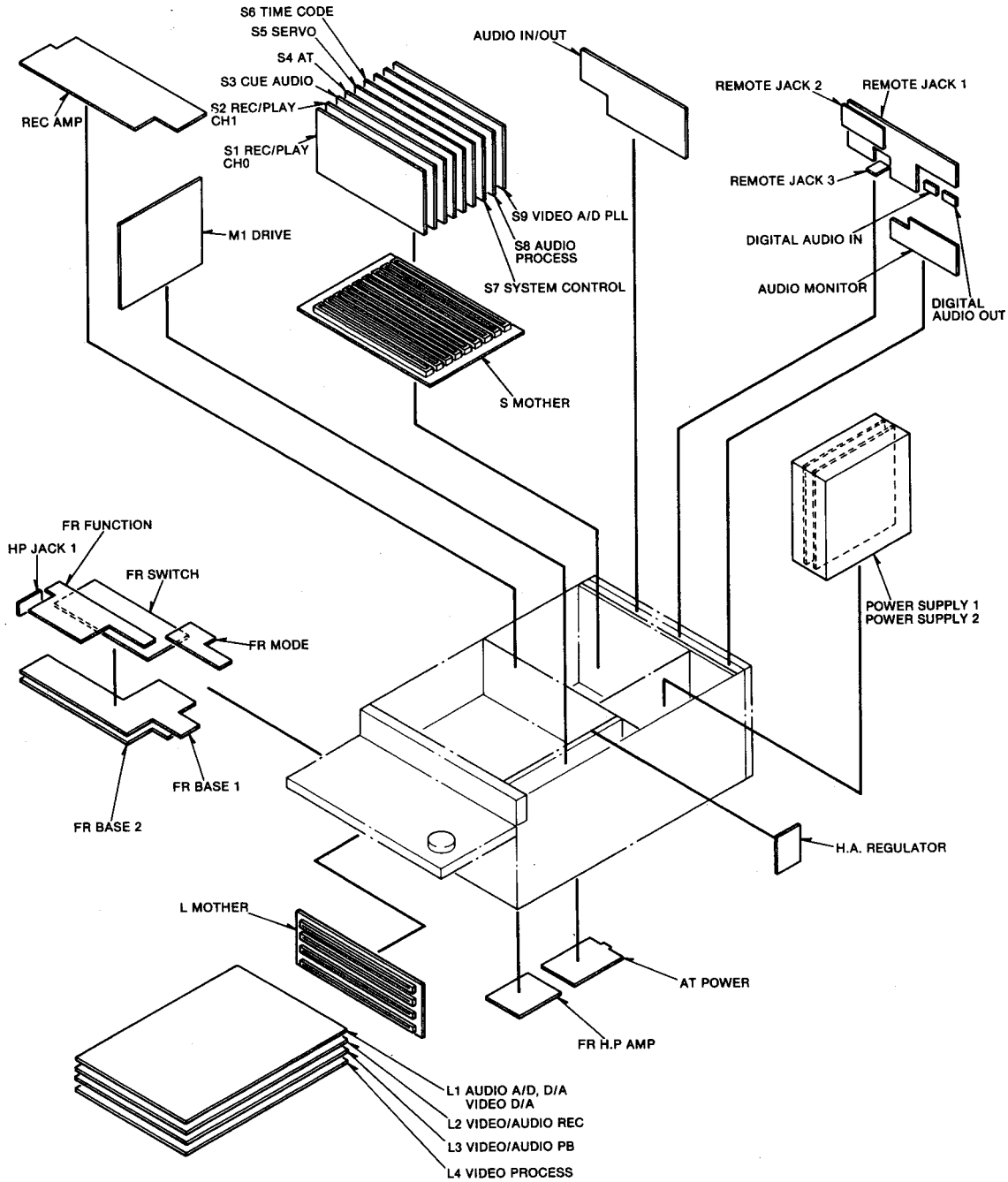
S6 TIME CODE
S5 SERVO
S4 AT
S3 CUE AUDIO
S2 REC/PLAY CH1
S1 REC/PLAY CH0
REC AMP
AUDIO IN/OUT
REMOTE JACK 2
REMOTE JACK 1
REMOTE JACK 3
M1 DRIVE
S9 VIDEO A/D PLL
S8 AUDIO PROCESS
S7 SYSTEM CONTROL
DIGITAL AUDIO IN
AUDIO MONITOR
DIGITAL AUDIO OUT
S MOTHER
FR FUNCTION
HP JACK 1
FR SWITCH
FR MODE
FR BASE 1
FR BASE 2
POWER SUPPLY 1
POWER SUPPLY 2
H.A. REGULATOR
L MOTHER
AT POWER
FR H.P AMP
L1 AUDIO A/D, D/A
VIDEO D/A
L2 VIDEO/AUDIO REC
L3 VIDEO/AUDIO PB
L4 VIDEO PROCESS

L1 AUDIO A/D D/A, VIDEO D/A

Transistors

Q4001	M-6 Ⓕ
Q4002	M-6 Ⓒ
Q4002	M-6 Ⓕ
Q4003	M-6 Ⓒ
Q4003	M-6 Ⓕ
Q4004	M-8 Ⓕ
Q4005	K-7 Ⓒ
Q4005	K-7 Ⓕ
Q4006	L-7 Ⓕ
Q4007	L-8 Ⓕ
Q4008	L-6 Ⓕ
Q4011	J-7 Ⓕ
Q4012	J-8 Ⓒ
Q4012	J-8 Ⓕ
Q4013	J-8 Ⓒ
Q4013	J-8 Ⓕ
Q4014	J-7 Ⓕ
Q4015	J-7 Ⓕ
Q4016	J-7 Ⓒ
Q4016	J-7 Ⓕ
Q4017	J-7 Ⓕ
Q4018	J-7 Ⓒ
Q4018	J-7 Ⓕ
Q4019	J-7 Ⓒ
Q4019	J-7 Ⓕ
Q4021	L-6 Ⓕ
Q4022	L-7 Ⓒ
Q4022	L-7 Ⓕ
Q4023	L-7 Ⓒ
Q4023	L-7 Ⓕ
Q4024	K-6 Ⓕ
Q4301	A-3 Ⓕ
Q4302	A-2 Ⓕ
Q4303	A-4 Ⓕ
Q4304	A-4 Ⓕ
Q4305	A-6 Ⓕ
Q4306	A-6 Ⓕ
Q4307	A-8 Ⓕ
Q4308	A-7 Ⓕ
Q4601	G-2 Ⓕ
Q4602	F-2 Ⓕ
Q4603	H-2 Ⓕ
Q4604	H-2 Ⓕ
Q4611	I-2 Ⓕ
Q4612	I-2 Ⓕ
Q4613	K-2 Ⓕ
Q4614	J-2 Ⓕ
Q4621	L-2 Ⓕ
Q4622	L-2 Ⓕ
Q4623	M-2 Ⓕ
Q4624	M-2 Ⓕ

Integrated Circuits

IC4001	N-7 Ⓒ
IC4002	N-6 Ⓒ
IC4002	N-6 Ⓕ
IC4003	N-6 Ⓒ
IC4003	N-6 Ⓕ
IC4004	N-7 Ⓒ
IC4004	N-7 Ⓕ
IC4005	L-7 Ⓒ
IC4006	N-7 Ⓒ
IC4006	N-7 Ⓕ
IC4007	L-6 Ⓒ
IC4007	L-6 Ⓕ
IC4008	N-8 Ⓒ
IC4009	L-7 Ⓒ
IC4010	L-7 Ⓒ
IC4011	N-7 Ⓒ
IC4011	N-7 Ⓕ
IC4012	J-7 Ⓒ
IC4012	J-7 Ⓕ
IC4013	J-7 Ⓒ
IC4013	J-7 Ⓕ
IC4014	K-6 Ⓒ
IC4015	K-6 Ⓒ
IC4016	K-8 Ⓒ
IC4017	K-8 Ⓒ
IC4201	G-8 Ⓒ
IC4202	F-6 Ⓒ
IC4203	G-7 Ⓒ
IC4204	G-6 Ⓒ
IC4205	G-6 Ⓒ
IC4206	F-7 Ⓒ
IC4207	G-8 Ⓒ
IC4208	F-8 Ⓒ
IC4211	G-5 Ⓒ
IC4211	G-5 Ⓕ
IC4212	F-5 Ⓒ
IC4213	H-6 Ⓒ
IC4214	H-7 Ⓒ
IC4215	H-6 Ⓒ
IC4301	A-2 Ⓒ
IC4302	B-2 Ⓒ
IC4302	B-2 Ⓕ
IC4303	B-2 Ⓒ
IC4304	C-2 Ⓒ
IC4305	C-3 Ⓒ
IC4306	C-2 Ⓒ
IC4307	C-3 Ⓒ
IC4308	D-2 Ⓒ
IC4308	D-2 Ⓕ
IC4309	D-1 Ⓒ
IC4310	A-3 Ⓒ
IC4310	A-3 Ⓕ
IC4311	E-2 Ⓒ
IC4311	E-2 Ⓕ
IC4312	E-4 Ⓒ
IC4312	E-4 Ⓕ
IC4313	A-3 Ⓒ
IC4314	B-4 Ⓒ
IC4314	B-4 Ⓕ
IC4315	B-4 Ⓒ
IC4316	C-4 Ⓒ
IC4317	C-4 Ⓒ
IC4318	C-4 Ⓒ
IC4319	C-4 Ⓒ
IC4320	D-4 Ⓒ
IC4320	D-4 Ⓕ
IC4321	D-3 Ⓒ
IC4322	A-5 Ⓒ
IC4322	A-5 Ⓕ
IC4331	A-5 Ⓒ
IC4332	B-5 Ⓒ
IC4332	B-5 Ⓕ
IC4333	B-6 Ⓒ
IC4334	C-5 Ⓒ
IC4335	C-6 Ⓒ
IC4336	C-5 Ⓒ
IC4337	C-6 Ⓒ
IC4338	D-6 Ⓒ
IC4338	D-6 Ⓕ
IC4339	D-5 Ⓒ
IC4340	A-6 Ⓒ
IC4340	A-6 Ⓕ
IC4341	E-5 Ⓒ
IC4341	E-5 Ⓕ
IC4342	E-8 Ⓒ
IC4342	E-8 Ⓕ
IC4343	A-7 Ⓒ
IC4344	B-7 Ⓒ
IC4344	B-7 Ⓕ
IC4345	B-7 Ⓒ
IC4346	C-7 Ⓒ
IC4347	C-8 Ⓒ
IC4348	C-7 Ⓒ
IC4349	C-8 Ⓒ
IC4350	D-8 Ⓒ
IC4351	D-7 Ⓒ
IC4352	A-8 Ⓒ
IC4352	A-8 Ⓕ
IC4601	F-5 Ⓒ
IC4601	F-5 Ⓕ
IC4602	G-4 Ⓒ
IC4602	G-4 Ⓕ
IC4603	G-3 Ⓒ
IC4603	G-3 Ⓕ
IC4604	G-2 Ⓒ
IC4605	G-2 Ⓒ
IC4606	F-2 Ⓒ
IC4607	F-2 Ⓒ
IC4608	F-2 Ⓒ
IC4609	H-1 Ⓒ
IC4609	H-1 Ⓕ
IC4610	G-1 Ⓒ
IC4610	G-1 Ⓕ
IC4611	H-4 Ⓒ
IC4611	H-4 Ⓕ
IC4612	H-3 Ⓒ
IC4612	H-3 Ⓕ
IC4613	H-2 Ⓒ
IC4614	H-2 Ⓒ
IC4615	H-2 Ⓒ
IC4616	G-2 Ⓒ
IC4617	H-2 Ⓒ
IC4621	I-5 Ⓒ
IC4621	I-5 Ⓕ
IC4622	J-4 Ⓒ
IC4622	J-4 Ⓕ
IC4623	I-3 Ⓒ
IC4623	I-3 Ⓕ
IC4624	J-2 Ⓒ
IC4625	I-2 Ⓒ
IC4626	I-2 Ⓒ
IC4627	I-2 Ⓒ
IC4628	I-2 Ⓒ
IC4629	K-1 Ⓒ
IC4629	K-1 Ⓕ
IC4630	I-1 Ⓒ
IC4630	I-1 Ⓕ
IC4631	K-4 Ⓒ
IC4631	K-4 Ⓕ
IC4632	K-3 Ⓒ
IC4632	K-3 Ⓕ
IC4633	K-2 Ⓒ
IC4634	K-2 Ⓒ
IC4635	J-2 Ⓒ
IC4636	J-2 Ⓒ
IC4636	J-2 Ⓕ
IC4637	J-2 Ⓒ
IC4641	L-5 Ⓒ
IC4641	L-5 Ⓕ
IC4642	L-4 Ⓒ
IC4642	L-4 Ⓕ
IC4643	L-3 Ⓒ
IC4643	L-3 Ⓕ
IC4644	L-2 Ⓒ
IC4645	L-2 Ⓒ
IC4646	L-2 Ⓒ
IC4647	K-2 Ⓒ
IC4648	L-2 Ⓒ
IC4649	M-1 Ⓒ
IC4649	M-1 Ⓕ
IC4650	L-1 Ⓒ
IC4650	L-1 Ⓕ
IC4651	N-4 Ⓒ
IC4651	N-4 Ⓕ
IC4652	M-3 Ⓒ
IC4652	M-3 Ⓕ
IC4653	N-2 Ⓒ
IC4654	M-2 Ⓒ
IC4655	M-2 Ⓒ
IC4656	M-2 Ⓒ
IC4657	M-2 Ⓒ

Test Points

TP4001	N-6 Ⓒ
TP4001	N-6 Ⓕ
TP4002	L-8 Ⓒ
TP4002	L-8 Ⓕ
TP4003	L-6 Ⓒ
TP4003	L-6 Ⓕ
TP4004	J-8 Ⓒ
TP4004	J-8 Ⓕ
TP4005	J-7 Ⓒ
TP4005	J-7 Ⓕ
TP4006	J-8 Ⓒ
TP4006	J-8 Ⓕ
TP4007	K-6 Ⓒ
TP4007	K-6 Ⓕ
TP4301	B-3 Ⓒ
TP4301	B-3 Ⓕ
TP4302	C-2 Ⓒ
TP4302	C-2 Ⓕ
TP4303	C-2 Ⓒ
TP4303	C-2 Ⓕ
TP4304	B-4 Ⓒ
TP4304	B-4 Ⓕ
TP4305	C-3 Ⓒ
TP4305	C-3 Ⓕ
TP4306	C-4 Ⓒ
TP4306	C-4 Ⓕ
TP4311	B-6 Ⓒ
TP4311	B-6 Ⓕ
TP4312	C-5 Ⓒ
TP4312	C-5 Ⓕ
TP4313	C-6 Ⓒ
TP4313	C-6 Ⓕ
TP4314	B-8 Ⓒ
TP4314	B-8 Ⓕ
TP4315	C-7 Ⓒ
TP4315	C-7 Ⓕ
TP4316	C-8 Ⓒ
TP4316	C-8 Ⓕ
TP4601	G-2 Ⓒ
TP4601	G-2 Ⓕ
TP4602	H-2 Ⓒ
TP4602	H-2 Ⓕ
TP4603	C-2 Ⓒ
TP4603	C-2 Ⓕ
TP4604	K-2 Ⓒ
TP4604	K-2 Ⓕ
TP4605	L-2 Ⓒ
TP4605	L-2 Ⓕ
TP4606	M-2 Ⓒ
TP4606	M-2 Ⓕ
TPG4001	N-5 Ⓒ
TPG4001	N-5 Ⓕ
TPG4002	K-7 Ⓒ
TPG4002	K-7 Ⓕ
TPG4201	G-8 Ⓒ
TPG4201	G-8 Ⓕ
TPG4301	C-2 Ⓒ
TPG4301	C-2 Ⓕ
TPG4302	C-3 Ⓒ
TPG4302	C-3 Ⓕ
TPG4303	C-5 Ⓒ
TPG4303	C-5 Ⓕ
TPG4304	C-7 Ⓒ
TPG4304	C-7 Ⓕ
TPG4601	F-1 Ⓒ
TPG4601	F-1 Ⓕ
TPG4602	H-1 Ⓒ
TPG4602	H-1 Ⓕ
TPG4603	I-1 Ⓒ
TPG4603	I-1 Ⓕ
TPG4604	J-1 Ⓒ
TPG4604	J-1 Ⓕ
TPG4605	L-1 Ⓒ
TPG4605	L-1 Ⓕ
TPG4606	M-1 Ⓒ
TPG4606	M-1 Ⓕ

Adjustments

VR4001	A-8 Ⓒ
VR4001	A-8 Ⓕ
VR4002	L-8 Ⓒ
VR4002	L-8 Ⓕ
VR4004	L-7 Ⓒ
VR4004	L-7 Ⓕ
VR4005	L-6 Ⓒ
VR4005	L-6 Ⓕ
VR4006	J-8 Ⓒ
VR4006	J-8 Ⓕ
VR4301	B-2 Ⓒ
VR4301	B-2 Ⓕ
VR4302	B-3 Ⓒ
VR4302	B-3 Ⓕ
VR4303	B-5 Ⓒ
VR4303	B-5 Ⓕ
VR4304	B-7 Ⓒ
VR4304	B-7 Ⓕ
VR4601	F-2 Ⓒ
VR4601	F-2 Ⓕ
VR4602	G-2 Ⓒ
VR4602	G-2 Ⓕ
VR4603	I-2 Ⓒ
VR4603	I-2 Ⓕ
VR4604	J-2 Ⓒ
VR4604	J-2 Ⓕ
VR4605	K-2 Ⓒ
VR4605	K-2 Ⓕ
VR4606	M-2 Ⓒ
VR4606	M-2 Ⓕ

Connectors

P001	O-2 Ⓒ
P001	O-2 Ⓕ
P002	O-5 Ⓒ
P002	O-5 Ⓕ

ADDRESS INFORMATION
Ⓒ... COMPONENT SIDE
Ⓕ... FOIL SIDE

L1 AUDIO A/D D/A, VIDEO D/A P.C. BOARD (VEP84105B) [FOR PAL]
(VEP84105A) [FOR NTSC]

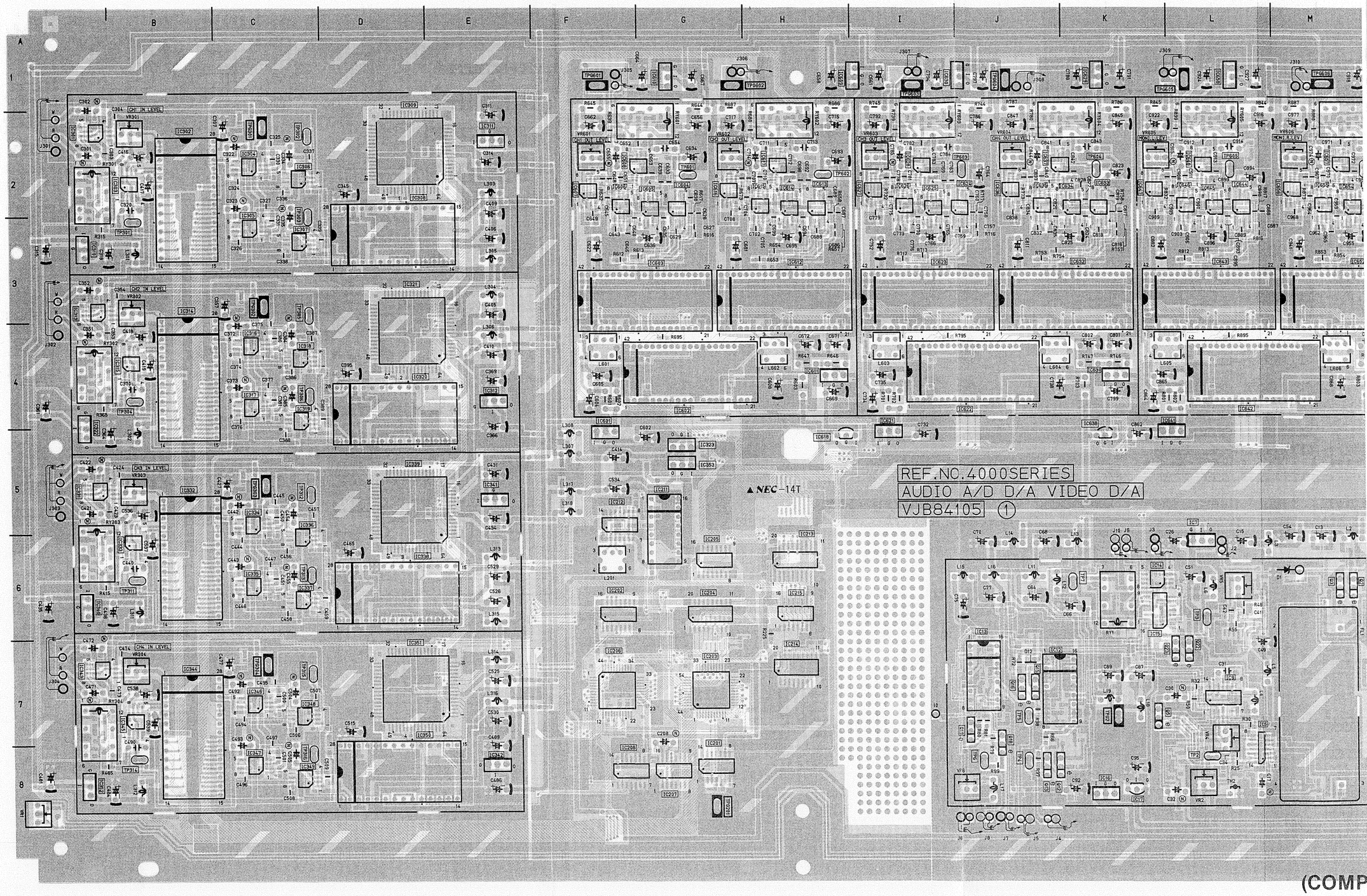

(COMP

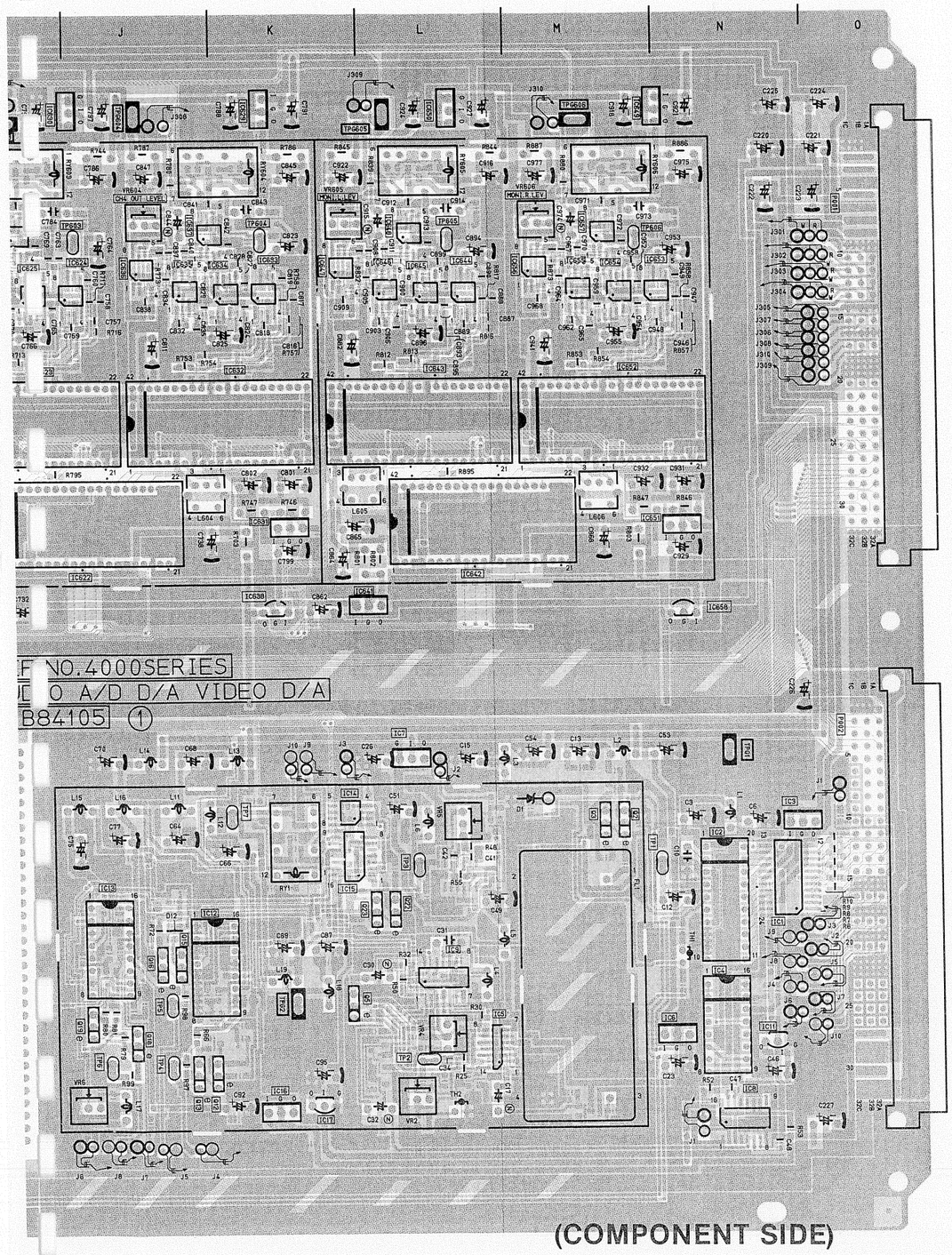

(COMPONENT SIDE)

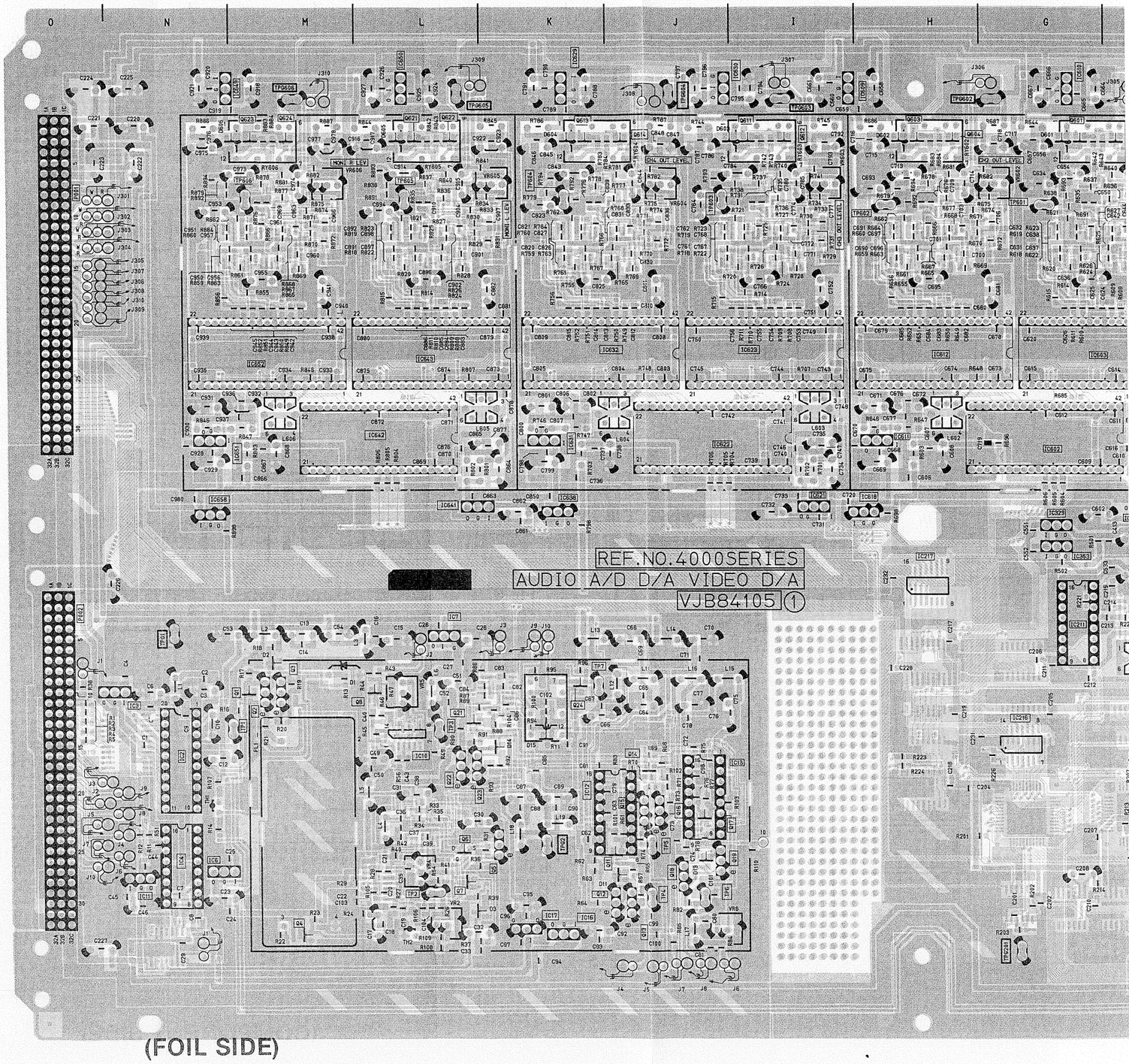

(FOIL SIDE)

REF.NO.4000SERIES

AUDIO A/D D/A VIDEO D/A

VJB84105 (1)

L SIDE)

L2 VIDEO/AUDIO REC P.C. BOARD (VEP88072D) [FOR PAL]
(VEP88072C) [FOR NTSC]

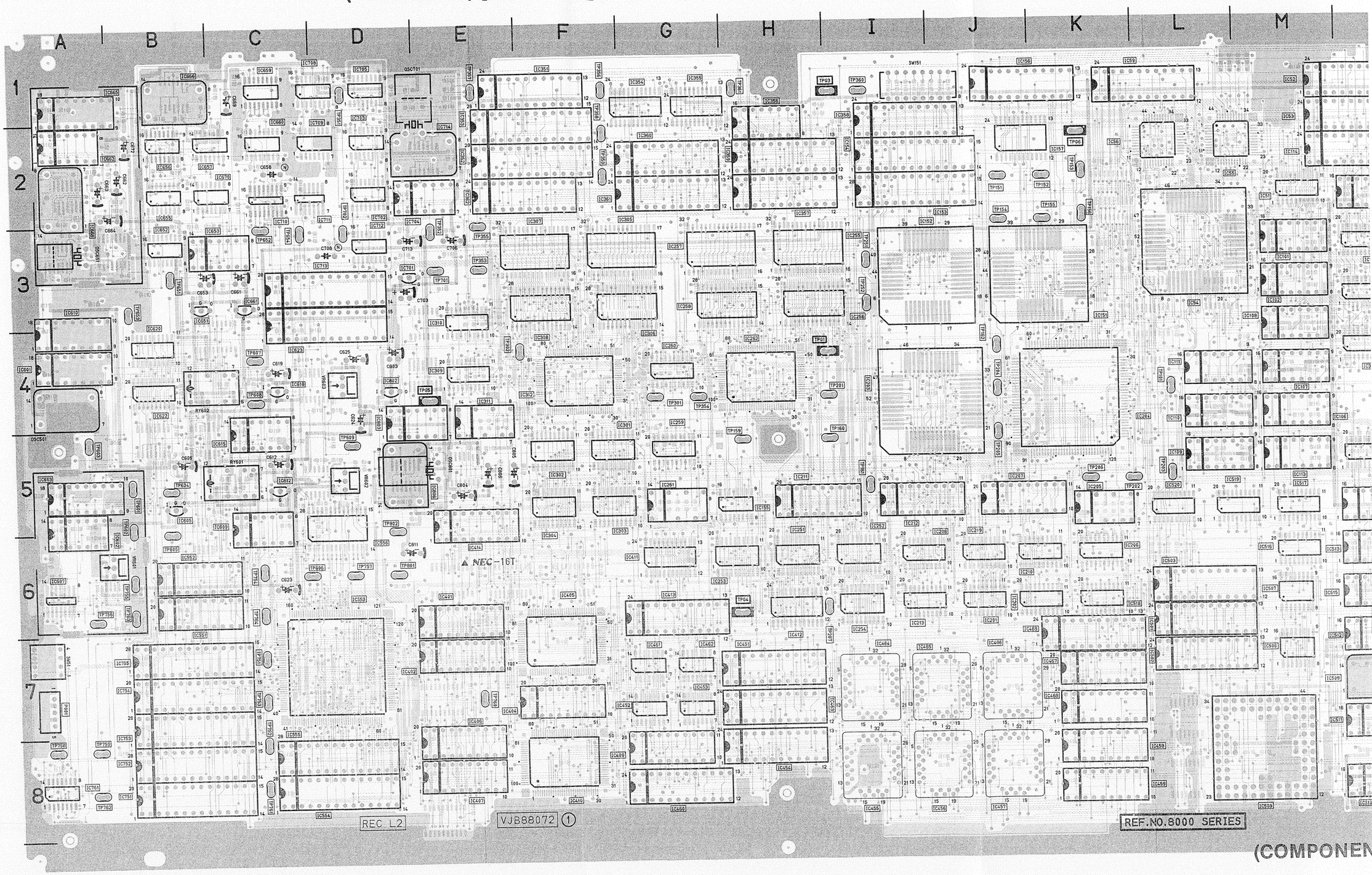

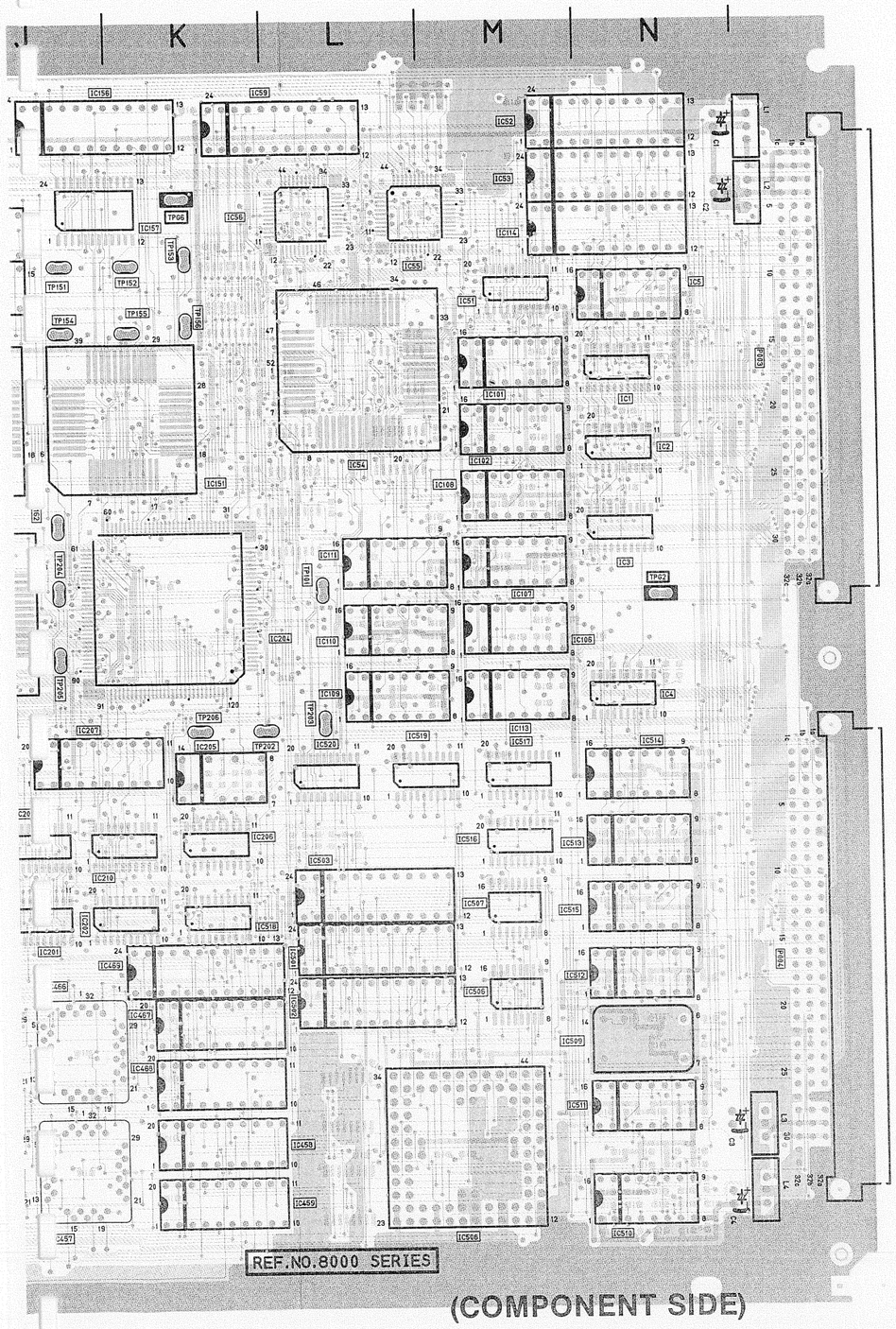

(COMPONENT SIDE)

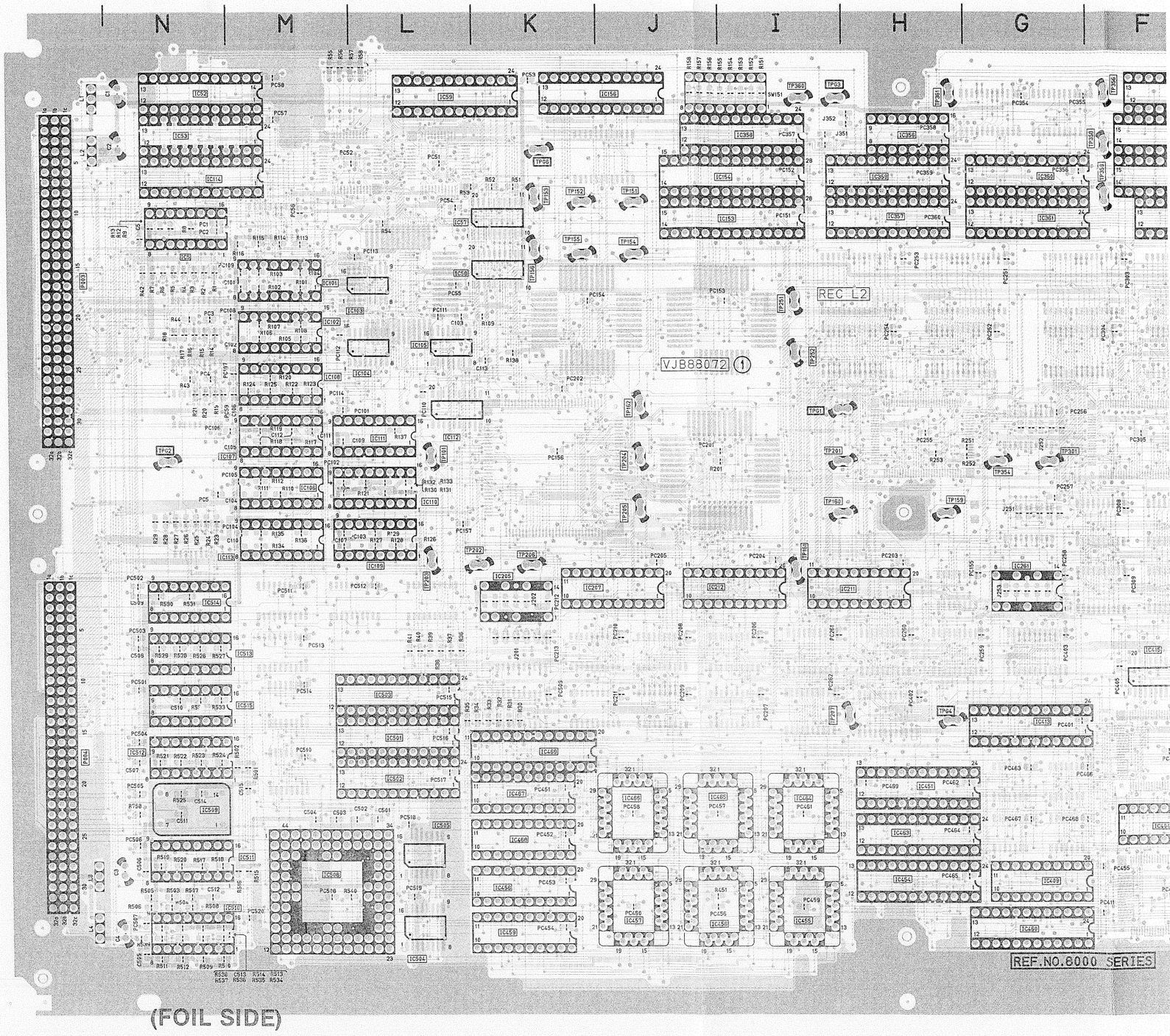

(FOIL SIDE)

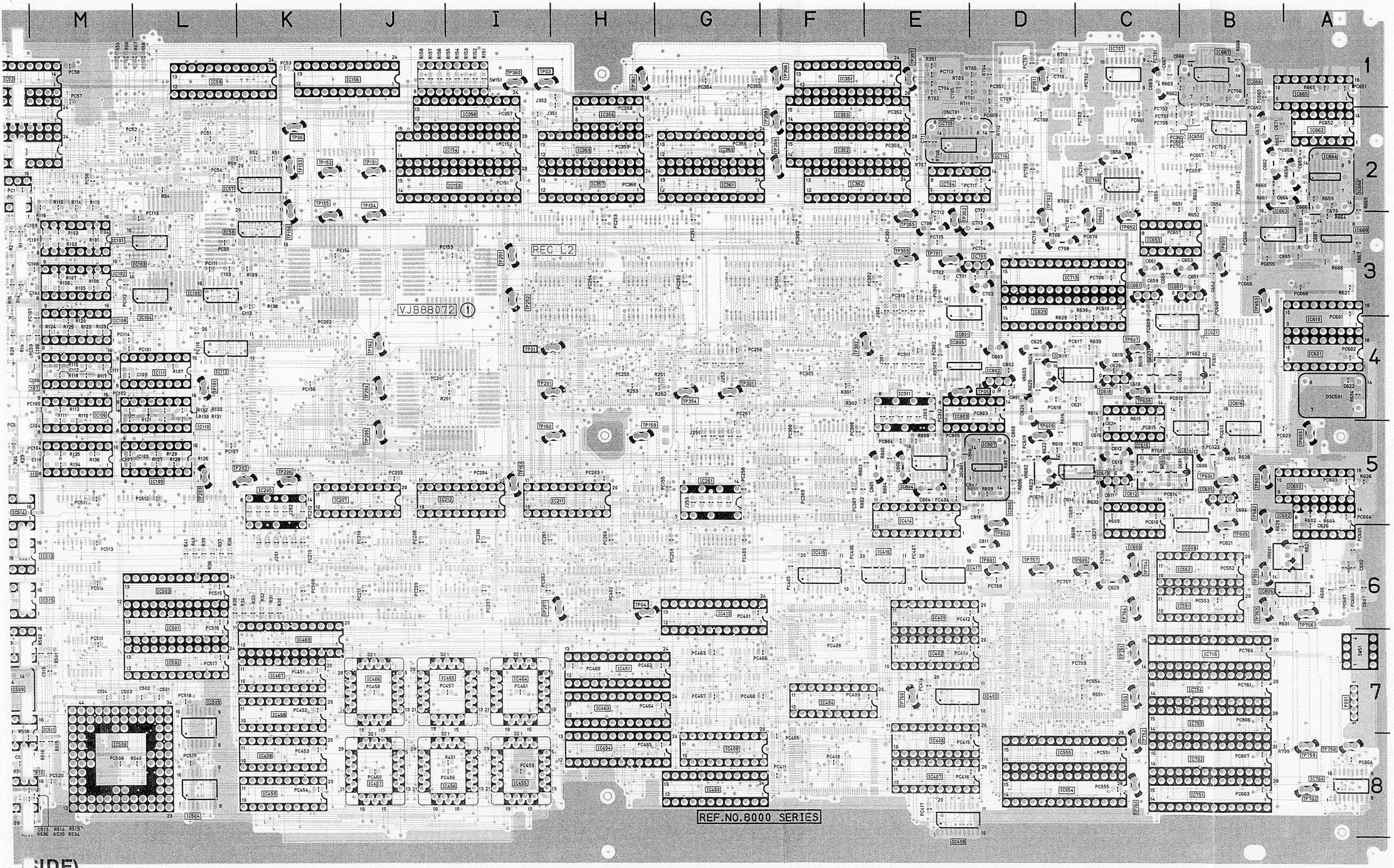
M
L
K
J
I
H
G
F
E
D
C
B
A
1
2
3
4
5
6
7
8
REC L2
VJB88072 1
REF.NO.8000 SERIES

. SIDE)

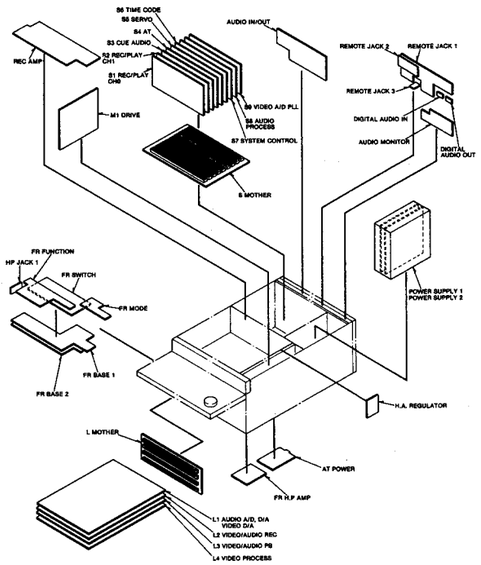

L2 VIDEO/AUDIO REC

Transistors

Q8601	C-5 Ⓕ
Q8602	C-4 Ⓕ

Integrated Circuits

IC8001	N-3 Ⓒ
IC8002	N-3 Ⓒ
IC8003	N-4 Ⓒ
IC8004	N-5 Ⓒ
IC8005	N-2 Ⓒ
IC8005	N-2 Ⓕ
IC8051	M-2 Ⓒ
IC8052	M-1 Ⓒ
IC8052	M-1 Ⓕ
IC8053	M-2 Ⓒ
IC8053	M-2 Ⓕ
IC8054	L-3 Ⓒ
IC8055	L-2 Ⓒ
IC8056	K-2 Ⓒ
IC8057	K-2 Ⓕ
IC8058	K-3 Ⓕ
IC8059	K-1 Ⓒ
IC8059	K-1 Ⓕ
IC8101	M-3 Ⓒ
IC8101	M-3 Ⓕ
IC8102	M-3 Ⓒ
IC8102	M-3 Ⓕ
IC8103	L-3 Ⓕ
IC8104	L-3 Ⓕ
IC8105	L-3 Ⓕ
IC8106	M-5 Ⓒ
IC8106	M-5 Ⓕ
IC8107	M-4 Ⓒ
IC8107	M-4 Ⓕ
IC8108	M-4 Ⓒ
IC8108	M-4 Ⓕ
IC5109	L-5 Ⓒ
IC5109	L-5 Ⓕ
IC8110	L-5 Ⓒ
IC8110	L-5 Ⓕ
IC8111	L-4 Ⓒ
IC8111	L-4 Ⓕ
IC8112	L-4 Ⓕ
IC8113	M-5 Ⓒ
IC8113	M-5 Ⓕ
IC8114	M-2 Ⓒ
IC8114	M-2 Ⓕ
IC8151	K-4 Ⓒ
IC8152	I-3 Ⓒ
IC8153	J-2 Ⓒ
IC8153	J-2 Ⓕ
IC8154	I-2 Ⓒ
IC8154	I-2 Ⓕ
IC8155	H-5 Ⓒ
IC8156	J-1 Ⓒ
IC8156	J-1 Ⓕ
IC8157	K-2 Ⓒ
IC8201	J-6 Ⓒ
IC8202	J-6 Ⓒ
IC8203	I-4 Ⓒ
IC8204	L-5 Ⓒ
IC8205	K-5 Ⓒ
IC8205	K-5 Ⓕ
IC8206	K-6 Ⓒ
IC8207	J-5 Ⓒ
IC8207	J-5 Ⓕ
IC8208	J-6 Ⓒ
IC8209	J-6 Ⓒ
IC8210	J-6 Ⓒ
IC8211	H-5 Ⓒ
IC8211	H-5 Ⓕ
IC8212	I-5 Ⓒ
IC8212	I-5 Ⓕ
IC8213	I-6 Ⓒ
IC8251	H-6 Ⓒ
IC8252	I-6 Ⓒ
IC8253	G-6 Ⓒ
IC8254	I-6 Ⓒ
IC8255	I-3 Ⓒ
IC8256	I-4 Ⓒ
IC8257	G-3 Ⓒ
IC8258	G-3 Ⓒ
IC8259	G-5 Ⓒ
IC8260	G-4 Ⓒ
IC8261	G-5 Ⓒ
IC8261	G-5 Ⓕ
IC8262	H-4 Ⓒ
IC8301	F-5 Ⓒ
IC8302	F-5 Ⓒ
IC8303	F-6 Ⓒ
IC8304	F-6 Ⓒ
IC8305	G-3 Ⓒ
IC8306	G-4 Ⓒ
IC8307	F-3 Ⓒ
IC8308	F-4 Ⓒ
IC8309	E-4 Ⓒ
IC8310	E-4 Ⓒ
IC8311	E-4 Ⓒ
IC8311	E-4 Ⓕ
IC8312	F-4 Ⓒ
IC8351	F-1 Ⓒ
IC8351	F-1 Ⓕ
IC8352	E-2 Ⓒ
IC8352	E-2 Ⓕ
IC8353	E-2 Ⓒ
IC8353	E-2 Ⓕ
IC8354	G-4 Ⓒ
IC8354	G-4 Ⓕ
IC8355	G-1 Ⓒ
IC8356	H-2 Ⓒ
IC8356	H-2 Ⓕ
IC8357	H-2 Ⓒ
IC8357	H-2 Ⓕ
IC8358	I-2 Ⓒ
IC8358	I-2 Ⓕ
IC8359	H-2 Ⓒ
IC8359	H-2 Ⓕ
IC8360	G-2 Ⓒ
IC8360	G-2 Ⓕ
IC8361	G-2 Ⓒ
IC8361	G-2 Ⓕ
IC8362	E-2 Ⓒ
IC8362	E-2 Ⓕ
IC8401	E-6 Ⓒ
IC8401	E-6 Ⓕ
IC8402	E-7 Ⓒ
IC8402	E-7 Ⓕ
IC8403	E-6 Ⓒ
IC8403	E-6 Ⓕ
IC8404	F-7 Ⓒ
IC8404	F-7 Ⓕ
IC8405	F-6 Ⓒ
IC8406	E-8 Ⓒ
IC8406	E-8 Ⓕ
IC8407	E-8 Ⓒ
IC8407	E-8 Ⓕ
IC8408	E-8 Ⓒ
IC8409	G-8 Ⓒ
IC8409	G-8 Ⓕ
IC8410	F-8 Ⓒ
IC8411	G-6 Ⓒ
IC8412	H-7 Ⓒ
IC8413	G-6 Ⓒ
IC8413	G-6 Ⓕ
IC8414	E-6 Ⓒ
IC8414	E-6 Ⓕ
IC8415	F-6 Ⓕ
IC8416	E-6 Ⓕ
IC8417	E-6 Ⓕ
IC8451	H-7 Ⓒ
IC8451	H-7 Ⓕ
IC8452	F-7 Ⓒ
IC8453	G-7 Ⓒ
IC8454	H-8 Ⓒ
IC8454	H-8 Ⓕ
IC8455	I-8 Ⓒ
IC8455	I-8 Ⓕ
IC8456	J-8 Ⓒ
IC8456	J-8 Ⓕ
IC8457	J-8 Ⓒ
IC8457	J-8 Ⓕ
IC8458	K-8 Ⓒ
IC8458	K-8 Ⓕ
IC8459	K-8 Ⓒ
IC8459	K-8 Ⓕ
IC8460	G-8 Ⓒ
IC8460	G-8 Ⓕ
IC8461	G-7 Ⓒ
IC8462	G-7 Ⓒ
IC8463	H-7 Ⓒ
IC8463	H-7 Ⓕ
IC8464	I-7 Ⓒ
IC8464	I-7 Ⓕ
IC8465	I-7 Ⓒ
IC8465	I-7 Ⓕ
IC8466	J-7 Ⓒ
IC8466	J-7 Ⓕ
IC8467	K-7 Ⓒ
IC8467	K-7 Ⓕ
IC8468	K-7 Ⓒ
IC8468	K-7 Ⓕ
IC8469	J-7 Ⓒ
IC8469	J-7 Ⓕ
IC8501	L-6 Ⓒ
IC8501	L-6 Ⓕ
IC8502	L-7 Ⓒ
IC8502	L-7 Ⓕ
IC8503	L-6 Ⓒ
IC8503	L-6 Ⓕ
IC8504	L-8 Ⓕ
IC8505	L-7 Ⓕ
IC8506	M-7 Ⓒ
IC8507	M-6 Ⓒ
IC8508	M-8 Ⓒ
IC8508	M-8 Ⓕ
IC8509	M-7 Ⓒ
IC8510	N-8 Ⓒ
IC8510	N-8 Ⓕ
IC8511	M-8 Ⓒ
IC8511	M-8 Ⓕ
IC8512	M-7 Ⓒ
IC8512	M-7 Ⓕ
IC8513	M-6 Ⓒ
IC8513	M-6 Ⓕ
IC8514	N-5 Ⓒ
IC8514	N-5 Ⓕ
IC8515	M-6 Ⓒ
IC8515	M-6 Ⓕ
IC8516	M-6 Ⓒ
IC8517	M-5 Ⓒ
IC8518	K-6 Ⓒ
IC8519	L-5 Ⓒ
IC8520	L-5 Ⓒ
IC8551	B-6 Ⓒ
IC8551	B-6 Ⓕ
IC8552	B-6 Ⓒ
IC8552	B-6 Ⓕ
IC8553	D-6 Ⓒ
IC8554	C-8 Ⓒ
IC8554	C-8 Ⓕ
IC8555	C-8 Ⓒ
IC8555	C-8 Ⓕ
IC8556	D-6 Ⓒ
IC8601	A-4 Ⓒ
IC8601	A-4 Ⓕ
IC8602	A-5 Ⓒ
IC8602	A-5 Ⓕ
IC8603	A-5 Ⓒ
IC8603	A-5 Ⓕ
IC8605	B-5 Ⓒ
IC8605	B-5 Ⓕ
IC8606	A-6 Ⓕ
IC8607	A-6 Ⓒ
IC8608	B-6 Ⓕ
IC8609	C-5 Ⓒ
IC8609	C-5 Ⓕ
IC8610	A-3 Ⓒ
IC8610	A-3 Ⓕ
IC8612	C-5 Ⓒ
IC8612	C-5 Ⓕ
IC8613	C-5 Ⓕ
IC8614	B-5 Ⓕ
IC8615	C-5 Ⓒ
IC8615	C-5 Ⓕ
IC8616	B-5 Ⓕ
IC8618	C-4 Ⓒ
IC8618	C-4 Ⓕ
IC8619	D-4 Ⓕ
IC8620	B-4 Ⓒ
IC8621	B-4 Ⓕ
IC8622	B-4 Ⓒ
IC8623	C-4 Ⓒ
IC8623	C-4 Ⓕ
IC8651	B-3 Ⓒ
IC8651	B-3 Ⓕ
IC8652	B-3 Ⓒ
IC8653	C-3 Ⓒ
IC8653	C-3 Ⓕ
IC8655	B-2 Ⓒ
IC8656	B-2 Ⓒ
IC8657	C-2 Ⓒ
IC8658	B-2 Ⓒ
IC8659	C-1 Ⓒ
IC8660	C-2 Ⓒ
IC8661	C-3 Ⓒ
IC8661	C-3 Ⓕ
IC8662	A-2 Ⓒ
IC8662	A-2 Ⓕ
IC8664	A-2 Ⓕ
IC8665	A-1 Ⓒ
IC8665	A-1 Ⓕ
IC8666	B-1 Ⓒ
IC8666	B-1 Ⓕ
IC8667	B-1 Ⓕ
IC8668	A-2 Ⓒ
IC8668	A-2 Ⓕ
IC8669	A-3 Ⓕ
IC8670	C-2 Ⓒ
IC8701	D-3 Ⓒ
IC8701	D-3 Ⓕ
IC8702	D-2 Ⓒ
IC8703	D-1 Ⓒ
IC8704	D-2 Ⓒ
IC8704	D-2 Ⓕ
IC8706	C-2 Ⓕ
IC8707	C-1 Ⓕ
IC8708	D-1 Ⓒ
IC8709	D-2 Ⓒ
IC8710	C-2 Ⓒ
IC8711	D-2 Ⓒ
IC8712	D-3 Ⓒ
IC8713	D-3 Ⓒ
IC8713	D-3 Ⓕ
IC8714	E-2 Ⓒ
IC8714	E-2 Ⓕ
IC8715	E-2 Ⓕ
IC8751	B-8 Ⓒ
IC8751	B-8 Ⓕ
IC8752	B-8 Ⓒ
IC8752	B-8 Ⓕ
IC8753	B-7 Ⓒ
IC8753	B-7 Ⓕ
IC8754	B-7 Ⓒ
IC8754	B-7 Ⓕ
IC8755	B-7 Ⓒ
IC8755	B-7 Ⓕ
IC8760	A-8 Ⓕ
IC8761	A-8 Ⓒ
IC8801	E-4 Ⓕ
IC8802	D-4 Ⓔ
IC8802	D-4 Ⓕ
IC8803	D-4 Ⓒ
IC8803	D-4 Ⓕ
IC8805	E-4 Ⓔ
IC8806	D-5 Ⓒ
IC8806	D-5 Ⓕ
IC8807	D-5 Ⓕ

Test Points

TP8101	L-4 Ⓒ
TP8101	L-4 Ⓕ
TP8151	J-2 Ⓒ
TP8151	J-2 Ⓕ
TP8152	K-2 Ⓒ
TP8152	K-2 Ⓕ
TP8153	K-2 Ⓒ
TP8153	K-2 Ⓕ
TP8154	J-2 Ⓒ
TP8154	J-2 Ⓕ
TP8155	K-2 Ⓒ
TP8155	K-2 Ⓕ
TP8156	K-2 Ⓒ
TP8156	K-2 Ⓕ
TP8159	H-5 Ⓒ
TP8159	H-5 Ⓕ
TP8160	I-5 Ⓒ
TP8160	I-5 Ⓕ
TP8161	I-5 Ⓒ
TP8161	I-5 Ⓕ
TP8162	J-4 Ⓒ
TP8162	J-4 Ⓕ
TP8201	I-4 Ⓒ
TP8201	I-4 Ⓕ
TP8202	K-5 Ⓒ
TP8202	K-5 Ⓕ
TP8203	L-5 Ⓒ
TP8203	L-5 Ⓕ
TP8204	J-4 Ⓒ
TP8204	J-4 Ⓕ
TP8205	J-5 Ⓒ
TP8205	J-5 Ⓕ
TP8206	K-5 Ⓒ
TP8206	K-5 Ⓕ
TP8207	H-6 Ⓒ
TP8207	H-6 Ⓕ
TP8251	I-3 Ⓒ
TP8251	I-3 Ⓕ
TP8252	I-3 Ⓒ
TP8252	I-3 Ⓕ
TP8301	G-4 Ⓒ
TP8301	G-4 Ⓕ
TP8302	F-4 Ⓒ
TP8302	F-4 Ⓕ
TP8351	D-1 Ⓒ
TP8351	D-1 Ⓕ
TP8352	E-3 Ⓒ
TP8352	E-3 Ⓕ
TP8353	E-3 Ⓒ
TP8353	E-3 Ⓕ
TP8354	G-4 Ⓒ
TP8354	G-4 Ⓕ
TP8355	E-3 Ⓒ
TP8355	E-3 Ⓕ
TP8356	F-1 Ⓒ
TP8356	F-1 Ⓕ
TP8357	E-1 Ⓒ
TP8357	E-1 Ⓕ
TP8358	F-2 Ⓒ
TP8358	F-2 Ⓕ
TP8359	F-2 Ⓒ
TP8359	F-2 Ⓕ
TP8360	I-1 Ⓒ
TP8360	I-1 Ⓕ
TP8361	H-1 Ⓒ
TP8361	H-1 Ⓕ
TP8601	B-5 Ⓒ
TP8601	B-5 Ⓕ
TP8602	B-5 Ⓒ
TP8602	B-5 Ⓕ
TP8603	A-5 Ⓒ
TP8603	A-5 Ⓕ
TP8604	B-5 Ⓒ
TP8604	B-5 Ⓕ
TP8605	B-6 Ⓒ
TP8605	B-6 Ⓕ
TP8606	C-6 Ⓒ
TP8606	C-6 Ⓕ
TP8607	C-4 Ⓒ
TP8607	C-4 Ⓕ
TP8608	C-4 Ⓒ
TP8608	C-4 Ⓕ
TP8609	D-5 Ⓒ
TP8609	D-5 Ⓕ
TP8651	B-3 Ⓒ
TP8651	B-3 Ⓕ
TP8652	C-3 Ⓒ
TP8652	C-3 Ⓕ
TP8653	B-3 Ⓒ
TP8653	B-3 Ⓕ
TP8654	C-3 Ⓒ
TP8654	C-3 Ⓕ
TP8701	E-3 Ⓒ
TP8701	E-3 Ⓕ
TP8702	D-2 Ⓒ
TP8702	D-2 Ⓕ
TP8751	C-7 Ⓒ
TP8751	C-7 Ⓕ
TP8752	C-8 Ⓒ
TP8752	C-8 Ⓕ
TP8753	C-7 Ⓒ
TP8753	C-7 Ⓕ
TP8754	C-6 Ⓒ
TP8754	C-6 Ⓕ
TP8755	B-6 Ⓒ
TP8755	B-6 Ⓕ
TP8756	A-6 Ⓒ
TP8756	A-6 Ⓕ
TP8757	D-6 Ⓒ
TP8757	D-6 Ⓕ
TP8758	A-8 Ⓒ
TP8758	A-8 Ⓕ
TP8759	A-8 Ⓒ
TP8759	A-8 Ⓕ
TP8760	E-7 Ⓒ
TP8760	E-7 Ⓕ
TP8761	C-8 Ⓒ
TP8761	C-8 Ⓕ
TP8762	A-8 Ⓒ
TP8762	A-8 Ⓕ
TP8763	B-6 Ⓒ
TP8763	B-6 Ⓕ
TP8764	C-6 Ⓒ
TP8764	C-6 Ⓕ
TP8801	D-6 Ⓒ
TP8801	D-6 Ⓕ
TP8802	D-6 Ⓒ
TP8802	D-6 Ⓕ
TPG8001	H-4 Ⓒ
TPG8001	H-4 Ⓕ
TPG8002	N-4 Ⓒ
TPG8002	N-4 Ⓕ
TPG8003	I-1 Ⓒ
TPG8003	I-1 Ⓕ
TPG8004	H-6 Ⓒ
TPG8004	H-6 Ⓕ
TPG8005	E-4 Ⓒ
TPG8005	E-4 Ⓕ
TPG8006	K-2 Ⓒ
TPG8006	K-2 Ⓕ

Adjustments

VR8601	B-6 Ⓒ
VR8601	B-6 Ⓕ
VR8602	D-5 Ⓒ
VR8602	D-5 Ⓕ
VR8603	D-4 Ⓒ
VR8603	D-4 Ⓕ

Connectors

P001	A-7 Ⓒ
P001	A-7 Ⓕ

ADDRESS INFORMATION
Ⓒ... COMPONENT SIDE
Ⓕ... FOIL SIDE

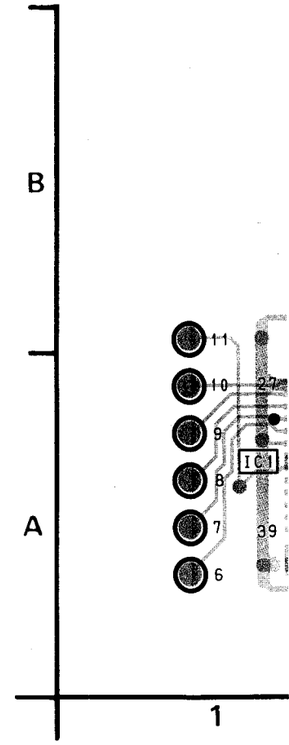

L2 VIDEO/AUDIO REC SUB P.C. BOARD (VEP88081A)

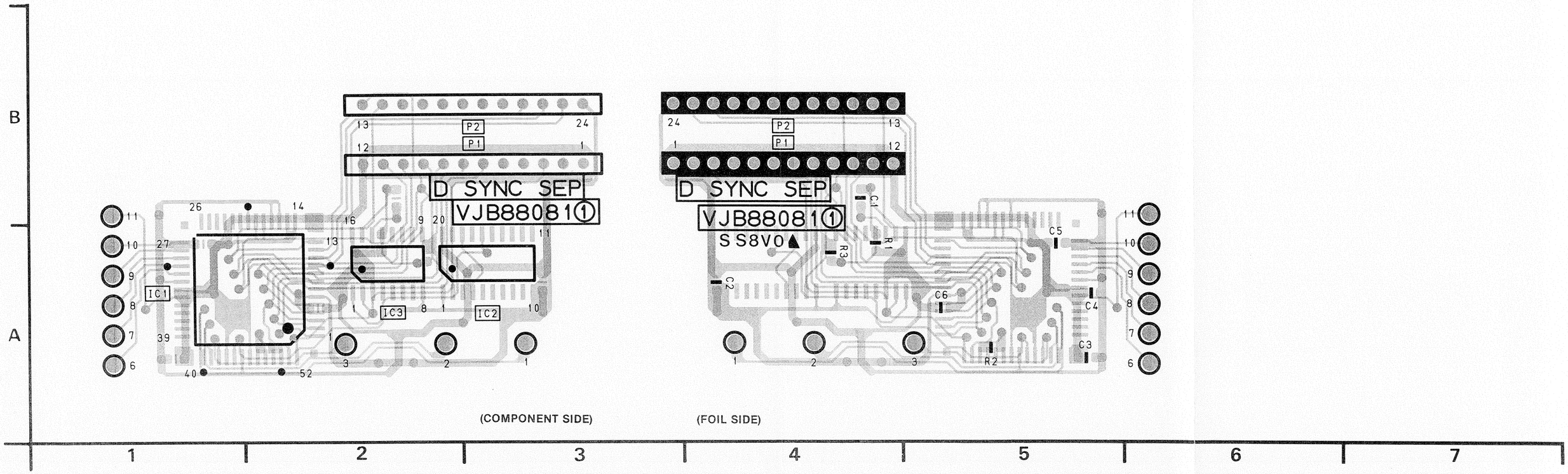

L3 VIDEO/AUDIO PB

Integrated Circuits

IC8001	C-6 Ⓒ
IC8002	C-6 Ⓒ
IC8002	C-7 Ⓕ
IC8003	C-6 Ⓒ
IC8003	C-7 Ⓕ
IC8004	C-6 Ⓒ
IC8004	C-7 Ⓕ
IC8005	C-6 Ⓒ
IC8005	C-7 Ⓕ
IC8006	B-6 Ⓒ
IC8007	B-6 Ⓒ
IC8008	B-6 Ⓒ
IC8008	B-7 Ⓕ
IC8009	B-6 Ⓒ
IC8009	B-7 Ⓕ
IC8010	B-6 Ⓒ
IC8010	B-7 Ⓕ
IC8011	B-6 Ⓒ
IC8011	B-7 Ⓕ
IC8012	B-6 Ⓒ
IC8013	A-6 Ⓒ
IC8014	C-5 Ⓒ
IC8014	C-7 Ⓕ
IC8015	C-5 Ⓒ
IC8015	C-7 Ⓕ
IC8016	B-6 Ⓒ
IC8016	B-7 Ⓕ
IC8017	B-6 Ⓒ
IC8018	A-6 Ⓒ
IC8018	A-7 Ⓕ
IC8019	A-6 Ⓒ
IC8019	A-7 Ⓕ
IC8020	A-6 Ⓒ
IC8021	A-6 Ⓒ
IC8022	A-6 Ⓒ
IC8023	C-5 Ⓒ
IC8023	C-7 Ⓕ
IC8024	C-5 Ⓒ
IC8024	C-7 Ⓕ
IC8025	C-5 Ⓒ
IC8025	C-7 Ⓕ
IC8026	B-5 Ⓒ
IC8027	B-5 Ⓒ
IC8028	B-5 Ⓒ
IC8029	B-5 Ⓒ
IC8030	B-5 Ⓒ
IC8031	A-6 Ⓒ
IC8032	A-5 Ⓒ
IC8032	A-8 Ⓕ
IC8033	A-5 Ⓒ
IC8033	A-8 Ⓕ
IC8034	A-5 Ⓒ
IC8034	A-8 Ⓕ
IC8035	A-5 Ⓒ
IC8035	A-8 Ⓕ
IC8036	A-5 Ⓒ
IC8037	B-5 Ⓒ
IC8037	B-7 Ⓕ
IC8038	B-5 Ⓒ
IC8039	B-5 Ⓒ
IC8040	B-5 Ⓒ
IC8041	A-5 Ⓒ
IC8042	C-5 Ⓒ
IC8043	C-5 Ⓒ
IC8044	C-5 Ⓒ
IC8045	C-5 Ⓒ
IC8046	C-5 Ⓒ
IC8047	B-5 Ⓒ
IC8048	B-5 Ⓒ
IC8049	B-5 Ⓒ
IC8050	B-5 Ⓒ
IC8051	A-5 Ⓒ
IC8052	A-5 Ⓒ
IC8053	A-5 Ⓒ
IC8054	A-5 Ⓒ
IC8055	C-5 Ⓒ
IC8055	C-8 Ⓕ
IC8056	C-5 Ⓒ
IC8056	C-8 Ⓕ
IC8057	C-5 Ⓒ
IC8057	C-8 Ⓕ
IC8058	C-5 Ⓒ
IC8058	C-8 Ⓕ
IC8059	B-5 Ⓒ
IC8059	B-8 Ⓕ
IC8060	B-5 Ⓒ
IC8061	B-5 Ⓒ
IC8062	B-5 Ⓒ
IC8062	B-8 Ⓕ
IC8063	B-5 Ⓒ
IC8064	A-5 Ⓒ
IC8065	A-5 Ⓒ
IC8066	A-5 Ⓒ
IC8067	A-5 Ⓒ
IC8068	C-4 Ⓒ
IC8068	C-8 Ⓕ
IC8069	B-4 Ⓒ
IC8070	A-5 Ⓒ
IC8071	A-5 Ⓒ
IC8072	A-4 Ⓒ
IC8073	A-5 Ⓒ
IC8074	C-4 Ⓒ
IC8075	C-4 Ⓒ
IC8076	B-4 Ⓒ
IC8076	B-8 Ⓕ
IC8077	B-4 Ⓒ
IC8077	B-8 Ⓕ
IC8078	B-8 Ⓕ
IC8079	B-4 Ⓒ
IC8080	B-4 Ⓒ
IC8081	A-4 Ⓒ
IC8082	A-4 Ⓒ
IC8083	D-4 Ⓒ
IC8083	D-8 Ⓕ
IC8084	C-4 Ⓒ
IC8085	C-4 Ⓒ
IC8086	C-4 Ⓒ
IC8087	C-4 Ⓒ
IC8088	B-4 Ⓒ
IC8089	B-4 Ⓒ
IC8089	B-9 Ⓕ
IC8090	B-4 Ⓒ
IC8090	B-9 Ⓕ
IC8091	B-4 Ⓒ
IC8092	A-4 Ⓒ
IC8093	A-4 Ⓒ
IC8094	D-4 Ⓒ
IC8094	D-9 Ⓕ
IC8095	C-4 Ⓒ
IC8096	C-3 Ⓒ
IC8097	A-4 Ⓒ
IC8098	A-4 Ⓒ
IC8099	A-4 Ⓒ
IC8100	B-4 Ⓒ
IC8100	B-9 Ⓕ
IC8101	A-3 Ⓒ
IC8102	A-4 Ⓒ
IC8103	D-3 Ⓒ
IC8104	C-3 Ⓒ
IC8104	C-9 Ⓕ
IC8105	C-3 Ⓒ
IC8105	C-10 Ⓕ
IC8106	C-3 Ⓒ
IC8106	C-9 Ⓕ
IC8107	C-3 Ⓒ
IC8108	C-3 Ⓒ
IC8109	B-3 Ⓒ
IC8110	B-3 Ⓒ
IC8111	B-3 Ⓒ
IC8112	B-3 Ⓒ
IC8113	A-3 Ⓒ
IC8114	A-3 Ⓒ
IC8115	A-3 Ⓒ
IC8116	C-3 Ⓒ
IC8117	C-3 Ⓒ
IC8118	C-3 Ⓒ
IC8119	A-3 Ⓒ
IC8120	C-3 Ⓒ
IC8121	C-3 Ⓒ
IC8122	C-3 Ⓒ
IC8123	C-3 Ⓒ
IC8124	C-3 Ⓒ
IC8125	B-3 Ⓒ
IC8125	B-10 Ⓕ
IC8126	B-3 Ⓒ
IC8126	B-10 Ⓕ
IC8127	B-3 Ⓒ
IC8127	B-10 Ⓕ
IC8128	B-3 Ⓒ
IC8128	B-10 Ⓕ
IC8129	B-3 Ⓒ
IC8129	B-10 Ⓕ
IC8130	A-3 Ⓒ
IC8130	A-9 Ⓕ
IC8131	A-3 Ⓒ
IC8131	A-9 Ⓕ
IC8132	A-3 Ⓒ
IC8132	A-9 Ⓕ
IC8133	A-3 Ⓒ
IC8134	A-3 Ⓒ
IC8134	A-10 Ⓕ
IC8135	D-2 Ⓒ
IC8136	C-2 Ⓒ
IC8137	C-2 Ⓒ
IC8138	B-3 Ⓒ
IC8140	B-3 Ⓒ
IC8141	B-3 Ⓒ
IC8142	A-3 Ⓒ
IC8143	C-2 Ⓒ
IC8144	C-2 Ⓒ
IC8145	C-2 Ⓒ
IC8146	B-2 Ⓒ
IC8147	B-2 Ⓒ
IC8147	B-10 Ⓕ
IC8148	B-2 Ⓒ
IC8149	A-2 Ⓒ
IC8150	A-2 Ⓒ
IC8151	A-2 Ⓒ
IC8152	C-2 Ⓒ
IC8153	C-2 Ⓒ
IC8154	B-2 Ⓒ
IC8155	A-2 Ⓒ
IC8156	A-2 Ⓒ
IC8157	D-2 Ⓒ
IC8157	D-11 Ⓕ
IC8158	C-2 Ⓒ
IC8158	C-11 Ⓕ
IC8159	C-2 Ⓒ
IC8160	C-2 Ⓒ
IC8160	C-11 Ⓕ
IC8161	C-2 Ⓒ
IC8161	C-11 Ⓕ
IC8162	C-2 Ⓒ
IC8162	C-11 Ⓕ
IC8163	C-2 Ⓒ
IC8164	B-2 Ⓒ
IC8165	B-2 Ⓒ
IC8166	B-11 Ⓒ
IC8166	B-2 Ⓕ
IC8167	B-2 Ⓒ
IC8168	A-2 Ⓒ
IC8169	A-2 Ⓒ
IC8170	A-2 Ⓒ
IC8171	C-1 Ⓒ
IC8172	C-2 Ⓒ
IC8173	C-2 Ⓒ
IC8174	C-1 Ⓒ
IC8174	B-11 Ⓕ
IC8175	C-2 Ⓒ
IC8176	B-2 Ⓒ
IC8177	B-2 Ⓒ
IC8178	B-1 Ⓒ
IC8178	B-11 Ⓕ
IC8179	B-1 Ⓒ
IC8179	B-11 Ⓕ
IC8180	B-2 Ⓒ
IC8181	A-2 Ⓒ
IC8182	A-2 Ⓒ
IC8183	A-2 Ⓒ
IC8184	C-1 Ⓒ
IC8185	B-2 Ⓒ
IC8186	B-1 Ⓒ
IC8187	A-1 Ⓒ
IC8188	A-1 Ⓒ
IC8189	A-1 Ⓒ
IC8189	A-11 Ⓕ
IC8190	C-1 Ⓒ
IC8191	C-1 Ⓒ
IC8192	C-1 Ⓒ
IC8193	C-1 Ⓒ
IC8194	C-1 Ⓒ
IC8195	B-1 Ⓒ
IC8196	B-1 Ⓒ
IC8197	B-1 Ⓒ
IC8198	C-1 Ⓒ
IC8199	C-1 Ⓒ
IC8200	C-1 Ⓒ
IC8201	C-1 Ⓒ
IC8202	C-1 Ⓒ
IC8203	C-1 Ⓒ
IC8204	B-1 Ⓒ
IC8205	A-1 Ⓒ
IC8206	C-1 Ⓒ
IC8207	C-1 Ⓒ
IC8208	C-1 Ⓒ
IC8209	C-1 Ⓒ
IC8210	C-1 Ⓒ
IC8211	C-1 Ⓒ
IC8212	B-1 Ⓒ
IC8213	B-1 Ⓒ
IC8214	B-1 Ⓒ
IC8215	B-1 Ⓒ
IC8216	A-1 Ⓒ
IC8217	C-8 Ⓕ
IC8218	C-8 Ⓕ
IC8219	B-8 Ⓕ
IC8220	C-9 Ⓕ
IC8221	C-9 Ⓕ
IC8222	B-9 Ⓕ
IC8223	B-9 Ⓕ
IC8224	C-10 Ⓕ
IC8225	C-10 Ⓕ
IC8226	D-10 Ⓕ
IC8227	C-10 Ⓕ
IC8228	B-3 Ⓒ
IC8229	C-11 Ⓕ
IC8230	B-11 Ⓕ
IC8231	B-11 Ⓕ
IC8232	A-11 Ⓕ
IC8233	A-4 Ⓒ
IC8233	A-8 Ⓕ
IC8234	A-4 Ⓒ

Test Points

TP8001	C-6 Ⓒ
TP8001	C-7 Ⓕ
TP8002	C-6 Ⓒ
TP8002	C-7 Ⓕ
TP8003	C-6 Ⓒ
TP8003	C-7 Ⓕ
TP8004	C-6 Ⓒ
TP8004	C-7 Ⓕ
TP8005	C-5 Ⓒ
TP8005	C-7 Ⓕ
TP8006	C-5 Ⓒ
TP8006	C-8 Ⓕ
TP8007	B-5 Ⓒ
TP8007	B-8 Ⓕ
TP8008	B-5 Ⓒ
TP8008	B-8 Ⓕ
TP8009	B-4 Ⓒ
TP8009	B-8 Ⓕ
TP8010	B-4 Ⓒ
TP8010	B-8 Ⓕ
TP8011	A-4 Ⓒ
TP8011	B-8 Ⓕ
TP8012	A-4 Ⓒ
TP8012	A-8 Ⓕ
TP8013	A-4 Ⓒ
TP8013	A-8 Ⓕ
TP8014	A-4 Ⓒ
TP8014	A-8 Ⓕ
TP8015	A-4 Ⓒ
TP8015	A-8 Ⓕ
TP8016	A-4 Ⓒ
TP8016	A-8 Ⓕ
TP8017	A-4 Ⓒ
TP8017	A-8 Ⓕ
TP8018	A-4 Ⓒ
TP8018	A-8 Ⓕ
TP8019	A-4 Ⓒ
TP8019	A-8 Ⓕ
TP8020	A-4 Ⓒ
TP8020	A-8 Ⓕ
TP8021	B-4 Ⓒ
TP8021	B-8 Ⓕ
TP8022	C-4 Ⓒ
TP8022	C-8 Ⓕ
TP8023	C-4 Ⓒ
TP8023	C-9 Ⓕ
TP8024	B-4 Ⓒ
TP8024	B-9 Ⓕ
TP8025	A-4 Ⓒ
TP8025	A-9 Ⓕ
TP8026	A-4 Ⓒ
TP8026	A-9 Ⓕ
TP8027	A-4 Ⓒ
TP8027	A-9 Ⓕ
TP8028	B-9 Ⓕ
TP8029	C-3 Ⓒ
TP8029	C-9 Ⓕ
TP8030	B-3 Ⓒ
TP8030	B-9 Ⓕ
TP8031	B-3 Ⓒ
TP8031	B-9 Ⓕ
TP8032	B-3 Ⓒ
TP8032	B-9 Ⓕ
TP8033	B-3 Ⓒ
TP8033	B-9 Ⓕ
TP8034	C-3 Ⓒ
TP8034	C-10 Ⓕ
TP8035	C-3 Ⓒ
TP8035	C-10 Ⓕ
TP8036	C-3 Ⓒ
TP8036	C-10 Ⓕ
TP8037	C-3 Ⓒ
TP8037	C-10 Ⓕ
TP8038	A-3 Ⓒ
TP8038	A-10 Ⓕ
TP8039	A-3 Ⓒ
TP8039	A-10 Ⓕ
TP8040	A-3 Ⓒ
TP8040	A-10 Ⓕ
TP8041	A-3 Ⓒ
TP8041	A-10 Ⓕ
TP8042	A-3 Ⓒ
TP8042	A-10 Ⓕ
TP8043	A-3 Ⓒ
TP8043	A-10 Ⓕ
TP8044	C-2 Ⓒ
TP8044	C-10 Ⓕ
TP8045	C-3 Ⓒ
TP8045	C-10 Ⓕ
TP8046	B-3 Ⓒ
TP8046	B-10 Ⓕ
TP8047	B-3 Ⓒ
TP8047	B-10 Ⓕ
TP8048	B-3 Ⓒ
TP8048	B-9 Ⓕ
TP8049	B-3 Ⓒ
TP8049	B-10 Ⓕ
TP8050	B-3 Ⓒ
TP8050	B-10 Ⓕ
TP8051	C-2 Ⓒ
TP8051	C-10 Ⓕ
TP8052	C-2 Ⓒ
TP8052	C-10 Ⓕ
TP8053	C-2 Ⓒ
TP8053	C-10 Ⓕ
TP8054	C-2 Ⓒ
TP8054	C-10 Ⓕ
TP8055	C-2 Ⓒ
TP8055	C-10 Ⓕ
TP8056	B-2 Ⓒ
TP8056	B-10 Ⓕ
TP8057	B-2 Ⓒ
TP8057	B-10 Ⓕ
TP8058	B-2 Ⓒ
TP8058	B-10 Ⓕ
TP8059	C-2 Ⓒ
TP8059	C-11 Ⓕ
TP8060	A-2 Ⓒ
TP8060	A-11 Ⓕ
TP8061	B-2 Ⓒ
TP8061	B-11 Ⓕ
TP8062	B-2 Ⓒ
TP8062	B-11 Ⓕ
TP8063	B-2 Ⓒ
TP8063	B-11 Ⓕ
TP8064	B-2 Ⓒ
TP8064	B-11 Ⓕ
TP8065	C-1 Ⓒ
TP8065	C-11 Ⓕ
TP8066	C-1 Ⓒ
TP8066	C-12 Ⓕ
TP8067	C-1 Ⓒ
TP8067	C-12 Ⓕ
TP8068	B-1 Ⓒ
TP8068	B-12 Ⓕ
TPG8001	C-6 Ⓒ
TPG8001	D-7 Ⓕ
TPG8002	B-6 Ⓒ
TPG8002	B-7 Ⓕ
TPG8003	C-4 Ⓒ
TPG8003	C-9 Ⓕ
TPG8004	B-4 Ⓒ
TPG8004	B-9 Ⓕ
TPG8005	A-3 Ⓒ
TPG8005	A-9 Ⓕ
TPG8006	C-3 Ⓒ
TPG8006	C-10 Ⓕ
TPG8007	A-2 Ⓒ
TPG8007	A-11 Ⓕ
TPG8008	C-1 Ⓒ
TPG8008	C-12 Ⓕ
TPG8009	A-1 Ⓒ
TPG8009	A-12 Ⓕ

Connectors

P8005	C-6 Ⓒ
P8005	C-7 Ⓕ
P8006	A-6 Ⓒ
P8006	A-7 Ⓕ
CP1	A-6 Ⓒ
CP1	A-7 Ⓕ
CP2	C-5 Ⓒ
CP2	C-8 Ⓕ
CP3	C-4 Ⓒ
CP3	C-8 Ⓕ
CP4	C-5 Ⓒ
CP4	C-8 Ⓕ
CP5	C-4 Ⓒ
CP5	C-9 Ⓕ
CP6	C-3 Ⓒ
CP6	C-9 Ⓕ
CP7	B-3 Ⓒ
CP7	B-10 Ⓕ
CP8	A-1 Ⓒ
CP8	A-12 Ⓕ
CP9	A-1 Ⓒ
CP9	A-12 Ⓕ

Switches

SW1	B-1 Ⓒ
SW1	B-12 Ⓕ
SW2	A-1 Ⓒ
SW2	A-12 Ⓕ
SW3	A-1 Ⓒ
SW3	A-12 Ⓕ
SW4	A-1 Ⓒ
SW4	A-12 Ⓕ

ADDRESS INFORMATION
Ⓒ... COMPONENT SIDE
Ⓕ... FOIL SIDE

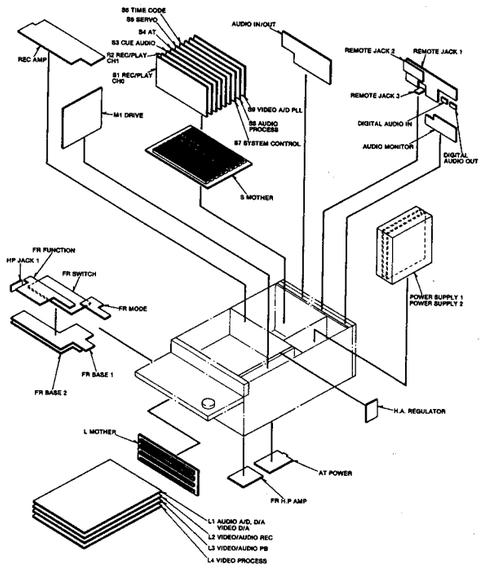

L3 VIDEO/AUDIO PB P.C. BOARD (VEP88070D) [FOR PAL]
(VEP88070C) [FOR NTSC]

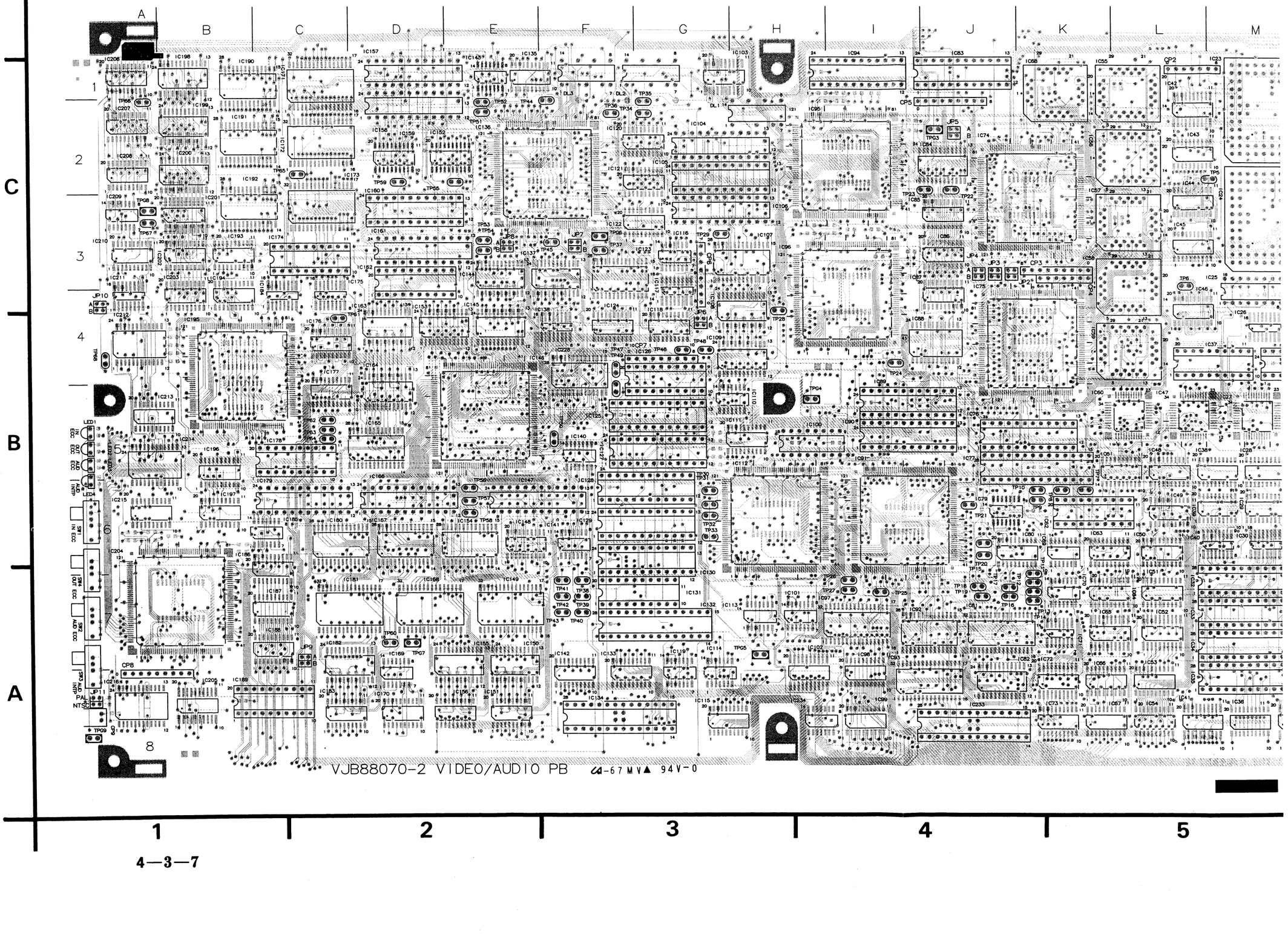

L3 VIDEO/AUDIO PB P.C. BOARD (VEP88070D) [FOR PAL]
(VEP88070C) [FOR NTSC]

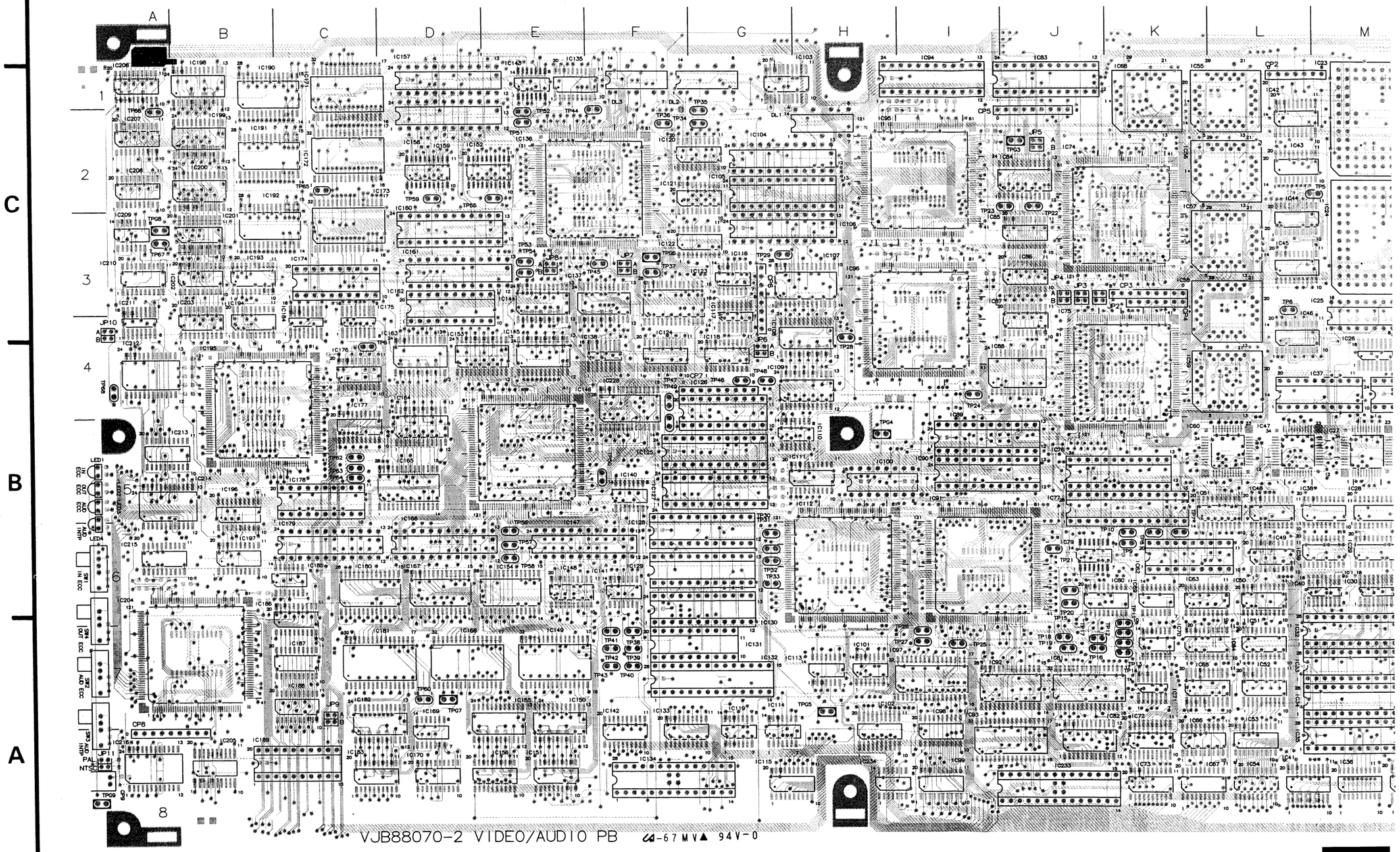

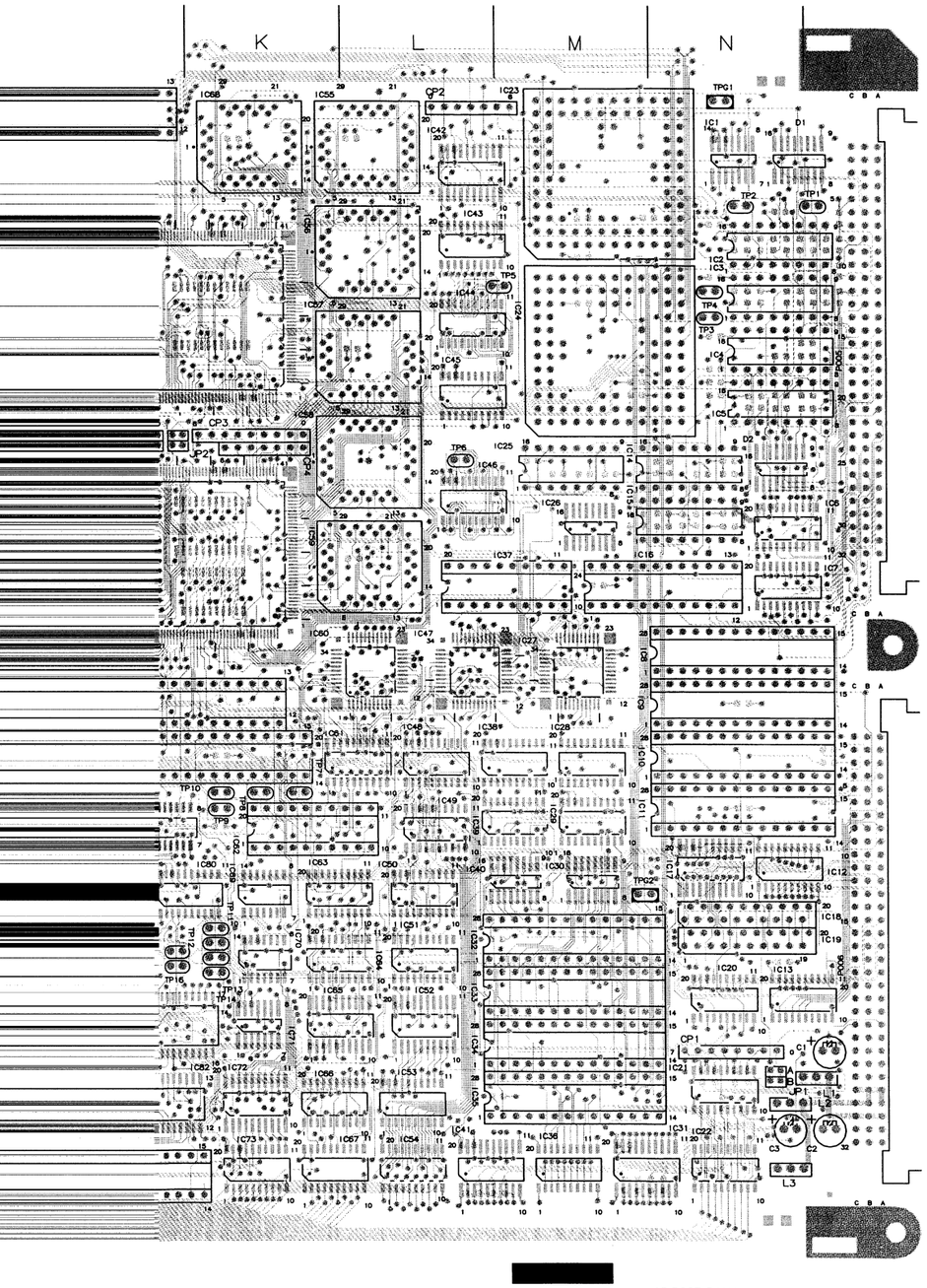
K
L
M
N
TPG1
IC1
D1
TP2
TP1
IC2
IC3
TP4
TP3
IC4
IC5
TP5
IC25
TP6
IC46
IC26
IC16
IC37
IC7
IC8
CP3
JP2
IC60
IC47
IC27
IC48
IC38
IC28
IC10
IC11
IC12
IC18
IC19
IC20
IC13
TP22
TP10
TP9
IC80
IC63
IC50
IC40
IC30
IC31
IC22
IC21
CP1
C1
L1
JP1
L2
C3
C2
L3
TP16
TP13
TP14
IC85
IC52
IC72
IC86
IC53
IC73
IC67
IC54
IC36
IC41
IC42
IC43
IC44
IC45
IC24
IC23
CP2
IC55
IC68
IC56
IC57
IC58
IC59
IC61
IC62
IC64
IC65
IC66
IC70
IC71
IC32
IC33
IC34
IC35
C49
C50
C51
C52
C53
C54
C55
C56
C57
C58
C59
C60
C61
C62
C63
C64
C65
C66
C67
C68
C69
C70
C71
C72
C73
C74
C75
C76
C77
C78
C79
C80
C81
C82
C83
C84
C85
C86
C87
C88
C89
C90
C91
C92
C93
C94
C95
C96
R31
R32
R33
C17
C26
C18
C27
C28
C39
R34
R35
R36
C19
R52
R53
R54
R56
R57
R58
R59
R60
R61
R62
R63
R64
R65
R66
R67
R68
R69
R70
R71
R72
R73
R74
R75
R76
R77
R78
R79
R80
R81
R82
R83
R84
R85
R86
R87
R88
R89
R90
R91
R92
R93
R94
R95
R96
R97
R98
R99
R100
R101
R102
R103
R104
R105
R106
R107
R108
R109
R110
R111
R112
R113
R114
R115
R116
R117
R118
R119
R120
R121
R122
R123
R124
R125
R126
R127
R128
R129
R130
R131
R132
R133
R134
R135
R136
R137
R138
R139
R140
R141
R142
R143
R144
R145
R146
R147
R148
R149
R150
R151
R152
R153
R154
R155
R156
R157
R158
R159
R160
R161
R162
R163
R164
R165
R166
R167
R168
R169
R170
R171
R172
R173
R174
R175
R176
R177
R178
R179
R180
R181
R182
R183
R184
R185
R186
R187
R188
R189
R190
R191
R192
R193
R194
R195
R196
R197
R198
R199
R200
R201
R202
R203
R204
R205
R206
R207
R208
R209
R210
R211
R212
R213
R214
R215
C1
C2
C3
C4
C5
C6
C7
C8
C9
C10
C11
C12
C13
C14
C15
C16
C20
C21
C22
C23
C24
C25
C29
C30
C31
C32
C33
C34
C35
C36
C37
C38
C40
C41
C42
C43
C44
C45
C46
C47
C48
C51
C52
C53
C54
C55
C56
C57
C58
C59
C60
C61
C62
C63
C64
C65
C66
C67
C68
C69
C70
C71
C72
C73
C74
C75
C76
C77
C78
C79
C80
C81
C82
C83
C84
C85
C86
C87
C88
C89
C90
C91
C92
C93
C94
C95
C96
IC77
IC78
IC79
IC80
IC81
IC82
IC83
IC84
IC85
IC86
IC87
IC88
IC89
IC90
IC91
IC92
IC93
IC94
IC95
IC96
IC97
IC98
IC99
IC100
IC101
IC102
IC103
IC104
IC105
IC106
IC107
IC108
IC109
IC110
IC111
IC112
IC113
IC114
IC115
IC116

Effective From
Serial No. D2TMD .....
D2TMC .....

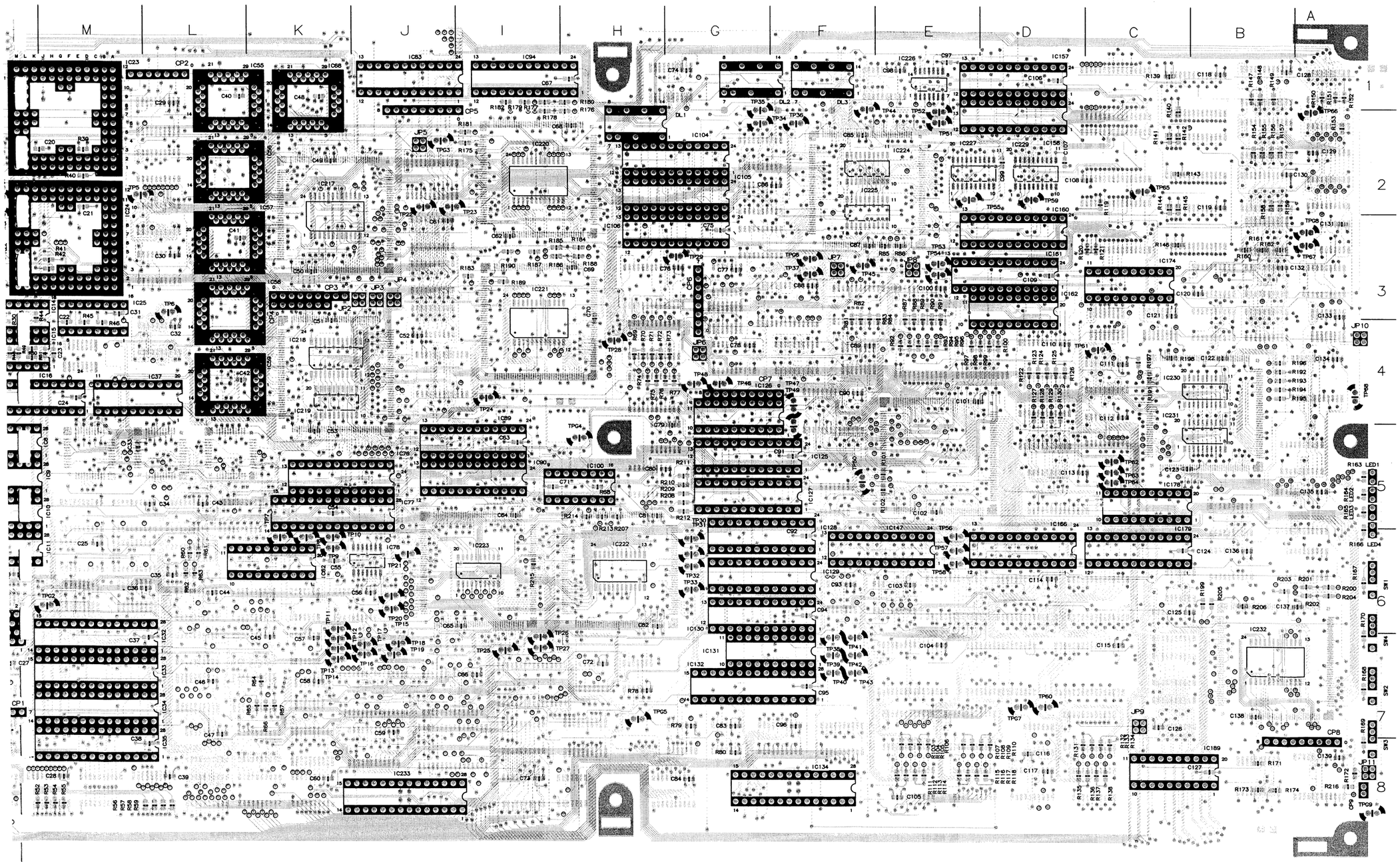

L4 VIDEO PROCESS P.C. BOARD (VEP88071F) [FOR PAL]
(VEP88071E) [FOR NTSC]

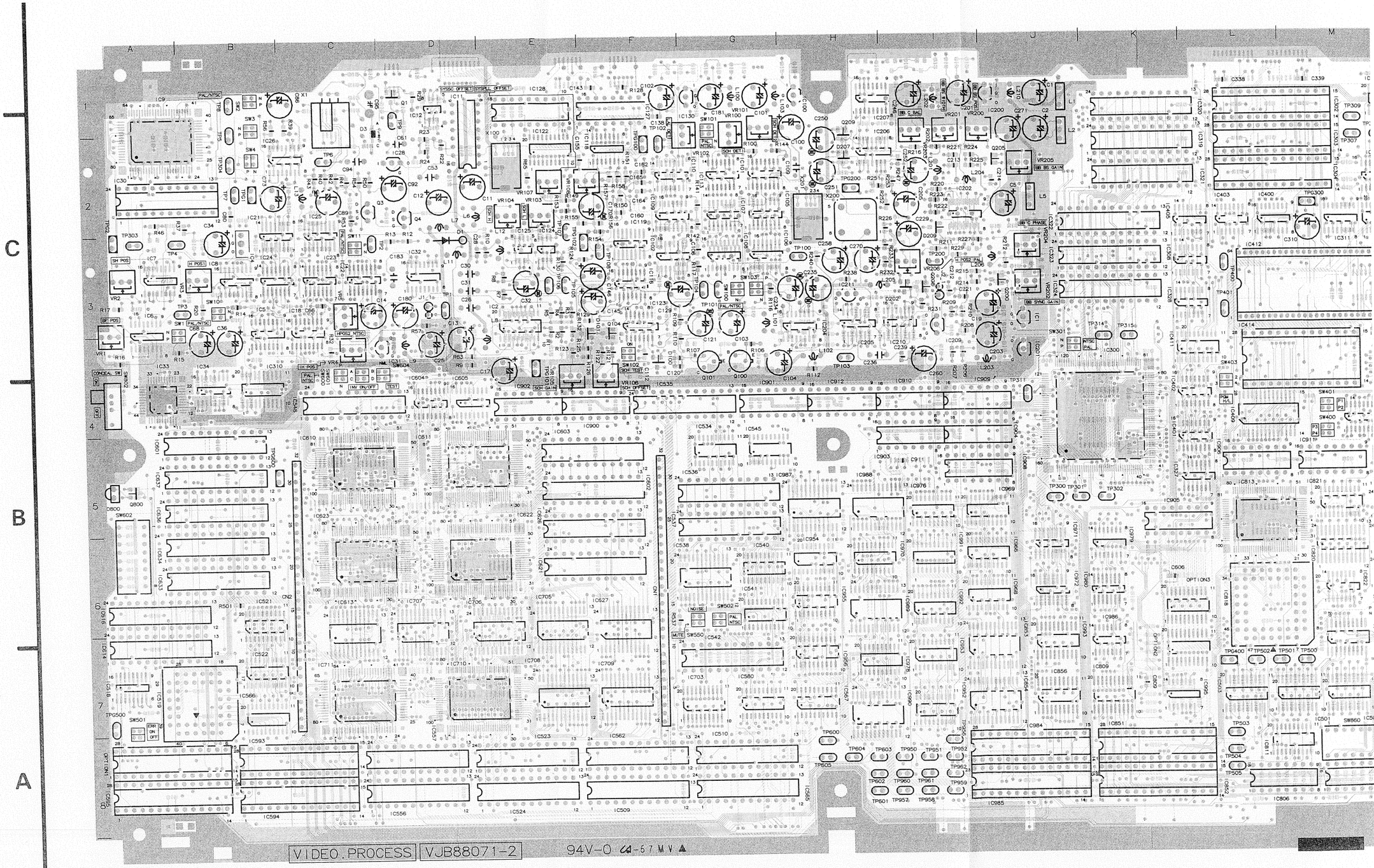

4—3—8

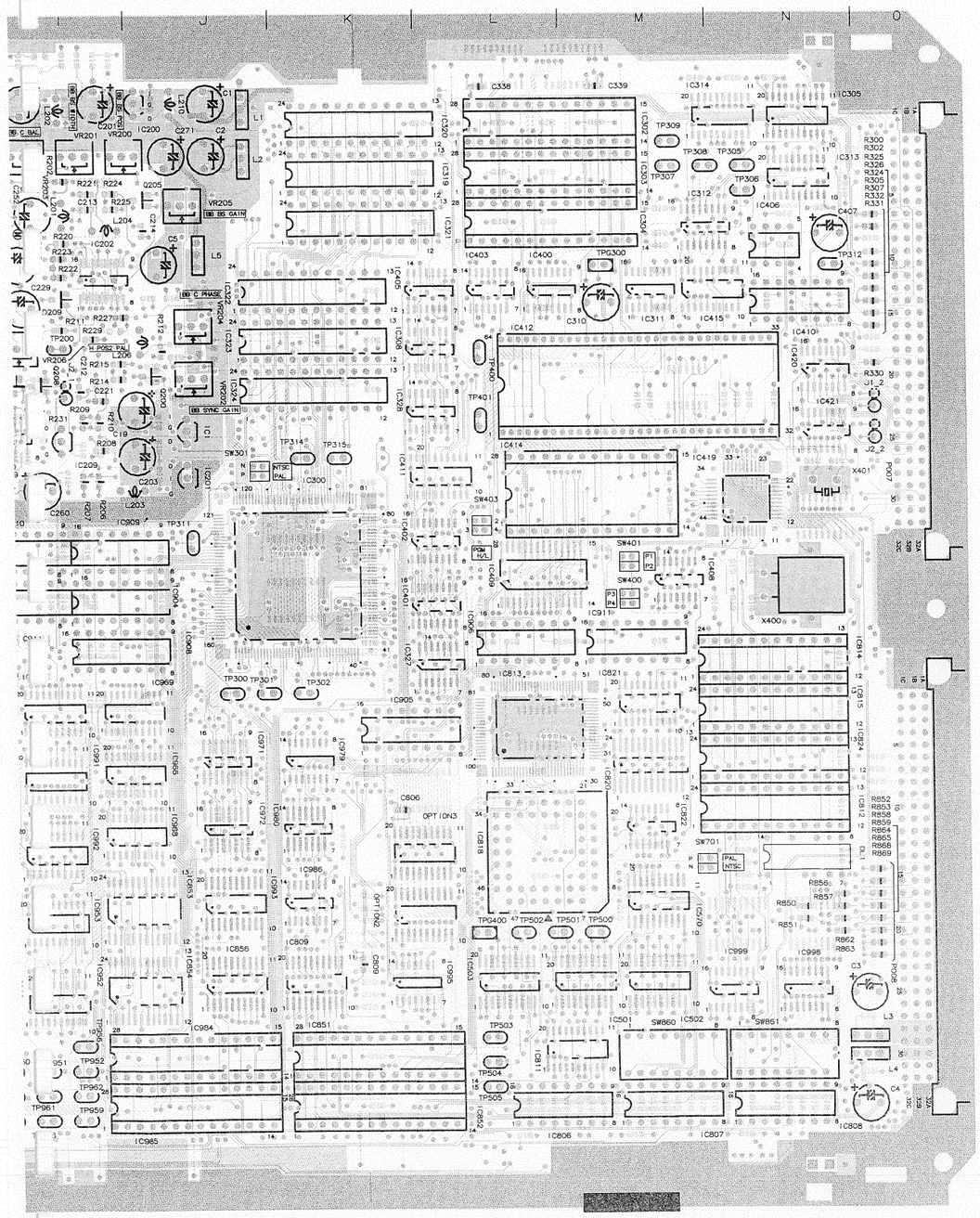

(COMPONENT SIDE)

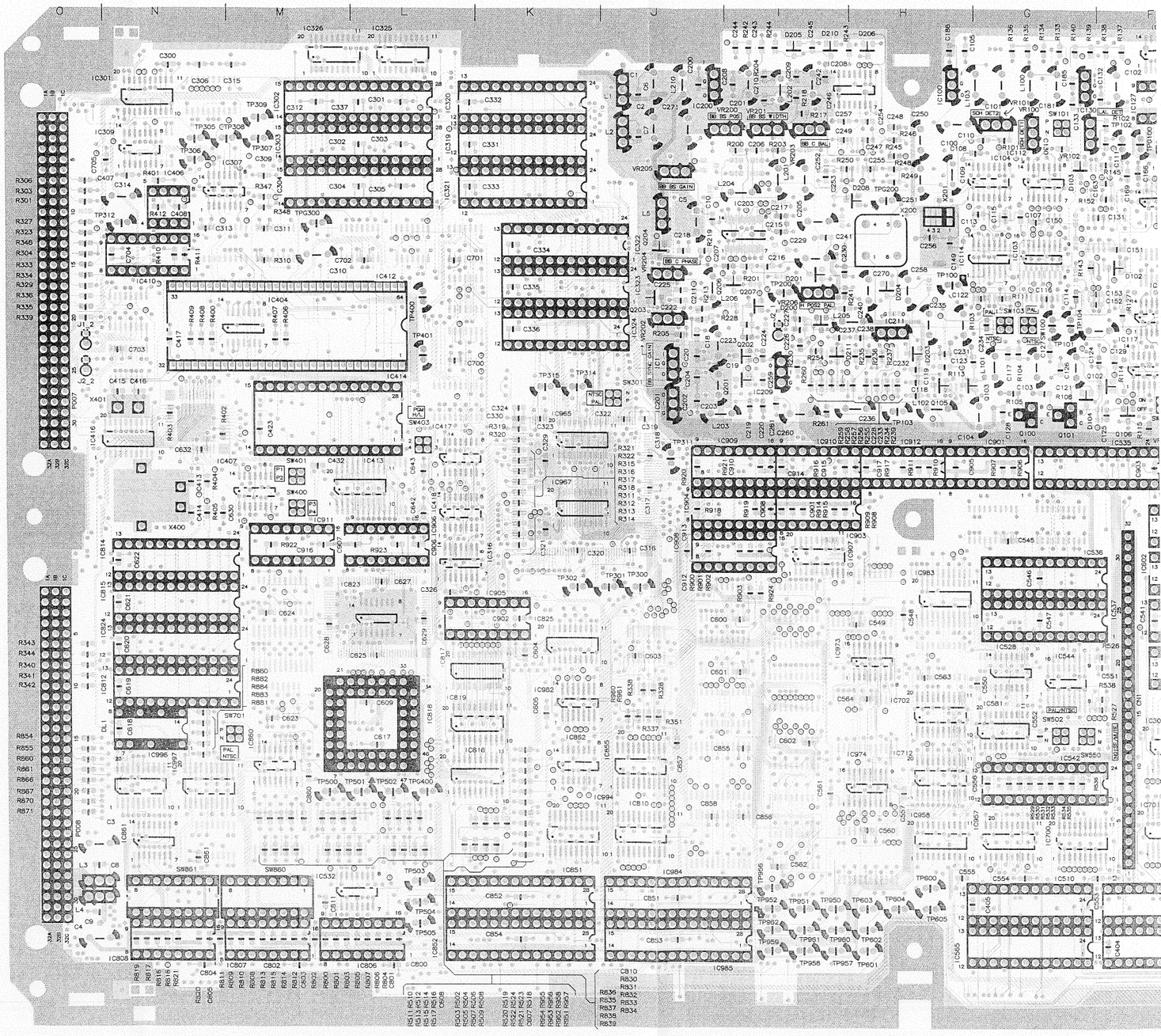

(FOIL SIDE)

Effective From
Serial No. D2TMD .....
D2TMC .....

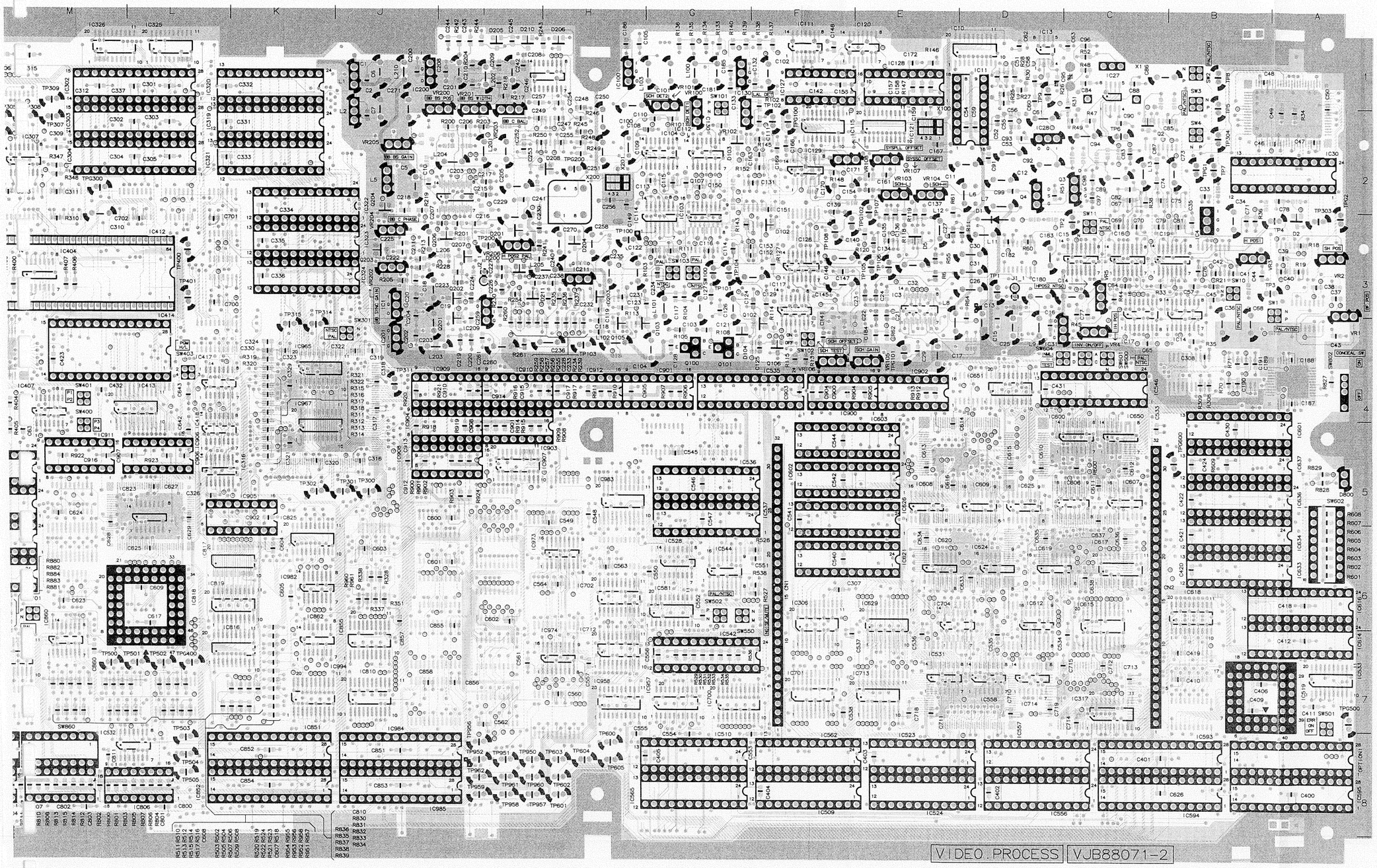

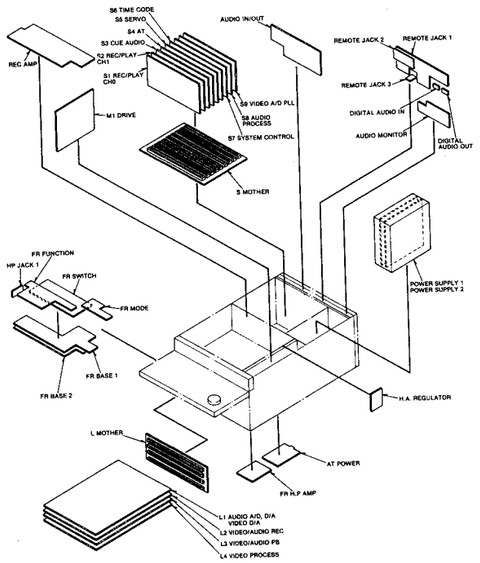

L4 VIDEO PROCESS

Transistors

Q8001	D-2 ©
Q8002	C-11 Ⓕ
Q8003	C-2 ©
Q8003	C-11 Ⓕ
Q8004	C-2 ©
Q8004	C-11 Ⓕ
Q8100	B-3 ©
Q8100	B-10 Ⓕ
Q8101	B-3 ©
Q8101	B-10 Ⓕ
Q8102	C-10 Ⓕ
Q8103	C-9 Ⓕ
Q8104	C-3 ©
Q8105	C-9 Ⓕ
Q8106	B-10 Ⓕ
Q8200	C-4 ©
Q8201	C-9 Ⓕ
Q8202	C-9 Ⓕ
Q8203	C-8 Ⓕ
Q8204	C-8 Ⓕ
Q8205	C-4 ©
Q8206	C-9 Ⓕ
Q8207	C-9 Ⓕ
Q8208	C-4 ©
Q8209	C-4 ©
Q8800	B-1 ©

Integrated Circuits

IC8001	C-4 ©
IC8001	C-8 Ⓕ
IC8002	C-2 ©
IC8003	C-10 Ⓕ
IC8004	C-1 ©
IC8004	C-11 Ⓕ
IC8005	C-1 ©
IC8006	C-1 ©
IC8007	C-1 ©
IC8008	C-1 ©
IC8010	D-10 Ⓕ
IC8011	D-2 ©
IC8011	D-11 Ⓕ
IC8012	C-2 ©
IC8013	D-11 Ⓕ
IC8014	C-11 Ⓕ
IC8015	C-11 Ⓕ
IC8016	C-11 Ⓕ
IC8017	C-11 Ⓕ
IC8018	C-1 ©
IC8019	C-11 Ⓕ
IC8021	C-1 ©
IC8022	C-2 ©
IC8023	C-2 ©
IC8024	C-1 ©
IC8025	C-2 ©
IC8026	C-1 ©
IC8027	C-11 Ⓕ
IC8028	C-11 Ⓕ
IC8030	C-1 ©
IC8030	C-12 Ⓕ
IC8031	C-2 ©
IC8031	C-11 Ⓕ
IC8032	C-2 ©
IC8033	C-1 ©
IC8034	C-1 ©
IC8100	D-3 ©
IC8100	C-9 Ⓕ
IC8101	C-3 ©
IC8102	C-3 ©
IC8103	C-9 Ⓕ
IC8104	C-9 Ⓕ
IC8105	C-3 ©
IC8106	C-3 ©
IC8107	C-3 ©
IC8108	C-3 ©
IC8109	C-3 ©
IC8110	C-3 ©
IC8111	D-10 Ⓕ
IC8112	C-9 Ⓕ
IC8113	C-3 ©
IC8114	C-9 Ⓕ
IC8115	C-10 Ⓕ
IC8116	C-3 ©
IC8117	C-10 Ⓕ
IC8118	C-3 ©
IC8119	C-3 ©
IC8120	D-10 Ⓕ
IC8121	C-10 Ⓕ
IC8122	C-2 ©
IC8123	C-3 ©
IC8124	C-2 ©
IC8125	C-2 ©
IC8126	C-10 Ⓕ
IC8127	C-3 ©
IC8127	C-10 Ⓕ
IC8128	D-2 ©
IC8128	D-10 Ⓕ
IC8129	C-10 Ⓕ
IC8130	C-3 ©
IC8130	C-10 Ⓕ
IC8200	C-4 ©
IC8200	C-9 Ⓕ
IC8201	C-4 ©
IC8201	C-8 Ⓕ
IC8202	C-4 ©
IC8203	C-9 Ⓕ
IC8204	C-3 ©
IC8205	C-4 ©
IC8206	C-4 ©
IC8207	C-4 ©
IC8208	D-9 Ⓕ
IC8209	C-4 ©
IC8209	C-9 Ⓕ
IC8210	C-4 ©
IC8211	C-4 ©
IC8211	C-9 Ⓕ
IC8300	C-5 ©
IC8301	D-7 Ⓕ
IC8302	C-5 ©
IC8302	C-7 Ⓕ
IC8303	C-5 ©
IC8303	C-7 Ⓕ
IC8304	C-5 ©
IC8304	C-7 Ⓕ
IC8305	D-6 ©
IC8306	B-10 Ⓕ
IC8307	C-7 Ⓕ
IC8308	C-5 ©
IC8309	C-7 Ⓕ
IC8310	C-1 ©
IC8311	C-5 ©
IC8312	C-6 ©
IC8313	C-6 ©
IC8314	D-6 ©
IC8316	B-8 Ⓕ
IC8317	A-11 ©
IC8319	C-5 ©
IC8319	C-8 Ⓕ
IC8320	C-5 ©
IC8320	C-8 Ⓕ
IC8321	C-5 ©
IC8321	C-8 Ⓕ
IC8322	C-4 ©
IC8322	C-8 Ⓕ
IC8323	C-4 ©
IC8323	C-8 Ⓕ
IC8324	C-4 ©
IC8324	C-8 Ⓕ
IC8325	D-7 Ⓕ
IC8326	D-7 Ⓕ
IC8327	B-5 ©
IC8328	C-5 ©
IC8400	C-5 ©
IC8401	B-5 ©
IC8402	B-5 ©
IC8403	C-5 ©
IC8404	C-7 Ⓕ
IC8405	C-5 ©
IC8406	C-6 ©
IC8406	C-7 Ⓕ
IC8407	B-7 Ⓕ
IC8408	B-6 ©
IC8409	B-5 ©
IC8410	C-6 ©
IC8410	C-7 Ⓕ
IC8411	C-5 ©
IC8412	C-5 ©
IC8412	C-8 Ⓕ
IC8414	C-5 ©
IC8414	C-8 Ⓕ
IC8415	C-6 ©
IC8416	B-7 Ⓕ
IC8417	B-8 Ⓕ
IC8418	B-8 Ⓕ
IC8419	C-6 ©
IC8420	C-6 ©
IC8421	C-6 ©
IC8501	A-5 ©
IC8502	A-5 ©
IC8503	A-5 ©
IC8509	A-3 ©
IC8509	A-10 Ⓕ
IC8510	A-3 ©
IC8510	A-10 Ⓕ
IC8518	A-1 ©
IC8519	A-1 ©
IC8519	A-12 Ⓕ
IC8521	B-1 ©
IC8522	A-1 ©
IC8523	A-2 ©
IC8523	A-10 Ⓕ
IC8524	A-2 ©
IC8524	A-10 Ⓕ
IC8528	B-2 ©
IC8528	B-9 Ⓕ
IC8531	A-10 Ⓕ
IC8532	A-7 Ⓕ
IC8533	A-12 Ⓕ
IC8534	B-3 ©
IC8535	B-3 ©
IC8535	B-10 Ⓕ
IC8536	B-3 ©
IC8536	B-10 Ⓕ
IC8537	B-3 ©
IC8537	B-10 Ⓕ
IC8538	B-3 ©
IC8540	B-3 ©
IC8541	B-3 ©
IC8542	A-3 ©
IC8542	A-10 Ⓕ
IC8544	B-10 Ⓕ
IC8545	B-3 ©
IC8546	B-1 ©
IC8546	B-11 Ⓕ
IC8555	A-8 Ⓕ
IC8556	A-2 ©
IC8556	A-11 Ⓕ
IC8557	A-2 ©
IC8557	A-11 Ⓕ
IC8558	A-11 Ⓕ
IC8562	A-3 ©
IC8562	A-10 Ⓕ
IC8565	A-3 ©
IC8565	A-9 Ⓕ
IC8566	A-1 ©
IC8567	A-4 ©
IC8570	A-6 ©
IC8580	A-3 ©
IC8581	B-9 Ⓕ
IC8593	A-1 ©
IC8593	A-11 Ⓕ
IC8594	A-1 ©
IC8594	A-11 Ⓕ
IC8595	A-1 ©
IC8595	A-12 Ⓕ
IC8600	B-11 Ⓕ
IC8601	B-1 ©
IC8601	B-12 Ⓕ
IC8602	B-3 ©
IC8602	B-10 Ⓕ
IC8603	B-2 ©
IC8603	B-10 Ⓕ
IC8604	B-2 ©
IC8605	B-2 ©
IC8606	B-11 Ⓕ
IC8607	B-11 Ⓕ
IC8608	B-10 Ⓕ
IC8609	B-11 Ⓕ
IC8610	B-2 ©
IC8611	B-2 ©
IC8612	B-11 Ⓕ
IC8613	B-2 ©
IC8614	A-1 ©
IC8614	A-12 Ⓕ
IC8615	B-11 Ⓕ
IC8616	B-1 ©
IC8616	B-12 Ⓕ
IC8617	B-11 Ⓕ
IC8618	B-11 Ⓕ
IC8619	B-11 ©
IC8620	B-10 Ⓕ
IC8621	B-2 ©
IC8621	B-10 Ⓕ
IC8622	B-2 ©
IC8623	B-2 ©
IC8624	B-11 Ⓕ
IC8625	B-11 Ⓕ
IC8626	B-2 ©
IC8626	B-10 Ⓕ
IC8627	B-3 ©
IC8629	B-10 Ⓕ
IC8633	B-1 ©
IC8633	B-12 Ⓕ
IC8634	B-1 ©
IC8634	B-12 Ⓕ
IC8636	B-1 ©
IC8636	B-12 Ⓕ
IC8637	B-1 ©
IC8637	B-12 Ⓕ
IC8650	B-11 Ⓕ
IC8651	B-11 Ⓕ
IC8700	A-10 Ⓕ
IC8701	A-10 Ⓕ
IC8702	B-9 Ⓕ
IC8703	A-3 ©
IC8704	B-10 Ⓕ
IC8705	B-2 ©
IC8706	B-2 ©
IC8707	B-2 ©
IC8708	A-2 ©
IC8709	A-3 ©
IC8710	A-2 ©
IC8711	A-2 ©
IC8712	A-9 Ⓕ
IC8713	A-10 Ⓕ
IC8714	A-11 Ⓕ
IC8806	A-5 ©
IC8806	A-7 Ⓕ
IC8807	A-6 ©
IC8807	A-7 Ⓕ
IC8808	A-6 ©
IC8808	A-7 Ⓕ
IC8809	A-4 ©
IC8810	A-8 Ⓕ
IC8811	A-5 ©
IC8813	B-5 ©
IC8814	B-6 ©
IC8814	B-7 Ⓕ
IC8815	B-6 ©
IC8815	B-7 Ⓕ
IC8816	A-8 Ⓕ
IC8817	B-8 ©
IC8818	B-5 ©
IC8818	B-8 Ⓕ
IC8819	B-8 Ⓕ
IC8820	B-5 ©
IC8821	B-5 ©
IC8822	B-5 ©
IC8823	B-7 Ⓕ
IC8824	B-6 ©
IC8824	B-7 Ⓕ
IC8825	B-8 Ⓕ
IC8851	A-5 ©
IC8851	A-8 Ⓕ
IC8852	A-5 ©
IC8853	B-4 ©
IC8854	A-4 ©
IC8856	A-4 ©
IC8860	B-7 Ⓕ
IC8861	A-7 Ⓕ
IC8862	B-8 Ⓕ
IC8900	B-3 ©
IC8900	B-10 Ⓕ
IC8901	B-3 ©
IC8901	B-9 Ⓕ
IC8902	B-2 ©
IC8902	B-10 Ⓕ
IC8903	B-4 ©
IC8903	B-9 Ⓕ
IC8904	B-4 ©
IC8904	B-8 Ⓕ
IC8905	B-5 ©
IC8905	B-8 Ⓕ
IC8906	B-5 ©
IC8906	B-8 Ⓕ
IC8907	B-9 Ⓕ
IC8908	B-4 ©
IC8908	B-8 Ⓕ
IC8909	B-4 ©
IC8909	B-9 Ⓕ
IC8910	B-4 ©
IC8910	B-9 Ⓕ
IC8911	B-5 ©
IC8911	B-7 Ⓕ
IC8912	B-4 ©
IC8912	B-9 Ⓕ
IC8952	A-4 ©
IC8953	A-4 ©
IC8954	B-3 ©
IC8955	B-4 ©
IC8956	A-3 ©
IC8957	A-9 Ⓕ
IC8958	A-9 Ⓕ
IC8965	C-8 Ⓕ
IC8966	B-4 ©
IC8967	B-8 Ⓕ
IC8968	B-4 ©
IC8969	B-4 ©
IC8970	B-4 ©
IC8971	B-4 ©
IC8972	B-4 ©
IC8973	B-9 Ⓕ
IC8974	A-9 Ⓕ
IC8976	B-4 ©
IC8978	A-4 ©
IC8979	B-5 ©
IC8980	B-4 ©
IC8982	B-8 Ⓕ
IC8983	B-9 Ⓕ
IC8984	A-4 ©
IC8984	A-8 Ⓕ
IC8985	A-4 ©
IC8985	A-9 Ⓕ
IC8986	B-5 ©
IC8987	B-3 ©
IC8988	B-4 ©
IC8989	B-4 ©
IC8990	A-4 ©
IC8991	B-4 ©
IC8992	B-4 ©
IC8993	B-4 ©
IC8994	A-8 Ⓕ
IC8995	A-5 ©
IC8996	A-7 Ⓕ
IC8997	A-7 Ⓕ
IC8998	A-6 ©
IC8999	A-6 ©

Test Points

TP8001	C-2 ©
IC8001	C-11 Ⓕ
TP8002	C-2 ©
TP8002	C-11 Ⓕ
TP8003	C-1 ©
TP8003	C-12 Ⓕ
TP8004	C-1 ©
TP8004	C-12 Ⓕ
TP8005	C-1 ©
TP8005	C-11 Ⓕ
TP8006	C-2 ©
TP8006	C-11 Ⓕ
TP8007	C-1 ©
TP8007	C-11 Ⓕ
TP8008	D-1 ©
TP8008	C-11 Ⓕ
TP8009	C-2 ©
TP8009	C-11 Ⓕ
TP8100	C-3 ©
TP8100	C-9 Ⓕ
TP8101	C-3 ©
TP8101	C-10 Ⓕ
TP8102	C-3 ©
TP8102	C-10 Ⓕ
TP8103	C-4 ©
TP8103	C-9 Ⓕ
IC8106	C-10 Ⓕ
TP8107	C-2 ©
TP8107	C-10 Ⓕ
TP8108	C-3 ©
TP8108	C-10 Ⓕ
TP8200	C-4 ©
TP8200	C-9 Ⓕ
TP8300	B-4 ©
TP8300	B-8 Ⓕ
TP8301	B-4 ©
TP8301	B-8 Ⓕ
TP8302	B-5 ©
TP8302	B-8 Ⓕ
TP8303	C-1 ©
TP8303	C-12 Ⓕ
TP8304	C-1 ©
TP8304	C-11 Ⓕ
TP8305	C-6 ©
TP8305	C-7 Ⓕ
TP8306	C-6 ©
TP8306	C-7 Ⓕ
TP8307	C-5 ©
TP8307	C-7 Ⓕ
TP8308	C-6 ©
TP8308	C-7 Ⓕ
TP8309	C-5 ©
TP8309	C-7 Ⓕ
TP8311	B-4 ©
TP8311	B-8 Ⓕ
TP8312	C-6 ©
TP8312	C-7 Ⓕ
TP8314	C-4 ©
TP8314	C-8 Ⓕ
TP8315	C-5 ©
TP8315	C-8 Ⓕ
TP8400	C-5 ©
TP8400	C-8 Ⓕ
TP8401	C-5 ©
TP8401	C-8 Ⓕ
TP8500	A-5 ©
TP8500	A-7 Ⓕ
TP8501	A-5 ©
TP8501	A-7 Ⓕ
TP8502	A-5 ©
TP8502	A-8 Ⓕ
TP8503	A-5 ©
TP8503	A-8 Ⓕ
TP8504	A-5 ©
TP8504	A-8 Ⓕ
TP8505	A-5 ©
TP8505	A-8 Ⓕ
TP8600	A-3 ©
TP8600	A-9 Ⓕ
TP8601	A-4 ©
TP8601	A-9 Ⓕ
TP8602	A-4 ©
TP8602	A-9 Ⓕ
TP8603	A-4 ©
TP8603	A-9 Ⓕ
TP8604	A-4 ©
TP8604	A-9 Ⓕ
TP8605	A-3 ©
TP8605	A-9 Ⓕ
TP8950	A-4 ©
TP8950	A-9 Ⓕ
TP8951	A-4 ©
TP8951	A-9 Ⓕ
TP8952	A-4 ©
TP8952	A-9 Ⓕ
TP8956	A-4 ©
TP8956	A-9 Ⓕ
TP8957	A-4 ©
TP8957	A-9 Ⓕ
TP8958	A-4 ©
TP8958	A-9 Ⓕ
TP8959	A-4 ©
TP8959	A-9 Ⓕ
TP8960	A-4 ©
TP8960	A-9 Ⓕ
TP8961	A-4 ©
TP8961	A-9 Ⓕ
TP8962	A-4 ©
TP8962	A-9 Ⓕ
TPG8001	C-1 ©
TPG8001	C-11 Ⓕ
TPG8002	C-1 ©
TPG8002	C-12 Ⓕ
TPG8100	C-3 ©
TPG8100	C-10 Ⓕ
TPG8101	C-2 ©
TPG8101	B-10 Ⓕ
TPG8102	C-3 ©
TPG8102	C-10 Ⓕ
TPG8200	C-4 ©
TPG8200	C-9 Ⓕ
TPG8300	C-5 ©
TPG8300	C-7 Ⓕ
TPG8400	A-5 ©
TPG8400	A-8 Ⓕ
TPG8500	A-1 ©
TPG8500	A-12 Ⓕ
TPG8600	B-1 ©
TPG8600	B-11 Ⓕ

Connectors

P8007	C-6 ©
P8007	C-7 Ⓕ
P8008	A-6 ©
P8008	A-7 Ⓕ

Switches

SW8001	C-1 ©
SW8001	C-12 Ⓕ
SW8002	D-1 ©
SW8002	C-11 Ⓕ
SW8003	C-1 ©
SW8003	C-11 Ⓕ
SW8004	C-1 ©
SW8004	C-11 Ⓕ
SW8010	C-1 ©
SW8010	C-11 Ⓕ
SW8011	C-2 ©
SW8011	C-11 Ⓕ
SW8100	C-3 ©
SW8100	C-10 Ⓕ
SW8101	C-3 ©
SW8101	C-10 Ⓕ
SW8102	C-3 ©
SW8102	C-10 Ⓕ
SW8103	C-3 ©
SW8103	C-9 Ⓕ
SW8301	C-4 ©
SW8301	C-8 Ⓕ
SW8400	B-5 ©
SW8400	B-7 Ⓕ
SW8401	C-4 ©
SW8401	B-7 Ⓕ
SW8403	C-5 ©
SW8403	C-8 Ⓕ
SW8501	A-1 ©
SW8501	A-12 Ⓕ
SW8502	B-3 ©
SW8502	B-10 Ⓕ
SW8550	A-3 ©
SW8550	A-10 Ⓕ
SW8600	C-2 ©
SW8600	B-11 Ⓕ
SW8601	C-2 ©
SW8601	B-11 Ⓕ
SW8602	B-1 ©
SW8602	B-12 Ⓕ
SW8604	C-2 ©
SW8604	C-11 Ⓕ
SW8701	B-6 ©
SW8701	B-7 Ⓕ
SW8802	B-1 ©
SW8802	B-12 Ⓕ
SW8860	A-5 ©
SW8860	A-7 Ⓕ
SW8861	A-6 ©
SW8861	A-7 Ⓕ

ADDRESS INFORMATION
© ... COMPONENT SIDE
Ⓕ ... FOIL SIDE

4—3—9

L4 VIDEO PROCESS SUB P.C. BOARD (VEP88090A)

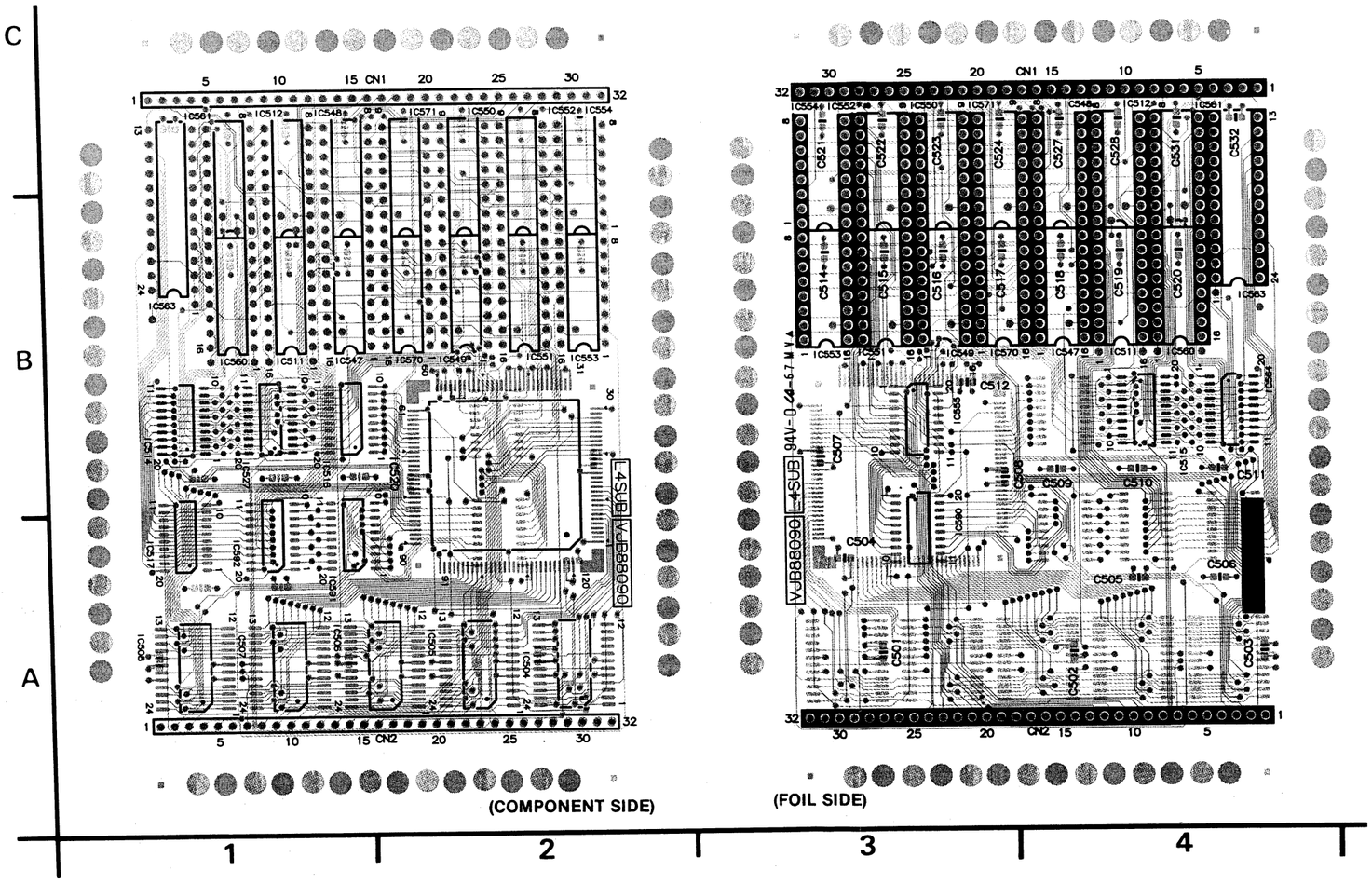

L4 VIDEO PROCESS SUB		
Integrated Circuits		
IC504	A-2	©
IC505	A-2	©
IC506	A-2	©
IC507	A-1	©
IC508	A-1	©
IC511	B-1	©
IC512	C-1	©
IC514	B-1	©
IC515	B-4	Ⓕ
IC516	B-1	©
IC517	A-1	©
IC520	B-2	©
IC527	B-1	©
IC547	B-1	©
IC548	C-1	©
IC549	B-2	©
IC550	C-2	©
IC551	B-2	©
IC552	C-2	©
IC553	B-2	©
IC554	C-2	©
IC555	B-3	Ⓕ
IC560	B-1	©
IC561	C-1	©
IC563	B-1	©
IC564	B-4	Ⓕ
IC570	B-2	©
IC571	C-2	©
IC590	A-3	Ⓕ
IC591	A-1	©
IC592	A-1	©

ADDRESS INFORMATION
© ... COMPONENT SIDE
Ⓕ ... FOIL SIDE

4—3—10

S1 EQUALIZER CH0 P.C. BOARD (VEP85021C) [FOR PAL]
(VEP85021A) [FOR NTSC]

S2 EQUALIZER CH1 P.C. BOARD (VEP85021D) [FOR PAL]
(VEP85021B) [FOR NTSC]

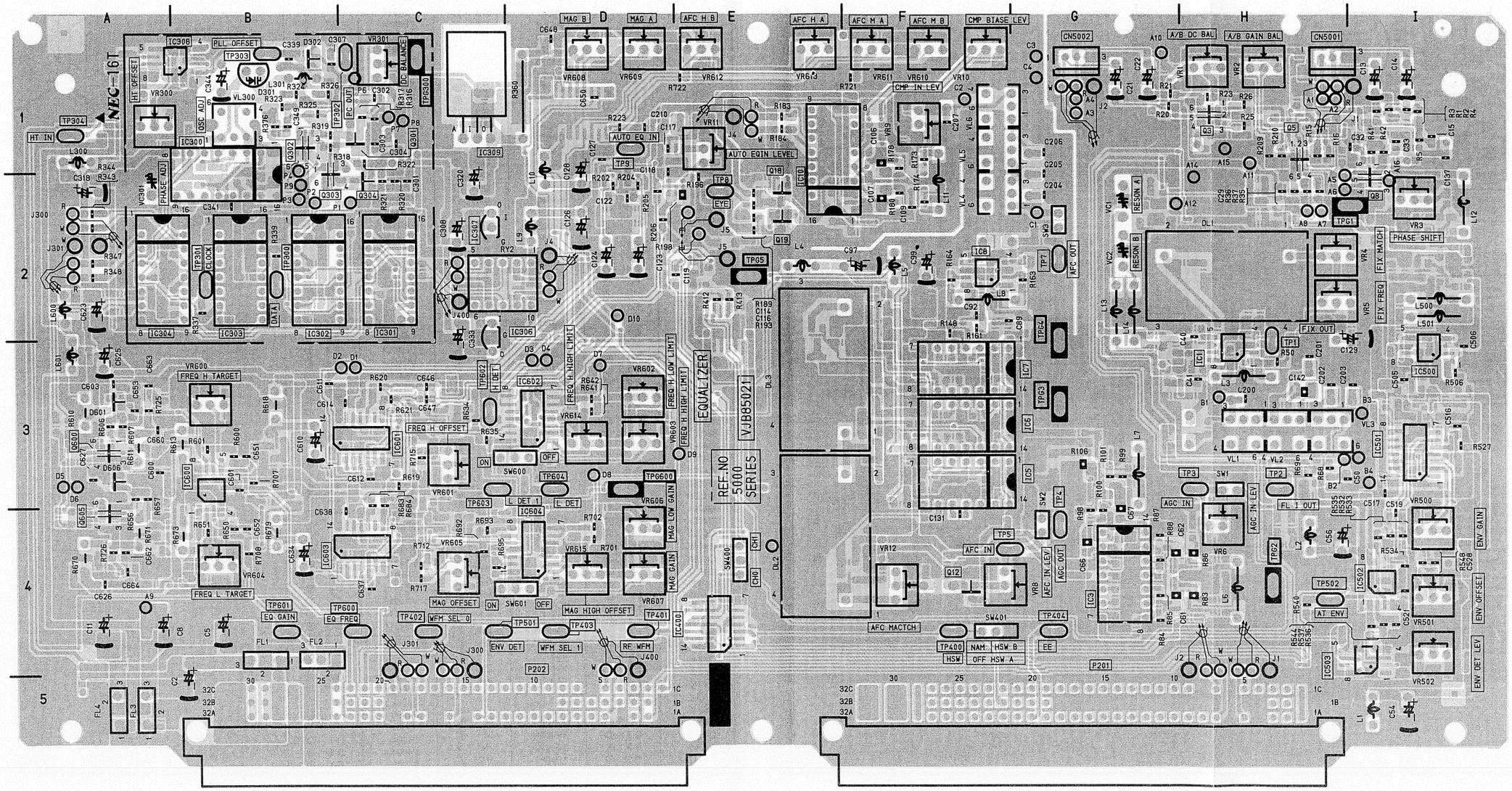

(COMPONENT SIDE)

(FOIL

S1 EQUALIZER CH0 P.C. BOARD (VEP85021C) [FOR PAL]
(VEP85021A) [FOR NTSC]

S2 EQUALIZER CH1 P.C. BOARD (VEP85021D) [FOR PAL]
(VEP85021B) [FOR NTSC]

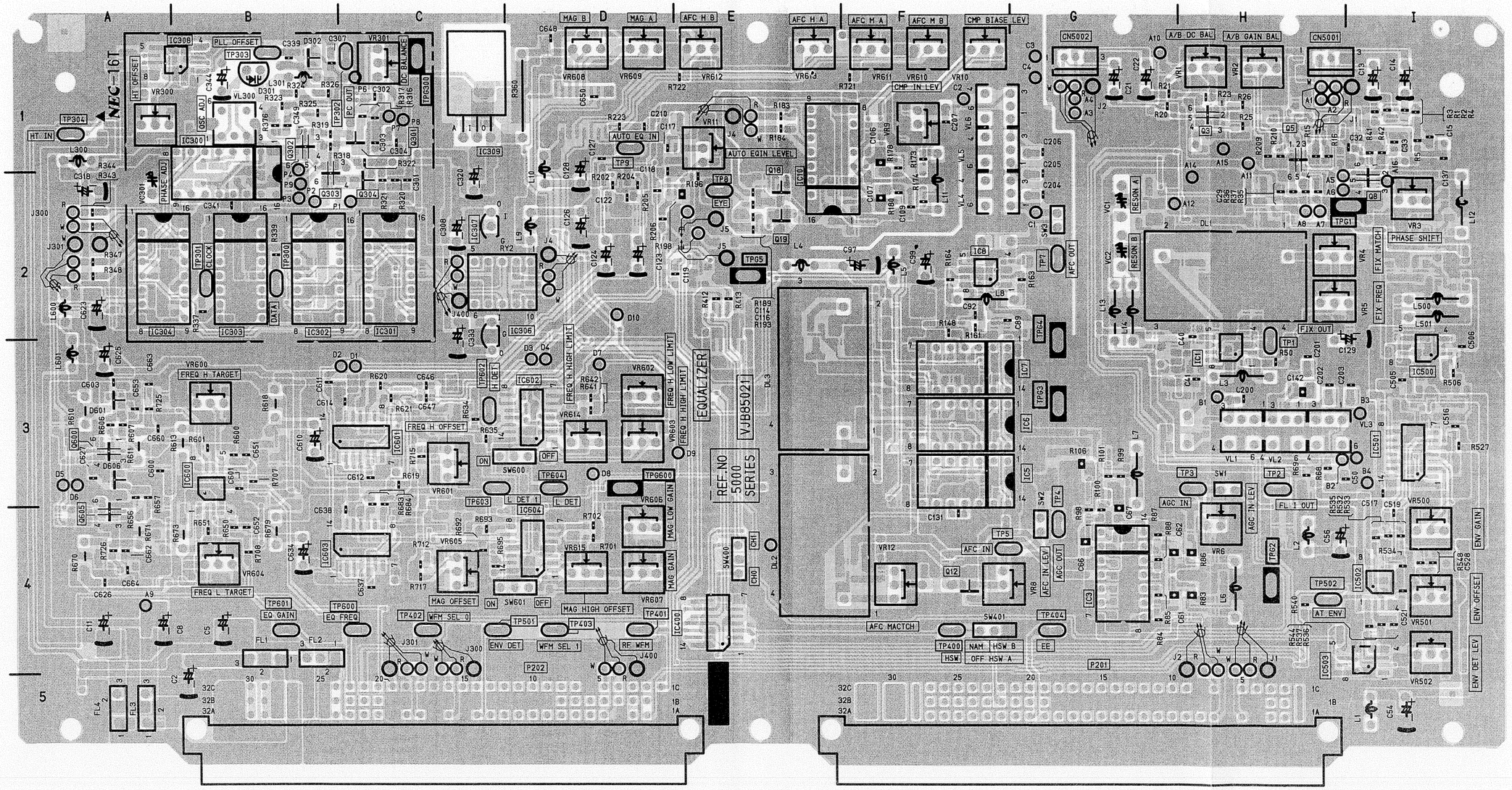

(COMPONENT SIDE)

(FOIL

L]
SC]

S1, S2 EQUALIZER SUB P.C. BOARD (VEP87002A)

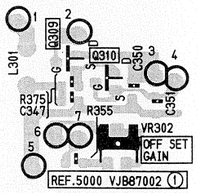

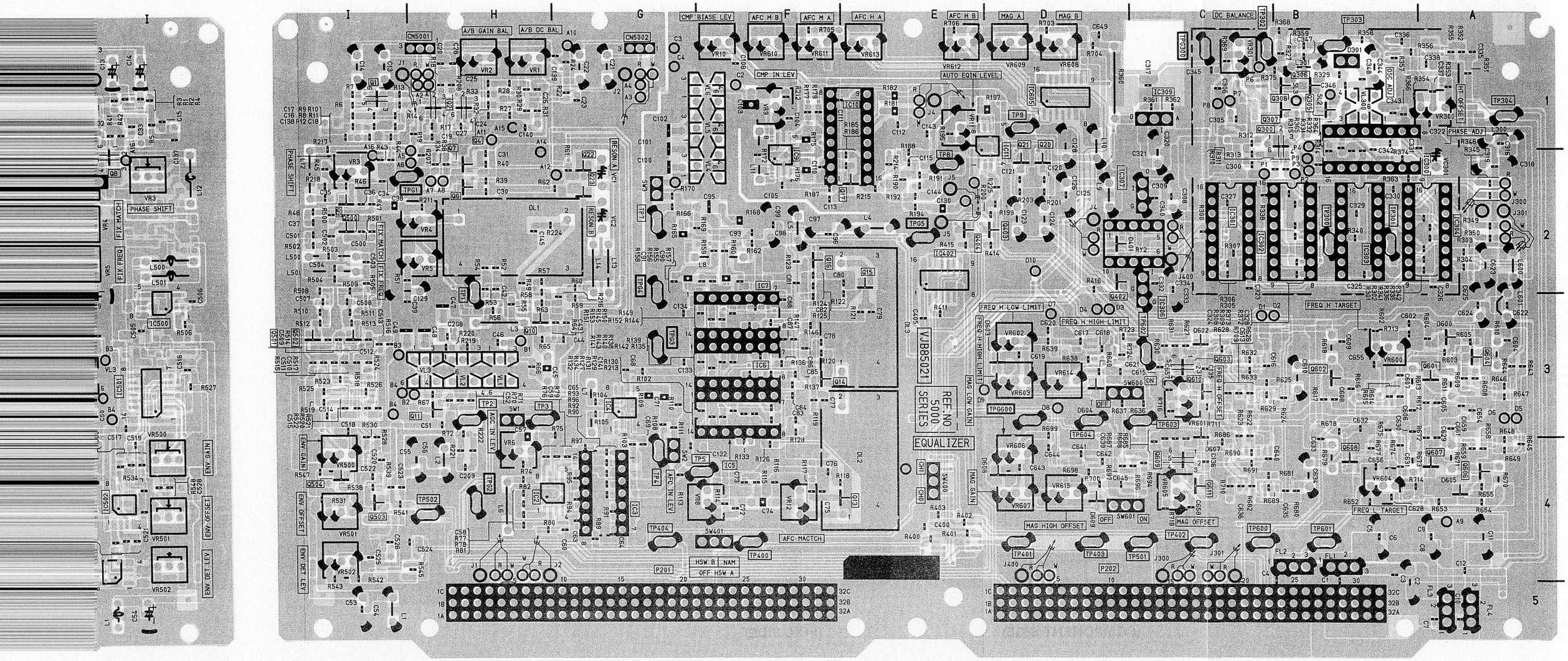

NENT SIDE)

(FOIL SIDE)

S1, S2 EQUALIZER SUB P.C. BOARD (VEP87002A)

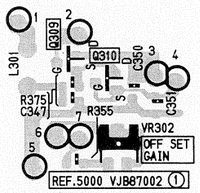

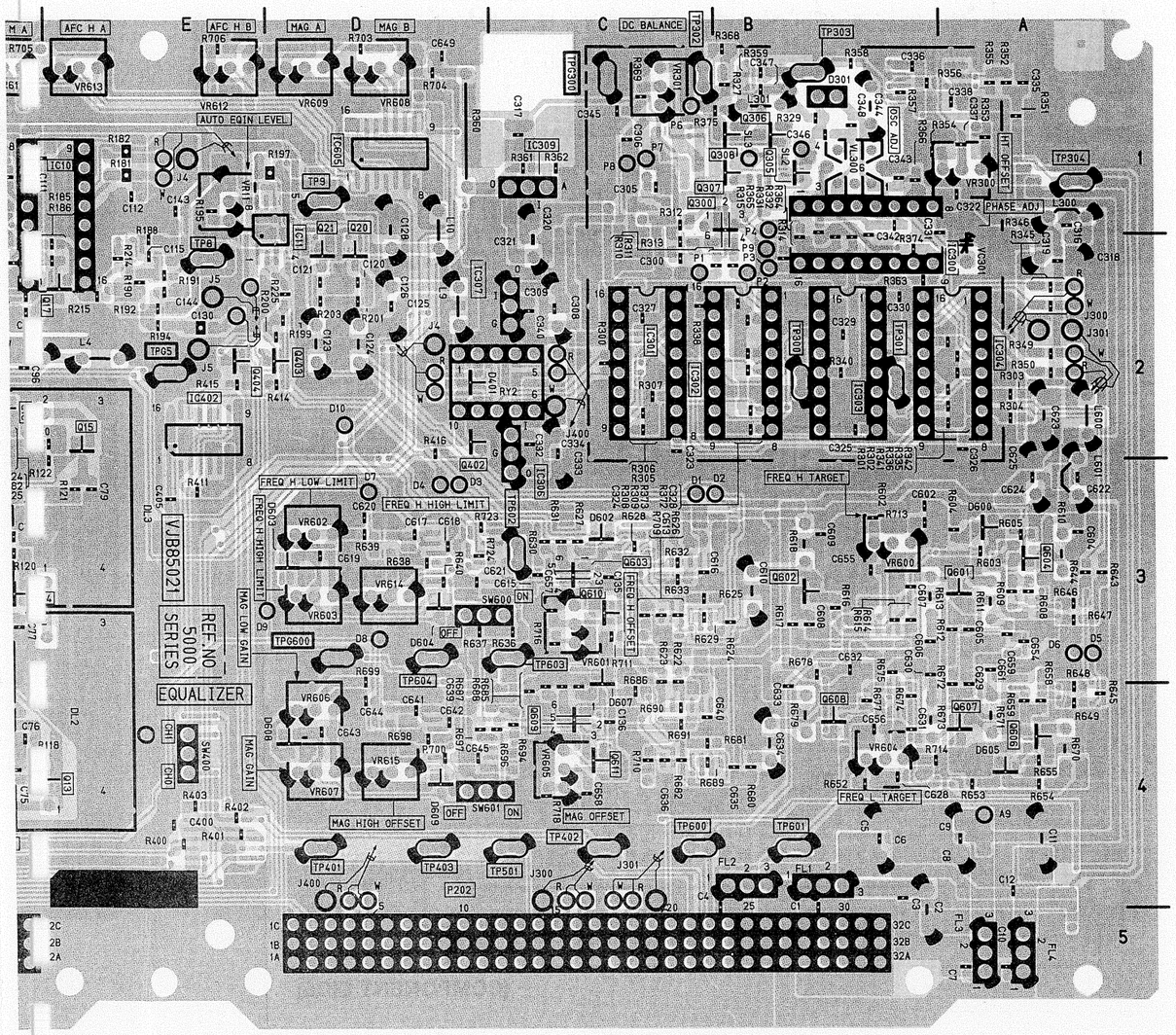

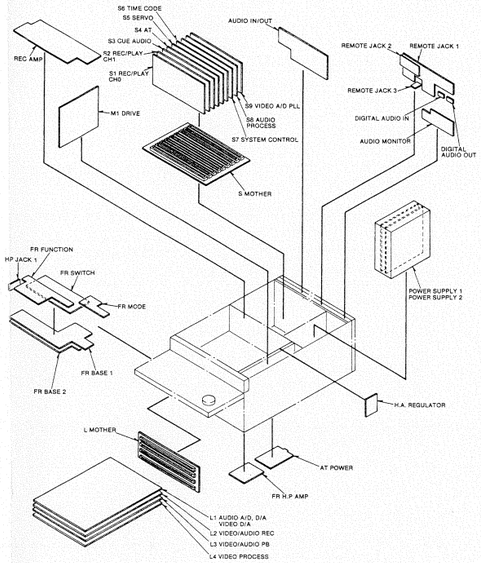

S2 REC/PLAY CH

Transistors

Q5001	I-1	Ⓕ
Q5002	H-1	Ⓕ
Q5003	H-1	Ⓒ
Q5004	H-1	Ⓕ
Q5005	H-1	Ⓒ
Q5006	H-2	Ⓕ
Q5007	H-2	Ⓕ
Q5008	I-2	Ⓒ
Q5009	I-2	Ⓕ
Q5010	H-3	Ⓕ
Q5011	H-3	Ⓕ
Q5012	F-4	Ⓒ
Q5013	E-4	Ⓕ
Q5014	E-3	Ⓕ
Q5015	E-2	Ⓕ
Q5016	F-2	Ⓕ
Q5017	F-2	Ⓕ
Q5018	E-2	Ⓒ
Q5019	E-2	Ⓒ
Q5020	D-2	Ⓕ
Q5021	D-2	Ⓕ
Q5022	G-2	Ⓕ
Q5023	G-2	Ⓕ
Q5300	B-1	Ⓕ
Q5301	C-1	Ⓒ
Q5302	B-1	Ⓒ
Q5303	B-2	Ⓒ
Q5304	C-2	Ⓒ
Q5305	B-1	Ⓕ
Q5306	B-1	Ⓕ
Q5307	B-1	Ⓕ
Q5308	B-1	Ⓕ
Q5402	C-2	Ⓕ
Q5403	D-2	Ⓕ
Q5404	D-2	Ⓕ
Q5500	I-2	Ⓕ
Q5501	I-3	Ⓕ
Q5502	I-3	Ⓕ
Q5503	I-4	Ⓕ
Q5504	I-4	Ⓕ
Q5600	A-3	Ⓒ
Q5601	A-3	Ⓕ
Q5602	B-3	Ⓕ
Q5603	C-3	Ⓕ
Q5604	A-3	Ⓕ
Q5605	A-4	Ⓒ
Q5606	A-4	Ⓕ
Q5607	A-4	Ⓕ
Q5608	B-4	Ⓕ
Q5609	C-4	Ⓕ
Q5610	C-3	Ⓕ
Q5611	C-4	Ⓕ

Integrated Circuits

IC5001	H-3	Ⓒ
IC5002	H-4	Ⓕ
IC5003	G-4	Ⓒ
IC5004	G-4	Ⓕ
IC5005	G-4	Ⓒ
IC5006	G-3	Ⓒ
IC5007	G-3	Ⓒ
IC5008	F-2	Ⓒ
IC5009	F-2	Ⓕ
IC5010	E-2	Ⓒ
IC5011	D-2	Ⓕ
IC5300	B-1	Ⓒ
IC5301	C-2	Ⓒ
IC5302	B-2	Ⓒ
IC5303	B-2	Ⓒ
IC5304	A-2	Ⓒ
IC5306	C-2	Ⓒ
IC5307	C-2	Ⓒ
IC5308	A-1	Ⓒ
IC5309	C-1	Ⓒ
IC5400	D-4	Ⓒ
IC5402	E-2	Ⓕ
IC5500	I-3	Ⓒ
IC5501	I-3	Ⓒ
IC5502	I-4	Ⓒ
IC5503	H-5	Ⓒ
IC5600	B-3	Ⓒ
IC5601	C-3	Ⓒ
IC5602	D-3	Ⓒ
IC5603	C-4	Ⓒ
IC5604	D-4	Ⓒ
IC5605	D-1	Ⓕ

Test Points

TP5001	H-3	Ⓒ
TP5001	H-3	Ⓕ
TP5002	H-3	Ⓒ
TP5002	H-3	Ⓕ
TP5003	H-3	Ⓒ
TP5003	H-3	Ⓕ
TP5004	G-3	Ⓒ
TP5004	G-3	Ⓕ
TP5005	F-4	Ⓒ
TP5005	F-4	Ⓕ
TP5007	G-2	Ⓒ
TP5007	G-2	Ⓕ
TP5008	E-2	Ⓒ
TP5008	E-2	Ⓕ
TP5009	D-1	Ⓒ
TP5009	D-1	Ⓕ
TP5300	B-2	Ⓒ
TP5300	B-2	Ⓕ
TP5301	B-2	Ⓒ
TP5301	B-2	Ⓕ
TP5302	B-1	Ⓒ
TP5302	B-1	Ⓕ
TP5303	B-1	Ⓒ
TP5303	B-1	Ⓕ
TP5304	A-1	Ⓒ
TP5304	A-1	Ⓕ
TP5400	F-4	Ⓒ
TP5400	F-4	Ⓕ
TP5401	D-4	Ⓒ
TP5401	D-4	Ⓕ
TP5402	C-4	Ⓒ
TP5402	C-4	Ⓕ
TP5403	D-4	Ⓒ
TP5403	D-4	Ⓕ
TP5404	G-4	Ⓒ
TP5404	G-4	Ⓕ
TP5501	C-4	Ⓒ
TP5501	C-4	Ⓕ
TP5502	H-4	Ⓒ
TP5502	H-4	Ⓕ
TP5600	C-4	Ⓒ
TP5600	C-4	Ⓕ
TP5601	B-4	Ⓒ
TP5601	B-4	Ⓕ
TP5602	C-3	Ⓒ
TP5602	C-3	Ⓕ
TP5603	C-3	Ⓒ
TP5603	C-3	Ⓕ
TP5604	D-3	Ⓒ
TP5604	D-3	Ⓕ
TPG5001	H-2	Ⓒ
TPG5001	H-2	Ⓕ
TPG5002	H-4	Ⓒ
TPG5002	H-4	Ⓕ
TPG5003	G-3	Ⓒ
TPG5003	G-3	Ⓕ
TPG5004	G-3	Ⓒ
TPG5004	G-3	Ⓕ
TPG5005	E-2	Ⓒ
TPG5005	E-2	Ⓕ
TPG5300	C-1	Ⓒ
TPG5300	C-1	Ⓕ
TPG5600	D-3	Ⓒ
TPG5600	D-3	Ⓕ

Adjustments

VC5001	G-2	Ⓒ
VC5001	G-2	Ⓕ
VC5002	G-2	Ⓒ
VC5002	G-2	Ⓕ
VC5301	A-2	Ⓒ
VC5301	A-2	Ⓕ
VL5001	H-3	Ⓕ
VL5002	H-3	Ⓒ
VL5002	H-3	Ⓕ
VL5003	H-3	Ⓕ
VL5004	F-2	Ⓒ
VL5004	F-2	Ⓕ
VL5005	F-1	Ⓒ
VL5005	F-1	Ⓕ
VL5006	F-1	Ⓒ
VL5006	F-1	Ⓕ
VL5300	B-1	Ⓒ
VL5300	B-1	Ⓕ
VR5001	H-1	Ⓒ
VR5001	H-1	Ⓕ
VR5002	H-1	Ⓒ
VR5002	H-1	Ⓕ
VR5003	I-2	Ⓒ
VR5003	I-2	Ⓕ
VR5004	I-2	Ⓒ
VR5004	I-2	Ⓕ
VR5005	I-2	Ⓒ
VR5005	I-2	Ⓕ
VR5006	H-4	Ⓒ
VR5006	H-4	Ⓒ
VR5008	F-4	Ⓒ
VR5008	F-4	Ⓕ
VR5009	F-1	Ⓒ
VR5009	F-1	Ⓕ
VR5010	F-1	Ⓒ
VR5010	F-1	Ⓕ
VR5011	E-1	Ⓒ
VR5011	E-1	Ⓕ
VR5012	F-4	Ⓒ
VR5012	F-4	Ⓕ
VR5300	A-1	Ⓒ
VR5300	A-1	Ⓕ
VR5301	C-1	Ⓒ
VR5301	C-1	Ⓕ
VR5500	I-4	Ⓒ
VR5500	I-4	Ⓕ
VR5501	I-4	Ⓒ
VR5501	I-4	Ⓕ
VR5600	B-3	Ⓒ
VR5600	B-3	Ⓕ
VR5601	C-3	Ⓒ
VR5601	C-3	Ⓕ
VR5602	D-3	Ⓒ
VR5602	D-3	Ⓕ
VR5603	D-3	Ⓒ
VR5603	D-3	Ⓕ
VR5604	B-4	Ⓒ
VR5604	B-4	Ⓕ
VR5605	C-4	Ⓒ
VR5605	C-4	Ⓕ
VR5606	D-4	Ⓒ
VR5606	D-4	Ⓕ
VR5607	D-4	Ⓒ
VR5607	D-4	Ⓕ
VR5608	D-1	Ⓒ
VR5608	D-1	Ⓕ
VR5609	D-1	Ⓒ
VR5609	D-1	Ⓕ
VR5610	F-1	Ⓒ
VR5610	F-1	Ⓕ
VR5611	F-1	Ⓒ
VR5611	F-1	Ⓕ
VR5612	E-1	Ⓒ
VR5612	E-1	Ⓕ
VR5613	E-1	Ⓒ
VR5613	E-1	Ⓕ
VR5614	D-3	Ⓒ
VR5614	D-3	Ⓕ
VR5615	D-4	Ⓒ
VR5615	D-4	Ⓕ

Connectors

P5201	G-5	Ⓒ
P5201	G-5	Ⓕ
P5202	D-5	Ⓒ
P5202	D-5	Ⓕ

ADDRESS INFORMATION
Ⓒ... COMPONENT SIDE
Ⓕ... FOIL SIDE

S3 CUE AUDIO P.C. BOARD (VEP84107A)

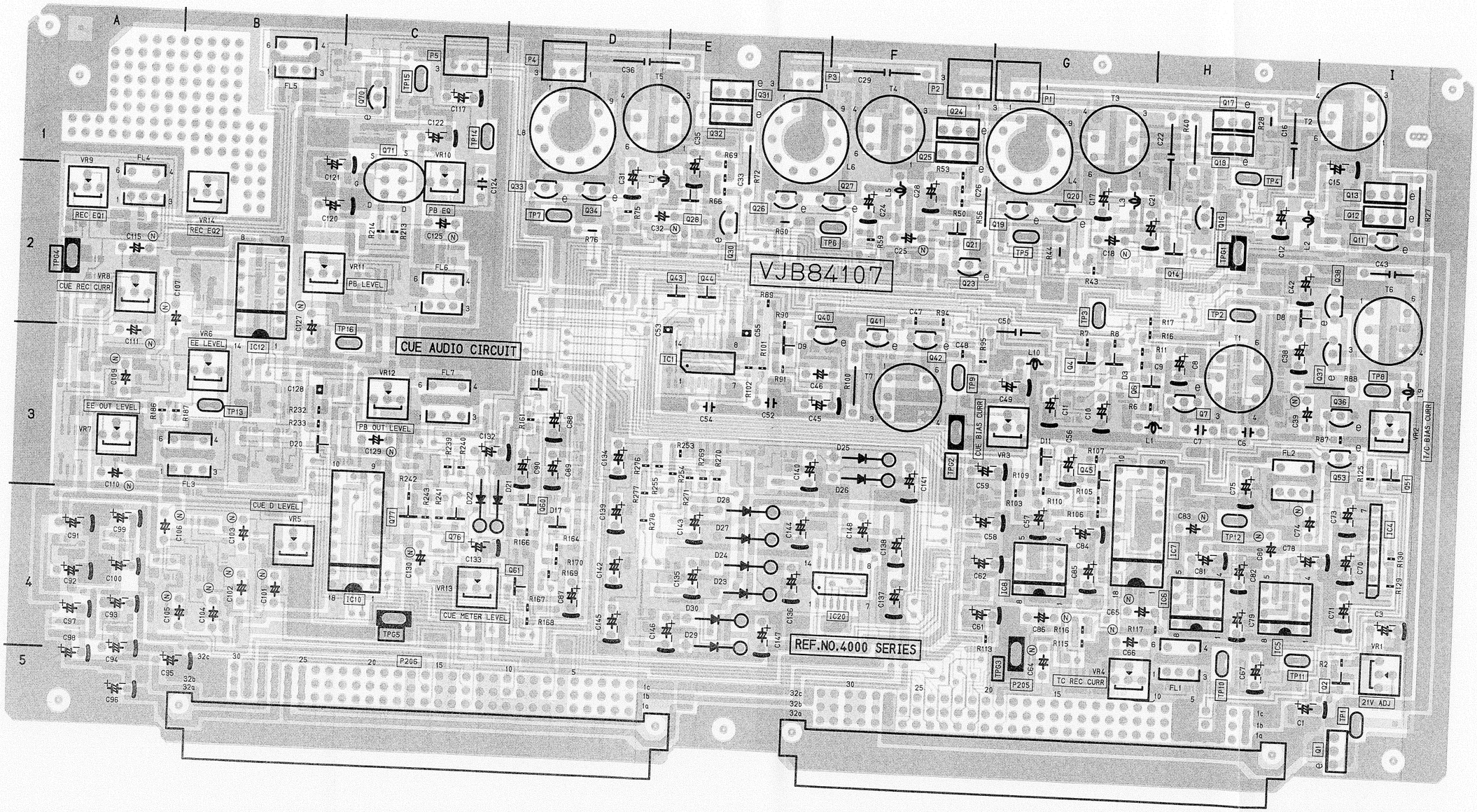

(COMPONENT SIDE)

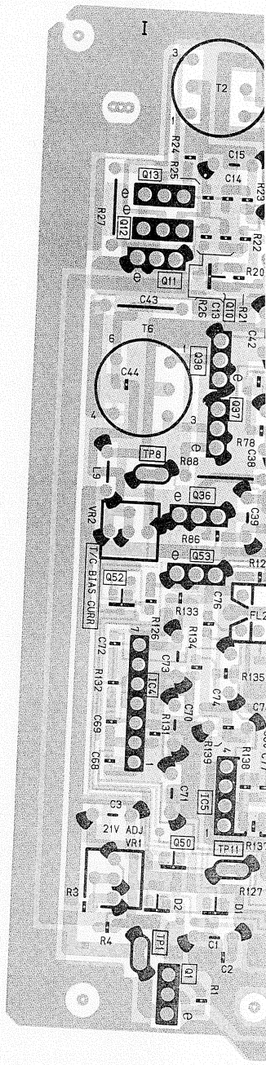

(FOIL SIDE)

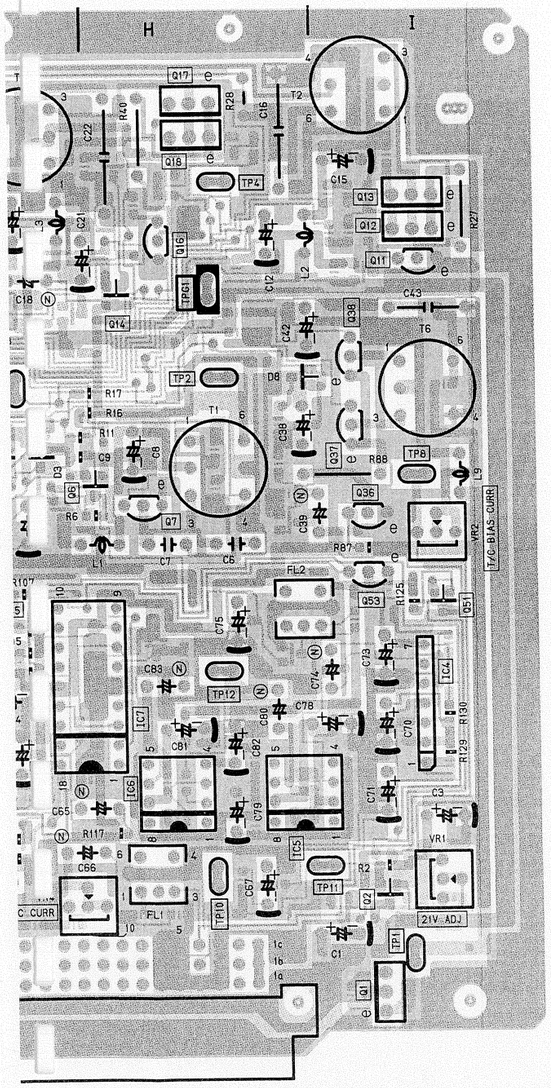

(COMPONENT SIDE)

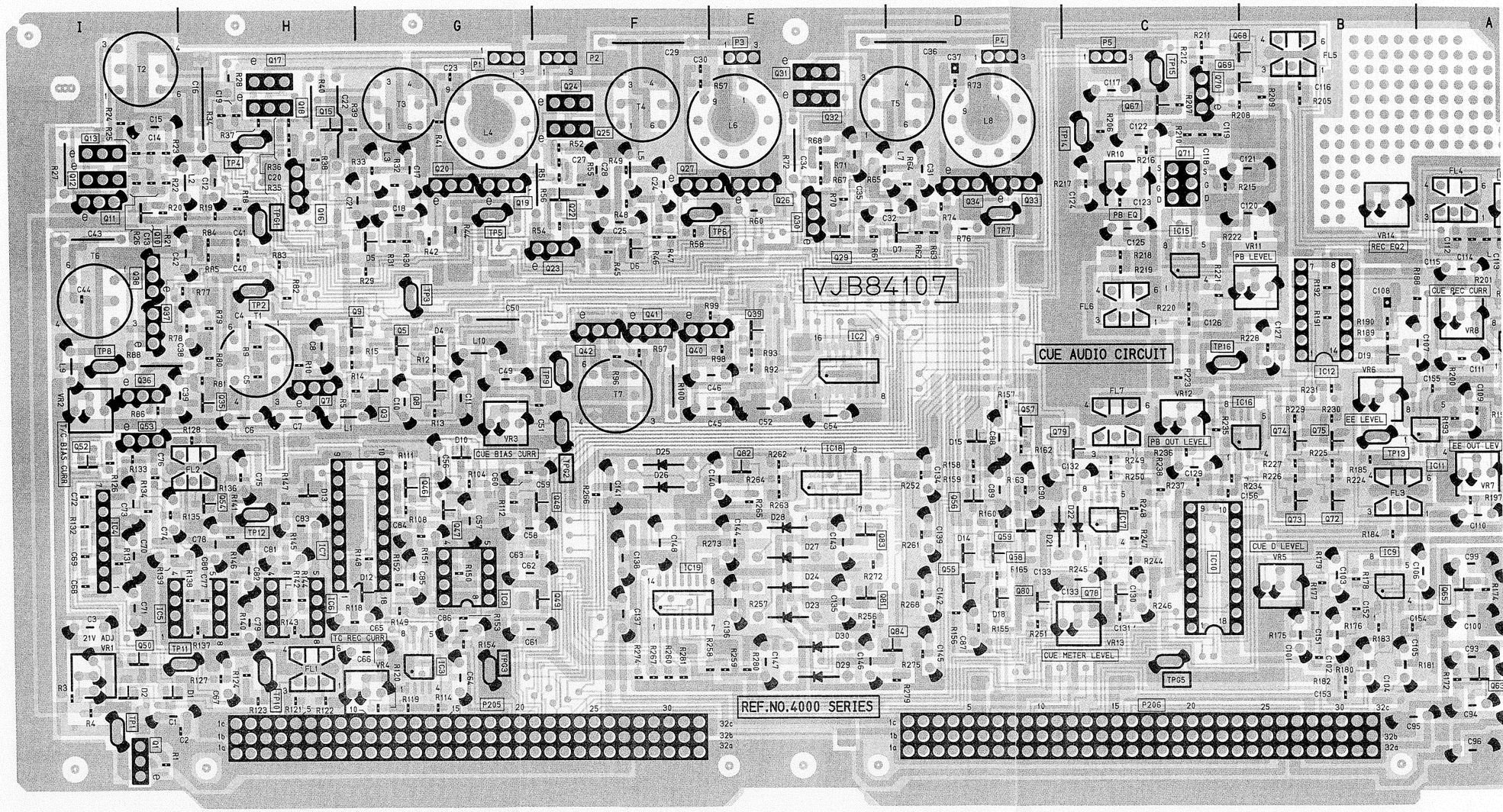

(FOIL SIDE)

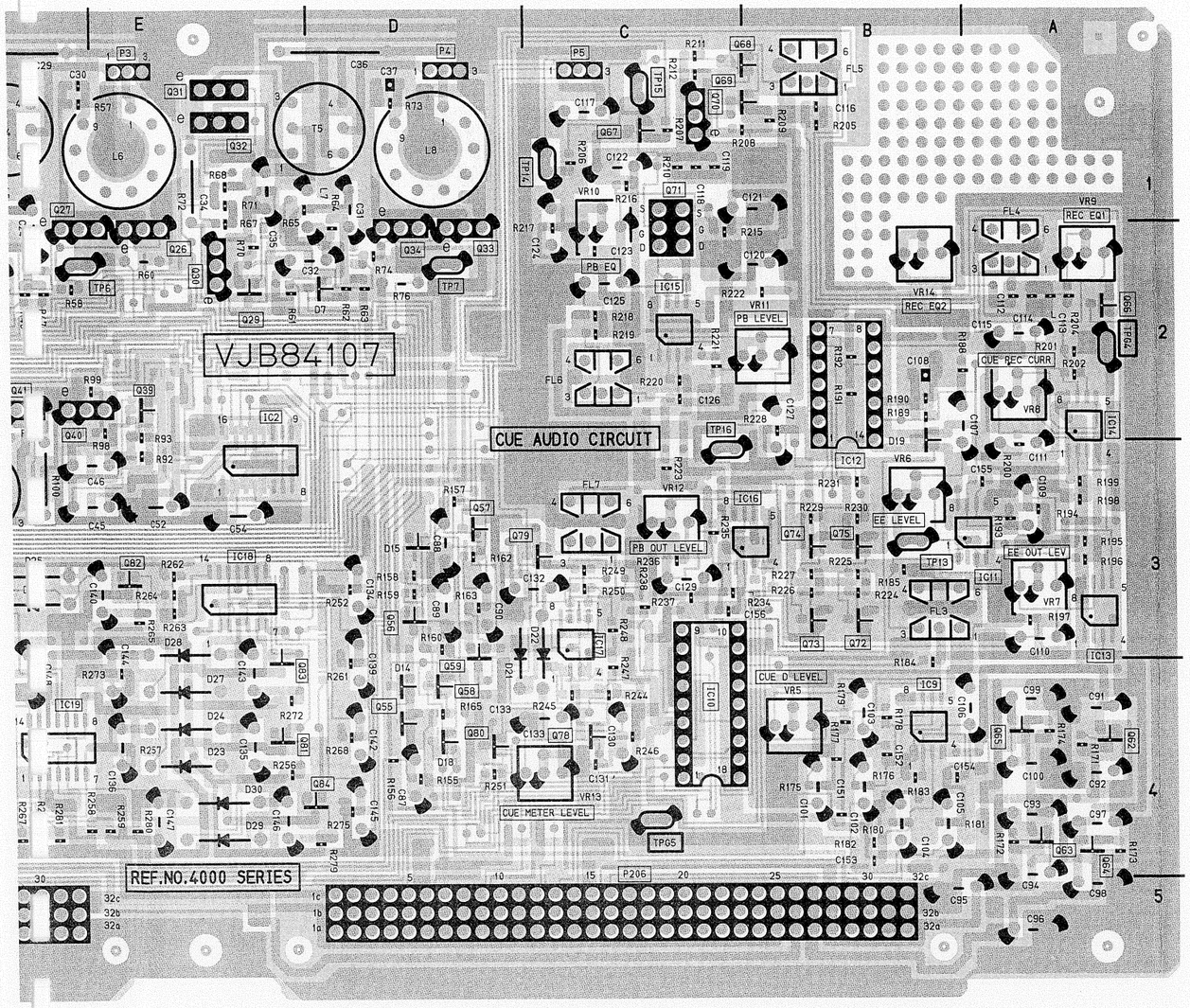

S3 CUE AUDIO

Transistors

Q4001	I-5	©
Q4001	I-5	Ⓕ
Q4002	I-4	©
Q4003	G-3	Ⓕ
Q4004	G-2	©
Q4005	G-2	Ⓕ
Q4006	G-2	©
Q4007	H-3	©
Q4008	G-3	Ⓕ
Q4009	G-2	Ⓕ
Q4010	I-2	Ⓕ
Q4011	I-2	©
Q4011	I-2	Ⓕ
Q4012	I-1	©
Q4012	I-1	Ⓕ
Q4013	I-1	©
Q4013	I-1	Ⓕ
Q4014	G-2	©
Q4015	H-1	Ⓕ
Q4016	H-1	©
Q4016	H-1	Ⓕ
Q4017	H-1	©
Q4017	H-1	Ⓕ
Q4018	H-1	©
Q4018	H-1	Ⓕ
Q4019	G-2	©
Q4019	G-2	Ⓕ
Q4020	G-1	©
Q4020	G-1	Ⓕ
Q4021	F-2	©
Q4022	F-2	Ⓕ
Q4023	F-2	©
Q4023	F-2	Ⓕ
Q4024	F-1	©
Q4024	F-1	Ⓕ
Q4025	F-1	©
Q4025	F-1	Ⓕ
Q4026	E-1	©
Q4026	E-1	Ⓕ
Q4027	F-1	©
Q4027	F-1	Ⓕ
Q4028	E-2	©
Q4029	E-2	Ⓕ
Q4030	E-2	©
Q4030	E-2	Ⓕ
Q4031	E-1	©
Q4031	E-1	Ⓕ
Q4032	E-1	©
Q4032	E-1	Ⓕ
Q4033	D-2	©
Q4033	D-2	Ⓕ
Q4034	D-2	©
Q4034	D-2	Ⓕ
Q4035	H-3	Ⓕ
Q4036	I-3	©
Q4036	I-3	Ⓕ
Q4037	I-2	©
Q4037	I-2	Ⓕ
Q4038	I-2	©
Q4038	I-2	Ⓕ
Q4039	F-2	©
Q4039	F-2	Ⓕ
Q4040	F-2	©
Q4040	F-2	Ⓕ
Q4041	F-2	Ⓕ
Q4042	F-3	©
Q4042	F-3	Ⓕ
Q4043	E-2	©
Q4044	E-2	©
Q4045	G-3	©
Q4046	G-3	Ⓕ
Q4047	G-3	Ⓕ
Q4048	F-3	Ⓕ
Q4049	F-4	Ⓕ
Q4050	I-4	Ⓕ
Q4051	I-3	©
Q4052	I-3	Ⓕ
Q4053	I-3	©
Q4053	I-3	Ⓕ
Q4054	H-3	Ⓕ
Q4055	D-4	Ⓕ
Q4056	D-3	Ⓕ
Q4057	D-3	Ⓕ
Q4058	D-4	Ⓕ
Q4059	D-4	Ⓕ
Q4060	D-3	©
Q4061	D-4	©
Q4062	A-4	Ⓕ
Q4063	A-4	Ⓕ
Q4064	A-4	Ⓕ
Q4065	A-4	Ⓕ
Q4066	A-2	Ⓕ
Q4067	C-1	Ⓕ
Q4068	C-1	Ⓕ
Q4069	C-1	Ⓕ
Q4070	C-1	©
Q4070	C-1	Ⓕ
Q4071	C-1	©
Q4071	C-1	Ⓕ
Q4072	B-3	Ⓕ
Q4073	B-3	Ⓕ
Q4074	B-3	Ⓕ
Q4075	B-3	Ⓕ
Q4076	C-4	©
Q4077	C-4	©
Q4078	C-4	Ⓕ
Q4080	D-4	Ⓕ
Q4081	D-4	Ⓕ
Q4082	E-3	Ⓕ
Q4083	D-4	Ⓕ
Q4084	D-4	Ⓕ
Q4086	G-4	©
Q4091	B-1	©
Q4091	B-1	Ⓕ
Q4092	B-1	©
Q4092	B-1	Ⓕ

Integrated circuits

IC4001	E-2	©
IC4001	E-2	Ⓕ
IC4002	E-3	Ⓕ
IC4003	G-4	Ⓕ
IC4004	I-3	©
IC4004	I-3	Ⓕ
IC4005	H-4	©
IC4005	H-4	Ⓕ
IC4006	H-4	©
IC4006	H-4	Ⓕ
IC4007	H-4	©
IC4007	H-4	Ⓕ
IC4008	G-4	©
IC4008	G-4	Ⓕ
IC4009	A-4	Ⓕ
IC4010	C-4	©
IC4010	C-4	Ⓕ
IC4011	A-3	Ⓕ
IC4012	B-2	©
IC4012	B-2	Ⓕ
IC4013	A-3	Ⓕ
IC4014	A-4	Ⓕ
IC4015	C-2	Ⓕ
IC4016	B-3	Ⓕ
IC4017	C-3	Ⓕ
IC4018	E-3	Ⓕ
IC4019	F-4	Ⓕ
IC4020	F-4	©

Test Points

TP4001	I-5	©
TP4001	I-5	Ⓕ
TP4002	H-2	©
TP4002	H-2	Ⓕ
TP4003	G-2	©
TP4003	G-2	Ⓕ
TP4004	H-1	©
TP4004	H-1	Ⓕ
TP4005	G-2	©
TP4005	G-2	Ⓕ
TP4006	F-2	©
TP4006	F-2	Ⓕ
TP4007	D-2	©
TP4007	D-2	Ⓕ
TP4008	I-3	©
TP4008	I-3	Ⓕ
TP4009	F-3	©
TP4009	F-3	Ⓕ
TP4010	H-4	©
TP4010	H-4	Ⓕ
TP4011	I-4	©
TP4011	I-4	Ⓕ
TP4012	H-3	©
TP4012	H-3	Ⓕ
TP4013	B-1	©
TP4014	C-1	©
TP4014	C-1	Ⓕ
TP4015	C-1	©
TP4016	C-3	©
TP4016	C-3	Ⓕ
TP4017	B-1	©
TP4017	B-1	Ⓕ
TP4018	B-1	©
TP4018	B-1	Ⓕ
TPG4001	H-2	©
TPG4001	H-2	Ⓕ
TPG4002	F-3	©
TPG4002	F-3	Ⓕ
TPG4003	G-4	©
TPG4003	G-4	©
TPG4004	A-2	©
TPG4004	A-2	Ⓕ
TPG4005	C-4	©
TPG4005	C-4	Ⓕ

Adjustments

VR4001	I-4	©
VR4001	I-4	Ⓕ
VR4002	I-3	©
VR4002	I-3	Ⓕ
VR4003	G-3	©
VR4003	G-3	Ⓕ
VR4004	G-4	©
VR4004	G-4	Ⓕ
VR4005	B-4	©
VR4005	B-4	Ⓕ
VR4006	B-1	©
VR4006	B-1	Ⓕ
VR4007	A-3	©
VR4007	A-3	Ⓕ
VR4008	A-2	©
VR4008	A-2	Ⓕ
VR4009	A-2	©
VR4009	A-2	Ⓕ
VR4010	C-1	©
VR4010	C-1	Ⓕ
VR4011	C-2	©
VR4011	C-2	Ⓕ
VR4012	C-3	©
VR4012	C-3	Ⓕ
VR4013	C-4	©
VR4013	C-4	Ⓕ
VR4014	B-2	©
VR4014	B-2	Ⓕ

Connectors

P4001	G-4	©
P4001	G-4	Ⓕ
P4002	F-1	©
P4002	F-1	Ⓕ
P4003	F-1	©
P4003	F-1	Ⓕ
P4004	D-1	©
P4004	D-1	Ⓕ
P4005	C-1	©
P4005	C-1	Ⓕ
P4205	G-4	©
P4205	G-4	Ⓕ
P4206	C-5	©
P4206	C-5	Ⓕ

ADDRESS INFORMATION
© ... COMPONENT SIDE
Ⓕ ... FOIL SIDE

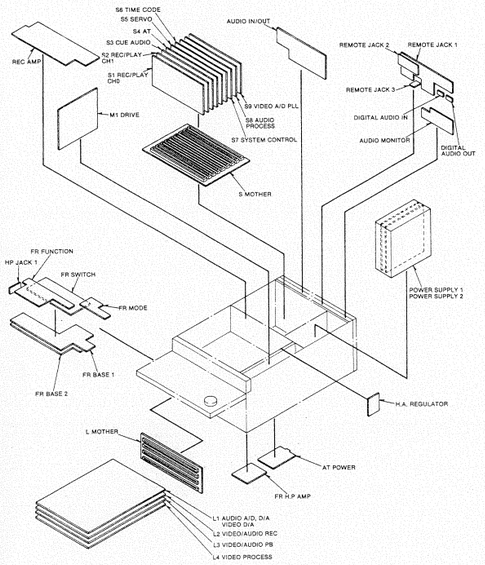

S4 AT P.C. BOARD (VEP82065D) [FOR PAL]
(VEP82065C) [FOR NTSC]

S4 AT SUB P.C. BOARD (VEP82078A)

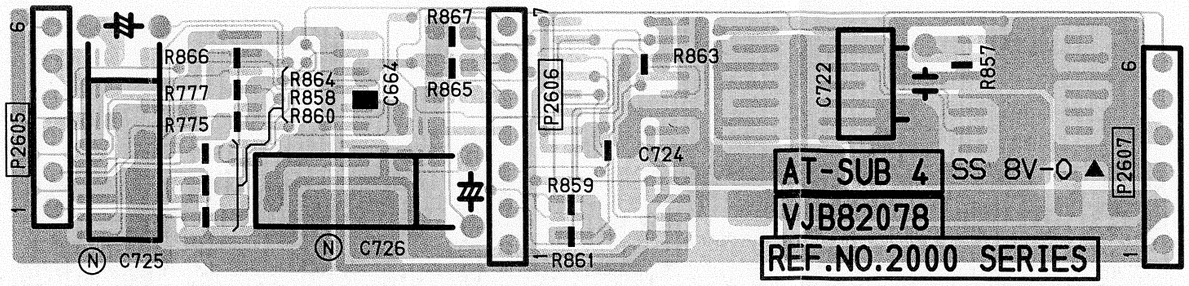

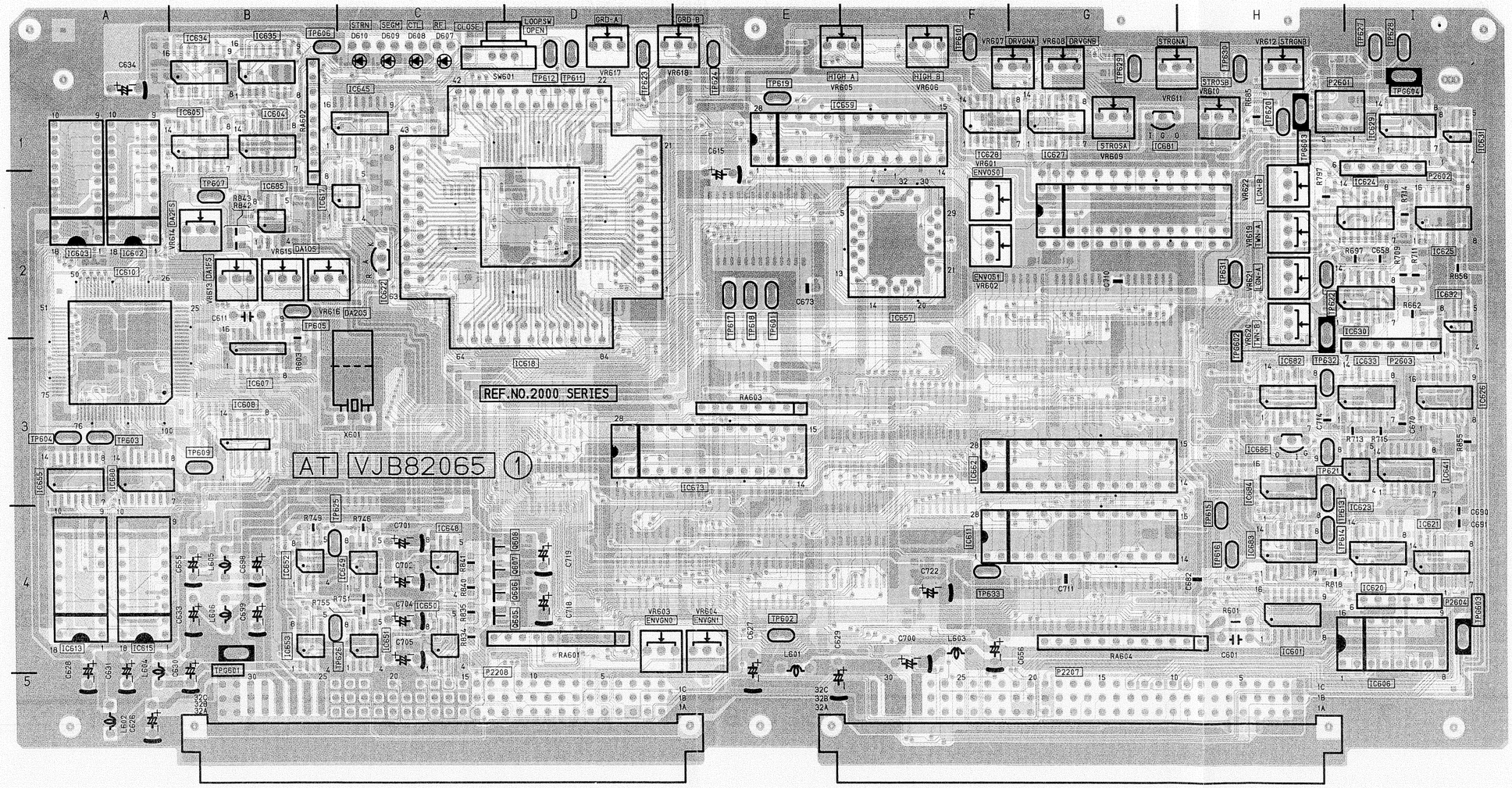

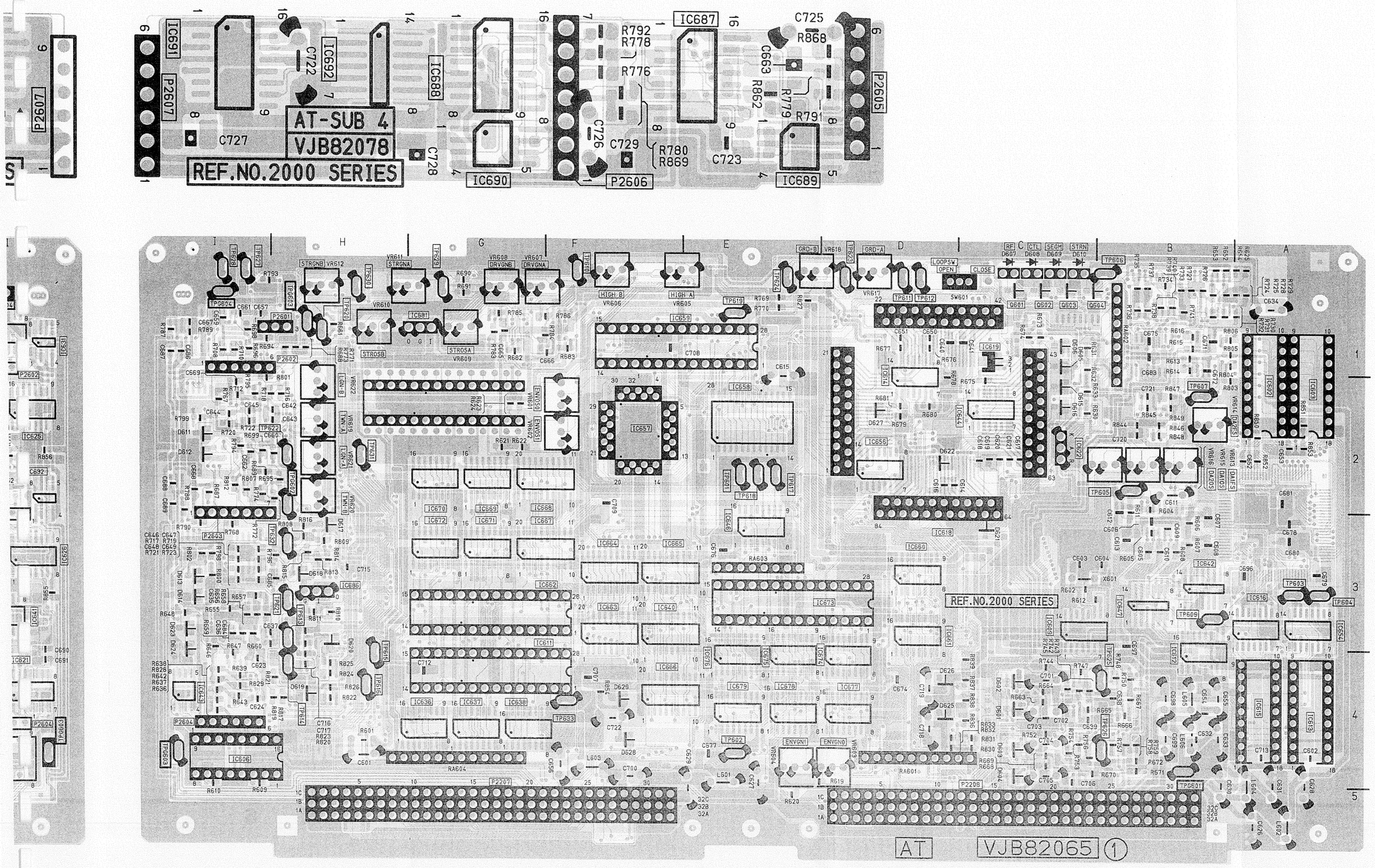
AT-SUB 4
VJB82078
REF.NO.2000 SERIES
AT VJB82065 ①
REF.NO.2000 SERIES

(FOIL SIDE)

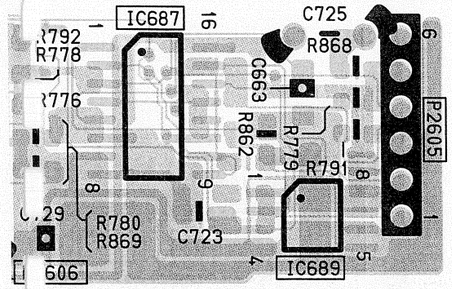

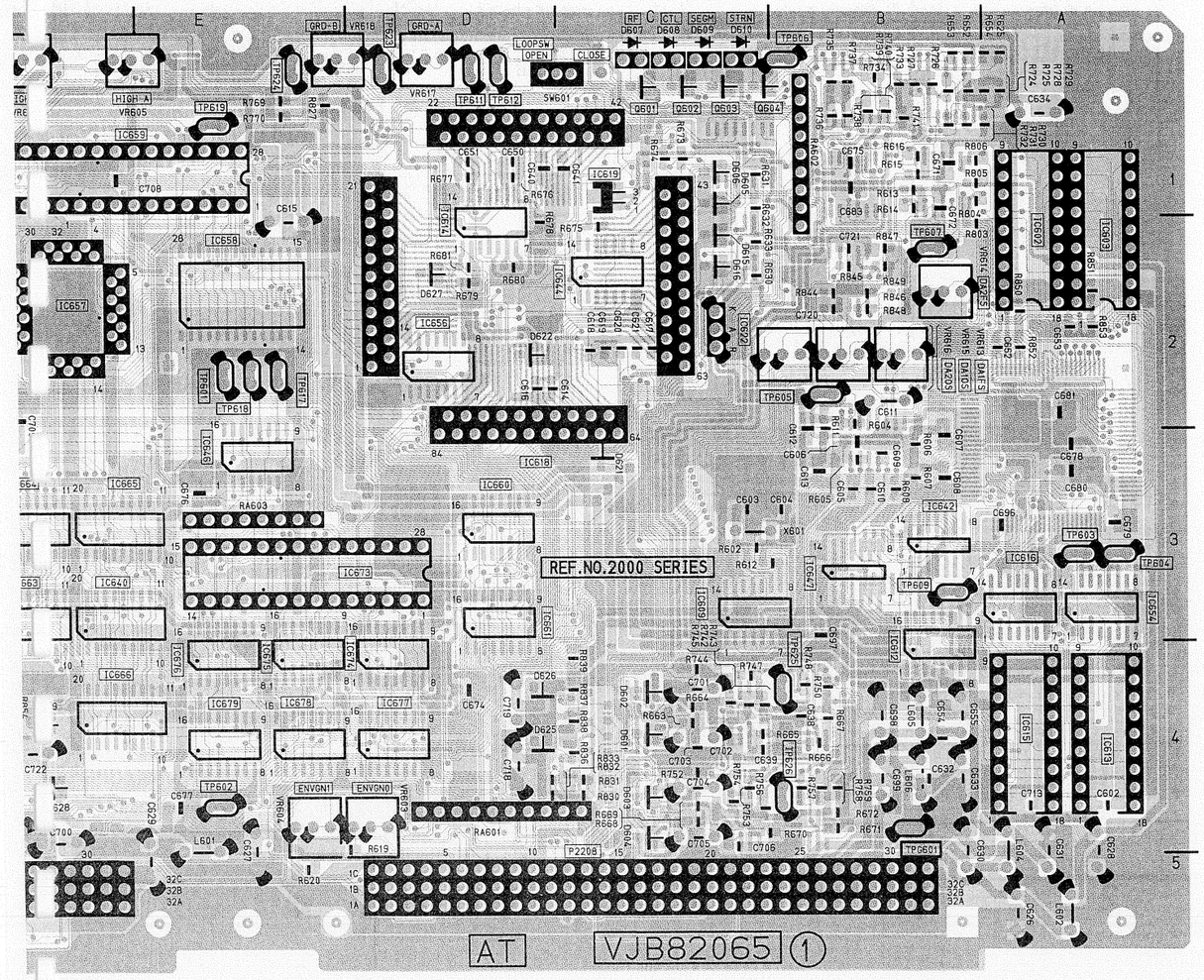

S4 AT

Transistors						Adjustments			
Q2601	C-1	F	IC2664	F-3	F	TP2628	I-1	C	VR2601	F-2	C
Q2602	C-1	F	IC2665	A-3	C	TP2628	I-1	F	VR2601	F-2	F
Q2603	C-1	F	IC2665	A-3	F	TP2629	G-1	C	VR2602	F-2	C
Q2604	C-1	F	IC2666	F-4	F	TP2629	G-1	F	VR2602	F-2	F
Q2605	D-4	C	IC2667	G-3	F	TP2630	H-1	C	VR2603	D-4	C
Q2606	D-4	C	IC2668	G-2	F	TP2630	H-1	F	VR2603	D-4	F
Q2607	D-4	C	IC2669	G-2	F	TP2631	H-2	C	VR2604	E-4	C
Q2608	D-4	C	IC2670	G-2	F	TP2631	H-2	F	VR2604	E-4	F
Integrated Circuits			IC2671	G-3	F	TP2632	H-3	C	VR2605	F-1	C
IC2601	H-1	C	IC2672	G-3	F	TP2632	H-3	F	VR2605	F-1	F
IC2602	A-2	C	IC2673	E-3	C	TP2633	F-4	C	VR2606	F-1	C
IC2602	A-2	F	IC2673	E-3	F	TP2633	F-4	F	VR2606	F-1	F
IC2603	A-2	C	IC2674	D-4	F	TPG2601	B-4	C	VR2607	F-1	C
IC2603	A-2	F	IC2675	E-4	F	TPG2601	B-4	F	VR2607	F-1	F
IC2604	B-1	C	IC2676	E-4	F	TPG2602	H-3	C	VR2608	G-1	C
IC2605	B-1	C	IC2677	D-4	F	TPG2602	H-2	F	VR2608	G-1	F
IC2606	I-4	C	IC2678	E-4	F	TPG2603	I-4	C	VR2609	G-1	C
IC2606	I-4	F	IC2679	E-4	F	TPG2603	I-4	F	VR2609	G-1	F
IC2607	B-3	C	IC2680	A-3	C	TPG2604	I-1	C	VR2610	H-1	C
IC2608	B-3	C	IC2681	G-1	C	TPG2604	I-1	F	VR2610	H-1	F
IC2609	C-3	F	IC2682	H-3	C	TPG2630	H-1	C	VR2611	G-1	C
IC2610	A-2	C	IC2683	H-4	C	TPG2630	H-1	F	VR2611	G-1	F
IC2611	F-4	C	IC2684	H-3	C				VR2612	H-1	C
IC2611	G-4	F	IC2685	B-2	C				VR2612	H-1	F
IC2612	B-4	F	IC2686	H-3	C				VR2613	B-2	C
IC2613	A-4	C	IC2686	H-3	F				VR2613	B-2	F
IC2613	A-4	F	**Test Points**						VR2614	B-2	C
IC2614	D-2	F	TP2601	E-2	C				VR2614	B-2	F
IC2615	A-4	C	TP2601	E-2	F				VR2615	B-2	C
IC2615	A-4	F	TP2602	E-4	C				VR2615	B-2	F
IC2616	A-3	F	TP2602	E-4	F				VR2616	B-2	C
IC2617	B-2	C	TP2603	A-3	C				VR2616	B-2	F
IC2618	D-3	C	TP2603	A-3	F				VR2617	D-1	C
IC2618	D-3	F	TP2604	A-3	C				VR2617	D-1	F
IC2619	C-1	F	TP2604	A-3	F				VR2618	E-1	C
IC2620	I-4	C	TP2605	B-2	C				VR2618	E-1	F
IC2621	I-4	C	TP2605	B-2	F				VR2619	H-2	C
IC2622	C-2	C	TP2606	B-1	C				VR2619	H-2	F
IC2622	G-3	F	TP2606	B-1	F				VR2620	H-2	C
IC2623	I-3	C	TP2607	B-2	C				VR2620	H-2	F
IC2624	I-2	C	TP2607	B-2	F				VR2621	H-2	C
IC2625	I-2	C	TP2609	B-3	C				VR2621	H-2	F
IC2626	I-3	C	TP2609	B-3	F				VR2622	H-2	C
IC2627	G-1	C	TP2610	F-1	C				VR2622	H-2	F
IC2628	F-1	C	TP2610	F-1	F				**Connectors**		
IC2629	I-1	C	TP2611	D-1	C				P2207	G-5	C
IC2630	I-2	C	TP2611	D-1	F				P2208	C-5	C
IC2631	I-1	C	TP2612	D-1	C				P2208	C-5	F
IC2632	I-2	C	TP2612	D-1	F				P2601	H-1	C
IC2633	I-3	C	TP2613	H-3	C				P2601	H-1	F
IC2634	B-1	C	TP2613	H-3	F				P2602	I-2	C
IC2635	B-1	C	TP2614	H-4	C				P2602	I-2	F
IC2636	G-4	F	TP2614	H-4	F				P2603	I-3	C
IC2637	G-4	F	TP2615	H-4	C				P2603	I-3	F
IC2638	G-4	F	TP2615	H-4	F				P2604	I-4	C
IC2640	F-3	F	TP2615	H-4	C				P2604	I-4	F
IC2641	I-3	C	TP2616	H-4	C						
IC2642	B-3	F	TP2616	H-4	F						
IC2643	I-4	F	TP2617	E-2	C						
IC2644	C-2	F	TP2617	E-2	F						
IC2645	C-1	C	TP2618	E-2	C						
IC2646	E-3	F	TP2618	E-2	F						
IC2647	C-4	C	TP2619	E-1	C						
IC2647	B-3	F	TP2619	E-1	F						
IC2649	C-4	C	TP2620	H-1	C						
IC2650	C-4	C	TP2620	H-1	F						
IC2651	C-4	C	TP2621	H-3	C						
IC2652	B-4	C	TP2621	H-3	F						
IC2653	B-4	C	TP2622	H-2	C						
IC2654	A-3	F	TP2622	H-2	F						
IC2656	D-2	F	TP2623	D-1	C						
IC2657	F-2	C	TP2623	D-1	F						
IC2657	F-2	F	TP2624	E-1	C						
IC2658	F-2	F	TP2624	E-1	F						
IC2659	F-1	C	TP2625	B-4	C						
IC2659	F-1	F	TP2625	B-4	F						
IC2660	D-3	F	TP2626	B-4	C						
IC2661	D-3	F	TP2626	B-4	F						
IC2662	F-3	C	TP2627	I-1	C						
IC2663	F-3	F	TP2627	I-1	F						

ADDRESS INFORMATION
Ⓒ... COMPONENT SIDE
Ⓕ... FOIL SIDE

S5 SERVO P.C. BOARD (VEP82067E) [FOR PAL]
(VEP82067D) [FOR NTSC]

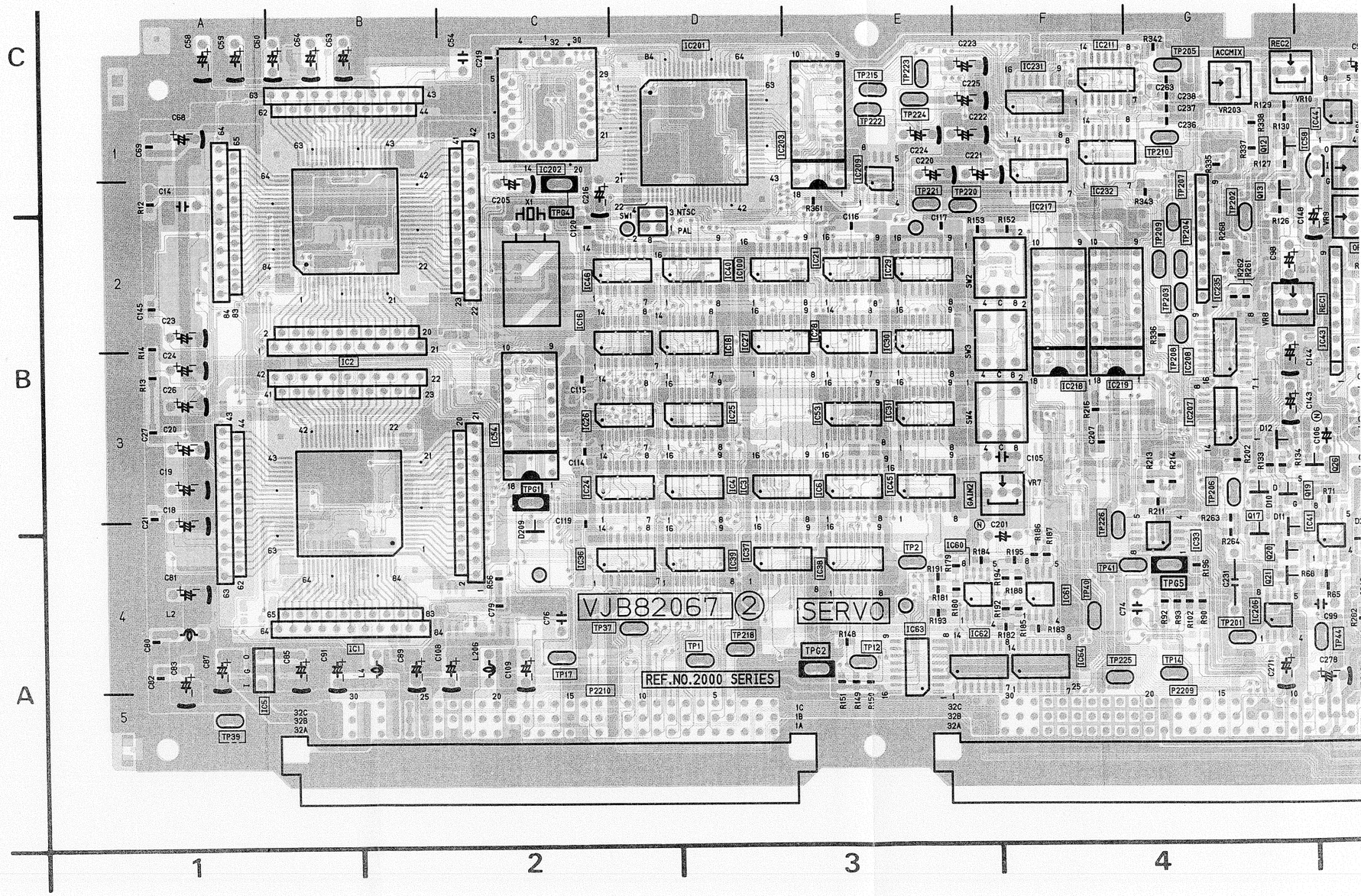

S5 SERVO

Transistors

Q2003	A-6 Ⓕ
Q2004	C-5 Ⓒ
Q2006	B-7 Ⓕ
Q2007	C-5 Ⓒ
Q2007	C-6 Ⓕ
Q2008	C-6 Ⓕ
Q2010	B-7 Ⓕ
Q2011	B-7 Ⓕ
Q2012	C-4 Ⓒ
Q2013	C-4 Ⓒ
Q2014	C-7 Ⓕ
Q2015	B-7 Ⓕ
Q2016	A-7 Ⓕ
Q2017	B-4 Ⓒ
Q2018	A-7 Ⓕ
Q2019	B-4 Ⓒ
Q2020	A-4 Ⓒ
Q2021	A-4 Ⓒ
Q2022	B-7 Ⓕ
Q2023	B-7 Ⓕ
Q2026	B-5 Ⓒ
Q2027	B-7 Ⓕ
Q2028	B-7 Ⓕ
Q2029	B-7 Ⓕ
Q2201	A-7 Ⓕ
Q2202	B-7 Ⓕ

Integrated Circuits

IC2001	A-1 Ⓒ
IC2001	A-10 Ⓕ
IC2002	B-1 Ⓒ
IC2002	B-10 Ⓕ
IC2003	B-3 Ⓒ
IC2004	B-3 Ⓒ
IC2005	A-1 Ⓒ
IC2005	A-10 Ⓕ
IC2006	B-3 Ⓒ
IC2011	A-6 Ⓕ
IC2012	A-6 Ⓕ
IC2013	A-6 Ⓕ
IC2014	A-6 Ⓕ
IC2015	B-6 Ⓕ
IC2016	B-2 Ⓒ
IC2018	B-3 Ⓒ
IC2021	B-3 Ⓒ
IC2022	A-7 Ⓕ
IC2023	A-9 Ⓕ
IC2024	B-2 Ⓒ
IC2025	B-3 Ⓒ
IC2026	B-2 Ⓒ
IC2027	B-3 Ⓒ
IC2028	B-3 Ⓒ
IC2029	B-3 Ⓒ
IC2030	B-3 Ⓒ
IC2031	B-3 Ⓒ
IC2033	A-4 Ⓒ
IC2035	A-8 Ⓕ
IC2036	A-2 Ⓒ
IC2037	A-3 Ⓒ
IC2038	A-3 Ⓒ
IC2039	A-3 Ⓒ
IC2040	B-3 Ⓒ
IC2041	B-4 Ⓒ
IC2042	C-6 Ⓕ
IC2043	B-5 Ⓒ
IC2043	B-7 Ⓕ
IC2044	C-5 Ⓒ
IC2045	B-3 Ⓒ
IC2046	B-2 Ⓒ
IC2047	A-5 Ⓒ
IC2047	A-6 Ⓕ
IC2050	A-5 Ⓒ
IC2051	A-5 Ⓒ
IC2053	B-3 Ⓒ
IC2054	B-2 Ⓒ
IC2054	B-9 Ⓕ
IC2055	A-9 Ⓕ
IC2056	B-7 Ⓕ
IC2057	B-10 Ⓕ
IC2058	C-4 Ⓒ
IC2058	C-7 Ⓕ
IC2060	A-3 Ⓒ
IC2061	A-4 Ⓒ
IC2062	A-3 Ⓒ
IC2063	A-3 Ⓒ
IC2064	A-4 Ⓒ
IC2100	B-3 Ⓒ
IC2201	D-3 Ⓒ
IC2202	C-2 Ⓒ
IC2202	C-9 Ⓕ
IC2203	C-3 Ⓒ
IC2203	C-8 Ⓕ
IC2204	C-10 Ⓕ
IC2205	C-5 Ⓒ
IC2206	A-4 Ⓒ
IC2207	B-4 Ⓒ
IC2208	B-4 Ⓒ
IC2209	C-3 Ⓒ
IC2210	C-7 Ⓕ
IC2211	C-4 Ⓒ
IC2212	C-7 Ⓕ
IC2213	C-6 Ⓕ
IC2214	C-6 Ⓕ
IC2216	A-10 Ⓕ
IC2217	C-4 Ⓒ
IC2218	B-4 Ⓒ
IC2218	B-8 Ⓕ
IC2219	B-4 Ⓒ
IC2219	B-7 Ⓕ
IC2220	B-7 Ⓕ
IC2221	B-7 Ⓕ
IC2222	B-7 Ⓕ
IC2231	C-4 Ⓒ
IC2232	C-4 Ⓒ
IC2233	C-7 Ⓕ
IC2235	B-4 Ⓒ
IC2235	B-7 Ⓕ
IC2236	B-7 Ⓕ
IC2237	B-6 Ⓕ
IC2238	B-5 Ⓒ
IC2239	B-6 Ⓕ
IC2240	B-6 Ⓕ
IC2241	B-5 Ⓒ
IC2242	B-6 Ⓕ
IC2243	B-6 Ⓕ
IC2245	B-5 Ⓒ

Test Points

TP2001	A-3 Ⓒ
TP2001	A-9 Ⓕ
TP2002	A-3 Ⓒ
TP2002	A-8 Ⓕ
TP2012	A-3 Ⓒ
TP2012	A-8 Ⓕ
TP2014	A-4 Ⓒ
TP2014	A-7 Ⓕ
TP2017	A-2 Ⓒ
TP2017	A-9 Ⓕ
TP2020	C-5 Ⓒ
TP2020	C-7 Ⓕ
TP2037	A-2 Ⓒ
TP2037	A-9 Ⓕ
TP2039	A-1 Ⓒ
TP2039	A-10 Ⓕ
TP2040	A-4 Ⓒ
TP2040	A-7 Ⓕ
TP2041	A-4 Ⓒ
TP2041	A-7 Ⓕ
TP2044	A-5 Ⓒ
TP2044	A-7 Ⓕ
TP2049	C-5 Ⓒ
TP2049	C-6 Ⓕ
TP2201	A-4 Ⓒ
TP2201	A-7 Ⓕ
TP2202	C-4 Ⓒ
TP2202	C-7 Ⓕ
TP2203	B-4 Ⓒ
TP2203	B-7 Ⓕ
TP2204	B-4 Ⓒ
TP2204	B-7 Ⓕ
TP2205	C-4 Ⓒ
TP2205	C-7 Ⓕ
TP2206	B-4 Ⓒ
TP2206	B-7 Ⓕ
TP2207	C-4 Ⓒ
TP2207	C-7 Ⓕ
TP2208	B-4 Ⓒ
TP2208	B-7 Ⓕ
TP2209	B-4 Ⓒ
TP2209	B-7 Ⓕ
TP2210	C-4 Ⓒ
TP2210	C-7 Ⓕ
TP2211	B-5 Ⓒ
TP2211	B-7 Ⓕ
TP2212	B-5 Ⓒ
TP2212	B-6 Ⓕ
TP2213	B-5 Ⓒ
TP2213	B-6 Ⓕ
TP2214	B-5 Ⓒ
TP2214	B-6 Ⓕ
TP2215	C-3 Ⓒ
TP2215	C-8 Ⓕ
TP2216	C-5 Ⓒ
TP2216	C-6 Ⓕ
TP2217	B-5 Ⓒ
TP2217	B-6 Ⓕ
TP2218	A-3 Ⓒ
TP2218	A-9 Ⓕ
TP2219	C-5 Ⓒ
TP2219	C-6 Ⓕ
TP2220	C-3 Ⓒ
TP2220	B-8 Ⓕ
TP2221	C-3 Ⓒ
TP2221	C-8 Ⓕ
TP2222	C-3 Ⓒ
TP2222	C-8 Ⓕ
TP2223	C-3 Ⓒ
TP2223	C-8 Ⓕ
TP2224	C-3 Ⓒ
TP2224	C-8 Ⓕ
TP2225	A-4 Ⓒ
TP2225	A-7 Ⓕ
TP2226	B-4 Ⓒ
TP2226	A-7 Ⓕ
TPG2001	B-2 Ⓒ
TPG2001	B-9 Ⓕ
TPG2002	A-3 Ⓒ
TPG2002	A-8 Ⓕ
TPG2004	C-2 Ⓒ
TPG2004	C-9 Ⓕ
TPG2005	A-4 Ⓒ
TPG2005	A-7 Ⓕ

Adjustments

VR2001	A-5 Ⓒ
VR2001	A-6 Ⓕ
VR2002	A-5 Ⓒ
VR2002	A-6 Ⓕ
VR2006	C-5 Ⓒ
VR2006	C-6 Ⓕ
VR2007	B-4 Ⓒ
VR2007	B-8 Ⓕ
VR2008	B-4 Ⓒ
VR2008	B-7 Ⓕ
VR2009	B-5 Ⓒ
VR2009	B-7 Ⓕ
VR2010	C-4 Ⓒ
VR2010	C-7 Ⓕ
VR2203	C-4 Ⓒ
VR2203	C-7 Ⓕ

Connectors

P2209	A-4 Ⓒ
P2209	A-7 Ⓕ
P2210	A-2 Ⓒ
P2210	A-9 Ⓕ

Switches

SW2001	B-2 Ⓒ
SW2001	C-9 Ⓕ
SW2002	B-3 Ⓒ
SW2002	B-8 Ⓕ
SW2003	B-3 Ⓒ
SW2003	B-8 Ⓕ
SW2004	B-3 Ⓒ
SW2004	B-8 Ⓕ

ADDRESS INFORMATION
Ⓒ ... COMPONENT SIDE
Ⓕ ... FOIL SIDE

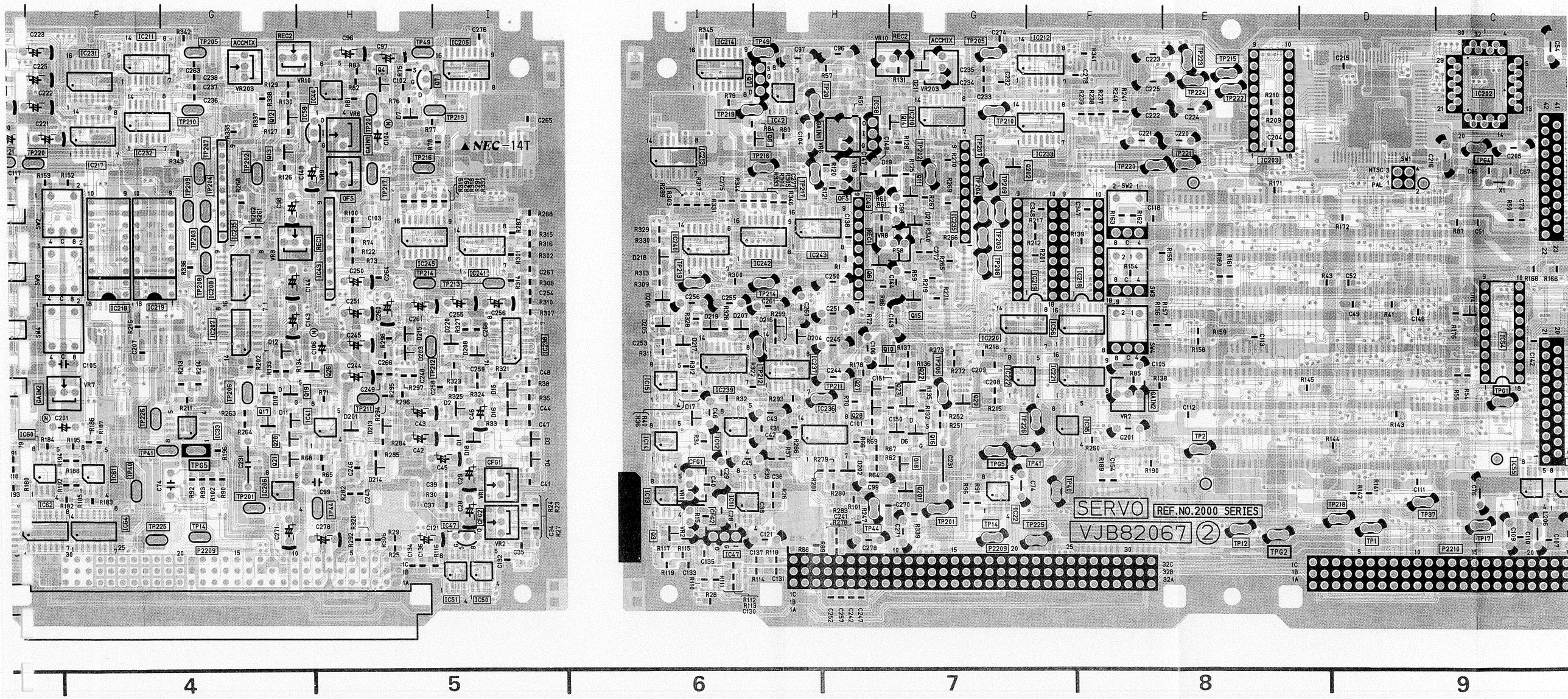
NEC-14T
SERVO
REF.NO.2000 SERIES
VJB82067 ②
4
5
6
7
8
9

Effective From
Serial No. D2TMD .....
D2TMC .....

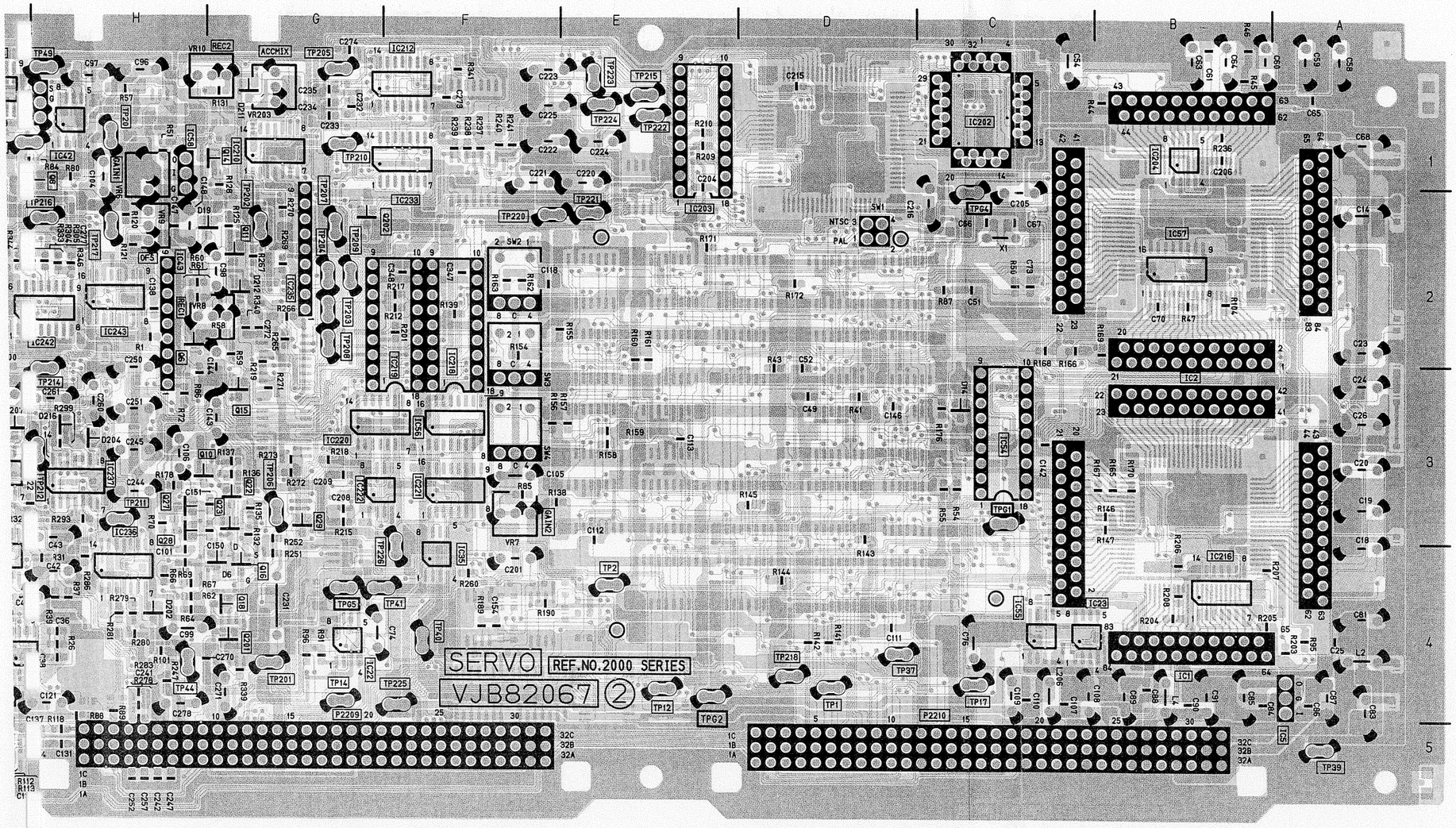

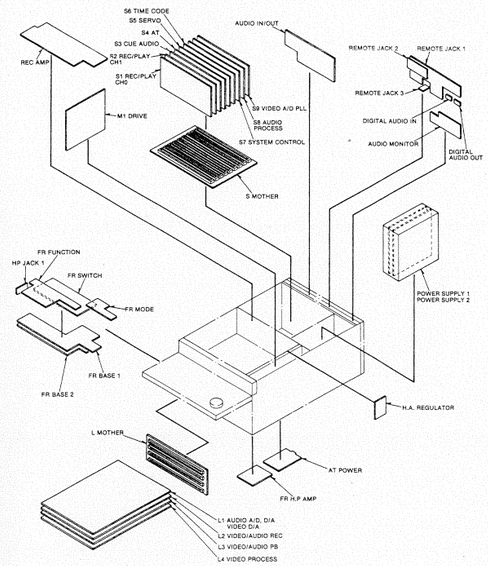

S5 SERVO SUB P.C. BOARD (VEP82085B)

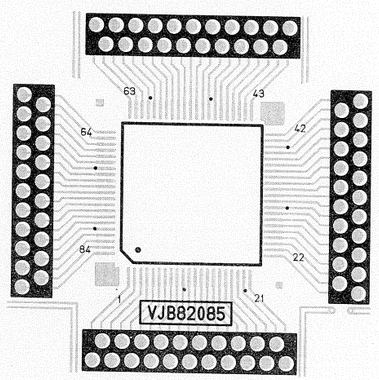

S6 TIME CODE P.C. BOARD (VEP86091G) [FOR PAL]
(VEP86091F) [FOR NTSC]

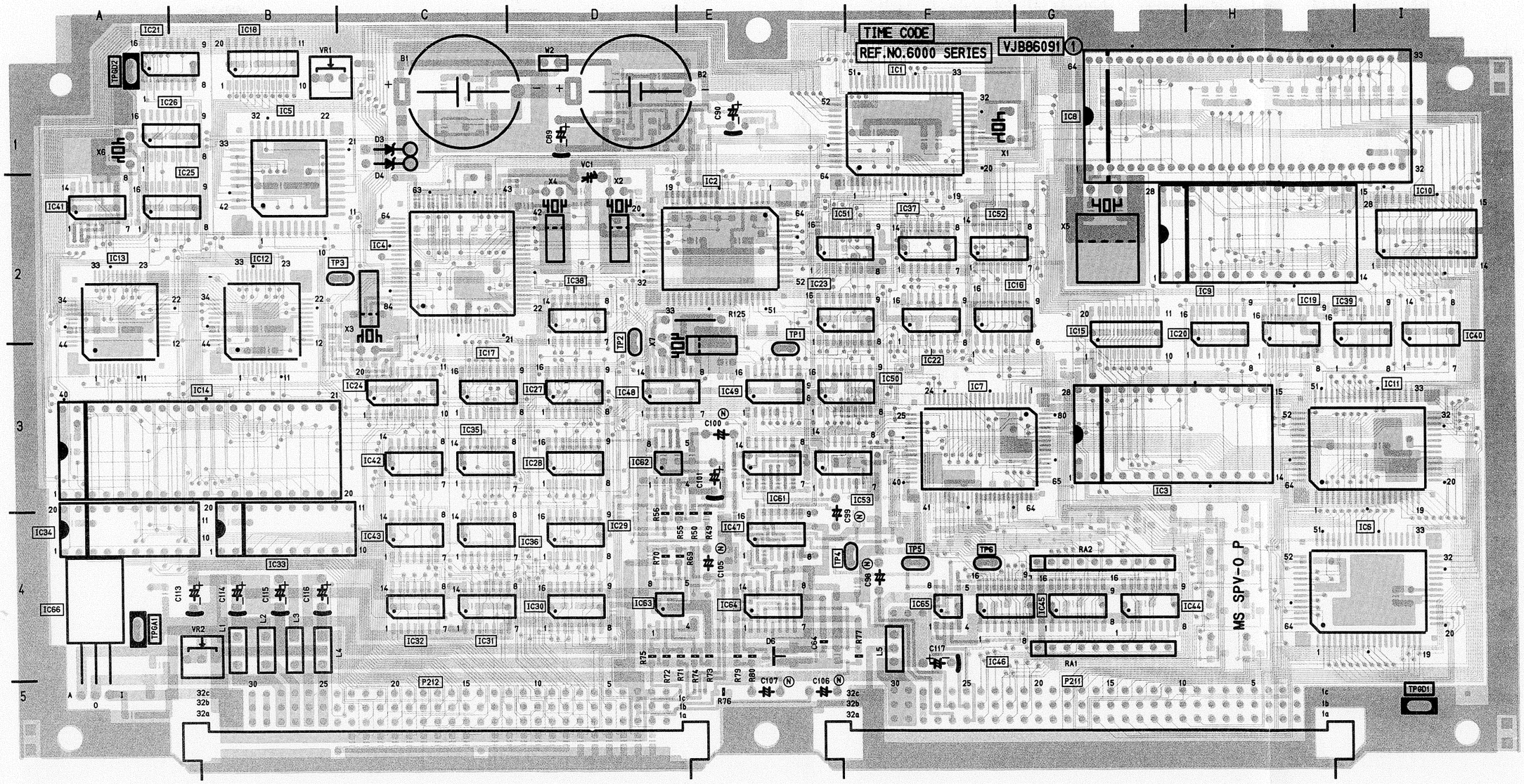

(COMPONENT SIDE)

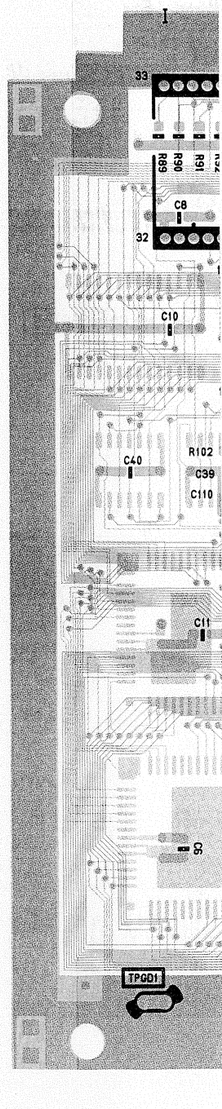

(FOIL SIDE

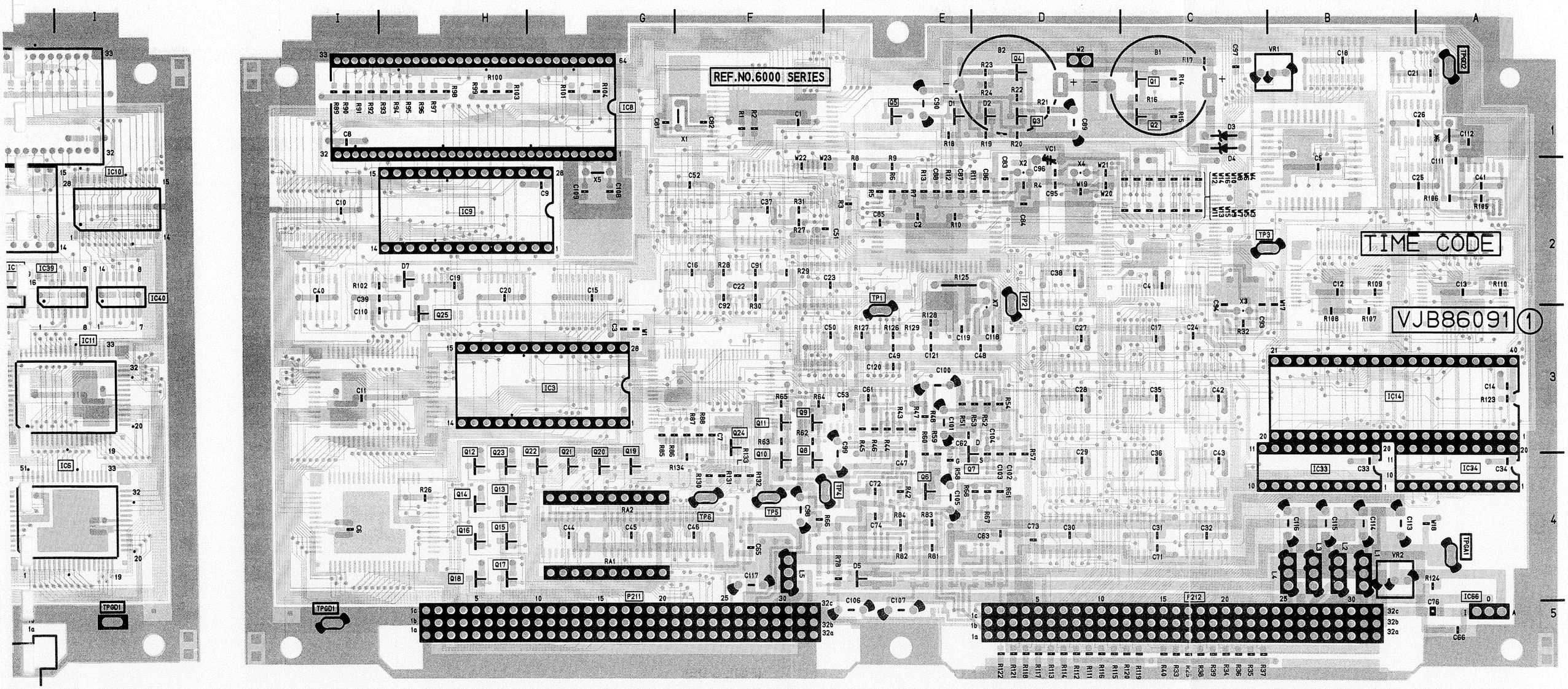

(COMPONENT SIDE)

(FOIL SIDE)

VJB86091-1

S6 TIME CODE SUB P.C. BOARD (VEP86133B) [FOR PAL]
(VEP86133A) [FOR NTSC]

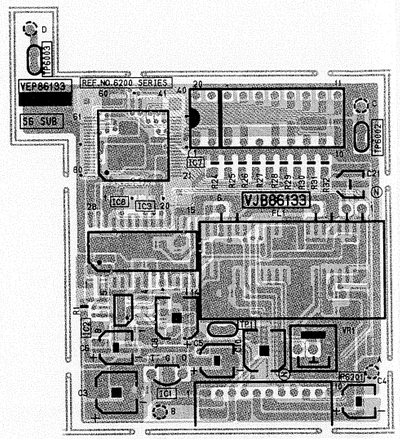

(COMPONENT SIDE)

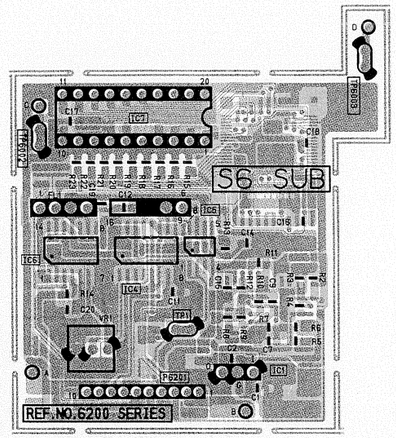

(FOIL SIDE)

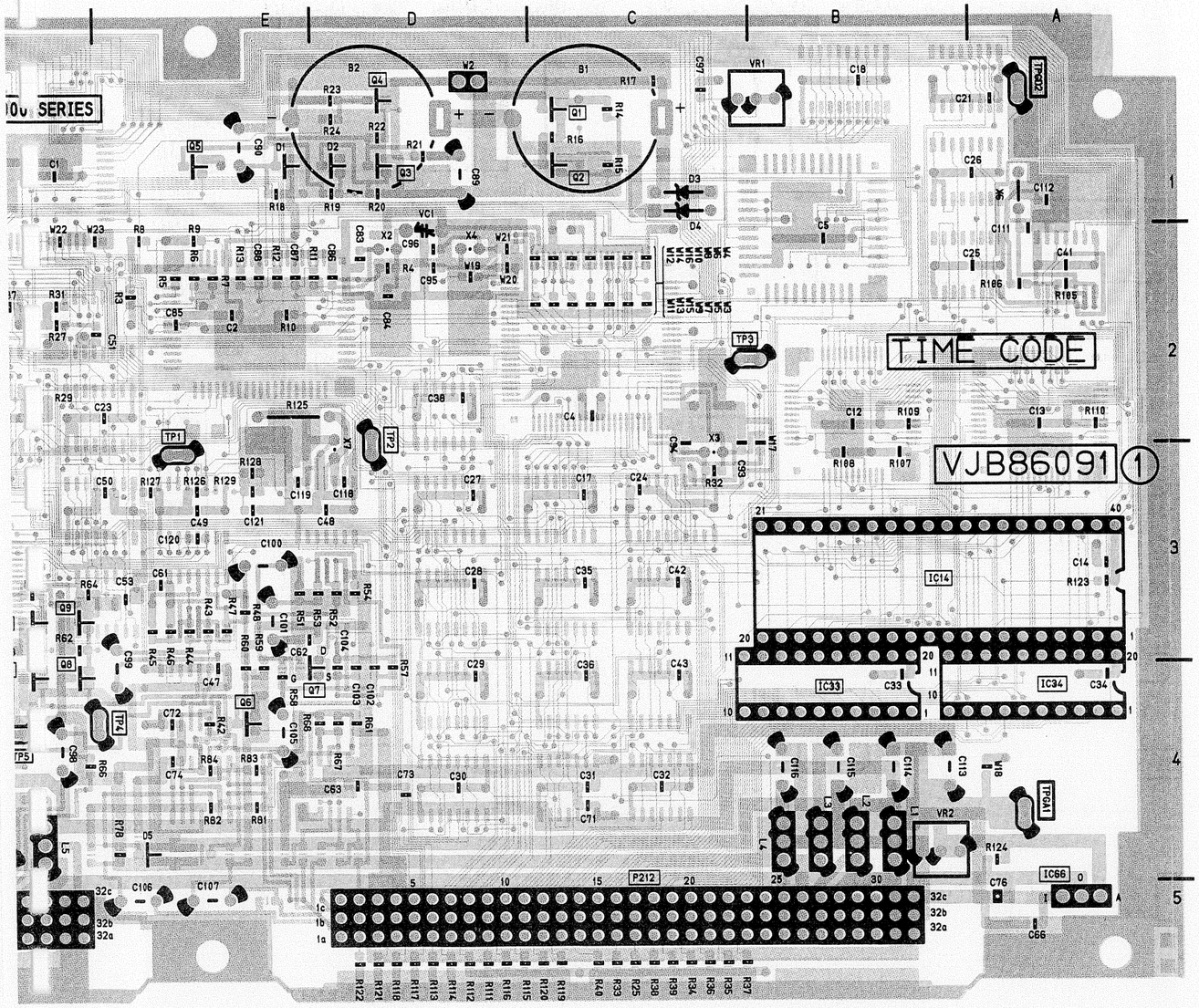

VJB86091-1

S6 TIME CODE											
Transistor		IC6005	B-1 ©	IC6034	A-4 ©	TP6003	B-2 ©				
Q6001	C-1 Ⓕ	IC6006	I-4 ©	IC6034	A-4 Ⓕ	TP6003	B-2 Ⓕ				
Q6002	C-1 Ⓕ	IC6007	F-3 ©	IC6035	C-3 ©	TP6004	E-4 ©				
Q6003	D-1 Ⓕ	IC6008	G-1 ©	IC6036	D-4 ©	TP6004	E-4 Ⓕ				
Q6004	D-1 Ⓕ	IC6008	G-1 Ⓕ	IC6037	F-2 ©	TP6005	F-4 ©				
Q6005	E-1 Ⓕ	IC6009	H-2 ©	IC6038	D-2 ©	TP6005	F-4 Ⓕ				
Q6006	E-4 Ⓕ	IC6009	H-2 Ⓕ	IC6039	H-2 ©	TP6006	F-4 ©				
Q6007	D-4 Ⓕ	IC6010	I-2 ©	IC6040	I-3 ©	TP6006	F-4 Ⓕ				
Q6008	F-3 Ⓕ	IC6011	I-3 ©	IC6041	A-2 ©	TPGA6001	A-4 ©				
Q6009	F-3 Ⓕ	IC6012	B-3 ©	IC6042	C-3 ©	TPGA6001	A-4 Ⓕ				
Q6010	F-3 Ⓕ	IC6013	A-2 ©	IC6043	C-4 ©	TPGD6001	I-5 ©				
Q6011	F-3 Ⓕ	IC6014	B-3 ©	IC6044	G-4 ©	TPGD6001	I-5 Ⓕ				
Q6012	H-4 Ⓕ	IC6014	B-3 Ⓕ	IC6045	G-4 ©	TPGD6002	A-1 ©				
Q6013	H-4 Ⓕ	IC6015	G-2 ©	IC6046	F-4 ©	TPGD6002	A-1 Ⓕ				
Q6014	H-4 Ⓕ	IC6016	F-2 ©	IC6047	E-4 ©						
Q6015	H-4 Ⓕ	IC6017	C-3 ©	IC6048	D-3 ©	**Adjustments**					
Q6016	H-4 Ⓕ	IC6018	B-1 ©	IC6049	E-3 ©	VC6001	D-1 ©				
Q6017	H-4 Ⓕ	IC6019	H-2 ©	IC6050	F-3 ©	VC6001	D-1 Ⓕ				
Q6018	H-4 Ⓕ	IC6020	G-2 ©	IC6051	E-2 ©	VR6001	B-1 ©				
Q6019	G-4 Ⓕ	IC6021	A-1 ©	IC6052	F-2 ©	VR6001	B-1 Ⓕ				
Q6020	G-4 Ⓕ	IC6022	F-3 ©	IC6053	E-3 ©	VR6002	B-4 ©				
Q6021	G-4 Ⓕ	IC6023	E-2 ©	IC6061	E-3 ©	VR6002	B-4 Ⓕ				
Q6022	G-4 Ⓕ	IC6024	C-3 ©	IC6062	D-3 ©						
Q6023	H-4 Ⓕ	IC6025	B-3 ©	IC6063	D-4 ©	**Connector**					
Q6024	F-3 Ⓕ	IC6026	A-2 ©	IC6064	E-4 ©	P6211	G-5 ©				
Q6025	H-3 Ⓕ	IC6027	D-3 ©	IC6065	F-4 ©	P6211	G-5 Ⓕ				
Integrated Circuits		IC6028	D-3 ©	IC6066	A-4 ©	P6212	C-5 ©				
IC6001	F-1 ©	IC6029	D-4 ©			P6212	C-5 Ⓕ				
IC6002	E-2 ©	IC6030	D-4 ©	**Test Points**							
IC6003	G-3 ©	IC6031	C-4 ©	TP6001	E-3 ©						
IC6003	G-3 Ⓕ	IC6032	C-4 ©	TP6001	E-3 Ⓕ						
IC6004	C-2 ©	IC6033	B-4 ©	TP6002	D-2 ©						
		IC6033	B-4 Ⓕ	TP6002	D-2 Ⓕ						

ADDRESS INFORMATION
© ... COMPONENT SIDE
Ⓕ ... FOIL SIDE

S7 SYSTEM CONTROL P.C. BOARD (VEP86092F) [FOR PAL]
(VEP86092E) [FOR NTSC]

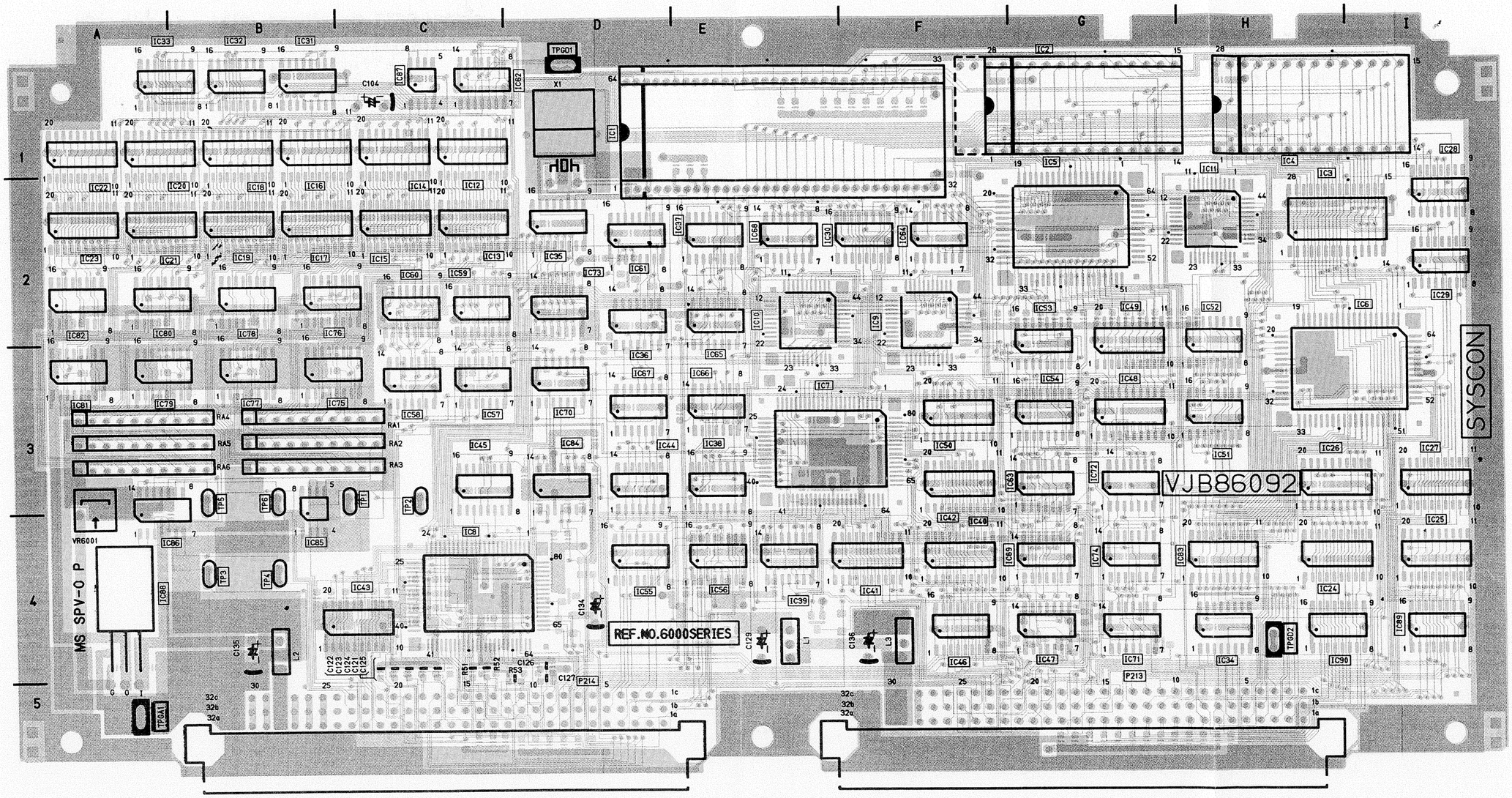

(COMPONENT SIDE)

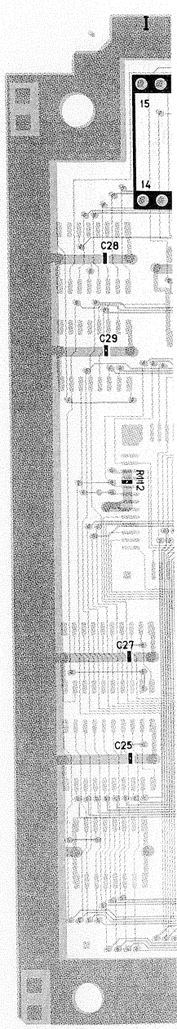

(FOIL

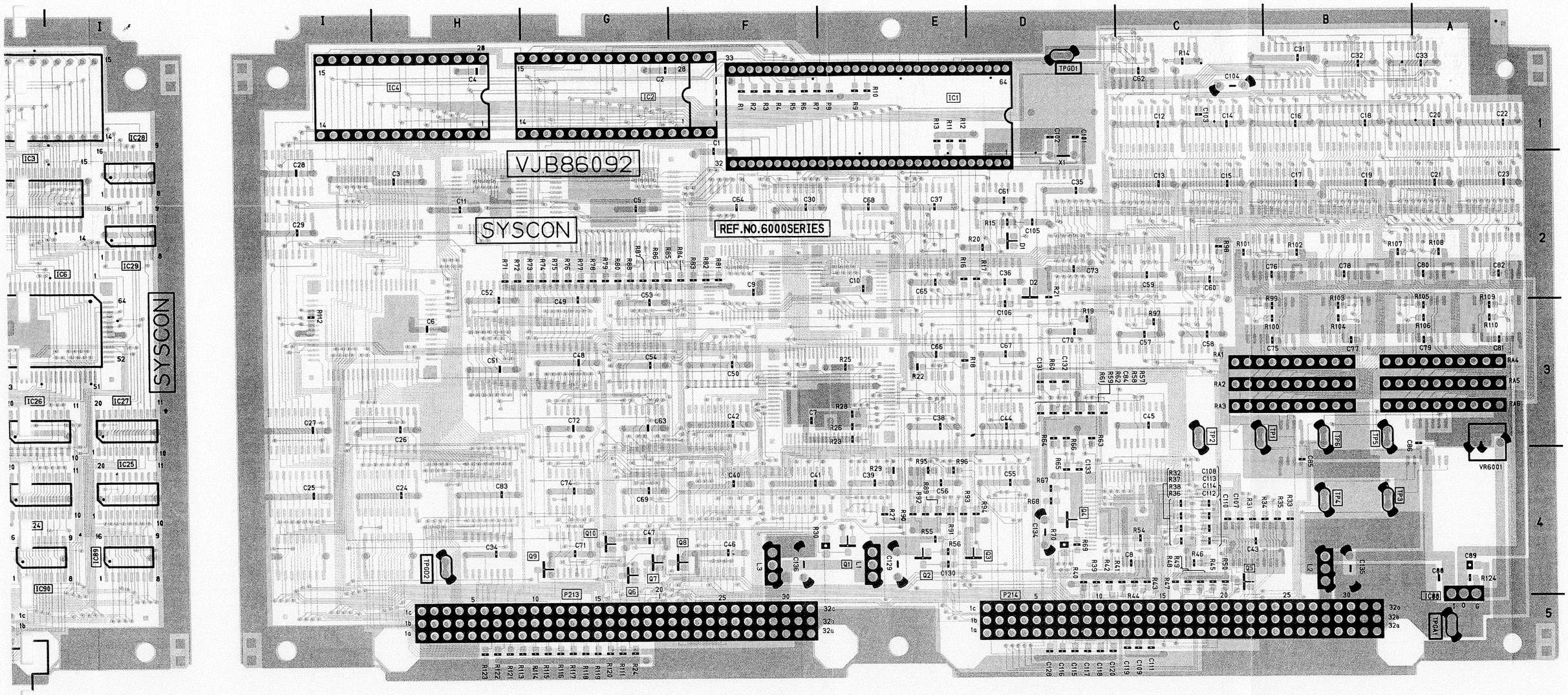

(COMPONENT SIDE)

(FOIL SIDE)

VJB86092

Transi
Q60
Q60
Q60
Q60
Q60
Q60
Q60
Q60
Q60
Q60
Integra
IC60
IC60
IC60

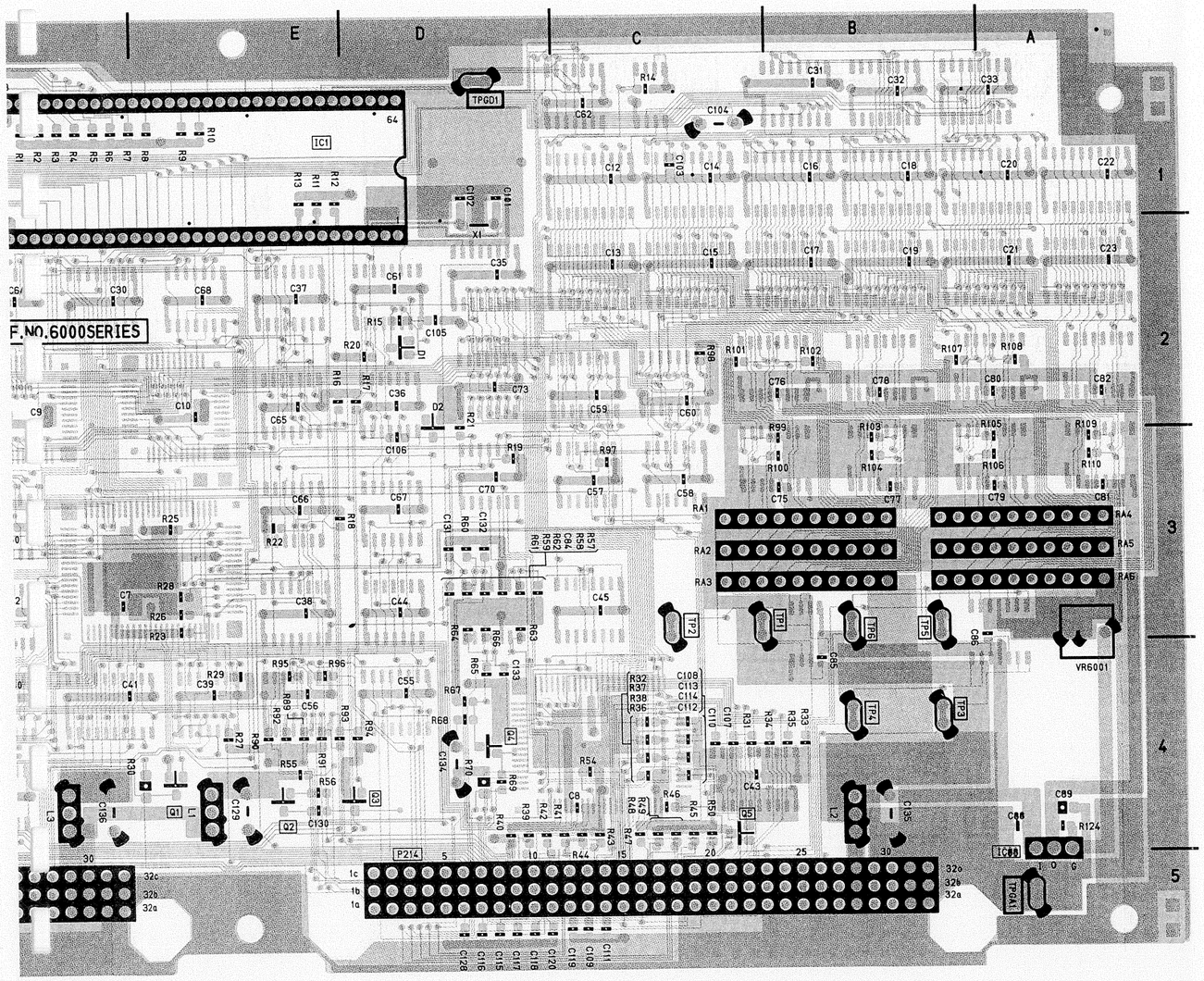

VJB86092

S7 SYSTEM CONTROL		
Transistors		
Q6001	E-4	Ⓕ
Q6002	E-4	Ⓕ
Q6003	D-4	Ⓕ
Q6004	D-4	Ⓕ
Q6005	B-4	Ⓕ
Q6006	G-4	Ⓕ
Q6007	G-4	Ⓕ
Q6008	F-4	Ⓕ
Q6009	G-4	Ⓕ
Q6010	G-4	Ⓕ
Integrated Circuits		
IC6001	E-1	Ⓒ
IC6001	E-1	Ⓕ
IC6002	G-1	Ⓒ
IC6002	G-1	Ⓕ
IC6003	H-1	Ⓒ
IC6004	H-1	Ⓒ
IC6004	H-1	Ⓕ
IC6005	G-1	Ⓒ
IC6006	H-2	Ⓒ
IC6007	E-3	Ⓒ
IC6008	C-4	Ⓒ
IC6009	F-2	Ⓒ
IC6010	E-2	Ⓒ
IC6011	H-1	Ⓒ
IC6012	C-2	Ⓒ
IC6013	C-2	Ⓒ
IC6014	C-2	Ⓒ
IC6015	C-2	Ⓒ
IC6016	B-2	Ⓒ
IC6017	B-2	Ⓒ
IC6018	B-2	Ⓒ
IC6019	B-2	Ⓒ
IC6020	A-2	Ⓒ
IC6021	A-2	Ⓒ
IC6022	A-2	Ⓒ
IC6023	A-2	Ⓒ
IC6024	H-4	Ⓒ
IC6025	I-4	Ⓒ
IC6026	H-3	Ⓒ
IC6027	I-3	Ⓒ
IC6028	I-1	Ⓒ
IC6029	I-2	Ⓒ
IC6030	E-2	Ⓒ
IC6031	B-1	Ⓒ
IC6032	B-1	Ⓒ
IC6033	A-1	Ⓒ
IC6034	H-4	Ⓒ
IC6035	D-2	Ⓒ
IC6036	D-3	Ⓒ
IC6037	E-2	Ⓒ
IC6038	E-3	Ⓒ
IC6039	E-4	Ⓒ
IC6040	F-3	Ⓒ
IC6041	F-4	Ⓒ
IC6042	F-3	Ⓒ
IC6043	C-4	Ⓒ
IC6044	D-3	Ⓒ
IC6045	C-3	Ⓒ
IC6046	F-4	Ⓒ
IC6047	G-4	Ⓒ
IC6048	G-3	Ⓒ
IC6049	G-2	Ⓒ
IC6050	F-3	Ⓒ
IC6051	H-3	Ⓒ
IC6052	H-2	Ⓒ
IC6053	G-2	Ⓒ
IC6054	G-3	Ⓒ
IC6055	D-4	Ⓒ
IC6056	E-4	Ⓒ
IC6057	C-3	Ⓒ
IC6058	C-3	Ⓒ
IC6059	C-2	Ⓒ
IC6060	C-2	Ⓒ
IC6061	D-2	Ⓒ
IC6062	D-1	Ⓒ
IC6063	G-3	Ⓒ
IC6064	F-4	Ⓒ
IC6065	E-2	Ⓒ
IC6066	E-3	Ⓒ
IC6067	D-3	Ⓒ
IC6068	E-2	Ⓒ
IC6069	G-4	Ⓒ
IC6070	D-3	Ⓒ
IC6071	G-4	Ⓒ
IC6072	G-3	Ⓒ
IC6073	D-2	Ⓒ
IC6074	G-4	Ⓒ
IC6075	B-3	Ⓒ
IC6076	B-2	Ⓒ
IC6077	B-3	Ⓒ
IC6078	B-2	Ⓒ
IC6079	A-3	Ⓒ
IC6080	A-2	Ⓒ
IC6081	A-3	Ⓒ
IC6082	A-2	Ⓒ
IC6083	H-4	Ⓒ
IC6084	D-3	Ⓒ
IC6085	B-4	Ⓒ
IC6086	A-4	Ⓒ
IC6087	C-1	Ⓒ
IC6088	A-4	Ⓒ
IC6088	A-4	Ⓕ
IC6089	I-4	Ⓒ
IC6090	H-5	Ⓒ
Test Points		
TP6001	B-3	Ⓒ
TP6001	B-3	Ⓕ
TP6002	C-3	Ⓒ
TP6002	C-3	Ⓕ
TP6003	B-4	Ⓒ
TP6003	B-4	Ⓕ
TP6004	B-4	Ⓒ
TP6004	B-4	Ⓕ
TP6005	B-4	Ⓒ
TP6005	B-4	Ⓕ
TP6006	B-4	Ⓒ
TP6006	B-4	Ⓕ
TPGA6001	A-5	Ⓒ
TPGA6001	A-5	Ⓕ
TPGD6001	D-1	Ⓒ
TPGD6001	D-1	Ⓕ
TPGD6002	H-4	Ⓒ
TPGD6002	H-4	Ⓕ
Adjustments		
VR6001	A-4	Ⓒ
VR6001	A-4	Ⓕ
Connectors		
P6213	G-5	Ⓒ
P6213	G-5	Ⓕ
P6214	D-5	Ⓒ
P6214	D-5	Ⓕ

ADDRESS INFORMATION
Ⓒ... COMPONENT SIDE
Ⓕ... FOIL SIDE

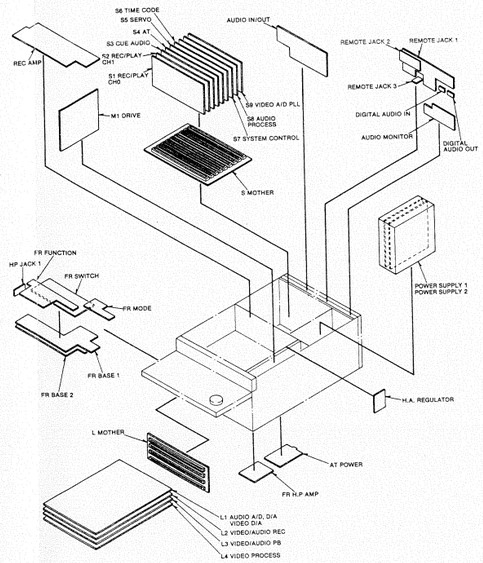

S8 AUDIO PROCESS P.C. BOARD (VEP84111B) [FOR PAL]
(VEP84111A) [FOR NTSC]

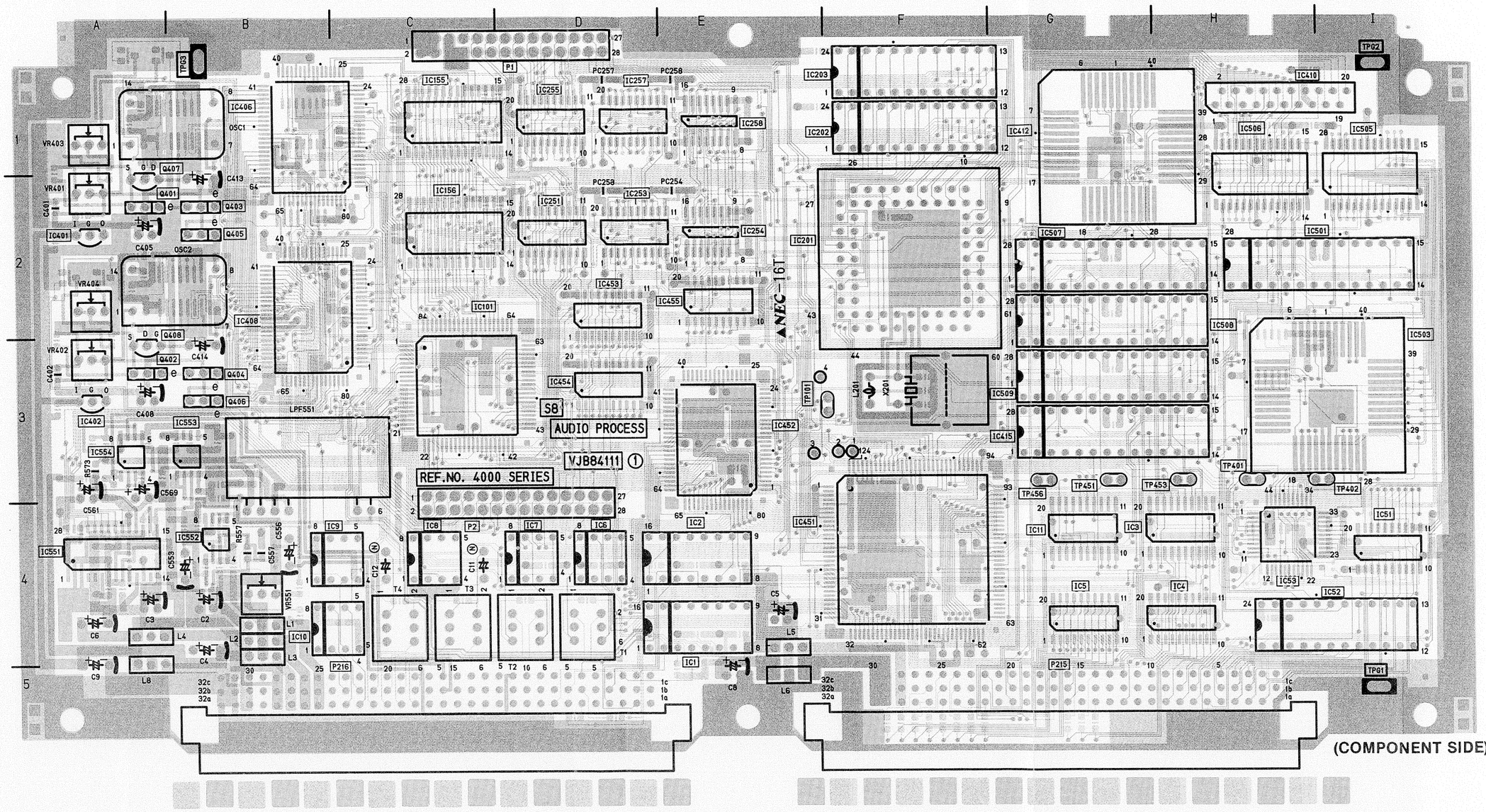

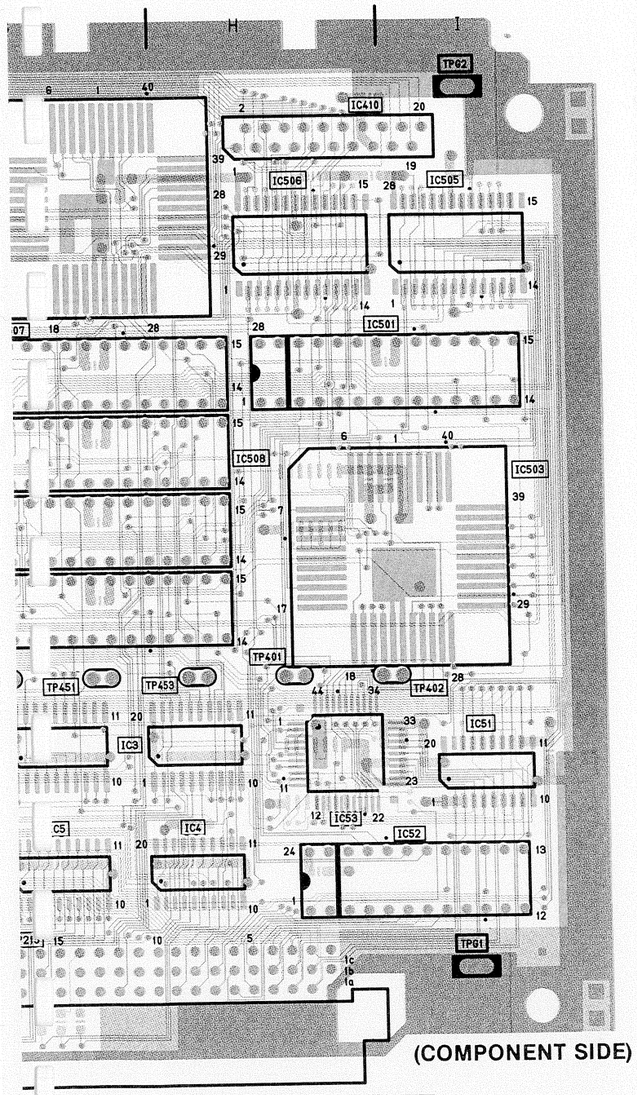

(COMPONENT SIDE)

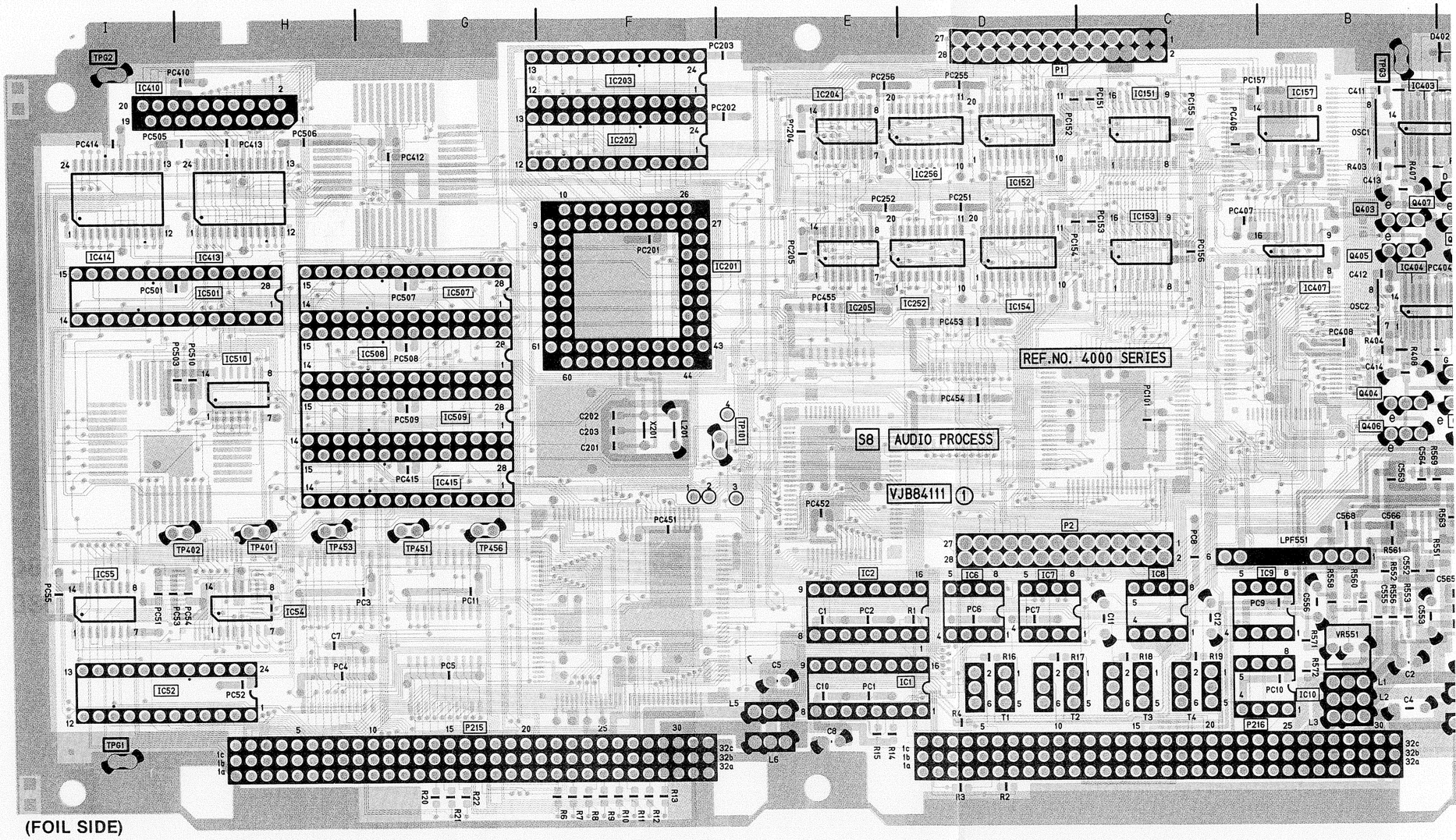

(FOIL SIDE)

VJB84111-1

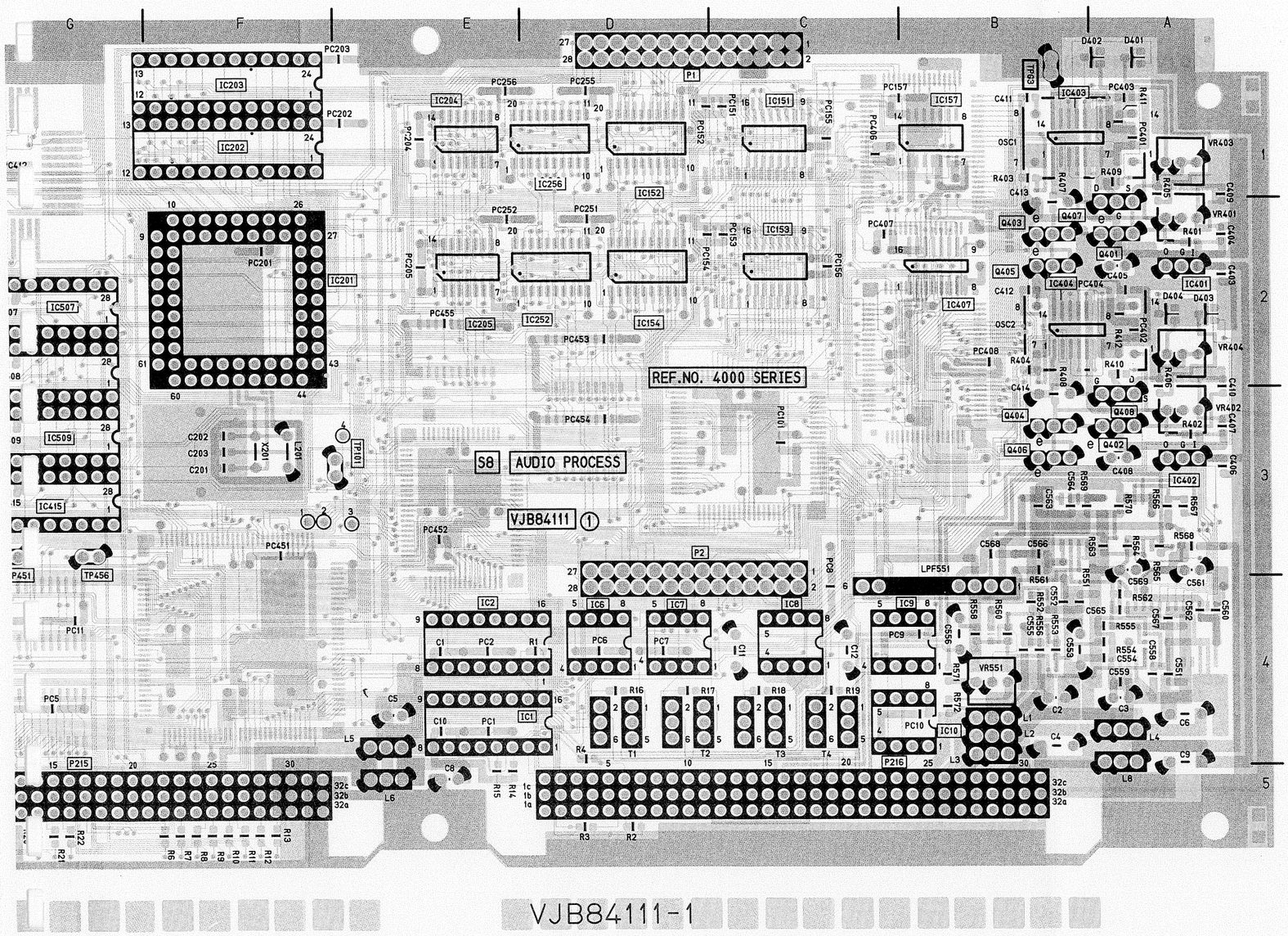

VJB84111-1

S8 AUDIO PROCESS					
Transistor			IC4404	B-2	Ⓕ
Q4401	A-2	Ⓒ	IC4406	B-1	Ⓒ
Q4402	A-3	Ⓒ	IC4407	B-2	Ⓕ
Q4403	B-2	Ⓒ	IC4408	B-2	Ⓒ
Q4404	B-3	Ⓒ	IC4410	H-1	Ⓒ
Q4405	B-2	Ⓒ	IC4412	G-1	Ⓒ
Q4406	B-3	Ⓒ	IC4413	I-2	Ⓕ
Q4407	A-1	Ⓒ	IC4414	H-2	Ⓕ
Q4408	A-2	Ⓒ	IC4415	G-3	Ⓒ
Integrated Circuits			IC4451	E-4	Ⓒ
IC4001	E-5	Ⓒ	IC4452	E-3	Ⓒ
IC4002	E-4	Ⓒ	IC4453	D-2	Ⓒ
IC4003	G-4	Ⓒ	IC4454	D-3	Ⓒ
IC4004	G-4	Ⓒ	IC4455	E-2	Ⓒ
IC4005	G-4	Ⓒ	IC4501	H-2	Ⓒ
IC4006	D-4	Ⓒ	IC4503	I-2	Ⓒ
IC4007	D-4	Ⓒ	IC4505	I-1	Ⓒ
IC4008	C-4	Ⓒ	IC4506	H-1	Ⓒ
IC4009	B-4	Ⓒ	IC4507	G-2	Ⓒ
IC4010	B-4	Ⓒ	IC4508	H-2	Ⓒ
IC4011	G-4	Ⓒ	IC4509	G-3	Ⓒ
IC4051	I-4	Ⓒ	IC4510	H-3	Ⓕ
IC4052	I-4	Ⓒ	IC4551	A-4	Ⓒ
IC4053	H-4	Ⓒ	IC4552	B-4	Ⓒ
IC4054	H-4	Ⓕ	IC4553	B-3	Ⓒ
IC4055	I-4	Ⓕ	IC4554	A-3	Ⓒ
IC4101	C-2	Ⓒ	**Test Points**		
IC4151	C-1	Ⓕ	TP4101	E-3	Ⓒ
IC4152	D-1	Ⓕ	TP4401	H-3	Ⓒ
IC4153	C-2	Ⓕ	TP4402	I-3	Ⓒ
IC4154	D-2	Ⓕ	TP4451	G-3	Ⓒ
IC4155	C-1	Ⓒ	TP4453	G-3	Ⓒ
IC4156	C-2	Ⓒ	TP4456	G-3	Ⓒ
IC4157	B-1	Ⓕ	TPG4001	I-5	Ⓒ
IC4201	F-2	Ⓒ	TPG4002	I-1	Ⓒ
IC4202	F-1	Ⓒ	TPG4003	B-1	Ⓒ
IC4203	F-1	Ⓒ	**Adjustments**		
IC4204	E-1	Ⓕ	VR4401	A-2	Ⓒ
IC4205	E-1	Ⓕ	VR4402	A-3	Ⓒ
IC4251	E-2	Ⓕ	VR4403	A-1	Ⓒ
IC4252	D-2	Ⓒ	VR4404	A-2	Ⓒ
IC4253	D-2	Ⓕ	VR4551	B-4	Ⓒ
IC4254	D-2	Ⓒ	**Connectors**		
IC4255	E-2	Ⓒ	P4001	D-1	Ⓒ
IC4256	D-1	Ⓒ	P4002	C-4	Ⓒ
IC4257	D-1	Ⓒ	P4215	G-4	Ⓒ
IC4258	E-1	Ⓒ	P4216	B-5	Ⓒ
IC4401	A-2	Ⓕ			
IC4402	A-3	Ⓒ			
IC4403	B-1	Ⓕ			

ADDRESS INFORMATION
Ⓒ ... COMPONENT SIDE
Ⓕ ... FOIL SIDE

S8 AUDIO PROCESS SUB P.C. BOARD (VEP84137A)

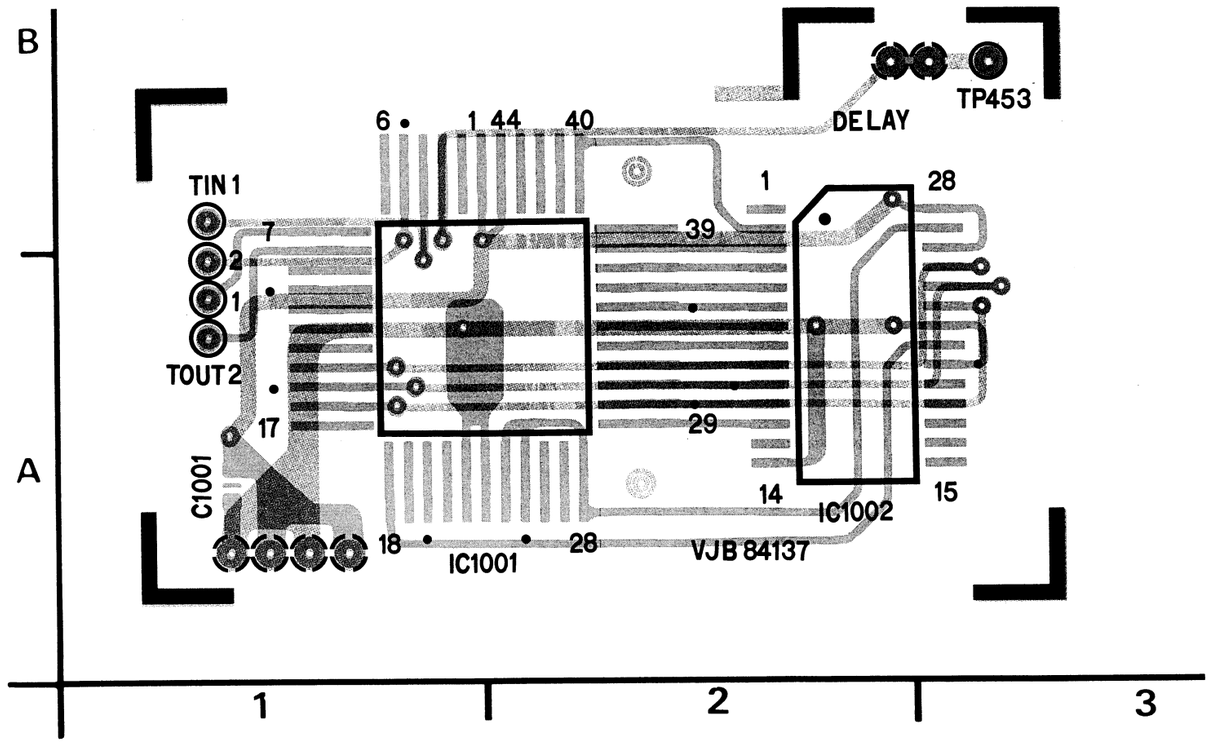

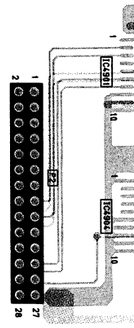

S8 AUDIO PROCESS SUB P.C. BOARD (VEP84142A)

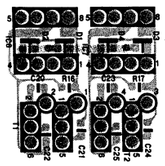

S9 VIDEO A/D PLL SUB P.C. BOARD (VEP88100B) [FOR PAL]

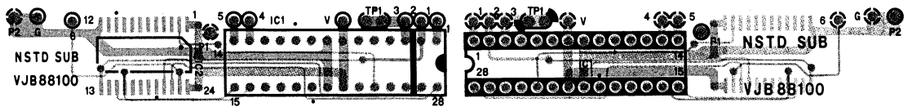

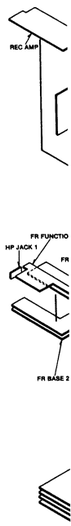

DIO PROCESS SUB P.C. BOARD (VEP84158C) [FOR NTSC] (VEP84158D) [FOR PAL]

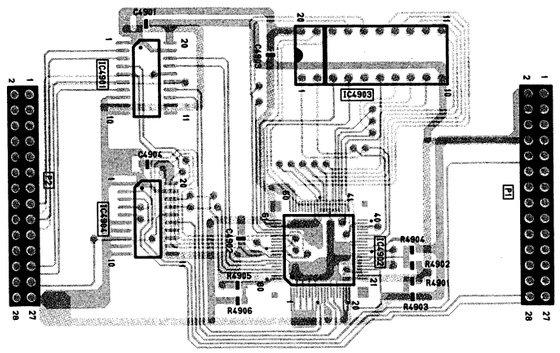

S9 VIDEO A/D PLL SUB P.C. BOARD (VEP88100B) [FOR PAL]

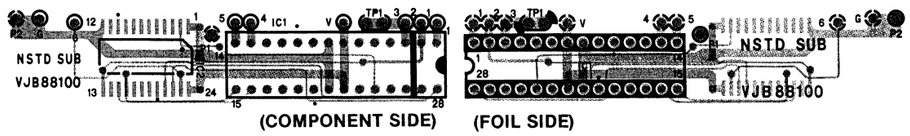

NTSC]
'AL]

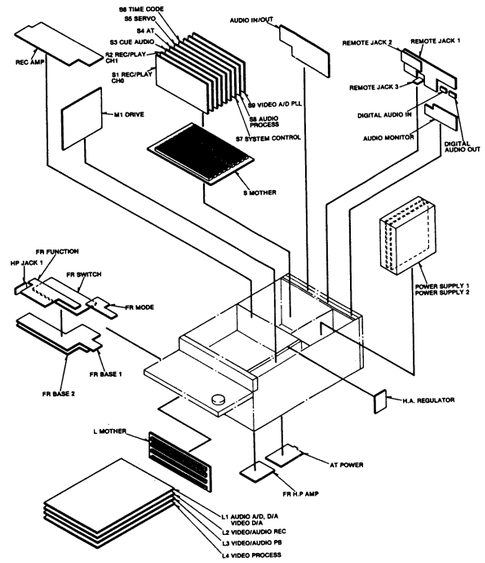

S9 VIDEO A/D PLL P.C. BOARD (VEP88073B) [FOR PAL]
(VEP88073A) [FOR NTSC]

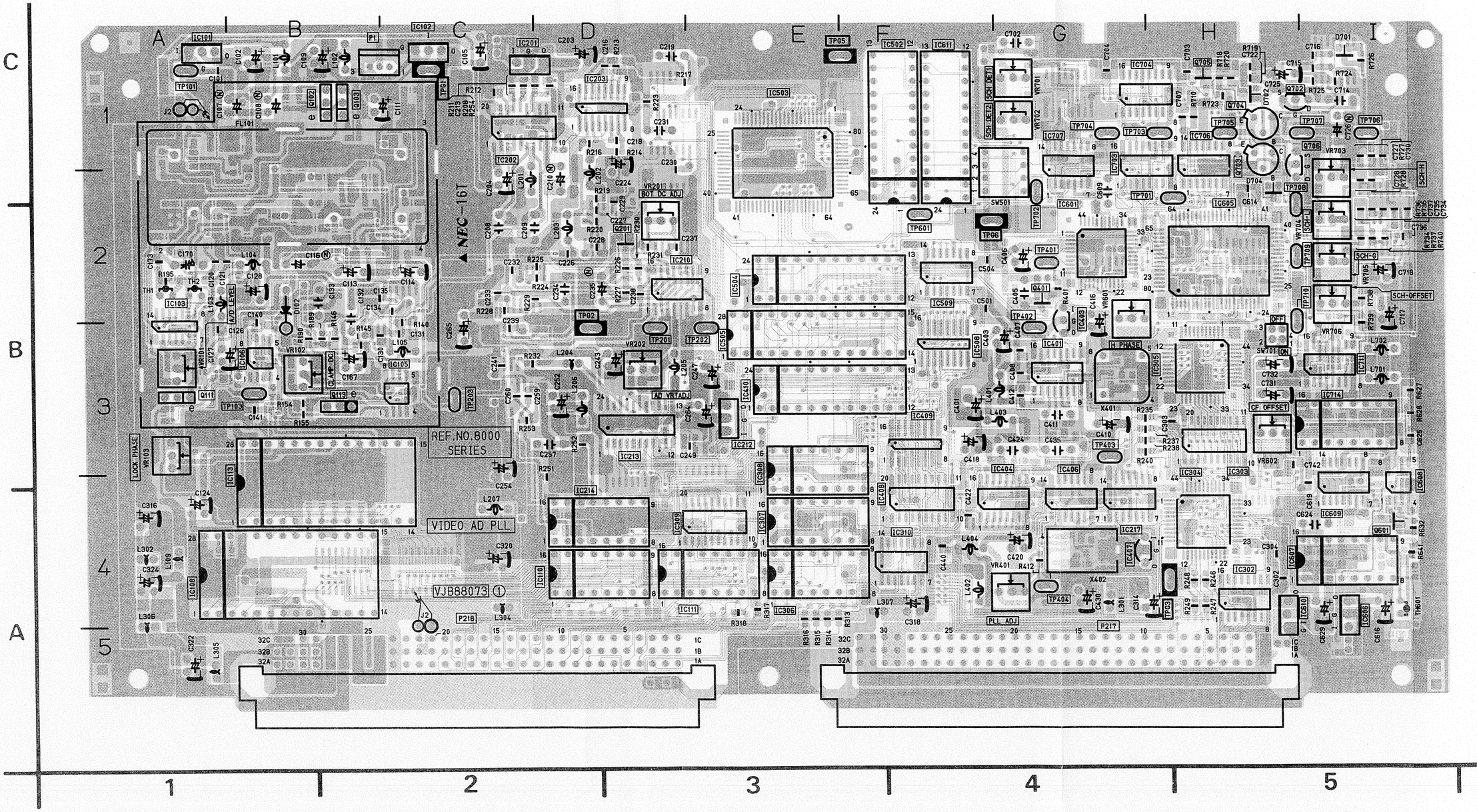

Effective Fr
Serial No.

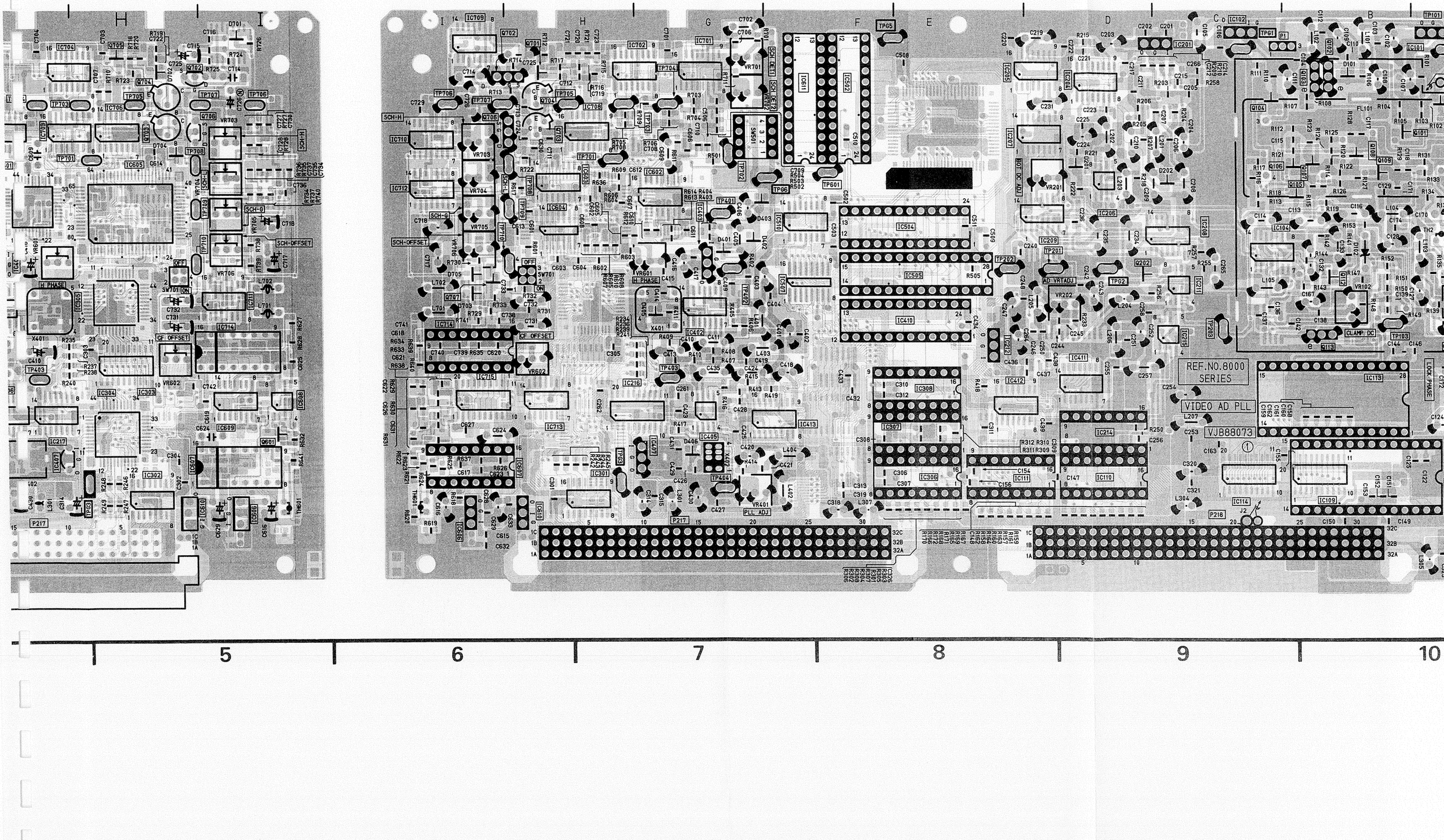

Effective From
Serial No. D2TMD .....
D2TMC .....

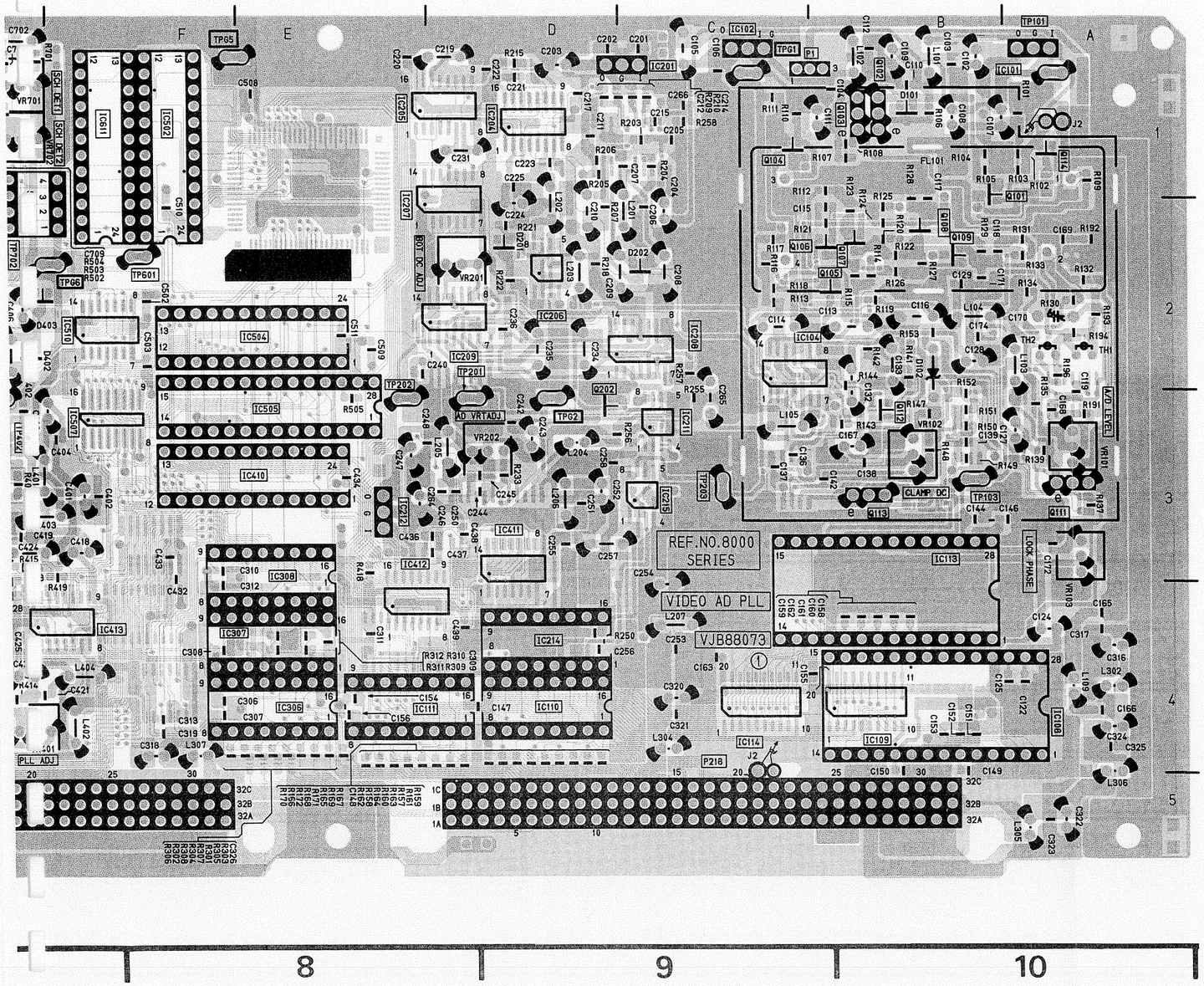

S9 VIDEO A/D PLL					
Transistors		IC8306	A-8 Ⓕ	TP8403	B-4 Ⓒ
Q8101	C-10 Ⓕ	IC8307	A-3 Ⓒ	TP8403	B-7 Ⓕ
Q8102	C-1 Ⓒ	IC8307	A-8 Ⓕ	TP8404	A-4 Ⓒ
Q8102	C-10 Ⓕ	IC8308	B-3 Ⓒ	TP8404	A-7 Ⓕ
Q8103	C-2 Ⓒ	IC8308	B-8 Ⓕ	TP8601	B-4 Ⓒ
Q8103	C-10 Ⓕ	IC8309	A-3 Ⓒ	TP8601	B-8 Ⓕ
Q8104	C-9 Ⓕ	IC8310	A-4 Ⓒ	TP8701	C-4 Ⓒ
Q8105	B-9 Ⓕ	IC8401	B-4 Ⓒ	TP8701	B-7 Ⓕ
Q8106	B-9 Ⓕ	IC8402	B-7 Ⓕ	TP8702	B-4 Ⓒ
Q8107	B-10 Ⓕ	IC8403	B-4 Ⓒ	TP8702	B-7 Ⓕ
Q8108	C-10 Ⓕ	IC8403	B-7 Ⓕ	TP8703	C-4 Ⓒ
Q8109	B-10 Ⓕ	IC8404	B-4 Ⓒ	TP8703	C-7 Ⓕ
Q8111	B-1 Ⓒ	IC8405	A-7 Ⓕ	TP8704	C-4 Ⓒ
Q8111	B-10 Ⓕ	IC8406	B-4 Ⓒ	TP8704	C-7 Ⓕ
Q8112	B-10 Ⓕ	IC8407	A-4 Ⓒ	TP8705	C-5 Ⓒ
Q8113	B-2 Ⓒ	IC8407	A-7 Ⓕ	TP8705	C-6 Ⓕ
Q8113	B-10 Ⓕ	IC8408	A-3 Ⓒ	TP8706	C-5 Ⓒ
Q8114	C-10 Ⓕ	IC8409	B-4 Ⓒ	TP8706	C-6 Ⓕ
Q8201	B-3 Ⓒ	IC8410	B-3 Ⓒ	TP8707	C-5 Ⓒ
Q8201	B-9 Ⓕ	IC8410	B-8 Ⓕ	TP8707	C-6 Ⓕ
Q8202	B-9 Ⓕ	IC8411	B-9 Ⓕ	TP8708	C-5 Ⓒ
Q8401	B-4 Ⓒ	IC8412	B-8 Ⓕ	TP8708	B-6 Ⓕ
Q8601	A-5 Ⓒ	IC8413	A-7 Ⓕ	TP8709	B-5 Ⓒ
Q8701	C-6 Ⓕ	IC8502	C-4 Ⓒ	TP8709	B-6 Ⓕ
Q8702	C-5 Ⓒ	IC8502	C-8 Ⓕ	TP8710	B-5 Ⓒ
Q8702	C-6 Ⓕ	IC8503	C-3 Ⓒ	TP8710	B-6 Ⓕ
Q8703	C-5 Ⓒ	IC8504	B-3 Ⓒ	TPG8001	C-2 Ⓒ
Q8703	C-6 Ⓕ	IC8504	B-8 Ⓕ	TPG8001	C-9 Ⓕ
Q8704	C-5 Ⓒ	IC8505	B-3 Ⓒ	TPG8002	B-2 Ⓒ
Q8704	C-6 Ⓕ	IC8505	B-8 Ⓕ	TPG8002	B-9 Ⓕ
Q8705	C-5 Ⓒ	IC8507	B-7 Ⓕ	TPG8003	A-4 Ⓒ
Q8706	C-5 Ⓒ	IC8508	B-4 Ⓒ	TPG8003	A-7 Ⓕ
Q8706	C-6 Ⓕ	IC8509	B-4 Ⓒ	TPG8005	C-3 Ⓒ
Q8707	B-6 Ⓕ	IC8510	B-7 Ⓕ	TPG8005	C-8 Ⓕ
Integrated Circuits		IC8601	B-4 Ⓒ	TPG8006	B-4 Ⓒ
IC8101	C-1 Ⓒ	IC8602	B-7 Ⓕ	TPG8006	B-7 Ⓕ
IC8101	C-10 Ⓕ	IC8603	B-7 Ⓕ	**Adjustments**	
IC8102	C-2 Ⓒ	IC8604	B-6 Ⓕ	VR8101	B-1 Ⓒ
IC8102	C-9 Ⓕ	IC8605	B-5 Ⓒ	VR8101	B-10 Ⓕ
IC8103	B-1 Ⓒ	IC8606	A-5 Ⓒ	VR8102	B-1 Ⓒ
IC8104	B-9 Ⓕ	IC8606	A-6 Ⓕ	VR8102	B-10 Ⓕ
IC8105	B-2 Ⓒ	IC8607	A-5 Ⓒ	VR8103	B-1 Ⓒ
IC8106	B-1 Ⓒ	IC8607	A-6 Ⓕ	VR8103	A-10 Ⓕ
IC8108	A-1 Ⓒ	IC8608	A-5 Ⓒ	VR8201	C-3 Ⓒ
IC8108	A-10 Ⓕ	IC8609	A-5 Ⓒ	VR8201	B-8 Ⓕ
IC8109	A-10 Ⓕ	IC8610	A-5 Ⓒ	VR8202	B-3 Ⓒ
IC8110	A-2 Ⓒ	IC8610	A-6 Ⓕ	VR8202	B-9 Ⓕ
IC8110	A-9 Ⓕ	IC8611	C-4 Ⓒ	VR8401	A-4 Ⓒ
IC8111	A-3 Ⓒ	IC8611	C-7 Ⓕ	VR8401	A-7 Ⓕ
IC8111	A-8 Ⓕ	IC8701	C-7 Ⓕ	VR8601	B-4 Ⓒ
IC8113	B-1 Ⓒ	IC8702	C-7 Ⓕ	VR8601	B-7 Ⓕ
IC8113	B-10 Ⓕ	IC8703	C-4 Ⓒ	VR8602	B-5 Ⓒ
IC8114	A-9 Ⓕ	IC8704	C-4 Ⓒ	VR8602	B-6 Ⓕ
IC8201	C-2 Ⓒ	IC8706	C-5 Ⓒ	VR8701	C-4 Ⓒ
IC8201	C-9 Ⓕ	IC8707	C-4 Ⓒ	VR8701	C-7 Ⓕ
IC8202	C-2 Ⓒ	IC8708	C-7 Ⓕ	VR8702	C-4 Ⓒ
IC8203	C-2 Ⓒ	IC8709	C-6 Ⓕ	VR8702	C-7 Ⓕ
IC8204	C-9 Ⓕ	IC8710	C-6 Ⓕ	VR8703	C-5 Ⓒ
IC8205	C-8 Ⓕ	IC8711	B-5 Ⓒ	VR8703	C-6 Ⓕ
IC8206	B-9 Ⓕ	IC8712	B-6 Ⓕ	VR8704	B-5 Ⓒ
IC8207	C-8 Ⓕ	IC8713	A-6 Ⓕ	VR8704	B-6 Ⓕ
IC8208	B-9 Ⓕ	IC8714	B-5 Ⓒ	VR8705	B-5 Ⓒ
IC8209	B-8 Ⓕ	IC8714	B-6 Ⓕ	VR8705	B-6 Ⓕ
IC8210	B-3 Ⓒ	IC8715	B-6 Ⓕ	VR8706	B-5 Ⓒ
IC8211	B-9 Ⓕ	**Test Points**		VR8706	B-6 Ⓕ
IC8212	B-3 Ⓒ	TP8101	C-1 Ⓒ	**Connectors**	
IC8212	B-8 Ⓕ	TP8101	C-10 Ⓕ	P8001	C-2 Ⓒ
IC8213	B-3 Ⓒ	TP8103	B-1 Ⓒ	P8001	C-9 Ⓕ
IC8214	A-2 Ⓒ	TP8103	B-10 Ⓕ	P8217	A-4 Ⓒ
IC8214	A-9 Ⓕ	TP8201	B-3 Ⓒ	P8217	A-7 Ⓕ
IC8215	B-9 Ⓕ	TP8201	B-8 Ⓕ	P8218	A-2 Ⓒ
IC8216	B-7 Ⓕ	TP8202	B-3 Ⓒ	P8218	A-9 Ⓕ
IC8217	A-4 Ⓒ	TP8202	B-8 Ⓕ	**Switches**	
IC8301	A-7 Ⓕ	TP8203	B-2 Ⓒ	SW501	B-4 Ⓒ
IC8302	A-5 Ⓒ	TP8203	B-9 Ⓕ	SW501	C-7 Ⓕ
IC8303	B-5 Ⓒ	TP8401	B-4 Ⓒ	SW701	B-5 Ⓒ
IC8304	B-5 Ⓒ	TP8401	B-7 Ⓕ	SW701	B-6 Ⓕ
IC8305	B-4 Ⓒ	TP8402	B-4 Ⓒ		
IC8306	A-3 Ⓒ	TP8402	B-7 Ⓕ		

ADDRESS INFORMATION
Ⓒ... COMPONENT SIDE
Ⓕ... FOIL SIDE

L MOTHER P.C. BOARD (VEP80586B)

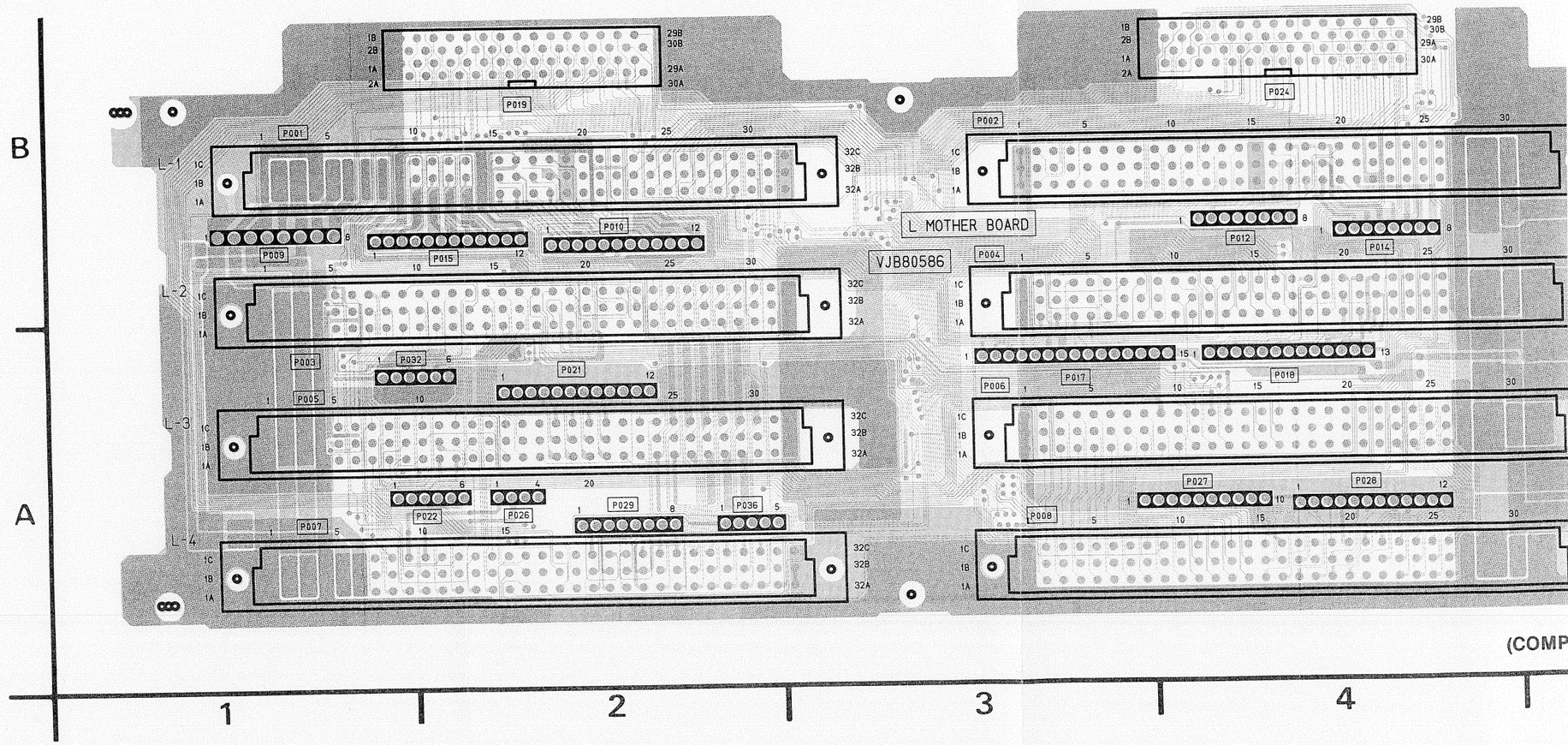

(COMP

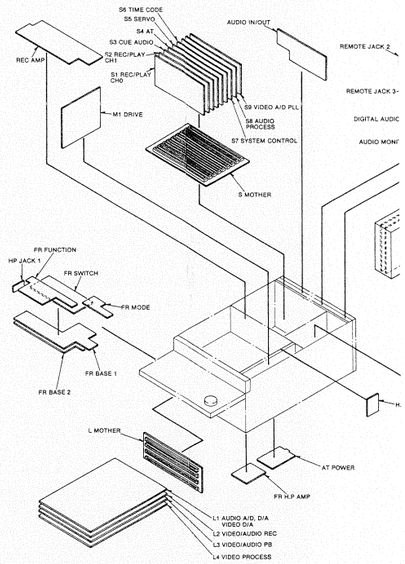
S6 TIME CODE
S5 SERVO
S4 AT
S3 CUE AUDIO
S2 REC/PLAY CH1
S1 REC/PLAY CH0
REC AMP
AUDIO IN/OUT
REMOTE JACK 2
REMOTE JACK 3
DIGITAL AUDIC
AUDIO MONI
M1 DRIVE
S9 VIDEO A/D PLL
S8 AUDIO PROCESS
S7 SYSTEM CONTROL
S MOTHER
FR FUNCTION
HP JACK 1
FR SWITCH
FR MODE
FR BASE 1
FR BASE 2
L MOTHER
AT POWER
FR H.P AMP
L1 AUDIO A/D, D/A
VIDEO D/A
L2 VIDEO/AUDIO REC
L3 VIDEO/AUDIO PB
L4 VIDEO PROCESS

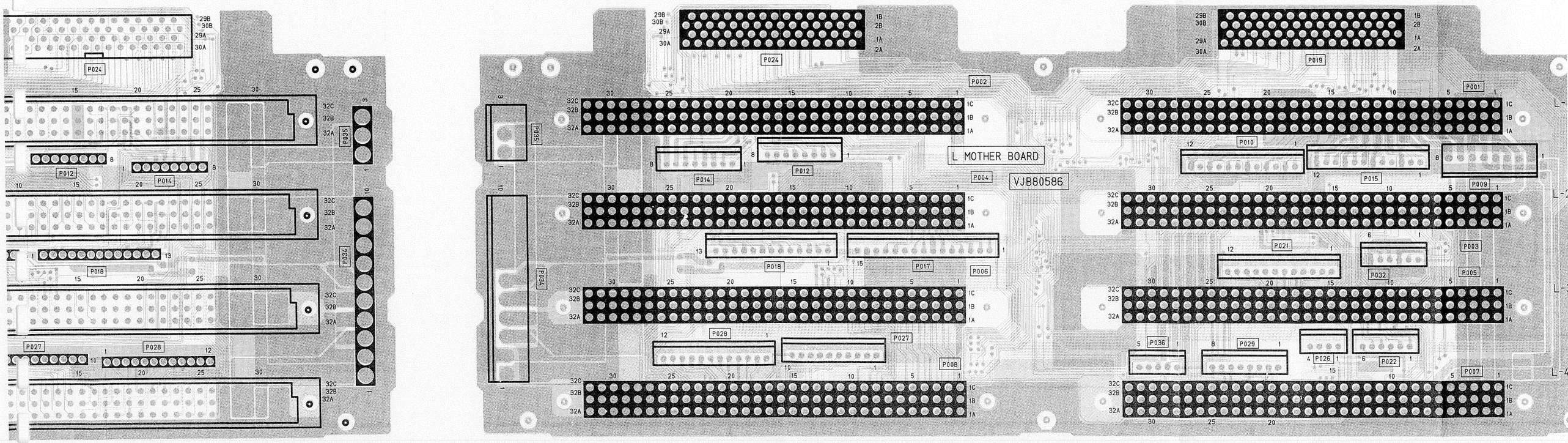
L MOTHER BOARD
VJB80586
P024
P002
P019
P001
P035
P012
P014
P004
P010
P015
P009
P018
P017
P006
P021
P032
P003
P005
P028
P027
P008
P036
P029
P026
P022
P007
P034
29B
30B
29A
30A
1B
2B
1A
2A
32C
32B
32A
1C
1B
1A
(COMPONENT SIDE)
(FOIL SIDE)
4
5
6
7
8
9

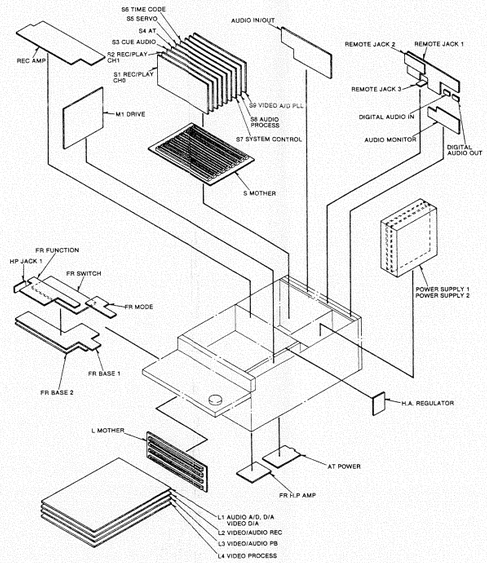

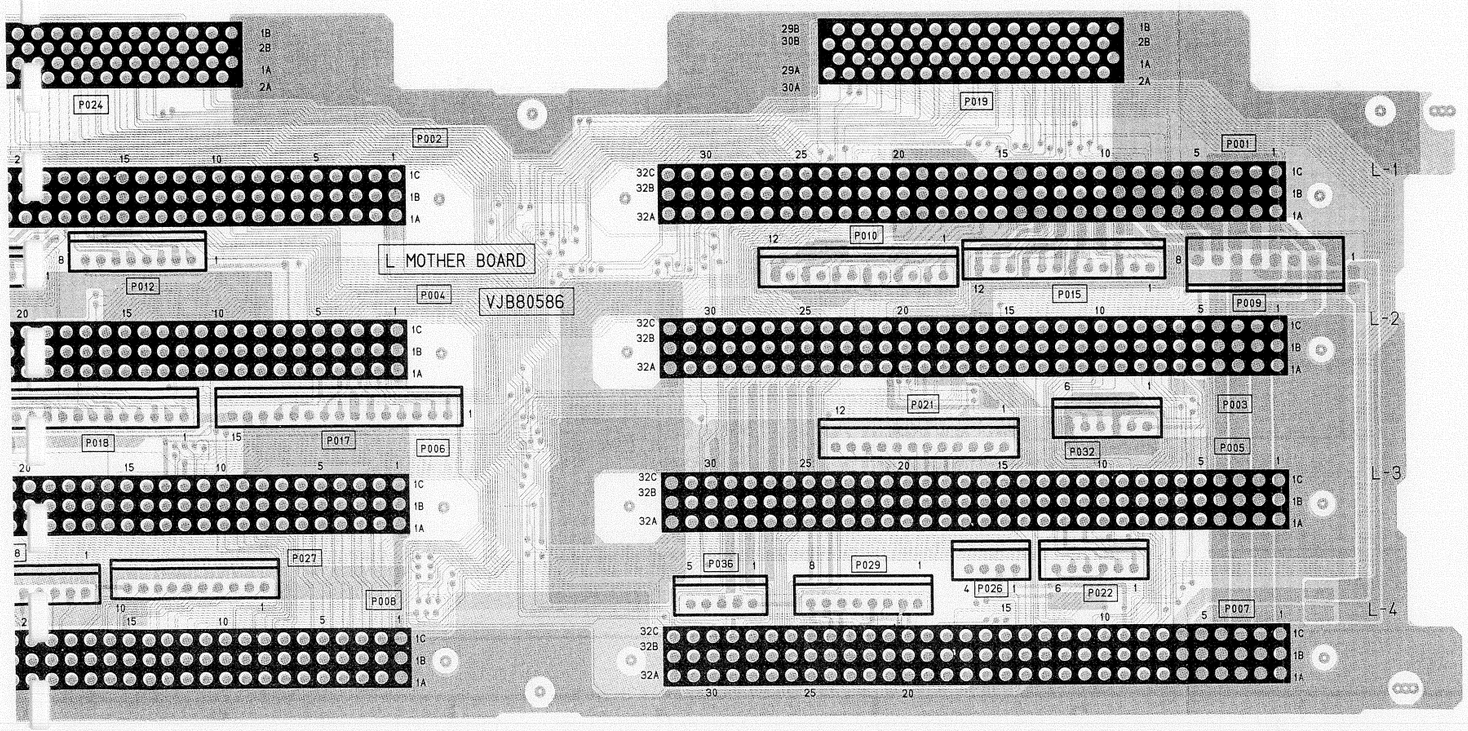

L MOTHER	
Connectors	
P001	B-1 Ⓒ
P001	B-9 Ⓕ
P002	B-3 Ⓒ
P002	B-7 Ⓕ
P003	A-1 Ⓒ
P003	B-9 Ⓕ
P004	B-3 Ⓒ
P004	B-7 Ⓕ
P005	A-1 Ⓒ
P005	A-9 Ⓕ
P006	A-3 Ⓒ
P006	A-7 Ⓕ
P007	A-1 Ⓒ
P007	A-9 Ⓕ
P008	A-3 Ⓒ
P008	A-7 Ⓕ
P009	B-1 Ⓒ
P009	B-9 Ⓕ
P010	B-2 Ⓒ
P010	B-8 Ⓕ
P012	B-4 Ⓒ
P012	B-7 Ⓕ
P014	B-4 Ⓒ
P014	B-6 Ⓕ
P015	B-2 Ⓒ
P015	B-9 Ⓕ
P017	A-3 Ⓒ
P017	A-7 Ⓕ
P018	A-4 Ⓒ
P018	A-6 Ⓕ
P019	B-2 Ⓒ
P019	B-8 Ⓕ
P021	A-2 Ⓒ
P021	A-8 Ⓕ
P022	A-2 Ⓒ
P022	A-9 Ⓕ
P024	B-4 Ⓒ
P024	B-6 Ⓕ
P026	A-2 Ⓒ
P026	A-9 Ⓕ
P027	A-4 Ⓒ
P027	A-7 Ⓕ
P028	A-4 Ⓒ
P028	A-6 Ⓕ
P029	A-2 Ⓒ
P029	A-8 Ⓕ
P032	A-2 Ⓒ
P032	A-9 Ⓕ
P034	A-5 Ⓒ
P034	A-6 Ⓕ
P035	B-6 Ⓒ
P035	B-6 Ⓕ
P036	A-2 Ⓒ
P036	A-8 Ⓕ

ADDRESS INFORMATION
Ⓒ... COMPONENT SIDE
Ⓕ... FOIL SIDE

S MOTHER P.C. BOARD (VEP80593A)

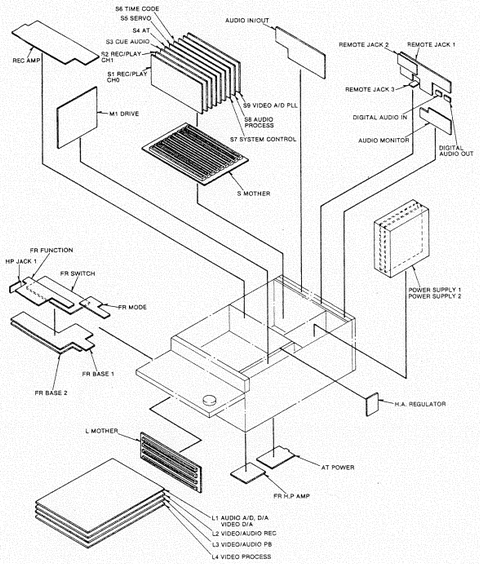

S MOTHER

Connectors					
P201	A-4	Ⓒ	P233	C-5	Ⓒ
P201	A-7	Ⓕ	P233	C-6	Ⓕ
P202	A-2	Ⓒ	P235	B-2	Ⓒ
P202	A-9	Ⓕ	P235	B-9	Ⓕ
P203	A-4	Ⓒ	P236	C-4	Ⓒ
P203	A-7	Ⓕ	P236	C-6	Ⓕ
P204	A-2	Ⓒ	P237	C-4	Ⓒ
P204	A-9	Ⓕ	P237	C-7	Ⓕ
P205	B-4	Ⓒ	P238	C-3	Ⓒ
P205	B-7	Ⓕ	P238	C-8	Ⓕ
P206	B-2	Ⓒ	P240	C-2	Ⓒ
P206	B-9	Ⓕ	P240	C-9	Ⓕ
P207	B-4	Ⓒ	P241	C-5	Ⓒ
P207	B-7	Ⓕ	P241	D-6	Ⓕ
P208	B-2	Ⓒ	P242	B-5	Ⓒ
P208	B-9	Ⓕ	P242	B-6	Ⓕ
P209	C-4	Ⓒ	P245	C-4	Ⓒ
P209	C-7	Ⓕ	P245	C-7	Ⓕ
P210	C-2	Ⓒ	P246	C-3	Ⓒ
P210	C-9	Ⓕ	P246	C-8	Ⓕ
P211	C-4	Ⓒ	P247	C-2	Ⓒ
P211	C-7	Ⓕ	P247	C-2	Ⓕ
P212	C-2	Ⓒ	P248	D-5	Ⓒ
P212	C-9	Ⓕ	P248	D-6	Ⓕ
P213	C-4	Ⓒ	P249	D-2	Ⓒ
P213	C-7	Ⓕ	P249	D-9	Ⓕ
P214	C-1	Ⓒ	P251	C-2	Ⓒ
P214	C-9	Ⓕ	P251	C-9	Ⓕ
P215	D-4	Ⓒ	P253	D-1	Ⓒ
P215	D-7	Ⓕ	P253	D-10	Ⓕ
P216	D-2	Ⓒ	P255	B-1	Ⓒ
P216	D-9	Ⓕ	P255	B-10	Ⓕ
P217	D-4	Ⓒ	P256	C-2	Ⓒ
P217	D-7	Ⓕ	P256	C-9	Ⓕ
P218	D-2	Ⓒ	P257	A-5	Ⓒ
P218	D-9	Ⓕ	P257	A-6	Ⓕ
P219	A-2	Ⓒ	P258	B-2	Ⓒ
P219	A-9	Ⓕ	P258	B-9	Ⓕ
P220	A-2	Ⓒ	P259	C-1	Ⓒ
P220	A-9	Ⓕ	P259	C-10	Ⓕ
P221	A-4	Ⓒ	P260	C-4	Ⓒ
P221	A-7	Ⓕ	P260	C-7	Ⓕ
P222	A-5	Ⓒ	P261	C-5	Ⓒ
P222	A-6	Ⓕ	P261	C-6	Ⓕ
P224	A-2	Ⓒ	P263	B-5	Ⓒ
P224	A-8	Ⓕ	P263	B-6	Ⓕ
P226	A-4	Ⓒ	P268	D-4	Ⓒ
P226	B-7	Ⓕ	P268	D-7	Ⓕ
P227	B-4	Ⓒ	P269	D-3	Ⓒ
P227	A-7	Ⓕ	P269	D-8	Ⓕ
P228	B-5	Ⓒ	P270	D-2	Ⓒ
P228	B-7	Ⓕ	P270	D-9	Ⓕ
P229	B-4	Ⓒ	P272	A-2	Ⓒ
P229	B-7	Ⓕ	P272	A-9	Ⓕ
P230	A-2	Ⓒ	P277	A-2	Ⓒ
P230	A-9	Ⓕ	P277	A-9	Ⓕ
P231	A-2	Ⓒ	P278	A-1	Ⓒ
P231	A-9	Ⓕ	P278	B-10	Ⓕ
P232	B-4	Ⓒ	P290	B-4	Ⓒ
P232	B-7	Ⓕ	P290	B-7	Ⓕ

ADDRESS INFORMATION
Ⓒ ... COMPONENT SIDE
Ⓕ ... FOIL SIDE

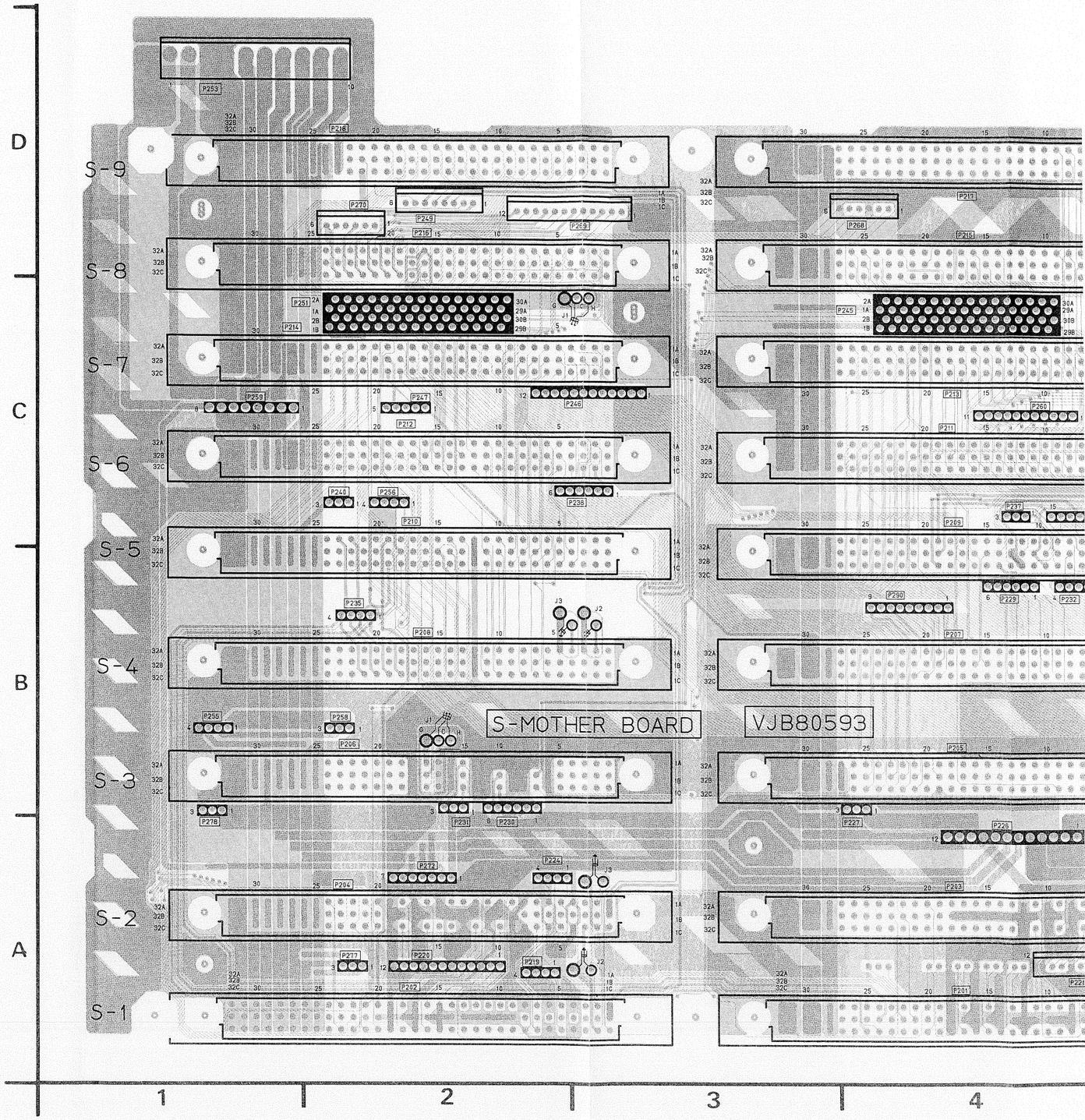

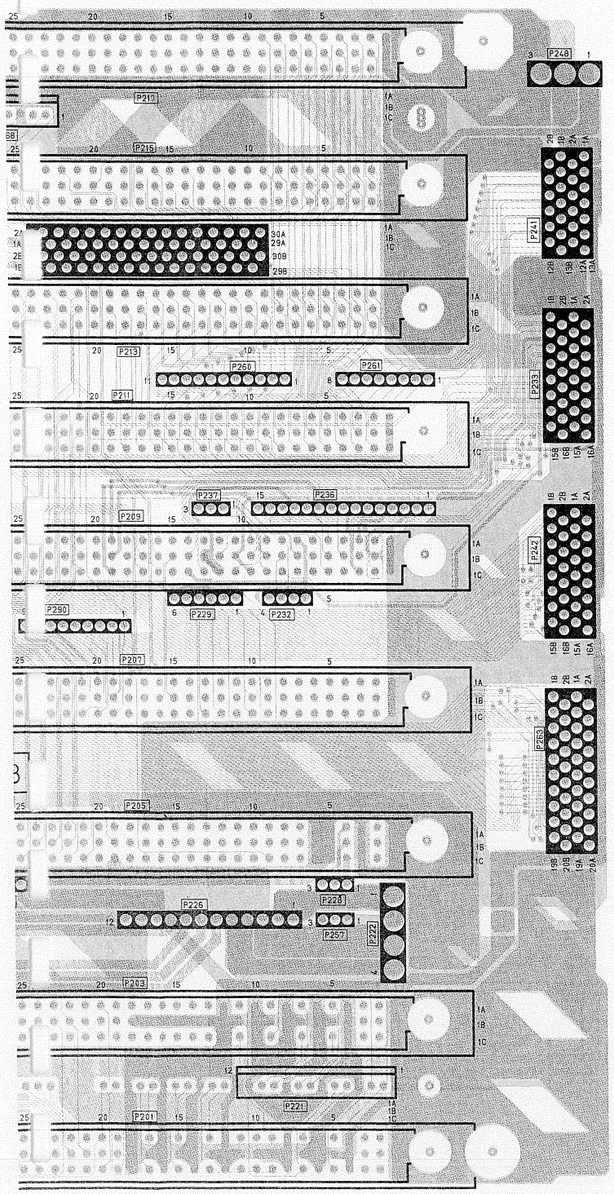
(COMPONENT SIDE)

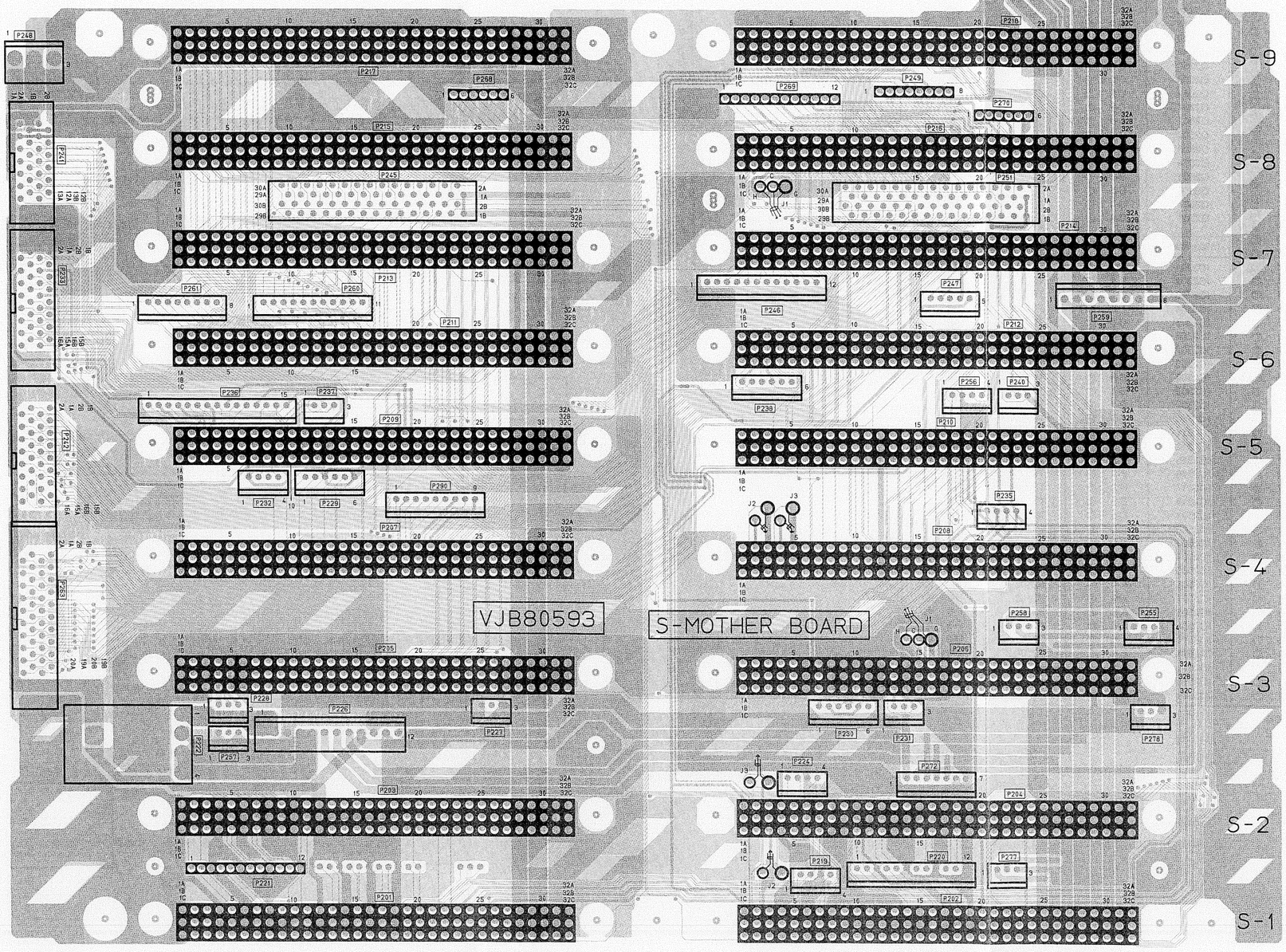
VJB80593
S-MOTHER BOARD
S-9
S-8
S-7
S-6
S-5
S-4
S-3
S-2
S-1
(FOIL SIDE)

4 5 6 7 8 9 10

M1 DRIVE P.C. BOARD (VEP82068A)

M1 DRIVE

Transistors

Q2301	C-5	©
Q2301	G-5	Ⓕ
Q2302	G-5	©
Q2302	G-5	Ⓕ
Q2303	G-5	©
Q2303	G-5	Ⓕ
Q2304	G-5	©
Q2304	G-5	Ⓕ
Q2305	G-5	©
Q2307	D-4	©
Q2307	D-4	Ⓕ
Q2308	E-4	©
Q2308	E-4	Ⓕ
Q2309	D-4	©
Q2309	D-4	Ⓕ
Q2310	F-5	©
Q2310	F-5	Ⓕ
Q2311	E-5	©
Q2311	E-5	Ⓕ
Q2312	E-5	©
Q2312	E-5	Ⓕ
Q2313	D-4	©
Q2313	D-4	Ⓕ
Q2316	D-5	Ⓕ
Q2320	E-3	©
Q2320	E-3	Ⓕ
Q2321	C-4	©
Q2321	C-4	Ⓕ
Q2322	E-3	©
Q2322	E-3	Ⓕ
Q2323	F-2	©
Q2324	B-3	©
Q2324	B-3	Ⓕ
Q2325	A-3	©
Q2325	A-3	Ⓕ
Q2326	A-3	©
Q2326	A-3	Ⓕ
Q2327	F-2	©
Q2327	F-2	Ⓕ
Q2328	B-2	©
Q2328	B-2	Ⓕ
Q2329	A-2	©
Q2329	A-2	Ⓕ
Q2330	A-2	©
Q2330	A-2	Ⓕ
Q2331	C-4	©
Q2331	C-4	Ⓕ
Q2332	E-2	©
Q2332	E-2	Ⓕ
Q2340	A-3	©
Q2340	A-3	Ⓕ
Q2341	B-3	©
Q2341	B-3	Ⓕ
Q2342	B-3	©
Q2342	B-3	Ⓕ
Q2343	D-3	©
Q2343	D-3	Ⓕ
Q2344	C-3	©
Q2344	C-3	Ⓕ
Q2345	C-3	©
Q2345	C-3	Ⓕ
Q2346	A-2	©
Q2346	A-2	Ⓕ
Q2347	B-2	©
Q2347	B-2	Ⓕ
Q2348	B-2	©
Q2348	B-2	Ⓕ
Q2349	D-2	©
Q2349	D-2	Ⓕ
Q2350	C-2	©
Q2350	C-2	Ⓕ
Q2351	C-2	©
Q2351	C-2	Ⓕ
Q2501	B-4	Ⓕ
Q2502	B-4	Ⓕ
Q2503	B-4	Ⓕ
Q2504	B-5	©
Q2505	B-5	©
Q2506	B-5	©
Q2507	B-4	©
Q2507	B-4	Ⓕ

Integrated Circuits

IC2301	F-5	©
IC2302	E-6	©
IC2303	G-5	Ⓕ
IC2304	F-6	©
IC2305	G-5	Ⓕ
IC2306	G-5	Ⓕ
IC2307	C-5	©
IC2308	G-4	©
IC2308	G-4	Ⓕ
IC2309	E-4	©
IC2309	E-4	Ⓕ
IC2310	F-5	©
IC2311	E-3	©
IC2312	E-2	©
IC2315	F-3	©
IC2316	F-2	©
IC2317	F-2	©
IC2318	E-2	©
IC2501	C-5	©
IC2502	B-5	©
IC2503	B-5	©
IC2504	B-5	©
IC2505	B-5	©
IC2506	A-6	Ⓕ
IC2507	A-6	Ⓕ
IC2508	A-5	Ⓕ
IC2509	A-6	©
IC2510	A-5	©
IC2511	B-6	Ⓕ
IC2512	A-5	Ⓕ
IC2513	A-5	Ⓕ
IC2514	A-5	Ⓕ

Test Points

TP2305	D-4	©
TP2305	D-4	Ⓕ
TP2316	D-4	©
TP2316	D-4	Ⓕ
TP2324	F-1	©
TP2324	F-1	Ⓕ
TP2325	E-2	©
TP2325	E-2	Ⓕ
TP2326	E-2	©
TP2326	E-2	Ⓕ
TP2327	D-2	©
TP2327	D-2	Ⓕ
TP2328	B-3	©
TP2328	B-3	Ⓕ
TP2329	F-2	©
TP2329	F-2	Ⓕ
TP2330	E-1	©
TP2330	E-1	Ⓕ
TP2331	E-1	©
TP2331	E-1	Ⓕ
TP2332	E-1	©
TP2332	E-1	Ⓕ
TP2333	D-1	©
TP2333	D-1	Ⓕ
TP2334	B-2	©
TP2334	B-2	Ⓕ
TP2335	E-2	©
TP2335	E-2	Ⓕ
TP2336	F-2	©
TP2336	F-2	Ⓕ
TP2337	F-3	©
TP2337	F-3	Ⓕ
TP2339	F-3	©
TP2339	F-3	Ⓕ
TP2340	F-3	©
TP2340	F-3	Ⓕ
TP2341	B-3	©
TP2341	B-3	Ⓕ
TP2342	B-2	©
TP2342	B-2	Ⓕ
TPG2001	G-6	©
TPG2001	G-6	Ⓕ
TPG2002	G-6	©
TPG2002	G-6	Ⓕ

Connectors

P2101	C-6	©
P2101	C-6	Ⓕ
P2102	E-6	©
P2102	E-6	Ⓕ
P2103	F-6	©
P2103	F-6	Ⓕ
P2104	G-2	©
P2104	G-2	Ⓕ

ADDRESS INFORMATION
© ... COMPONENT SIDE
Ⓕ ... FOIL SIDE

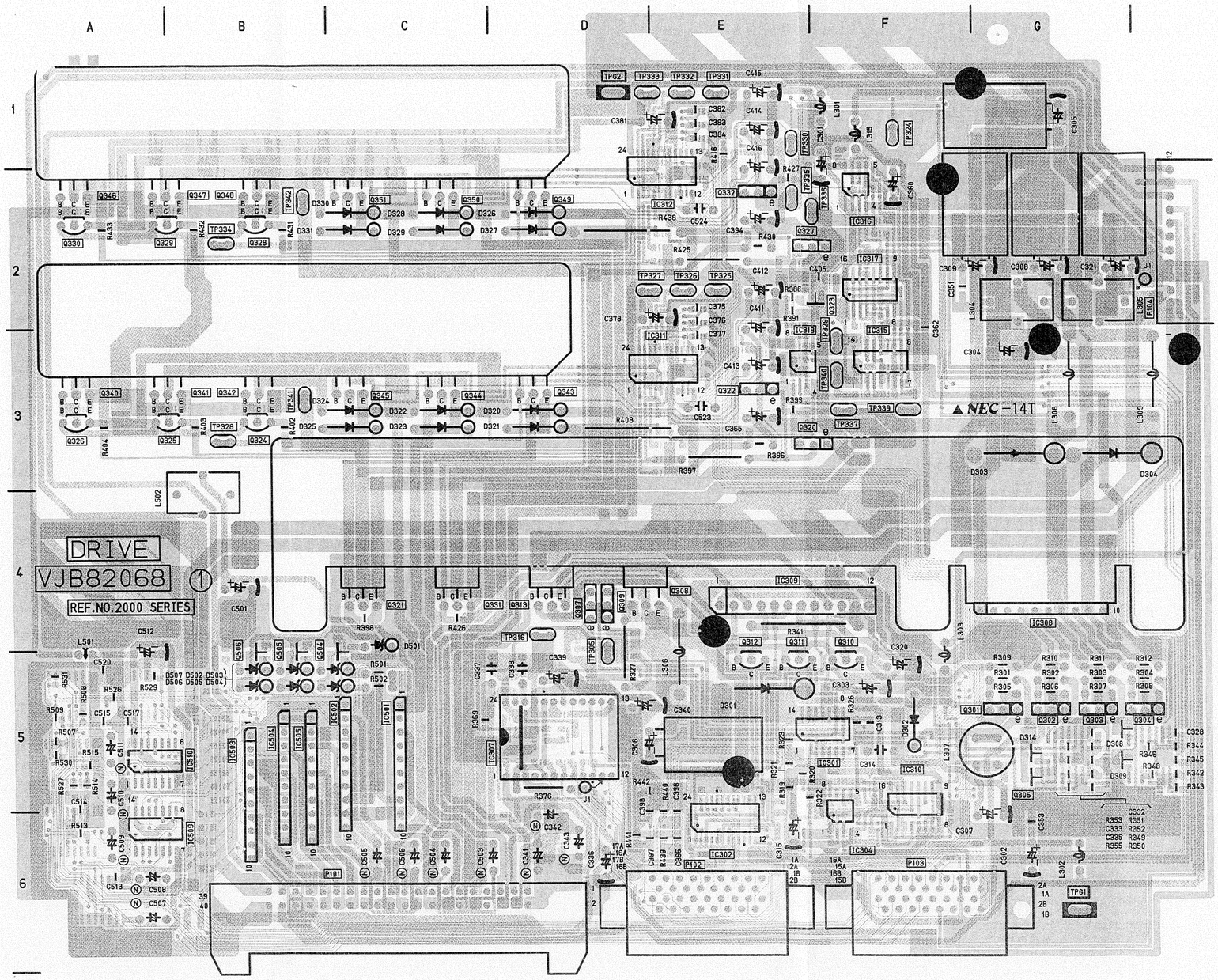

(COMPONENT SIDE)

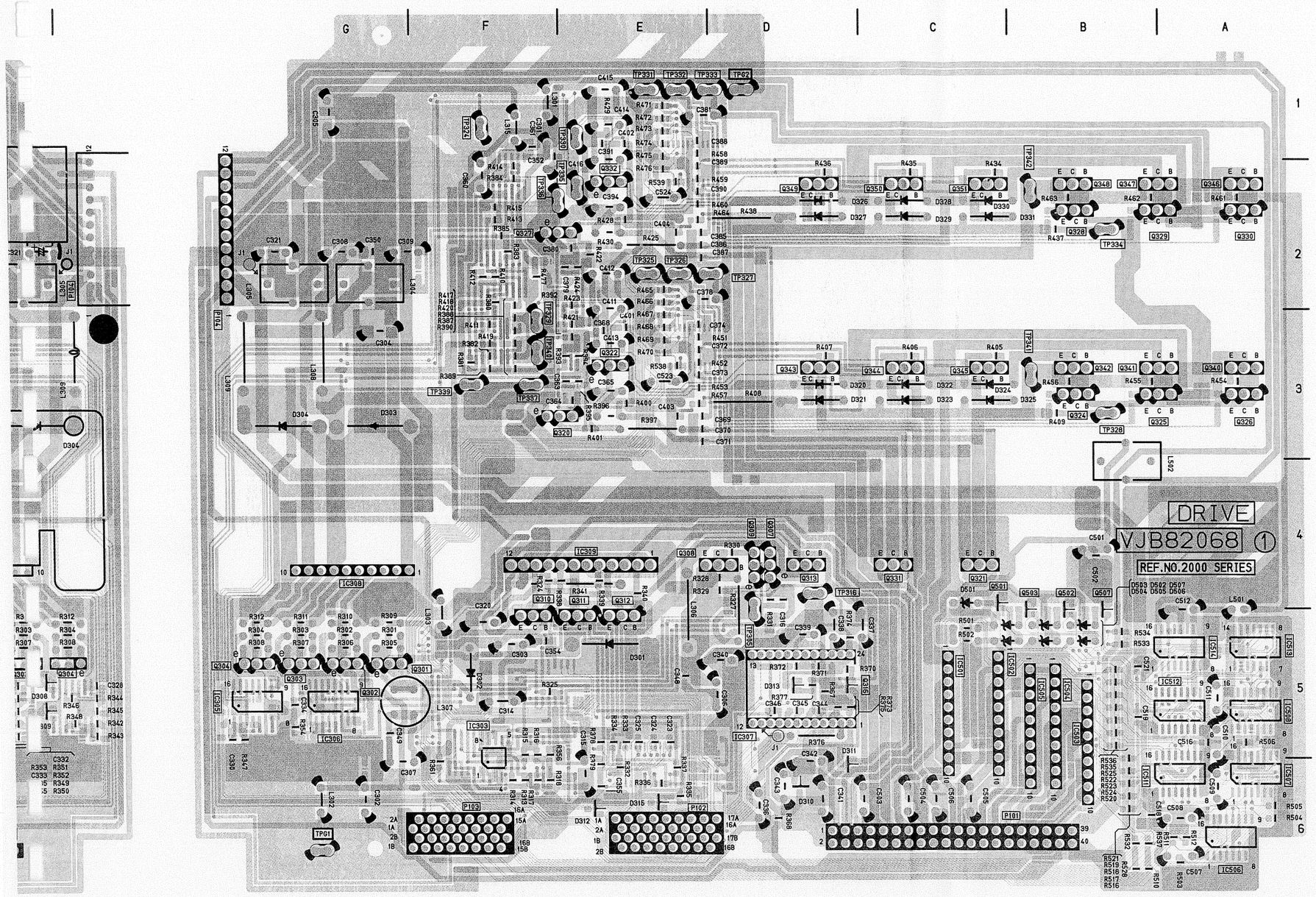
DRIVE
VJB82068 ①
REF.NO.2000 SERIES
G
F
E
D
C
B
A
1
2
3
4
5
6
IC308
IC309
IC306
IC307
IC303
IC305
P103
P102
P101
TP62
TP324
TP331
TP332
TP333
TP335
TP336
TP337
TP338
TP339
TP340
TP325
TP326
TP327
TP328
TP329
TP334
TP316
TP317
TP318
TP319
TP320
TP321
TP322
TP323
TP1
L301
L302
L303
L304
L305
L306
L307
L308
L309
L310
L311
L312
L313
L314
L315
L316
L317
L318
L319
L320
L321
L322
L323
L324
L325
L326
L327
L328
L329
L330
L331
L332
L333
L334
L335
L336
L337
L338
L339
L340

REC AMP P.C. BOARD (VEP85023A)

REC AMP

Transistors

Q5001	B-12 Ⓕ
Q5002	B-12 Ⓒ
Q5002	B-12 Ⓕ
Q5003	B-12 Ⓒ
Q5003	B-12 Ⓕ
Q5004	B-12 Ⓒ
Q5004	B-12 Ⓕ
Q5005	B-12 Ⓕ
Q5006	B-13 Ⓕ
Q5007	B-13 Ⓕ
Q5008	B-13 Ⓕ
Q5009	B-2 Ⓒ
Q5010	B-2 Ⓒ
Q5010	B-12 Ⓕ
Q5011	B-2 Ⓒ
Q5011	B-12 Ⓕ
Q5012	B-2 Ⓒ
Q5012	B-12 Ⓕ
Q5013	B-2 Ⓒ
Q5013	B-13 Ⓕ
Q5014	B-2 Ⓒ
Q5014	B-12 Ⓕ
Q5015	B-1 Ⓒ
Q5015	B-13 Ⓕ
Q5016	B-1 Ⓒ
Q5016	B-13 Ⓕ
Q5017	B-2 Ⓒ
Q5017	B-12 Ⓕ
Q5018	B-2 Ⓒ
Q5018	B-12 Ⓕ
Q5019	B-1 Ⓒ
Q5019	B-13 Ⓕ
Q5020	B-1 Ⓒ
Q5020	B-1 Ⓕ
Q5021	B-12 Ⓕ
Q5022	B-12 Ⓕ
Q5023	B-12 Ⓕ
Q5024	B-12 Ⓕ
Q5025	B-11 Ⓕ
Q5026	B-11 Ⓕ
Q5027	A-12 Ⓕ
Q5028	A-12 Ⓕ
Q5029	A-12 Ⓕ
Q5030	A-13 Ⓕ
Q5031	B-13 Ⓕ
Q5032	B-1 Ⓒ
Q5033	B-13 Ⓕ
Q5034	B-1 Ⓒ
Q5035	B-11 Ⓕ
Q5036	B-11 Ⓕ
Q5037	A-9 Ⓕ
Q5038	A-9 Ⓕ
Q5200	A-8 Ⓕ
Q5201	A-6 Ⓒ
Q5202	A-8 Ⓕ
Q5203	A-7 Ⓒ
Q5204	A-7 Ⓒ
Q5204	A-7 Ⓕ
Q5205	A-7 Ⓕ
Q5206	A-7 Ⓕ
Q5207	A-8 Ⓕ

Integrated Circuits

IC5001	B-3 Ⓒ
IC5001	B-11 Ⓕ
IC5002	B-3 Ⓒ
IC5002	B-11 Ⓕ
IC5003	A-10 Ⓕ
IC5004	A-10 Ⓕ
IC5005	A-11 Ⓕ
IC5006	A-11 Ⓕ
IC5007	A-11 Ⓕ
IC5008	B-1 Ⓒ
IC5009	B-11 Ⓕ
IC5010	B-3 Ⓒ
IC5011	A-3 Ⓒ
IC5012	B-11 Ⓕ
IC5013	B-11 Ⓕ
IC5014	B-11 Ⓕ
IC5015	B-11 Ⓕ
IC5016	B-11 Ⓕ
IC5017	A-10 Ⓕ
IC5018	B-11 Ⓕ
IC5019	A-10 Ⓕ
IC5020	A-9 Ⓕ
IC5021	A-5 Ⓒ
IC5200	A-6 Ⓒ
IC5200	A-8 Ⓕ
IC5201	A-5 Ⓒ
IC5201	A-9 Ⓕ
IC5202	A-5 Ⓒ
IC5202	A-9 Ⓕ
IC5203	B-5 Ⓒ
IC5203	B-9 Ⓕ
IC5204	B-5 Ⓒ
IC5204	B-9 Ⓕ
IC5205	B-6 Ⓒ
IC5205	B-8 Ⓕ
IC5206	A-7 Ⓒ
IC5207	B-8 Ⓕ
IC5208	B-8 Ⓕ
IC5210	B-8 Ⓕ
IC5211	B-7 Ⓕ
IC5213	B-6 Ⓒ
IC5214	B-8 Ⓕ
IC5215	B-8 Ⓕ
IC5216	A-7 Ⓒ
IC5216	A-7 Ⓕ

Test Points

TP5001	A-3 Ⓒ
TP5001	A-11 Ⓕ
TP5002	A-3 Ⓒ
TP5002	A-11 Ⓕ
TP5003	B-2 Ⓒ
TP5003	B-12 Ⓕ
TP5004	B-2 Ⓒ
TP5004	B-12 Ⓕ
TP5005	B-2 Ⓒ
TP5005	B-12 Ⓕ
TP5006	B-2 Ⓒ
TP5006	B-12 Ⓕ
TP5007	B-1 Ⓒ
TP5007	B-13 Ⓕ
TP5008	B-1 Ⓒ
TP5008	B-13 Ⓕ
TP5009	B-2 Ⓒ
TP5010	B-1 Ⓒ
TP5010	B-13 Ⓕ
TP5011	B-3 Ⓒ
TP5011	B-11 Ⓕ
TP5012	B-3 Ⓒ
TP5012	B-11 Ⓕ
TP5200	A-6 Ⓒ
TP5200	A-8 Ⓕ
TP5201	A-5 Ⓒ
TP5201	A-9 Ⓕ
TP5202	A-5 Ⓒ
TP5202	A-8 Ⓕ
TP5203	B-6 Ⓒ
TP5203	B-9 Ⓕ
TP5204	B-6 Ⓒ
TP5204	B-8 Ⓕ
TP5205	A-7 Ⓒ
TP5205	A-8 Ⓕ
TP5206	A-7 Ⓒ
TP5206	A-7 Ⓕ
TP5207	B-7 Ⓒ
TP5207	B-7 Ⓕ
TPG5000	B-2 Ⓒ
TPG5000	B-2 Ⓒ
TPG5000	B-12 Ⓕ
TPG5001	B-1 Ⓒ
TPG5001	B-13 Ⓕ
TPG5200	B-6 Ⓒ
TPG5201	B-7 Ⓒ
TPG5201	B-7 Ⓕ

Adjustments

VR5002	A-3 Ⓒ
VR5002	A-12 Ⓕ
VR5004	A-2 Ⓒ
VR5004	A-12 Ⓕ
VR5005	A-3 Ⓒ
VR5005	B-11 Ⓕ
VR5007	A-2 Ⓒ
VR5007	A-12 Ⓕ
VR5009	A-1 Ⓒ
VR5009	B-11 Ⓕ
VR5010	A-3 Ⓒ
VR5010	B-11 Ⓕ
VR5011	B-3 Ⓒ
VR5011	B-11 Ⓕ
VR5012	B-3 Ⓒ
VR5012	B-11 Ⓕ
VR5200	B-6 Ⓒ
VR5200	B-8 Ⓕ
VR5201	B-6 Ⓒ
VR5201	B-8 Ⓕ
VR5202	B-7 Ⓒ
VR5202	B-7 Ⓕ
VR5203	A-7 Ⓒ
VR5203	A-7 Ⓕ

Connectors

P5501	A-5 Ⓒ
P5501	A-9 Ⓕ
P5502	A-6 Ⓒ
P5502	A-8 Ⓕ
P5503	A-3 Ⓒ
P5503	A-11 Ⓕ
P5504	A-2 Ⓒ
P5504	A-2 Ⓒ
P5504	A-12 Ⓕ
P5505	A-8 Ⓕ
P5506	A-3 Ⓒ
P5506	A-11 Ⓕ
P5507	A-1 Ⓒ
P5507	A-13 Ⓕ
P5508	A-6 Ⓒ
P5508	A-8 Ⓕ
P5509	A-7 Ⓒ
P5509	A-7 Ⓕ
P5510	A-7 Ⓒ
P5510	A-7 Ⓕ
P5511	A-2 Ⓒ
P5511	A-12 Ⓕ

ADDRESS INFORMATION
Ⓒ... COMPONENT SIDE
Ⓕ... FOIL SIDE

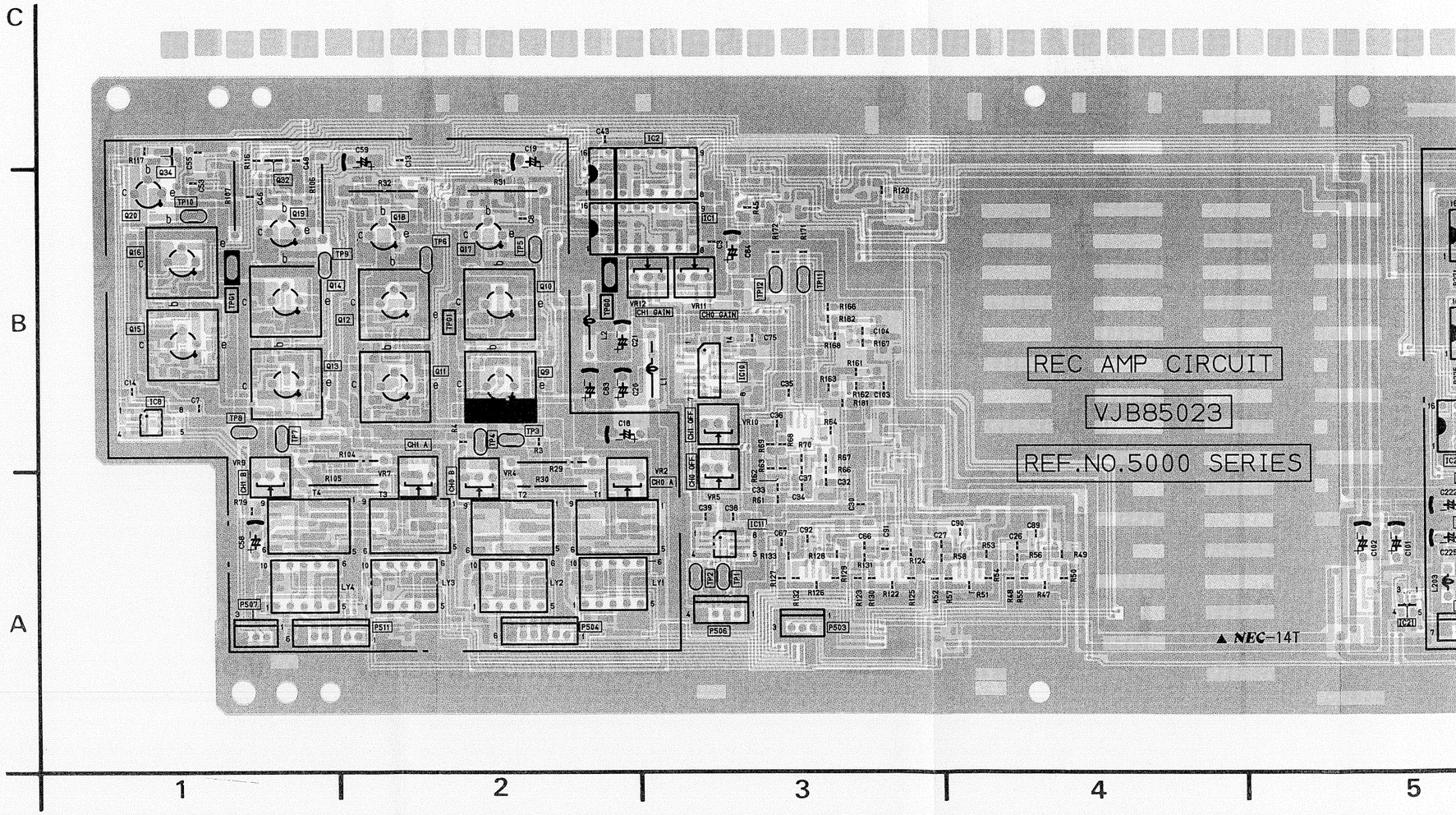

REC AMP SUB P.C. BOARD (VEP85046A)

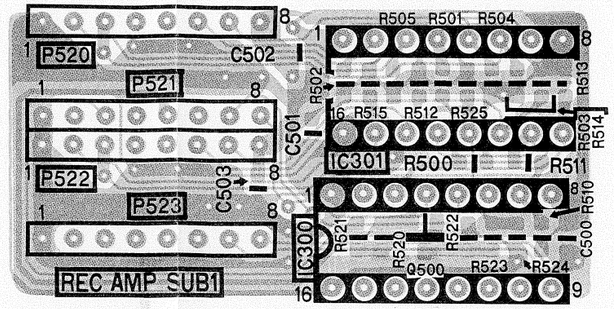

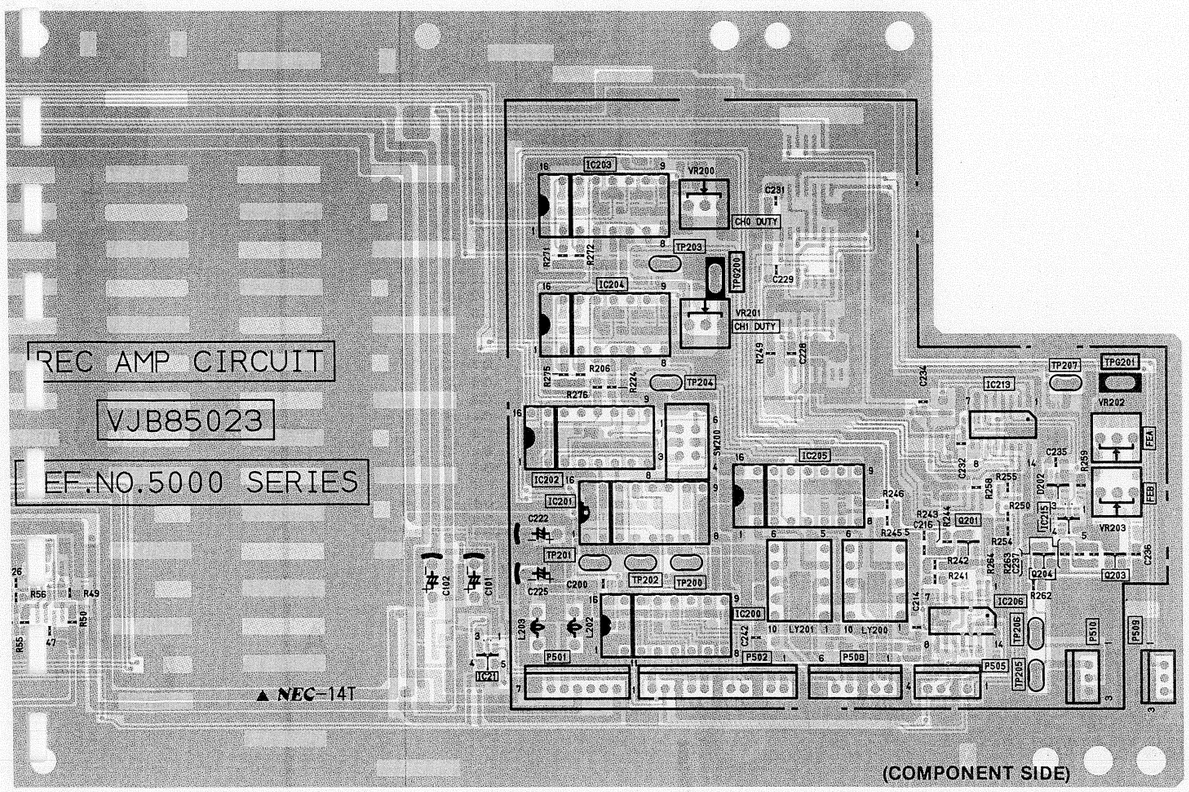

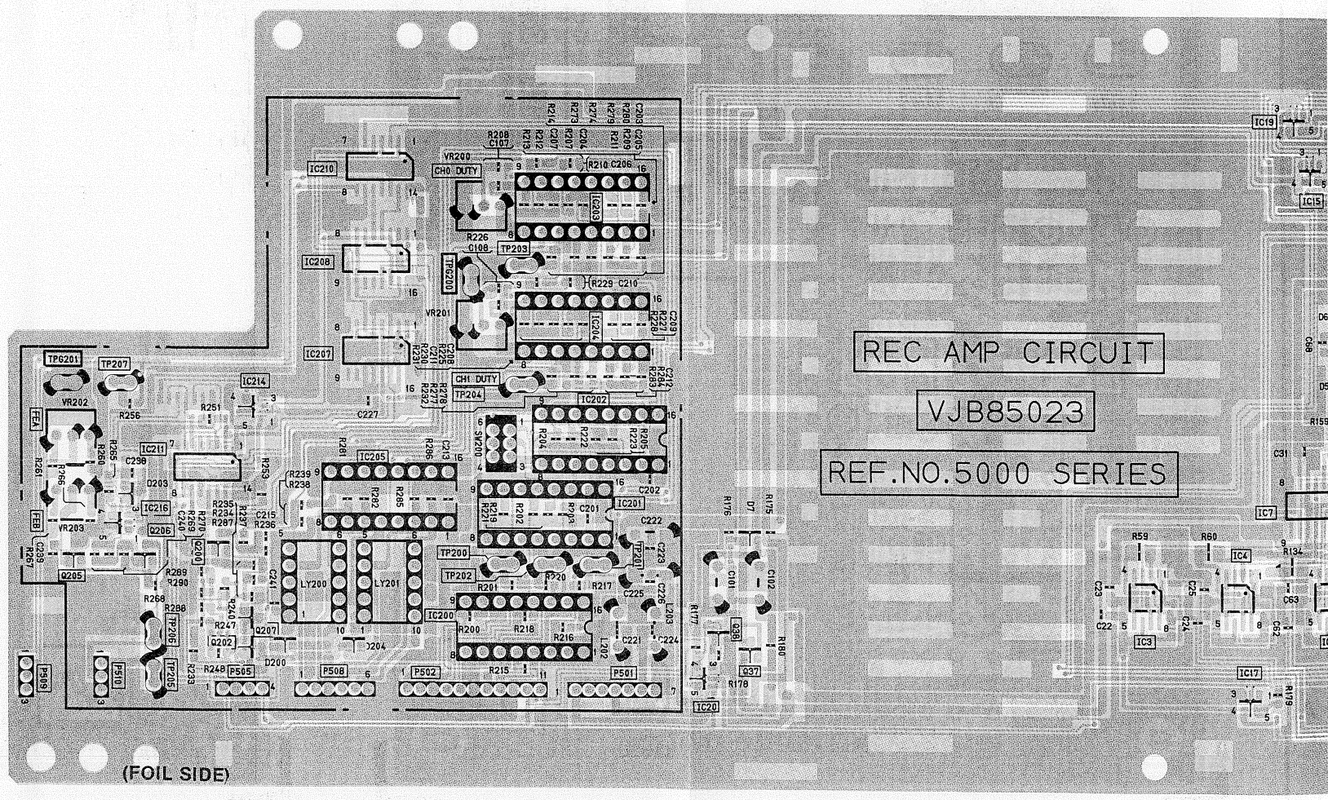

4 5 6 7 8 9 10

REC AMP SUB P.C. BOARD (VEP85046A)

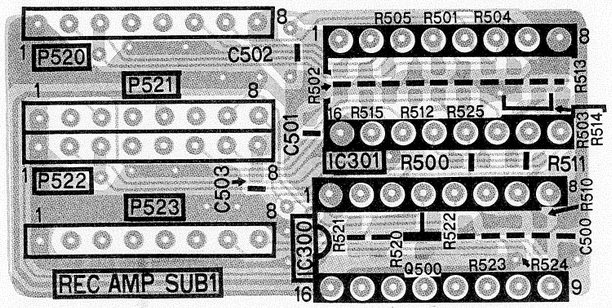

REC AMP SUB 2 P.C. BOARD (VEP85047A)

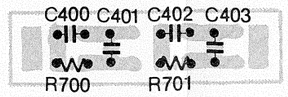

·VJB85023

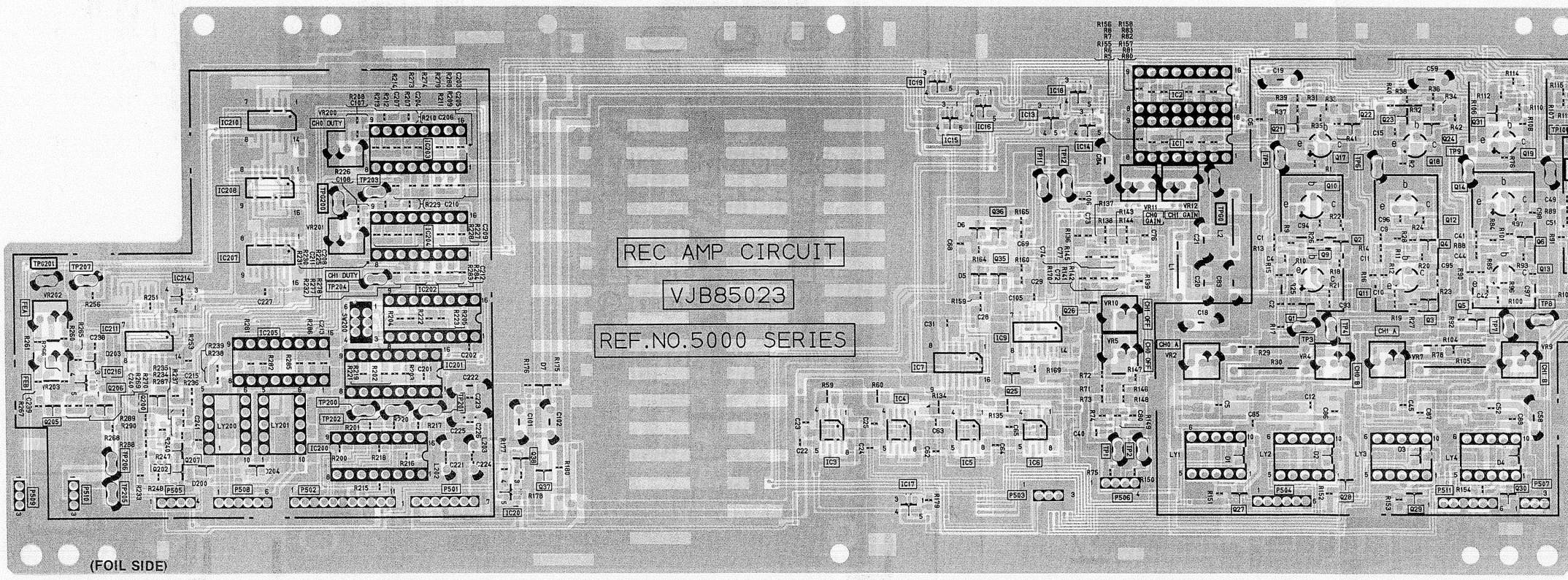

7 8 9 10 11 12 13

POWER SUPPLY SUB 3 P.C. BOARD (VEP81055B) [FOR PAL]
(VEP81055A) [FOR NTSC]

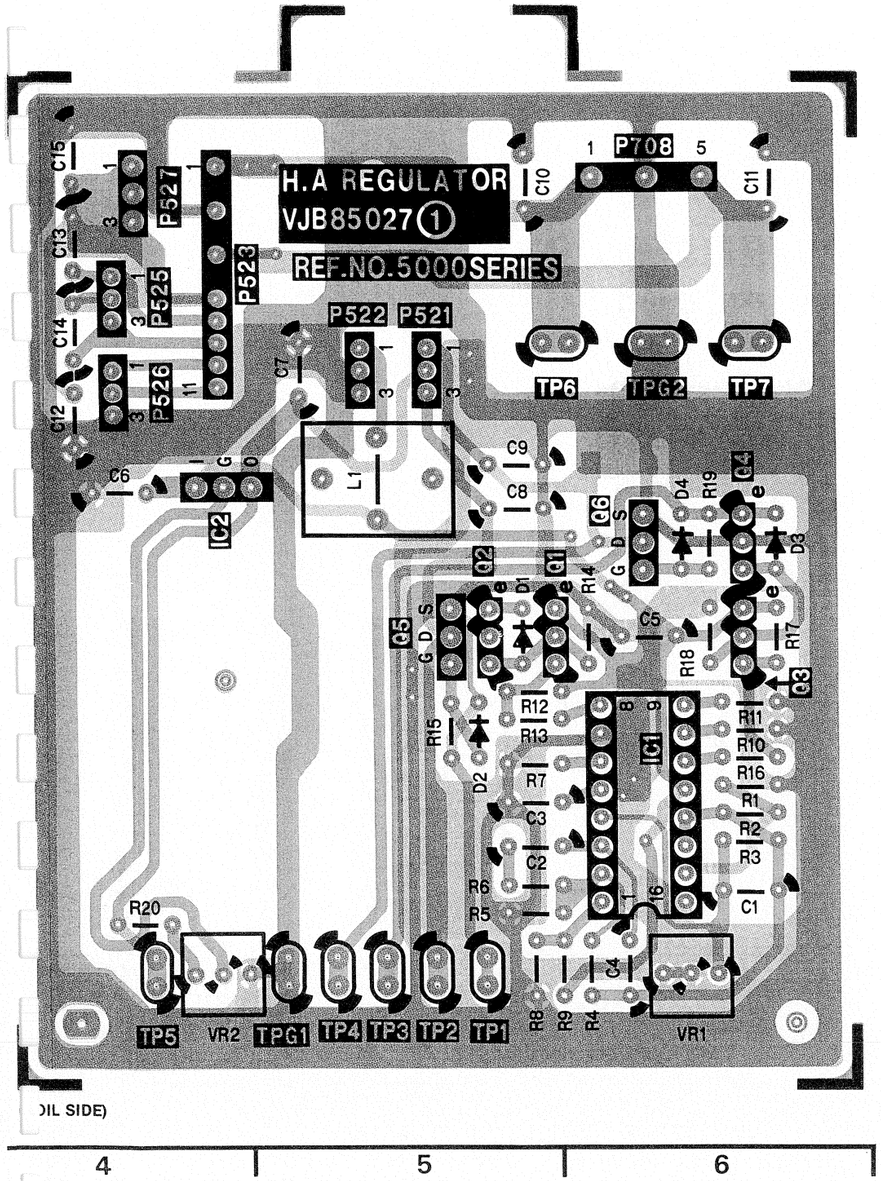

HA REGULATOR	
Transistors	
Q5001	B-2 Ⓒ
Q5001	B-6 Ⓕ
Q5002	B-2 Ⓒ
Q5002	B-5 Ⓕ
Q5003	B-1 Ⓒ
Q5003	B-6 Ⓕ
Q5004	B-1 Ⓒ
Q5004	B-6 Ⓕ
Q5005	B-2 Ⓒ
Q5005	B-5 Ⓕ
Q5006	B-2 Ⓒ
Q5006	B-6 Ⓕ
Integrated Circuits	
IC5001	A-2 Ⓒ
IC5001	B-6 Ⓕ
IC5002	B-3 Ⓒ
IC5002	B-4 Ⓕ
Test Points	
TP5001	A-2 Ⓒ
TP5001	A-5 Ⓕ
TP5002	A-2 Ⓒ
TP5002	A-5 Ⓕ
TP5003	A-2 Ⓒ
TP5003	A-5 Ⓕ
TP5004	A-2 Ⓒ
TP5004	A-5 Ⓕ
TP5005	A-3 Ⓒ
TP5005	A-4 Ⓕ
TP5006	C-2 Ⓒ
TP5006	C-6 Ⓕ
TP5007	C-1 Ⓒ
TP5007	C-6 Ⓕ
TPG5001	A-3 Ⓒ
TPG5001	A-5 Ⓕ
TPG5002	C-2 Ⓒ
TPG5002	C-6 Ⓕ
Adjustments	
VR5001	A-1 Ⓒ
VR5001	A-6 Ⓕ
VR5002	A-3 Ⓒ
VR5002	A-4 Ⓕ
Connectors	
P5521	C-2 Ⓒ
P5521	C-5 Ⓕ
P5522	C-2 Ⓒ
P5522	C-5 Ⓕ
P5523	C-3 Ⓒ
P5523	C-5 Ⓕ
P5525	C-3 Ⓒ
P5525	C-4 Ⓕ
P5526	C-3 Ⓒ
P5526	C-4 Ⓕ
P5527	D-3 Ⓒ
P5527	C-4 Ⓕ
P5708	D-1 Ⓒ
P5708	D-6 Ⓕ

ADDRESS INFORMATION
Ⓒ... COMPONENT SIDE
Ⓕ... FOIL SIDE

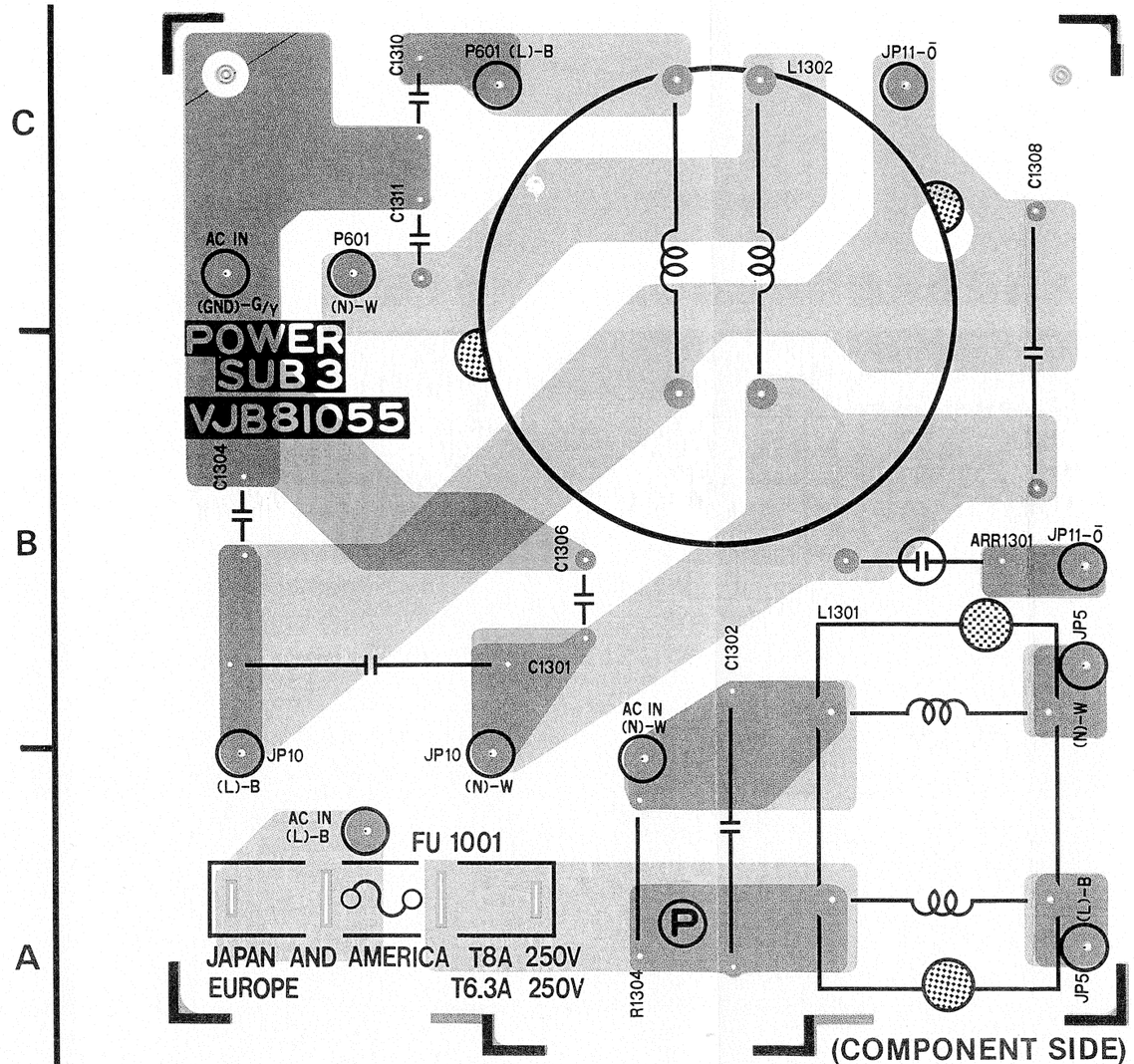

POWER SUPPLY SUB 3 P.C. BOARD (VEP81055B) [FOR PAL]
(VEP81055A) [FOR NTSC]

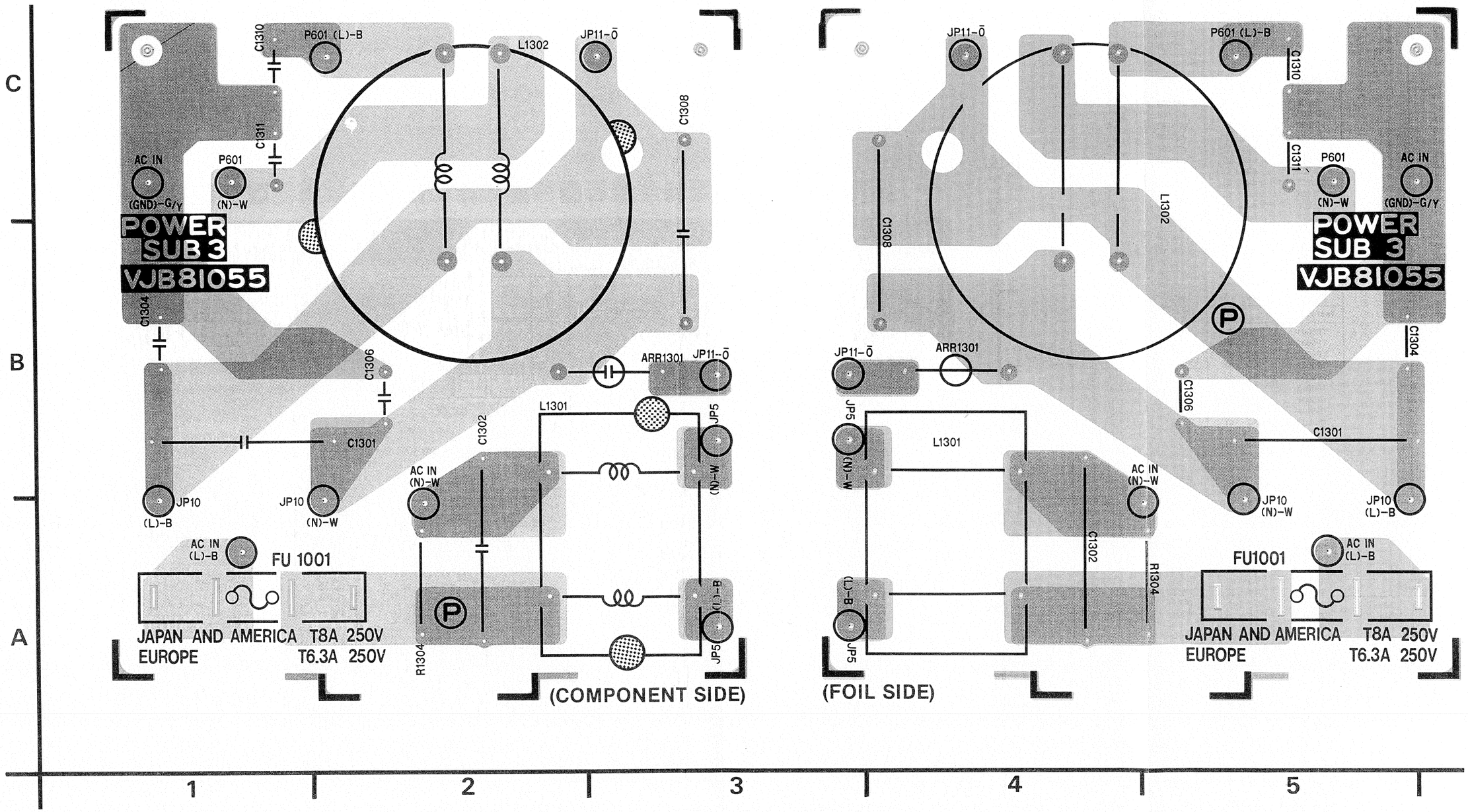

POWER SUPPLY 1 P.C. BOARD (VEP81045A)

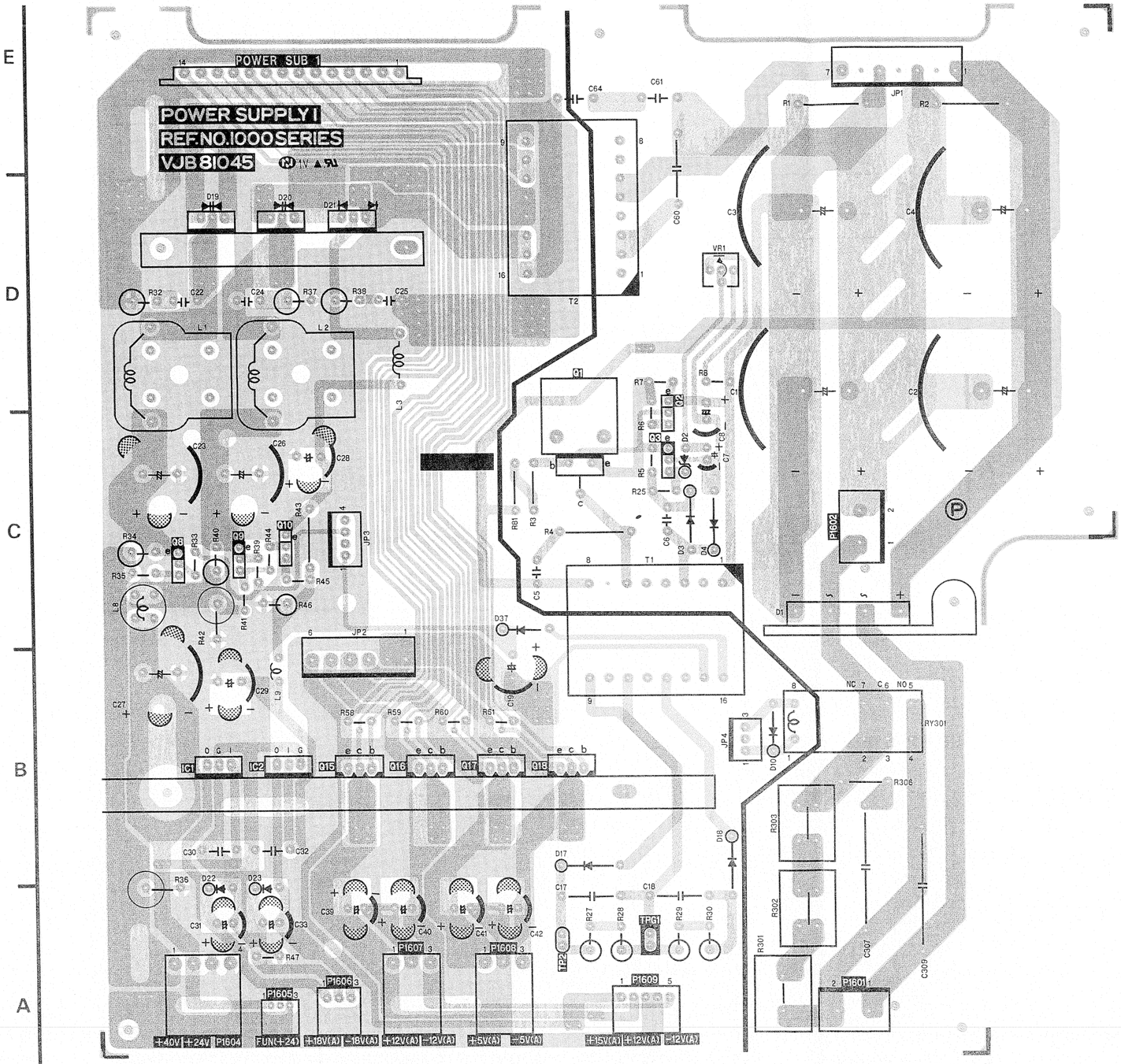

(COMPONENT SIDE)

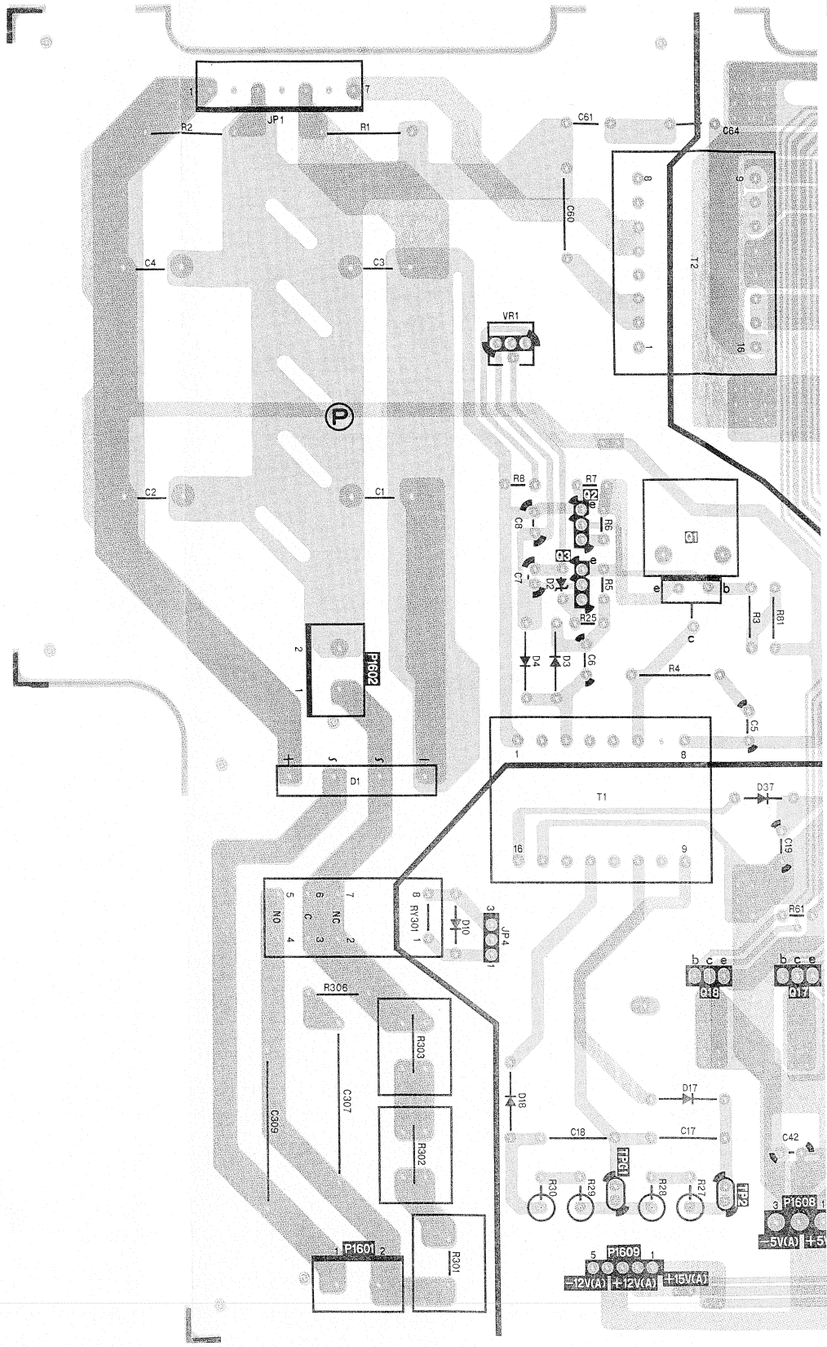

(FOIL SIDE)

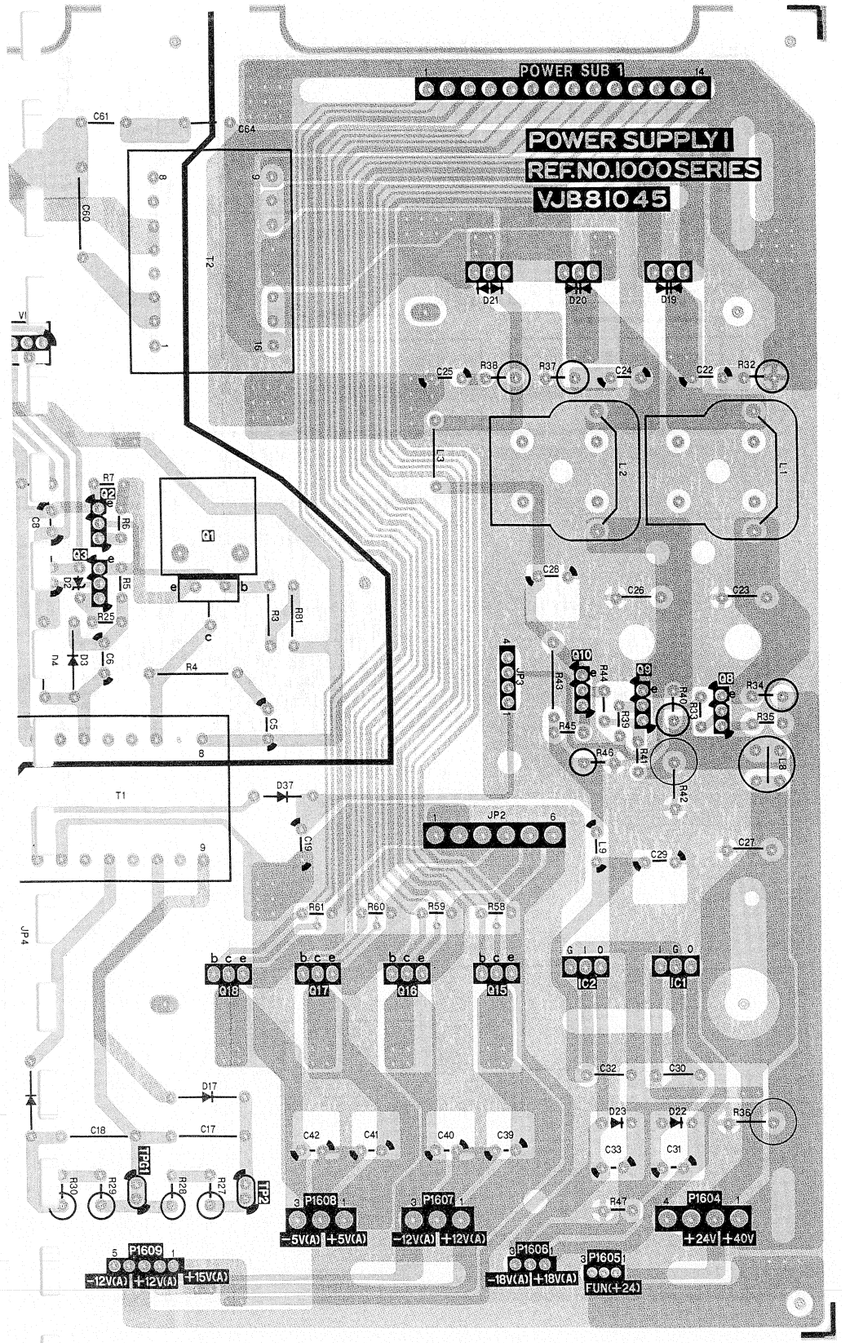

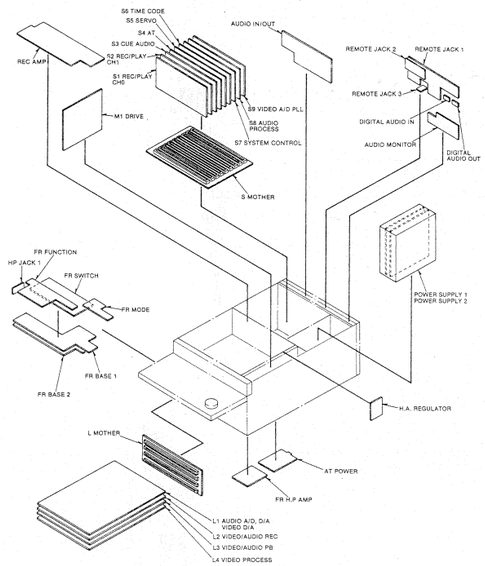

POWER SUPPLY 1	
Transistors	
Q1001	C-3 Ⓒ
Q1001	C-8 Ⓕ
Q1002	C-3 Ⓒ
Q1002	C-7 Ⓕ
Q1003	C-3 Ⓒ
Q1003	C-9 Ⓕ
Q1008	C-1 Ⓒ
Q1008	C-9 Ⓕ
Q1009	C-1 Ⓒ
Q1009	C-9 Ⓕ
Q1010	C-2 Ⓒ
Q1010	C-2 Ⓕ
Q1015	B-2 Ⓒ
Q1015	B-9 Ⓕ
Q1016	B-2 Ⓒ
Q1016	B-8 Ⓕ
Q1017	B-2 Ⓒ
Q1017	B-8 Ⓕ
Q1018	B-3 Ⓒ
Q1018	B-8 Ⓕ
Integrated Circuits	
IC1001	B-1 Ⓒ
IC1001	B-9 Ⓕ
IC1002	B-2 Ⓒ
IC1002	B-9 Ⓕ
Test Points	
TP1002	A-3 Ⓒ
TP1002	A-8 Ⓕ
TPG1001	A-3 Ⓒ
TPG1001	A-7 Ⓕ
Adjustments	
VR1001	D-4 Ⓒ
VR1001	D-7 Ⓕ
Connectors	
P1601	A-4 Ⓒ
P1601	A-7 Ⓕ
P1602	C-4 Ⓒ
P1602	C-6 Ⓕ
P1604	A-1 Ⓒ
P1604	A-9 Ⓕ
P1605	A-1 Ⓒ
P1605	A-9 Ⓕ
P1606	A-2 Ⓒ
P1606	A-9 Ⓕ
P1607	A-2 Ⓒ
P1607	A-8 Ⓕ
P1608	A-2 Ⓒ
P1608	A-8 Ⓕ
P1609	A-3 Ⓒ
P1609	A-7 Ⓕ

ADDRESS INFORMATION
Ⓒ... COMPONENT SIDE
Ⓕ... FOIL SIDE

POWER SUPPLY SUB 1 P.C. BOARD (VEP81048A)

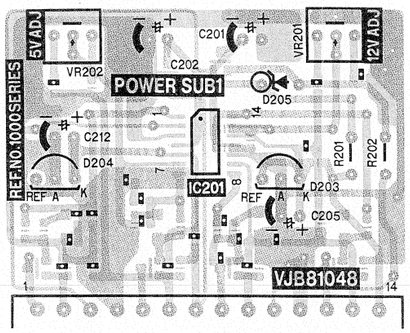

(COMPONENT SIDE)

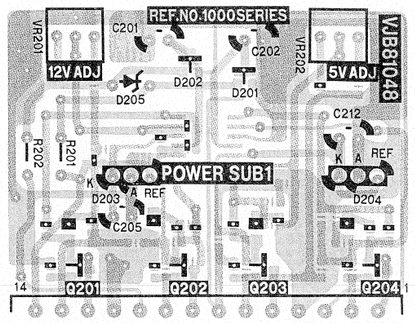

(FOIL SIDE)

8 9 10 11 12 13

POWER SUPPLY 2 P.C. BOARD (VEP81047A)

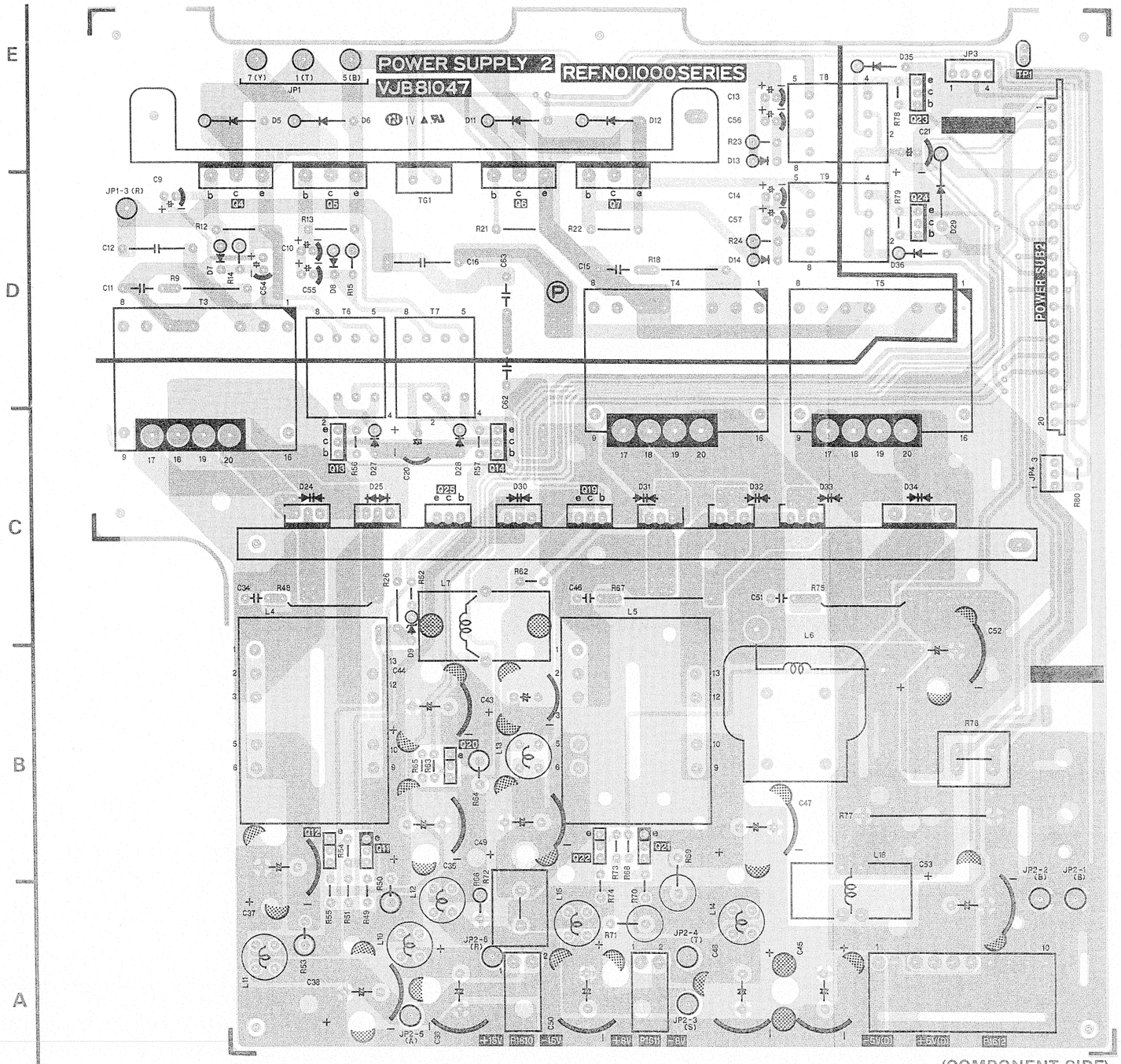

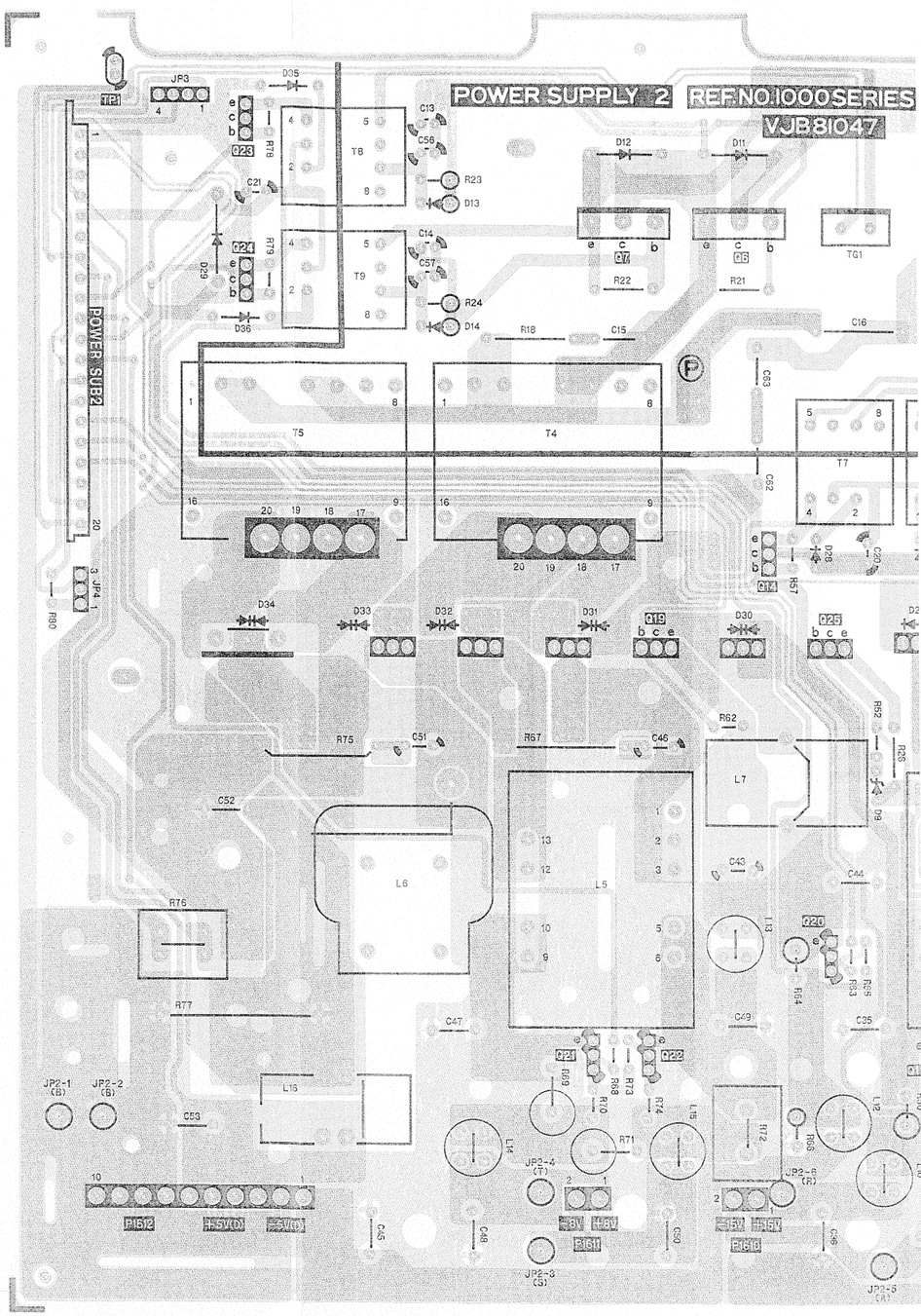

AT POWER P.C. BOARD (VEP82062B)

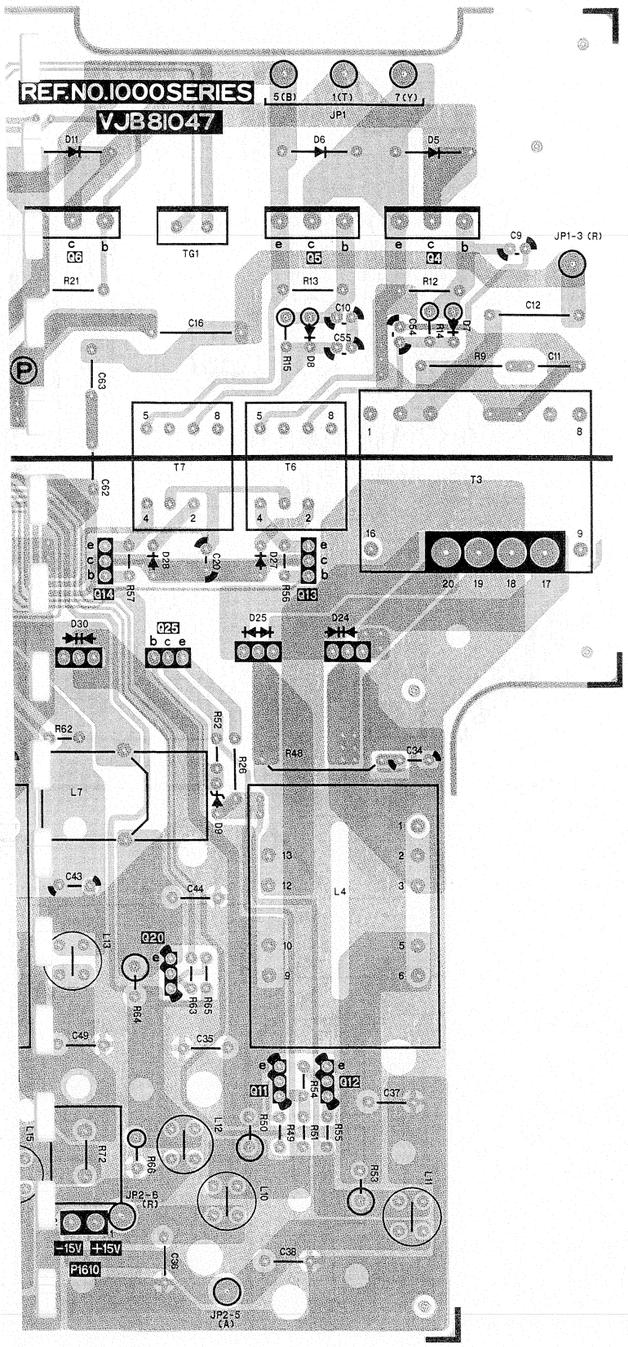

POWER SUPPLY 2	
Transistors	
Q1004	D-1 ©
Q1004	D-9 Ⓕ
Q1005	D-2 ©
Q1005	D-9 Ⓕ
Q1006	D-3 ©
Q1006	D-8 Ⓕ
Q1007	D-3 ©
Q1007	D-8 Ⓕ
Q1011	B-2 ©
Q1011	B-9 Ⓕ
Q1012	B-2 ©
Q1012	B-9 Ⓕ
Q1013	C-2 ©
Q1013	C-9 Ⓕ
Q1014	C-2 ©
Q1014	C-8 Ⓕ
Q1019	C-3 ©
Q1019	C-8 Ⓕ
Q1020	B-2 ©
Q1020	B-8 Ⓕ
Q1021	B-3 ©
Q1021	B-7 Ⓕ
Q1022	B-3 ©
Q1022	B-8 Ⓕ
Q1023	E-4 ©
Q1023	E-6 Ⓕ
Q1024	D-4 ©
Q1024	D-6 Ⓕ
Q1025	C-2 ©
Q1025	C-8 Ⓕ
Integrated Circuits	
IC1101	A-11 Ⓕ
Test Points	
TP1001	E-5 ©
TP1001	E-6 Ⓕ
Connectors	
P1610	A-3 ©
P1610	A-8 Ⓕ
P1611	A-3 ©
P1611	A-7 Ⓕ
P1612	A-5 ©
P1612	A-6 Ⓕ

ADDRESS INFORMATION
© ... COMPONENT SIDE
Ⓕ ... FOIL SIDE

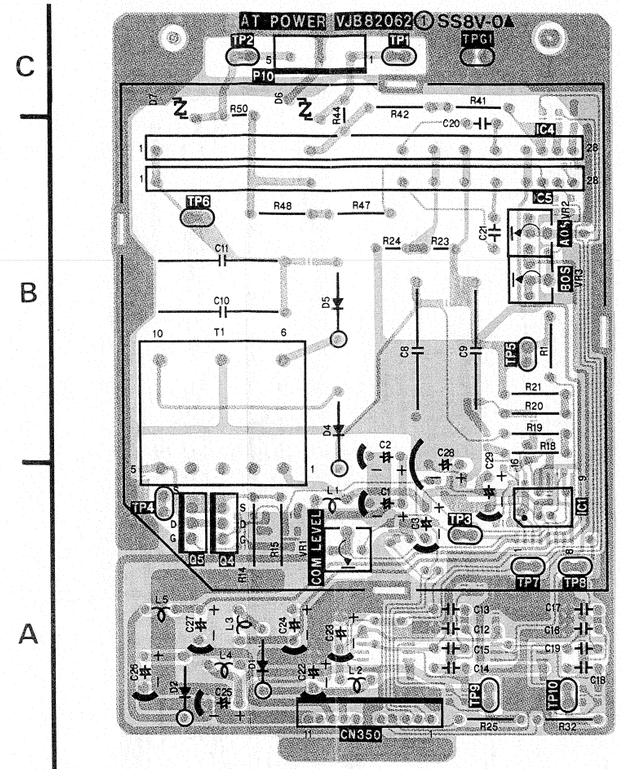

(COMPONENT SIDE)

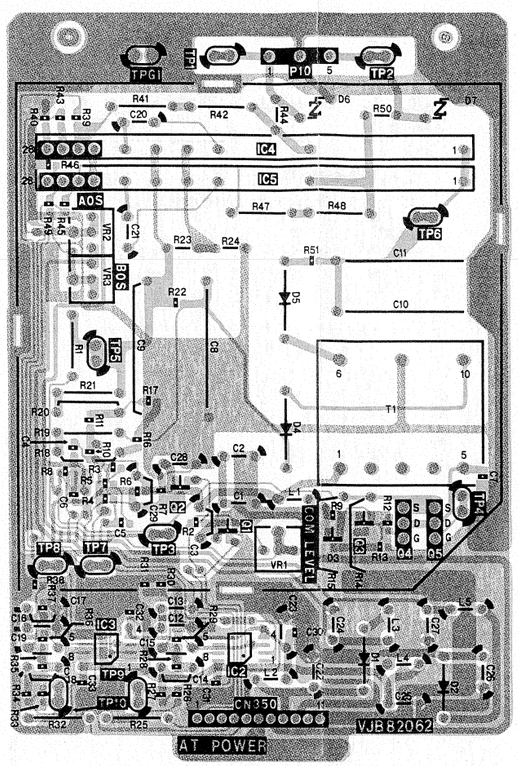

(FOIL SIDE)

AT POWER	
Transistor	
Q1	A-3 Ⓕ
Q2	A-3 Ⓕ
Q3	A-3 Ⓕ
Q4	A-1 ©
Q4	A-3 Ⓕ
Q5	A-1 ©
Q5	A-3 Ⓕ
Integrated Circuits	
IC1	A-2 ©
IC2	A-3 Ⓕ
IC3	A-3 Ⓕ
IC4	B-2 ©
IC4	B-3 Ⓕ
IC5	B-2 ©
IC5	B-3 Ⓕ
Test Points	
TP1	C-2 ©
TP1	C-3 Ⓕ
TP2	C-1 ©
TP2	C-3 Ⓕ
TP3	A-2 ©
TP3	A-3 Ⓕ
TP4	A-1 ©
TP4	A-4 Ⓕ
TP5	B-2 ©
TP5	B-3 Ⓕ
TP6	B-1 ©
TP6	B-3 Ⓕ
TP7	A-2 ©
TP7	A-3 Ⓕ
TP8	A-2 ©
TP8	A-2 Ⓕ
TP9	A-2 ©
TP9	A-3 Ⓕ
TP10	A-2 ©
TP10	A-2 Ⓕ
TPG1	C-2 ©
TPG1	C-3 Ⓕ
Adjustments	
VR1	A-1 ©
VR1	A-3 Ⓕ
VR2	B-2 ©
VR2	B-3 Ⓕ
VR3	B-2 ©
VR3	B-3 Ⓕ

ADDRESS INFORMATION
© ... COMPONENT SIDE
Ⓕ ... FOIL SIDE

POWER SUPPLY SUB 2 P.C. BOARD (VEP81046A)

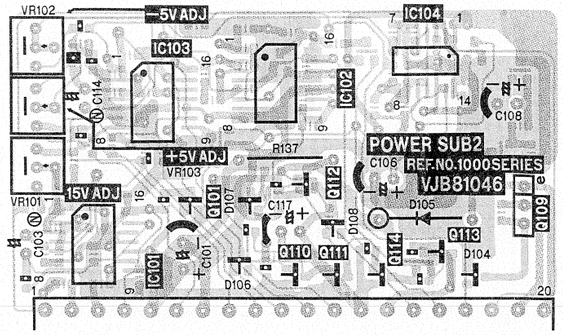

(COMPONENT SIDE)

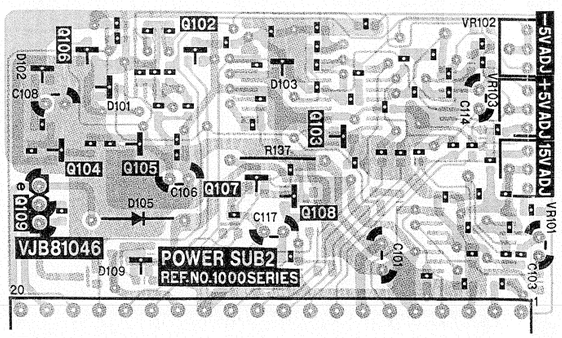

(FOIL SIDE)

FR MODE P.C. BOARD (VEP86097A)

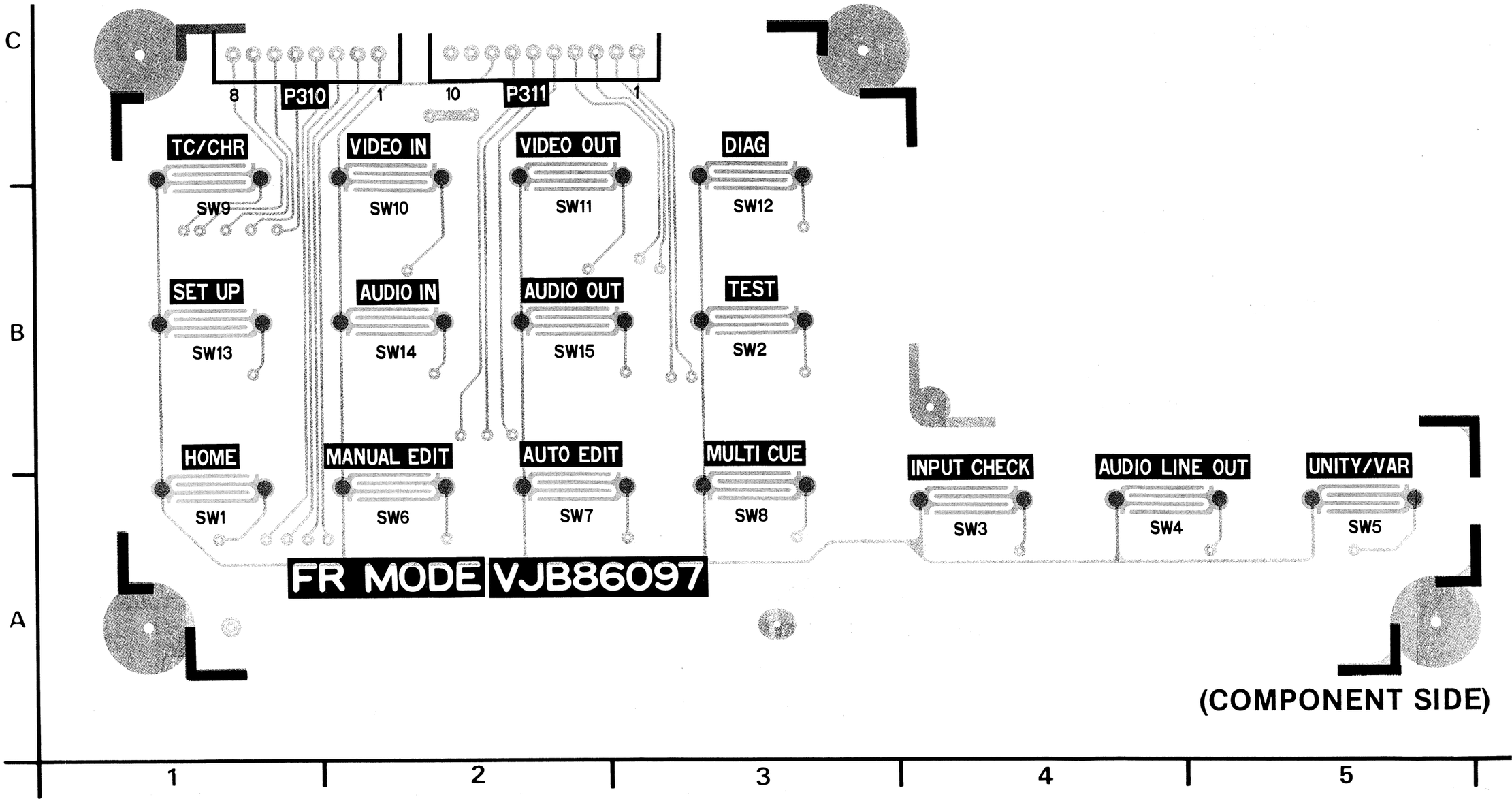

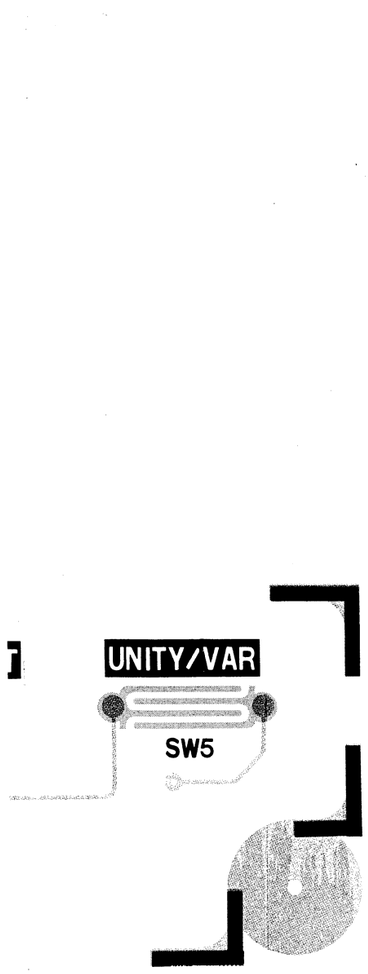

)MPONENT SIDE)

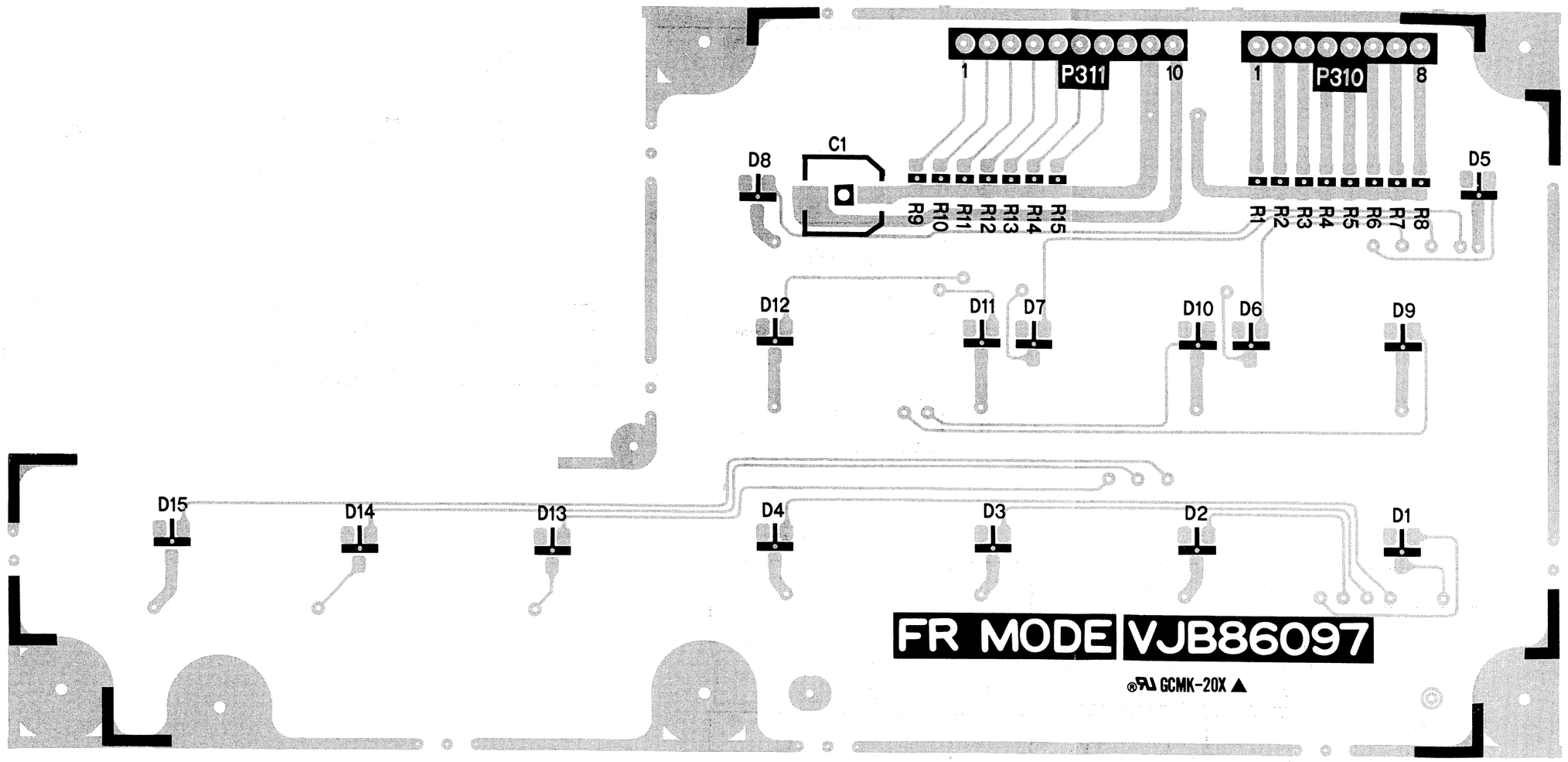

(FOIL SIDE)

5 6 7 8 9 10

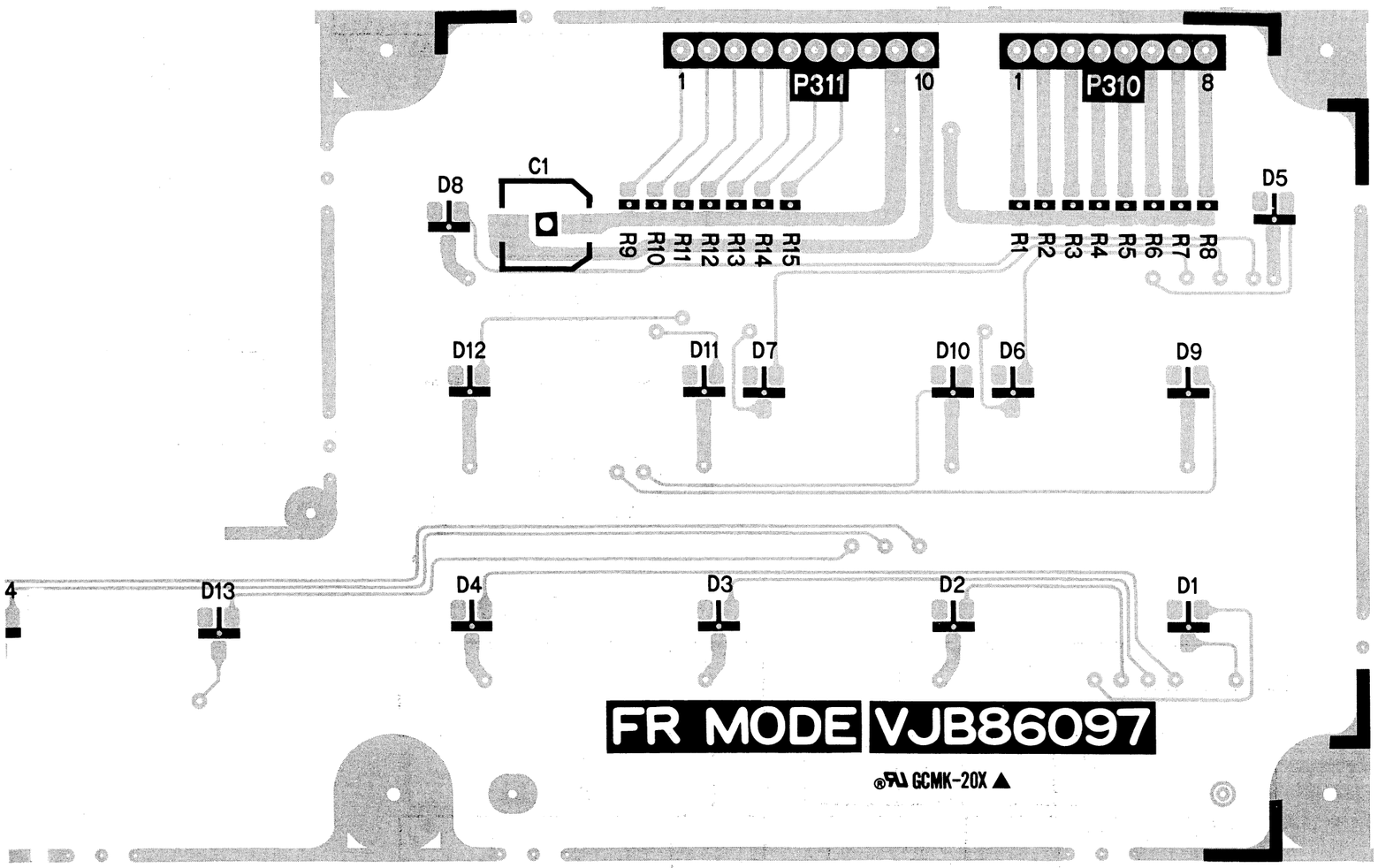
P311
1
10
P310
1
8
C1
D8
D5
R9
R10
R11
R12
R13
R14
R15
R1
R2
R3
R4
R5
R6
R7
R8
D12
D11
D7
D10
D6
D9
D13
D4
D3
D2
D1
FR MODE VJB86097
GCMK-20X ▲

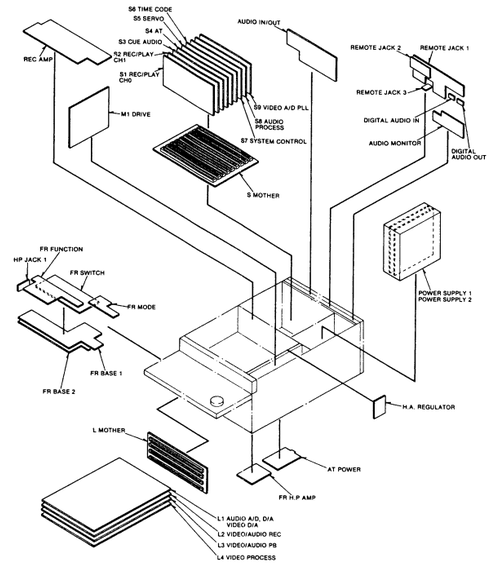
S6 TIME CODE
S5 SERVO
S4 A.T.
S3 CUE AUDIO
S2 REC/PLAY CH1
S1 REC/PLAY CH0
AUDIO IN/OUT
REC AMP
REMOTE JACK 2
REMOTE JACK 1
REMOTE JACK 3
M1 DRIVE
S9 VIDEO A/D PLL
S8 AUDIO PROCESS
S7 SYSTEM CONTROL
DIGITAL AUDIO IN
AUDIO MONITOR
DIGITAL AUDIO OUT
S MOTHER
FR FUNCTION
HP JACK 1
FR SWITCH
FR MODE
POWER SUPPLY 1
POWER SUPPLY 2
FR BASE 1
FR BASE 2
H.A. REGULATOR
L MOTHER
AT POWER
FR H.P AMP
L1 AUDIO A/D, D/A
VIDEO D/A
L2 VIDEO/AUDIO REC
L3 VIDEO/AUDIO PB
L4 VIDEO PROCESS

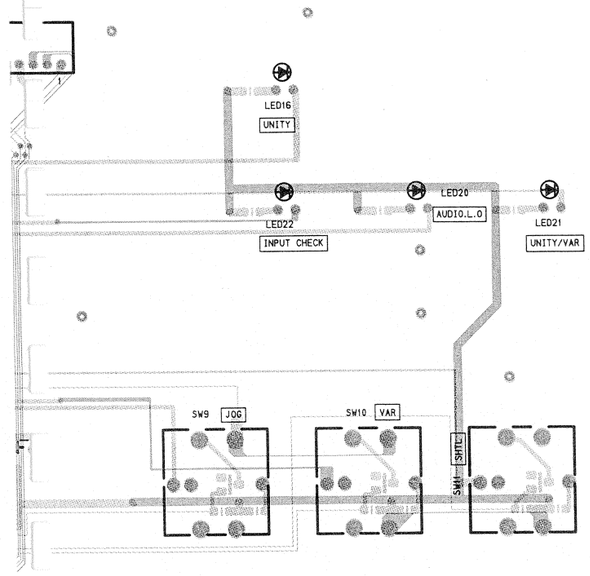

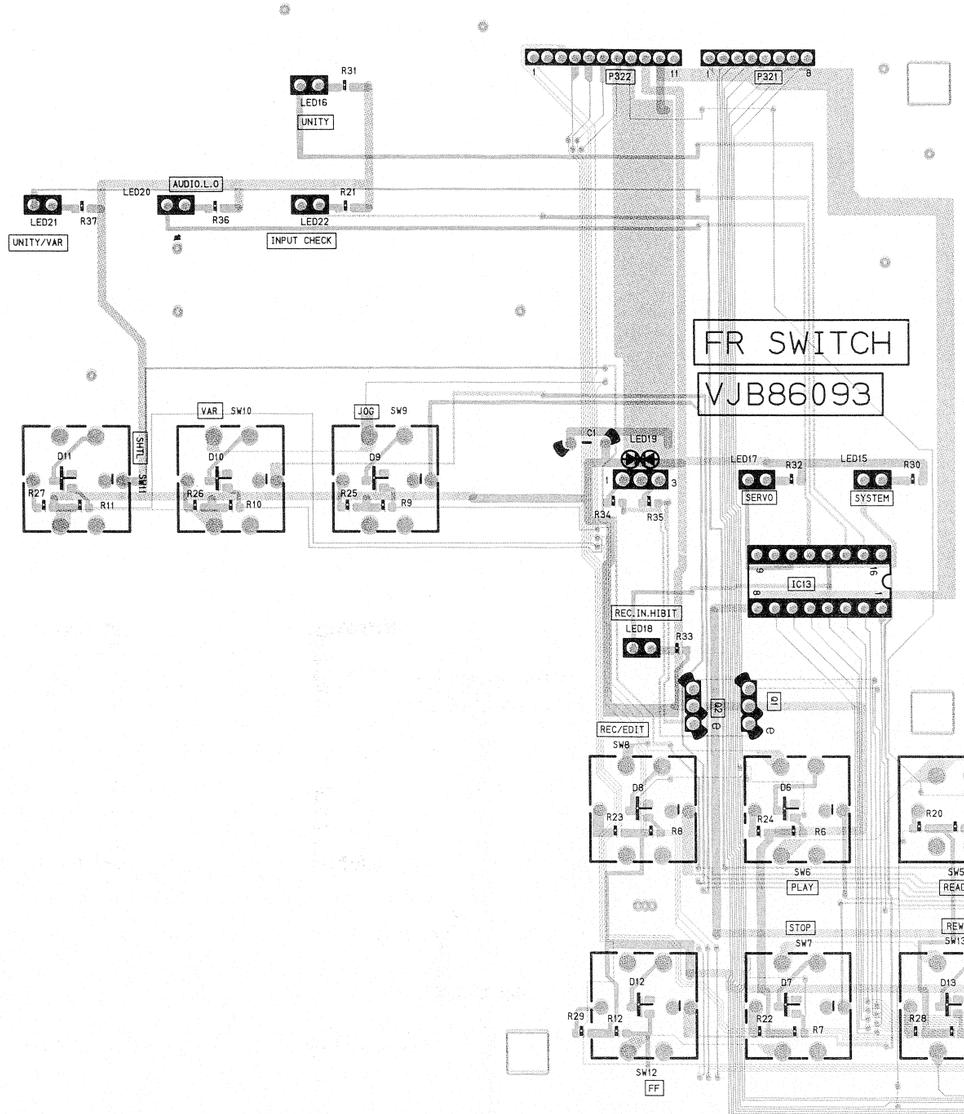

(FOIL SIDE)

6 7 8 9 10 11 12

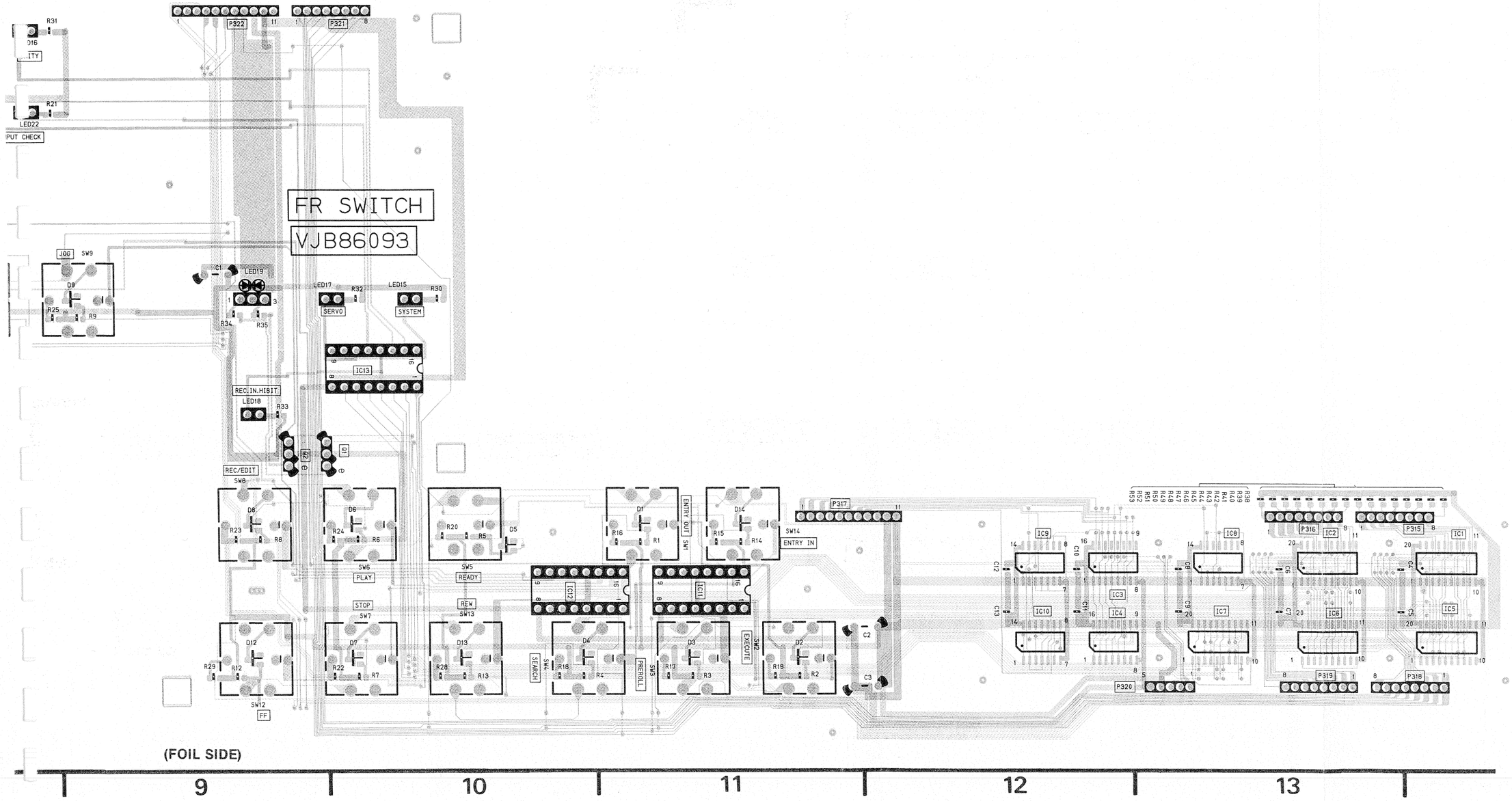

FR SW	
Transistors	
Q1	B-5 Ⓒ
Q1	B-10 Ⓕ
Q2	B-5 Ⓒ
Q2	B-9 Ⓕ
Integrated Circuits	
IC1	A-14 Ⓕ
IC2	B-13 Ⓕ
IC3	A-13 Ⓕ
IC4	A-13 Ⓕ
IC5	A-14 Ⓕ
IC7	A-13 Ⓕ
IC8	B-13 Ⓕ
IC9	B-12 Ⓕ
IC10	A-12 Ⓕ
IC11	A-4 Ⓒ
IC11	A-11 Ⓕ
IC12	A-4 Ⓒ
IC12	A-11 Ⓕ
IC13	B-5 Ⓒ
IC13	B-10 Ⓕ
Connectors	
P315	B-1 Ⓒ
P315	B-14 Ⓕ
P316	B-2 Ⓒ
P316	B-13 Ⓕ
P317	B-3 Ⓒ
P317	B-12 Ⓕ
P318	A-1 Ⓒ
P318	A-14 Ⓕ
P319	A-2 Ⓒ
P319	A-13 Ⓕ
P320	A-2 Ⓒ
P320	A-13 Ⓕ
P321	C-5 Ⓒ
P321	C-10 Ⓕ
P322	C-6 Ⓒ
P322	C-9 Ⓕ

ADDRESS INFORMATION
Ⓒ... COMPONENT SIDE
Ⓕ... FOIL SIDE

FR FUNCTION P.C. BOARD (VEP86094A)

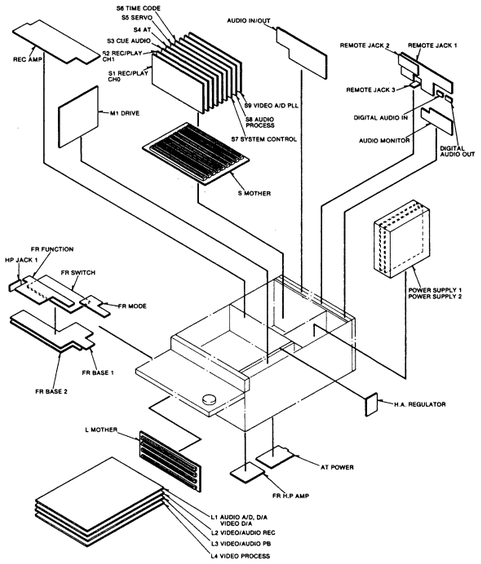

FR FUNCTION	
Connectors	
P312	A-2 Ⓒ
P312	A-15 Ⓕ
P313	A-3 Ⓒ
P313	A-14 Ⓕ
P314	A-4 Ⓒ
P314	A-13 Ⓕ

ADDRESS INFORMATION
Ⓒ... COMPONENT SIDE
Ⓕ... FOIL SIDE

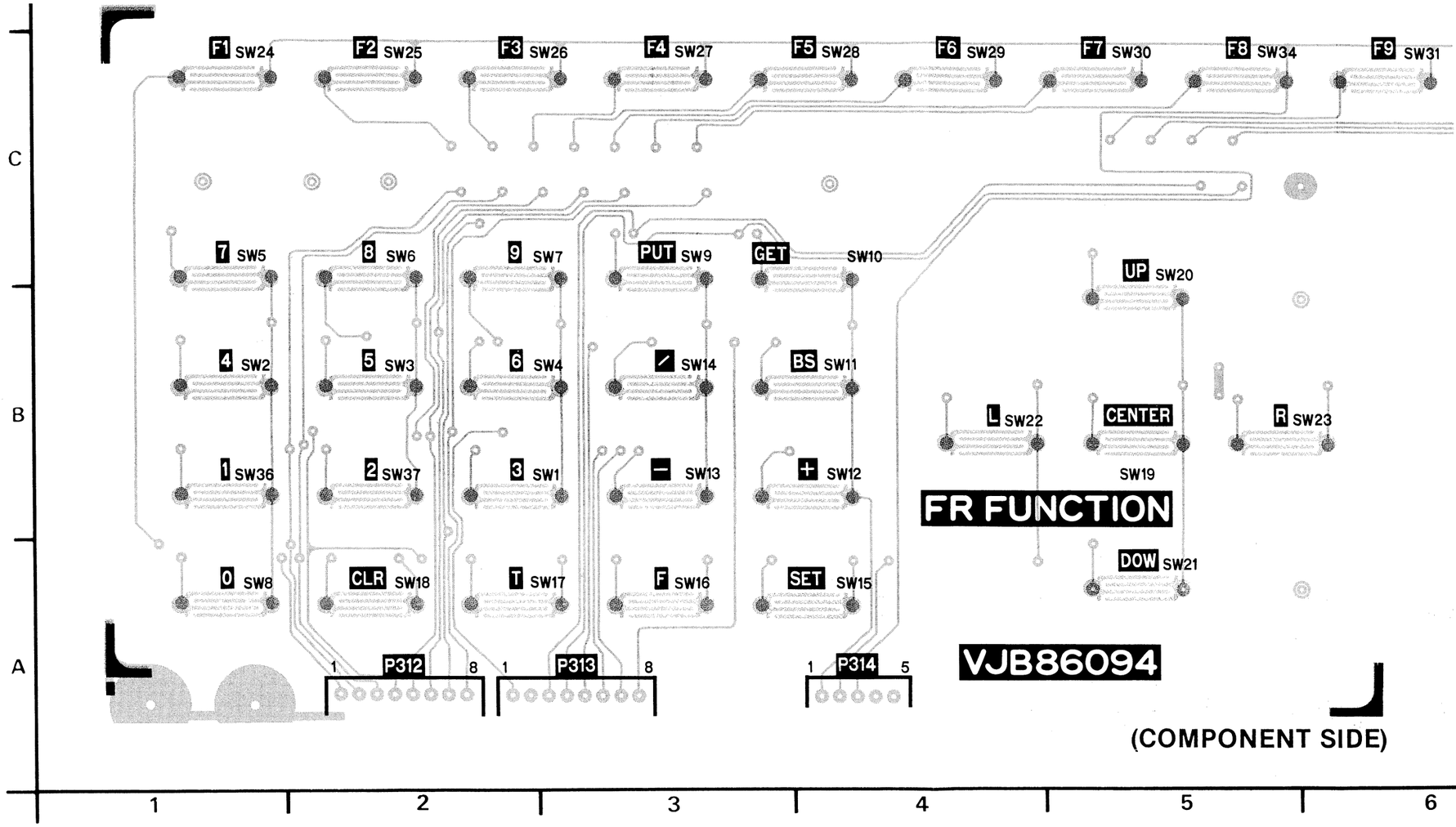

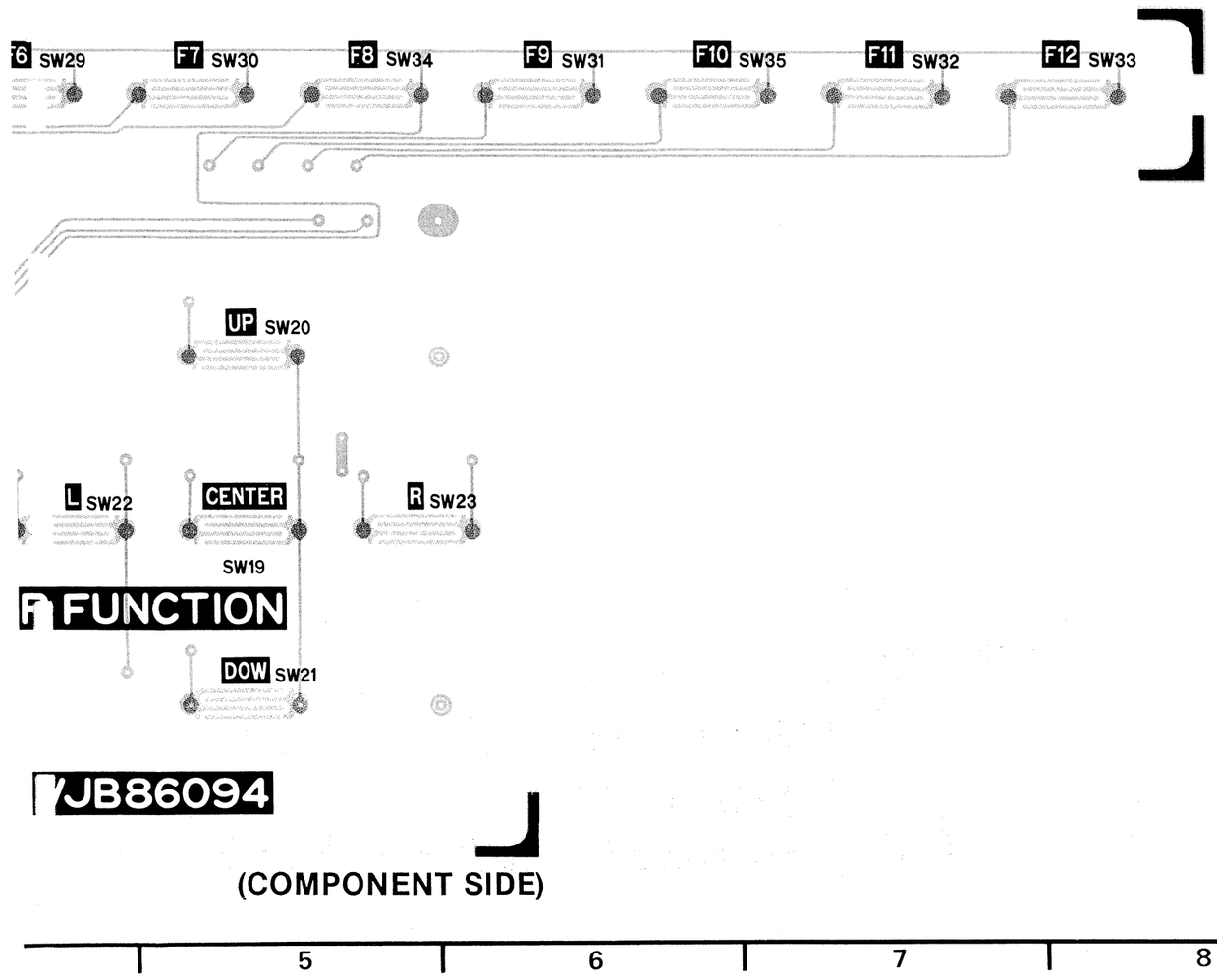

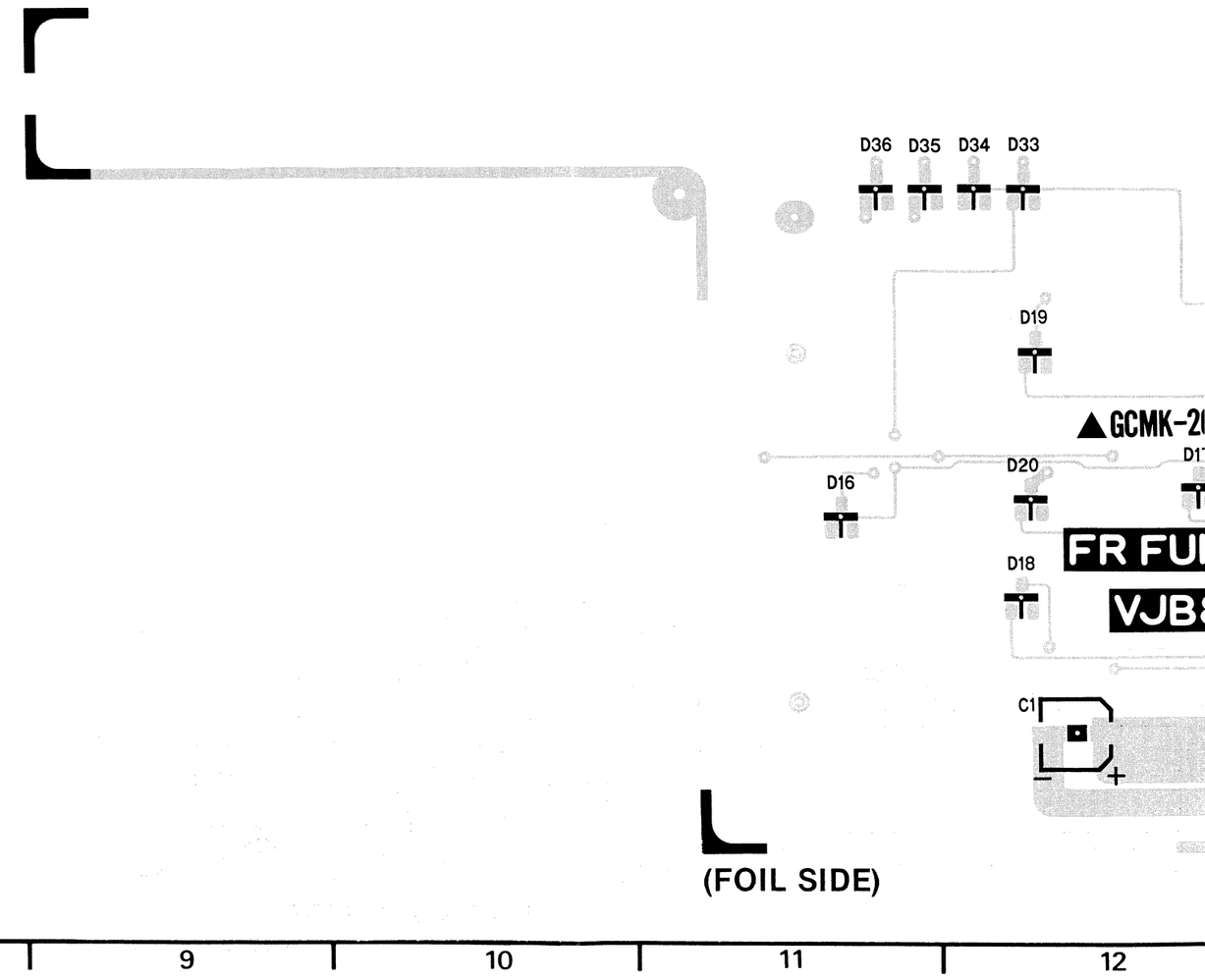

JB86094

(COMPONENT SIDE)

(FOIL SIDE)

5 6 7 8 9 10 11 12

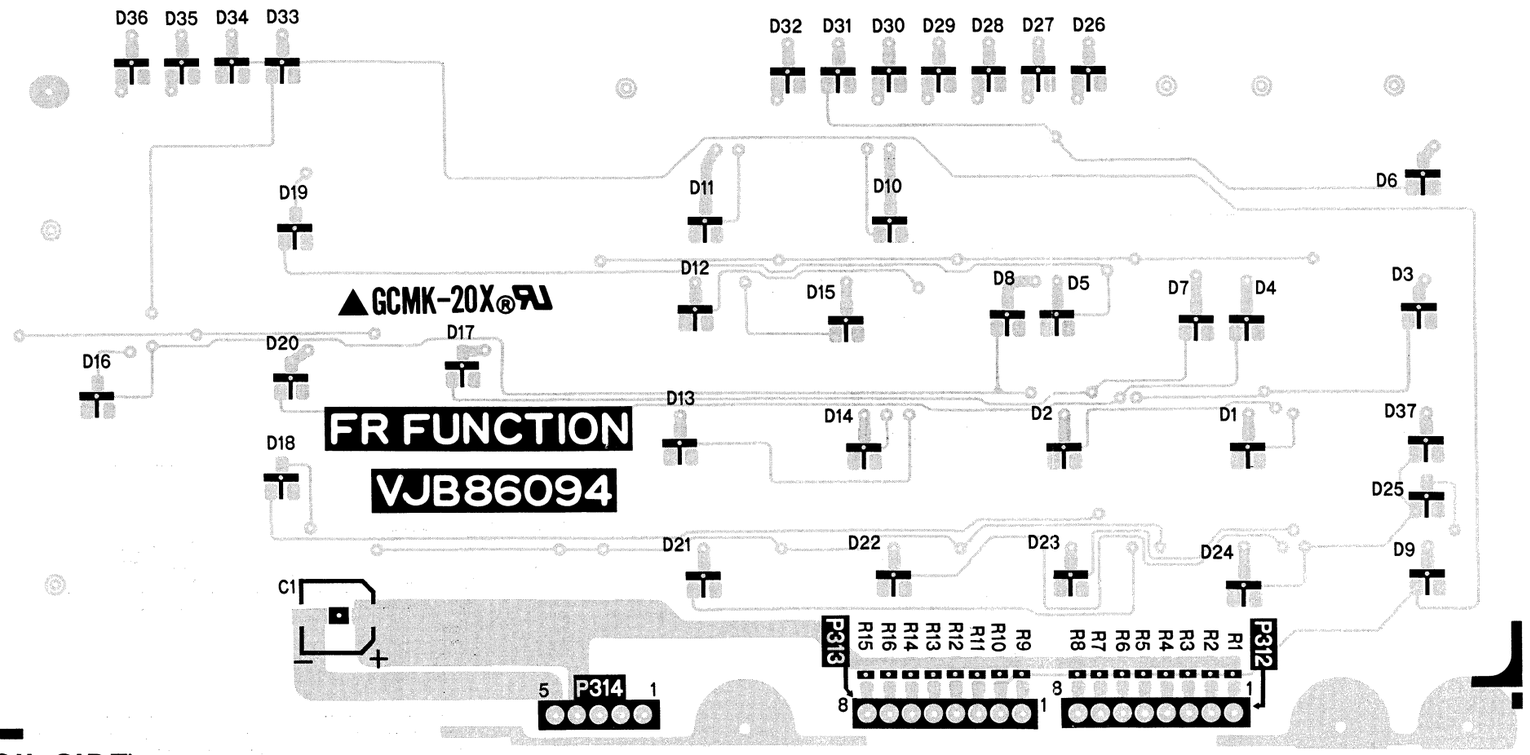

(FOIL SIDE)

9 10 11 12 13 14 15

FR BASE 1 P.C. BOARD (VEP86095A)

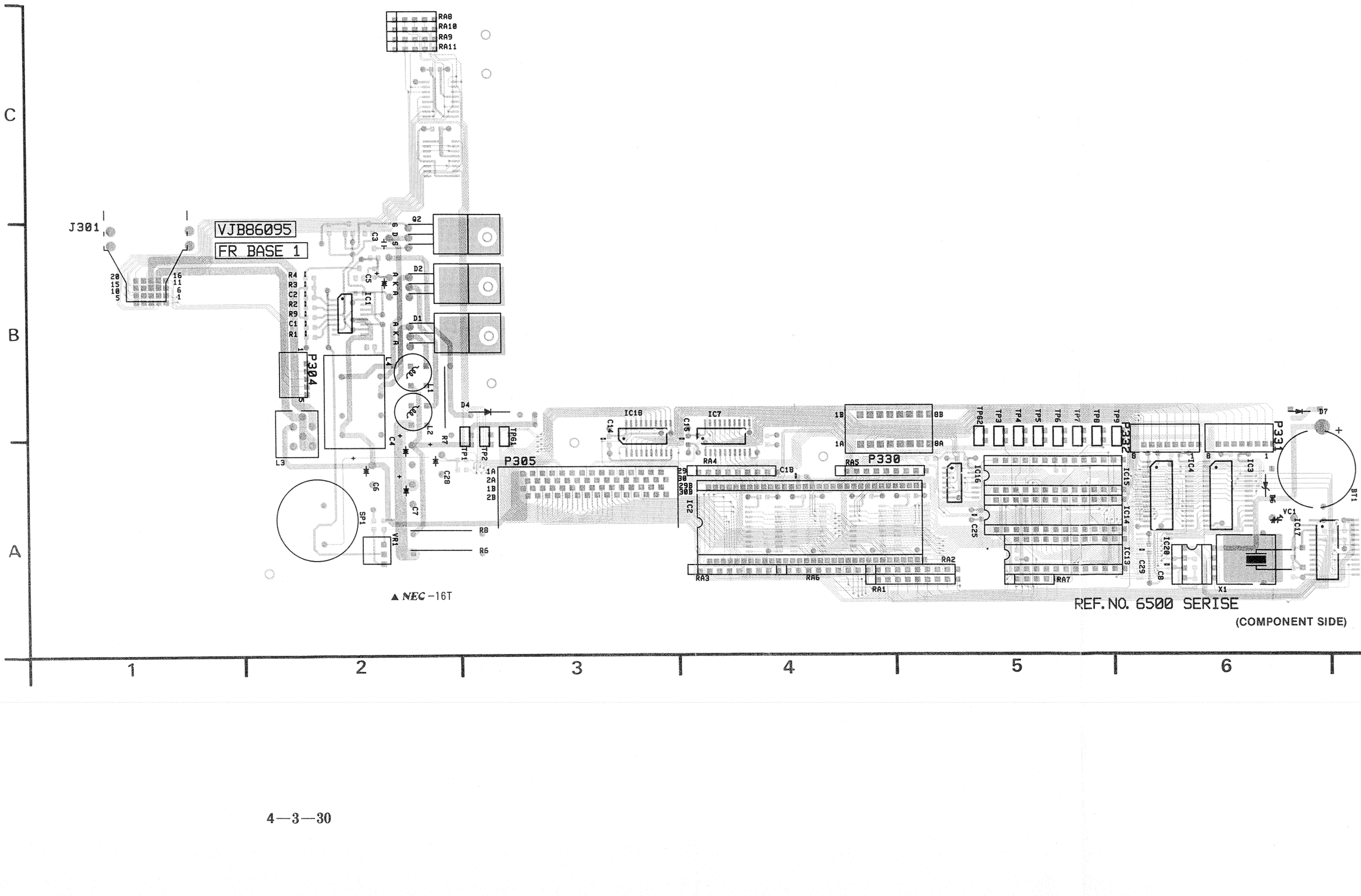

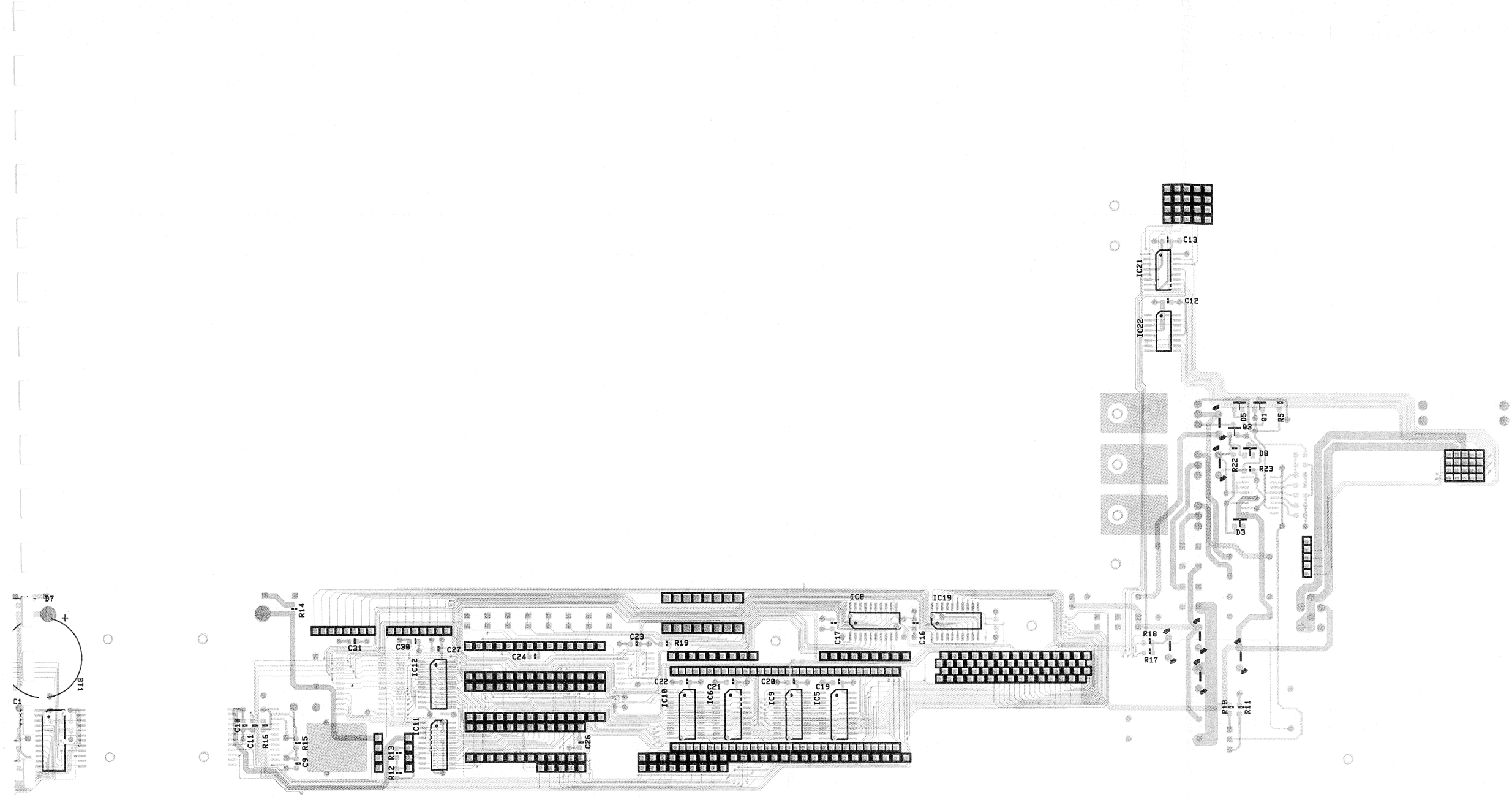

E'T SIDE)

(FOIL SIDE)

7 8 9 10 11 12 13

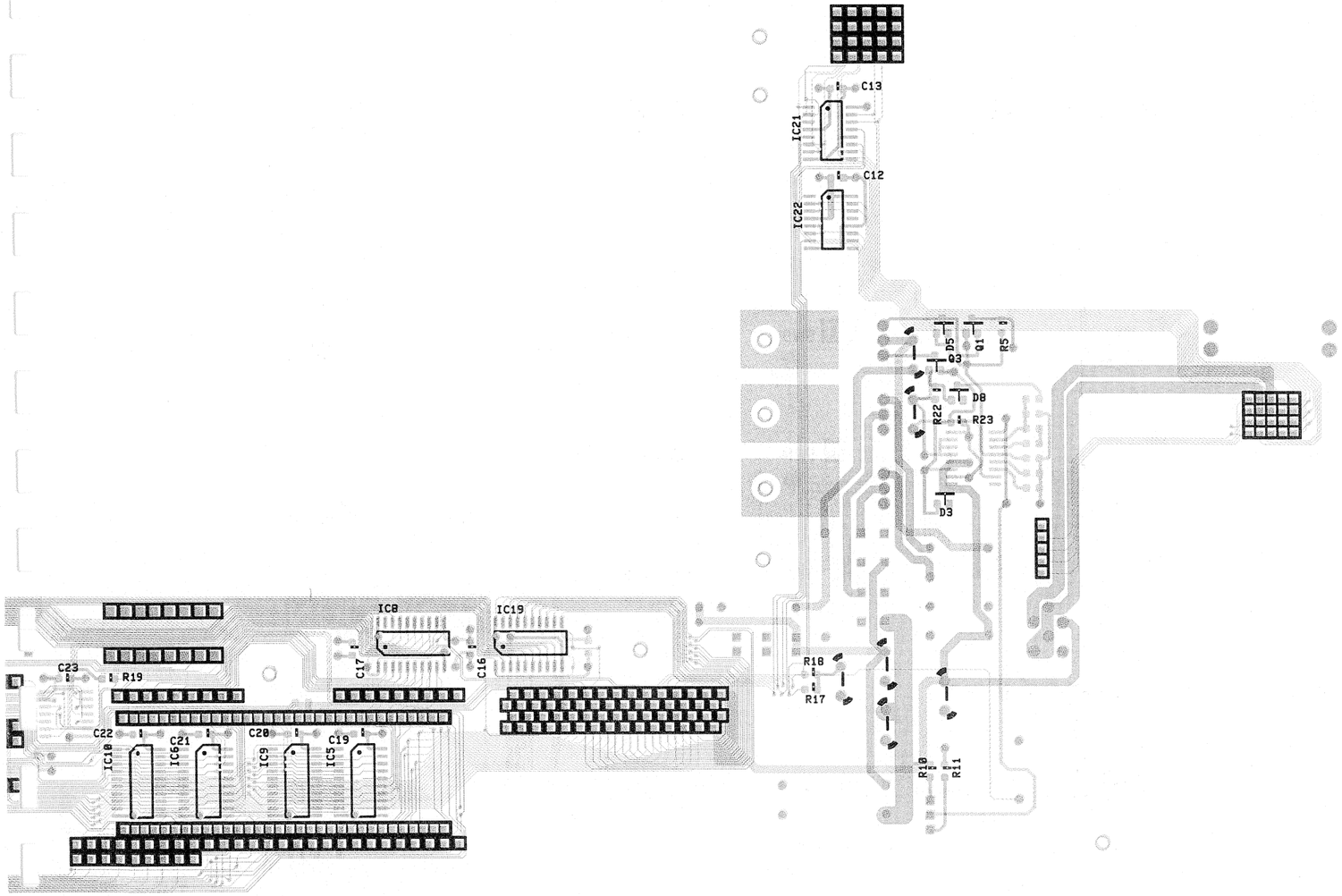

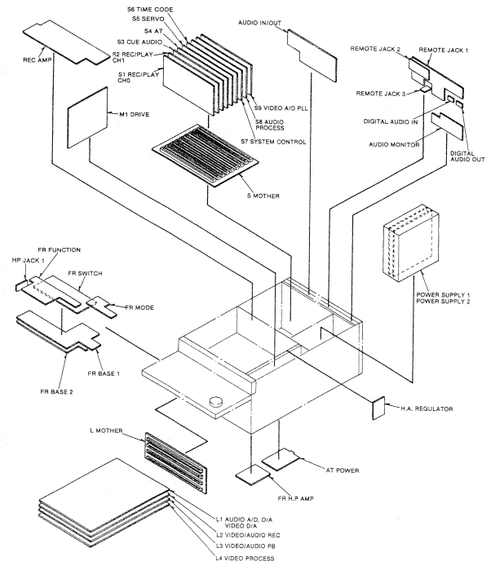

FR BASE 1	
Transistors	
Q6501	B-12 Ⓕ
Q6502	B-2 Ⓒ
Q6502	B-2 Ⓕ
Q6503	B-12 Ⓕ
Integrated Circuits	
IC6501	B-2 Ⓒ
IC6502	A-4 Ⓒ
IC6503	A-6 Ⓒ
IC6504	A-6 Ⓒ
IC6505	A-10 Ⓕ
IC6506	A-9 Ⓕ
IC6507	A-4 Ⓒ
IC6508	B-10 Ⓕ
IC6509	A-10 Ⓕ
IC6510	A-9 Ⓕ
IC6511	A-8 Ⓒ
IC6511	A-8 Ⓕ
IC6512	A-8 Ⓕ
IC6512	A-8 Ⓕ
IC6513	A-5 Ⓒ
IC6514	A-5 Ⓒ
IC6515	A-5 Ⓒ
IC6516	A-5 Ⓒ
IC6517	A-6 Ⓒ
IC6518	A-3 Ⓒ
IC6519	B-11 Ⓕ
IC6520	A-6 Ⓒ
IC6521	C-12 Ⓕ
IC6522	C-12 Ⓕ
Test Points	
TP6501	A-2 Ⓒ
TP6502	A-3 Ⓒ
TP6503	A-5 Ⓒ
TP6504	A-5 Ⓒ
TP6505	A-5 Ⓒ
TP6506	A-5 Ⓒ
TP6507	A-5 Ⓒ
TP6508	A-5 Ⓒ
TP6509	A-5 Ⓒ
TPG6501	A-3 Ⓒ
TPG6502	A-5 Ⓒ
Adjustment	
VR6501	A-2 Ⓒ
VC6501	A-4 Ⓒ
Connectors	
P304	B-2 Ⓒ
P305	A-3 Ⓒ
P330	A-4 Ⓒ
P331	A-3 Ⓒ
P332	A-6 Ⓒ

ADDRESS INFORMATION
Ⓒ ... COMPONENT SIDE
Ⓕ ... FOIL SIDE

9 10 11 12 13

FR BASE 2 P.C. BOARD (VEP86096D) [FOR PAL]
(VEP86096C) [FOR NTSC]

FR BASE 2	
Transistors	
Q6501	B-1 ©
Q6502	B-9 Ⓕ
Q6503	C-9 Ⓕ
Q6504	C-9 Ⓕ
Q6505	B-9 Ⓕ
Q6506	C-1 ©
Q6507	C-1 ©
Integrated Circuits	
IC6501	B-1 ©
IC6502	A-3 ©
IC6503	A-8 Ⓕ
IC6504	A-3 ©
IC6505	B-5 Ⓕ
IC6506	A-8 Ⓕ
IC6507	C-1 ©
IC6508	C-9 Ⓕ
IC6509	B-1 ©
IC6510	C-2 ©
IC6511	C-1 ©
IC6512	A-2 ©
IC6513	A-2 ©
IC6514	C-1 ©
IC6515	B-2 ©
IC6516	B-1 ©
IC6517	A-2 ©
IC6518	B-1 ©
IC6519	B-1 ©
IC6520	A-2 ©
IC6521	A-4 ©
IC6522	A-3 ©
IC6523	A-3 ©
IC6524	A-6 Ⓕ
IC6525	A-6 Ⓕ
IC6526	A-4 ©
IC6527	A-4 ©
IC6528	A-4 ©
IC6529	A-3 ©
IC6530	A-3 ©
IC6531	A-5 ©
IC6532	A-2 ©
Adjustments	
VR6501	B-1 ©
VR6502	B-1 ©
Connectors	
P301	B-1 ©
P302	C-10 Ⓕ
P333	A-2 ©
P334	A-1 ©

ADDRESS INFORMATION
© ... COMPONENT SIDE
Ⓕ ... FOIL SIDE

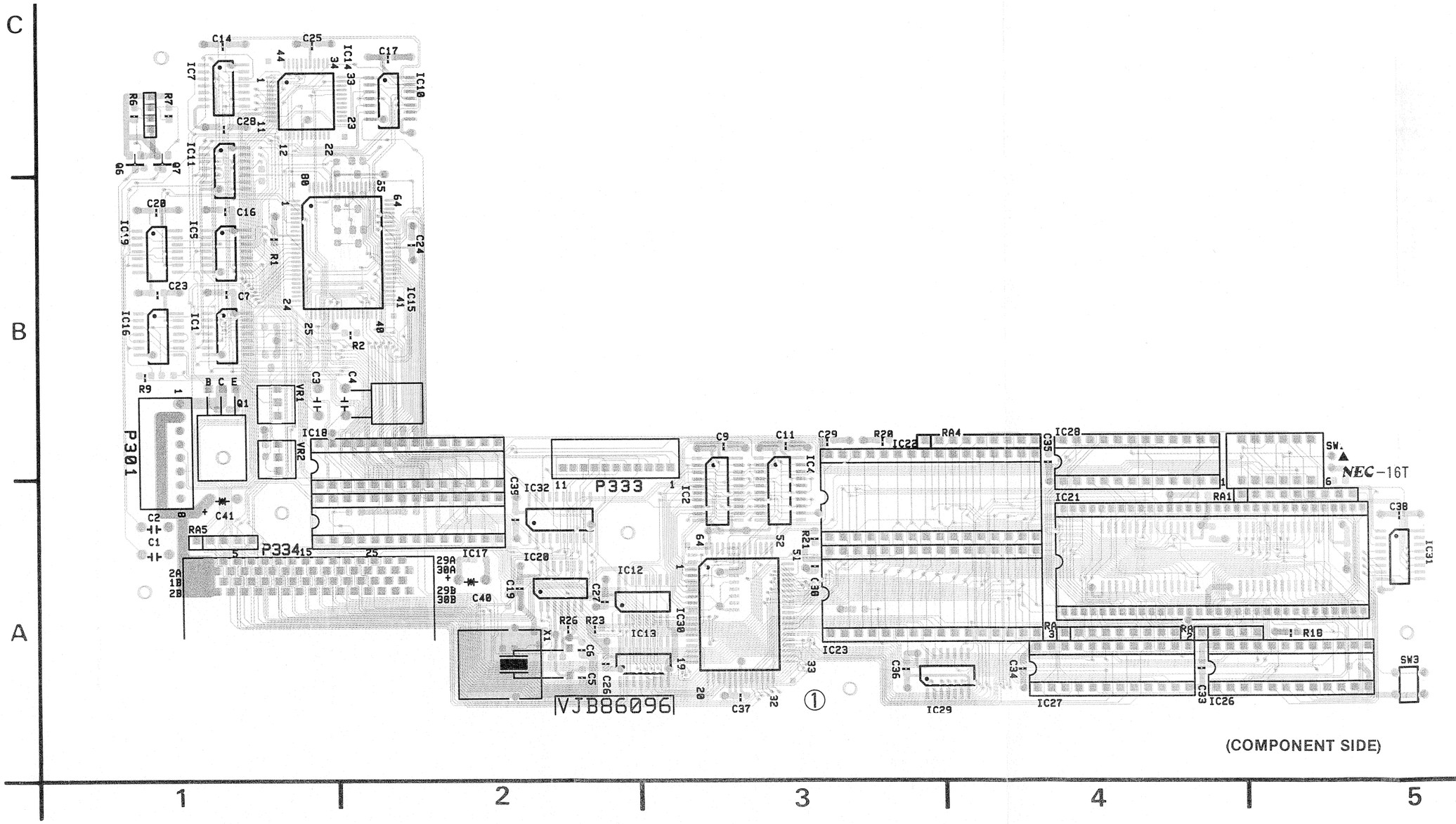

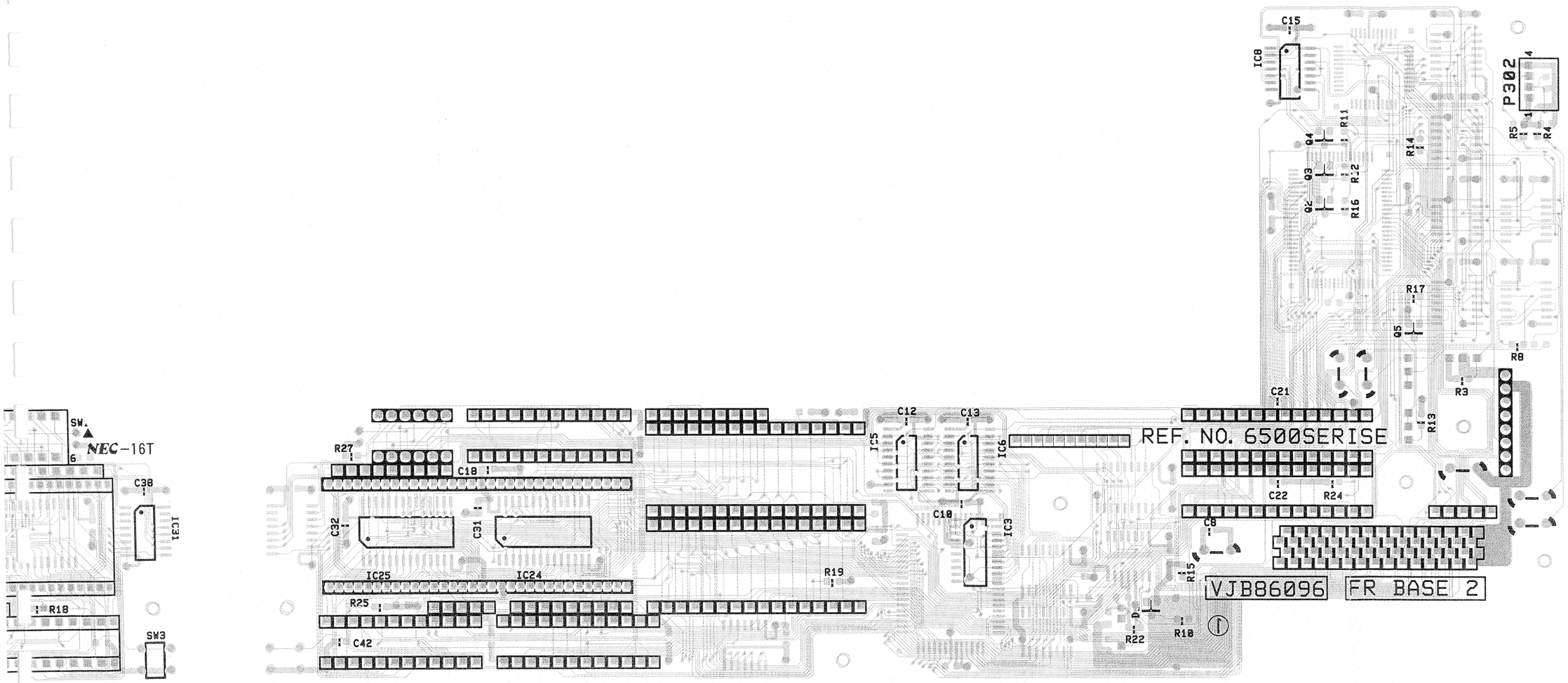

(COMPONENT SIDE) (FOIL SIDE)

5 6 7 8 9

REMOTE JACK 2 P.C. BOARD (VEP80609A)

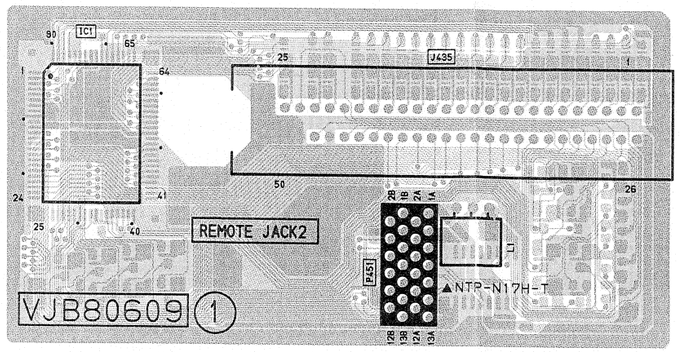

(COMPONENT SIDE)

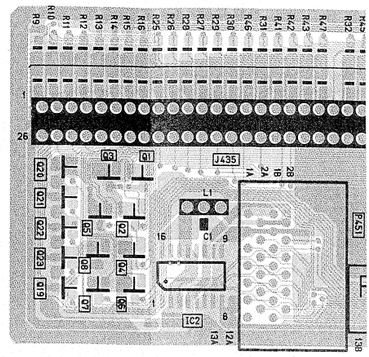

(FOIL SIDE)

REMOTE JACK 1 P.C. BOARD (VEP80590A)

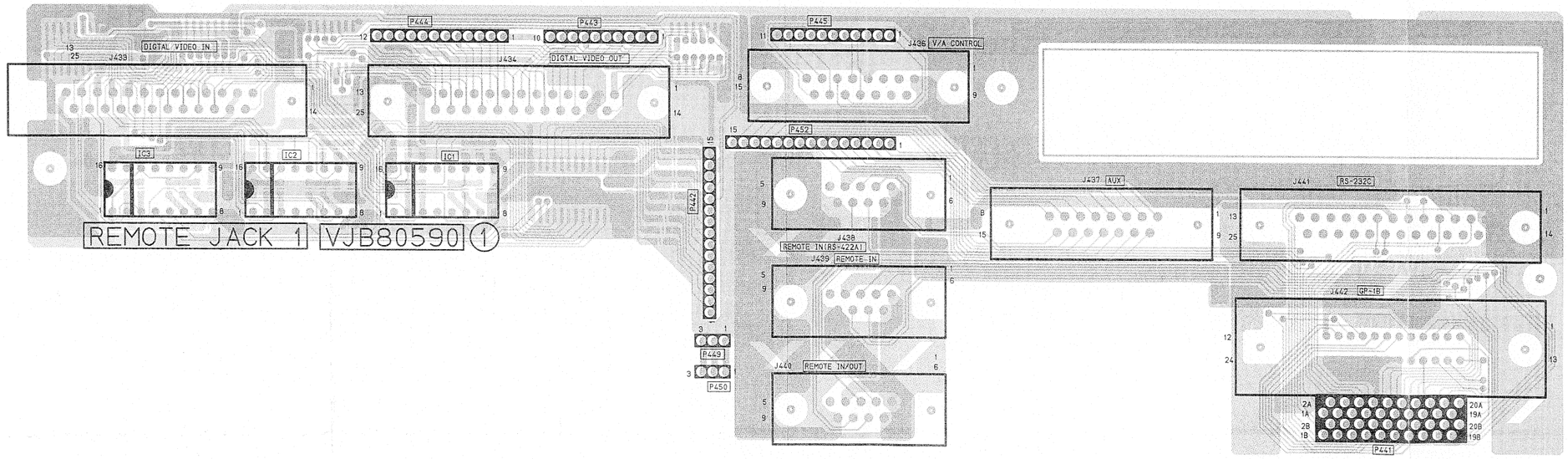

(COMPONENT SIDE)

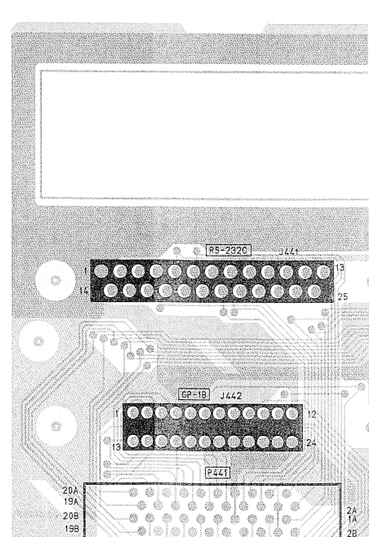

(FOIL SIDE)

REMOTE JACK 3 P.C. BOARD (VEP80589A)

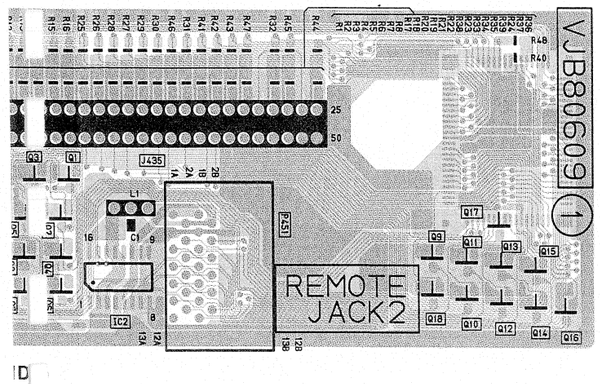

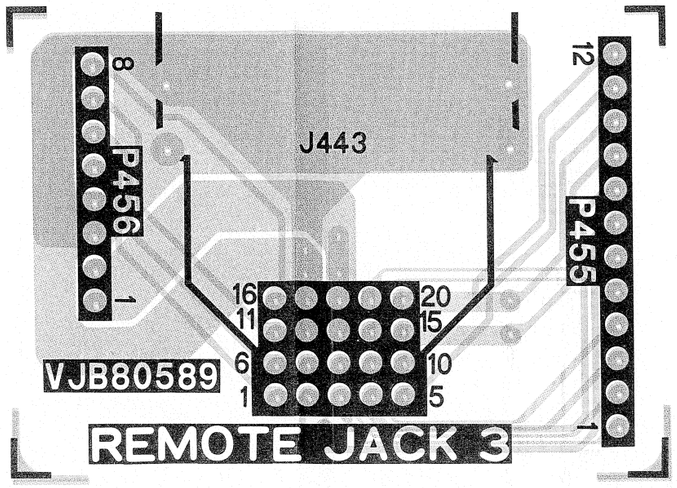

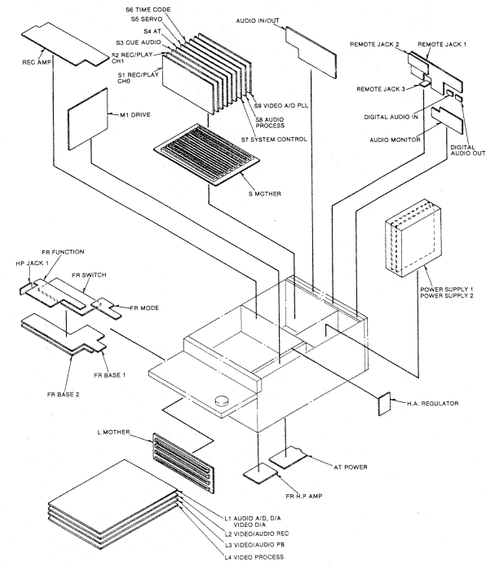

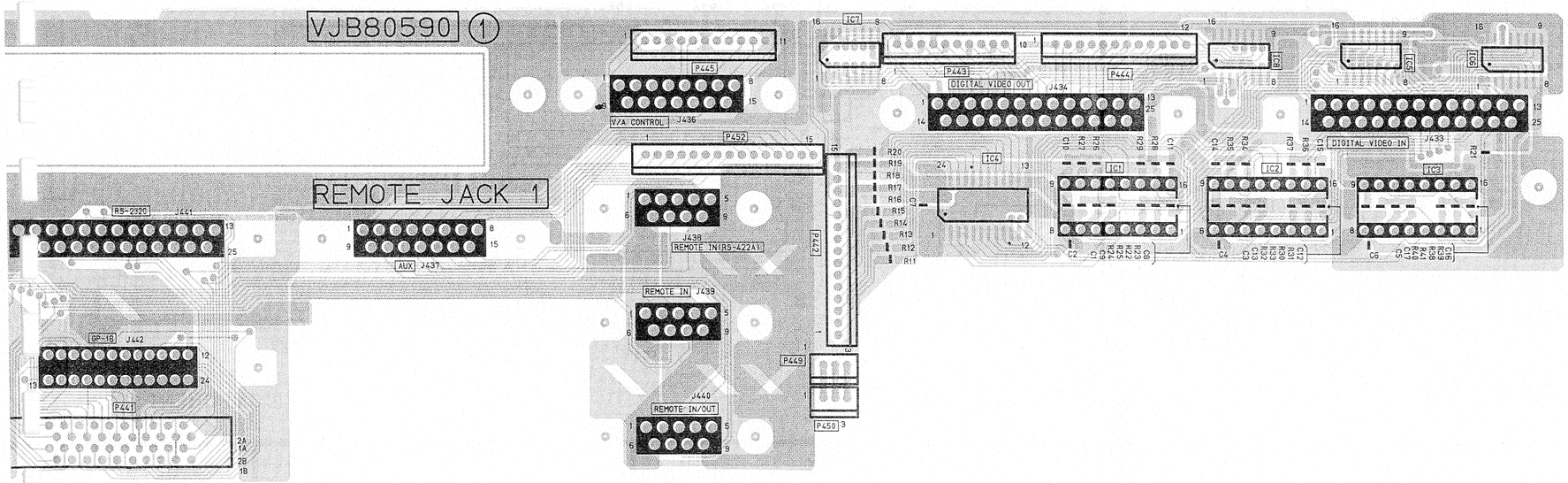

REMOTE JACK 1	
Integrated Circuits	
IC1	B-2 ©
IC1	B-9 Ⓕ
IC2	B-2 ©
IC2	B-10 Ⓕ
IC3	B-1 ©
IC3	B-10 Ⓕ
IC4	B-9 ©
IC4	B-9 Ⓕ
IC5	B-10 Ⓕ
IC6	B-10 Ⓕ
IC7	B-9 Ⓕ
IC8	B-10 Ⓕ
Connectors	
P441	A-5 ©
P441	A-6 Ⓕ
P442	A-3 ©
P442	A-8 Ⓕ
P443	B-2 ©
P443	B-9 Ⓕ
P444	B-2 ©
P444	B-9 Ⓕ
P445	B-3 ©
P445	B-8 Ⓕ
P449	A-3 ©
P449	A-8 Ⓕ
P450	A-3 ©
P450	A-8 Ⓕ
P452	B-3 ©
P452	B-8 Ⓕ

ADDRESS INFORMATION
© ... COMPONENT SIDE
Ⓕ ... FOIL SIDE

AUDIO IN/OUT MONITOR P.C. BOARD (VEP84122A)

AUDIO IN/OUT MONITOR	
Transistors	
Q4001	A-8 Ⓕ
Q4002	A-8 Ⓕ
Q4003	A-8 Ⓕ
Q4004	A-8 Ⓕ
Q4006	A-1 Ⓒ
Q4007	A-10 Ⓕ
Q4008	A-10 Ⓕ
Q4009	A-8 Ⓕ
Q4010	A-9 Ⓕ
Q4467	A-2 Ⓒ
Q4468	A-2 Ⓒ
Integrated Circuits	
IC4001	A-1 Ⓒ
IC4002	A-2 Ⓒ
IC4003	B-3 Ⓒ
Connectors	
P4461	A-5 Ⓒ
P4461	A-6 Ⓕ
P4462	A-5 Ⓒ
P4462	A-6 Ⓕ
P4463	A-4 Ⓒ
P4463	A-7 Ⓕ
P4464	B-3 Ⓒ
P4464	B-7 Ⓕ
P4465	A-4 Ⓒ
P4465	A-7 Ⓕ
P4466	A-3 Ⓒ
P4466	A-7 Ⓕ
P4467	A-9 Ⓕ
P4468	A-8 Ⓕ
P4469	A-3 Ⓒ
P4469	A-8 Ⓕ

ADDRESS INFORMATION
Ⓒ ... COMPONENT SIDE
Ⓕ ... FOIL SIDE

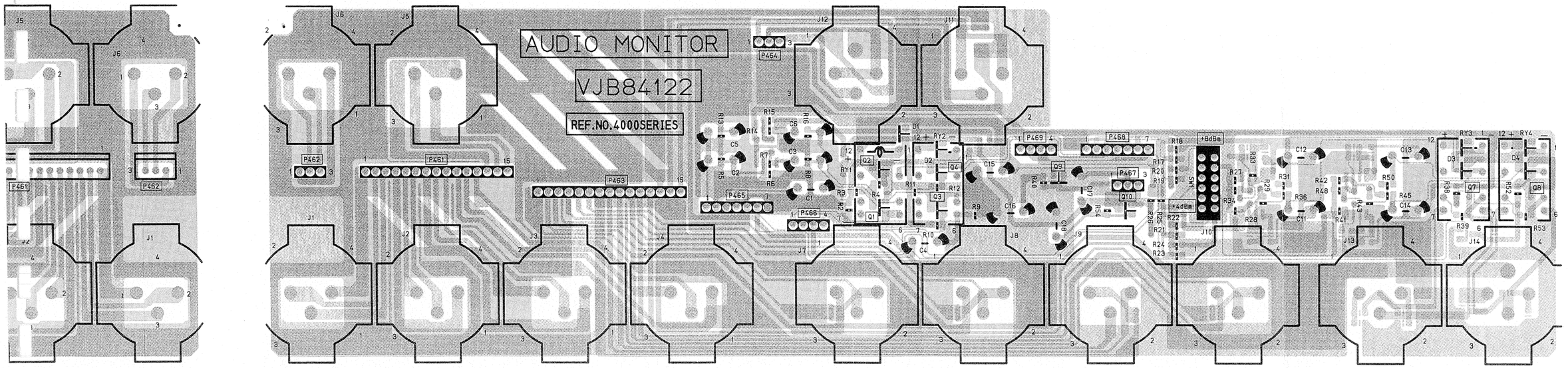
AUDIO MONITOR
VJB84122
REF.NO.4000SERIES
(COMPONENT SIDE)
(FOIL SIDE)
5
6
7
8
9
10

AUDIO IN/OUT P.C. BOARD (VEP84110B) [FOR PAL]
(VEP84110A) [FOR NTSC]

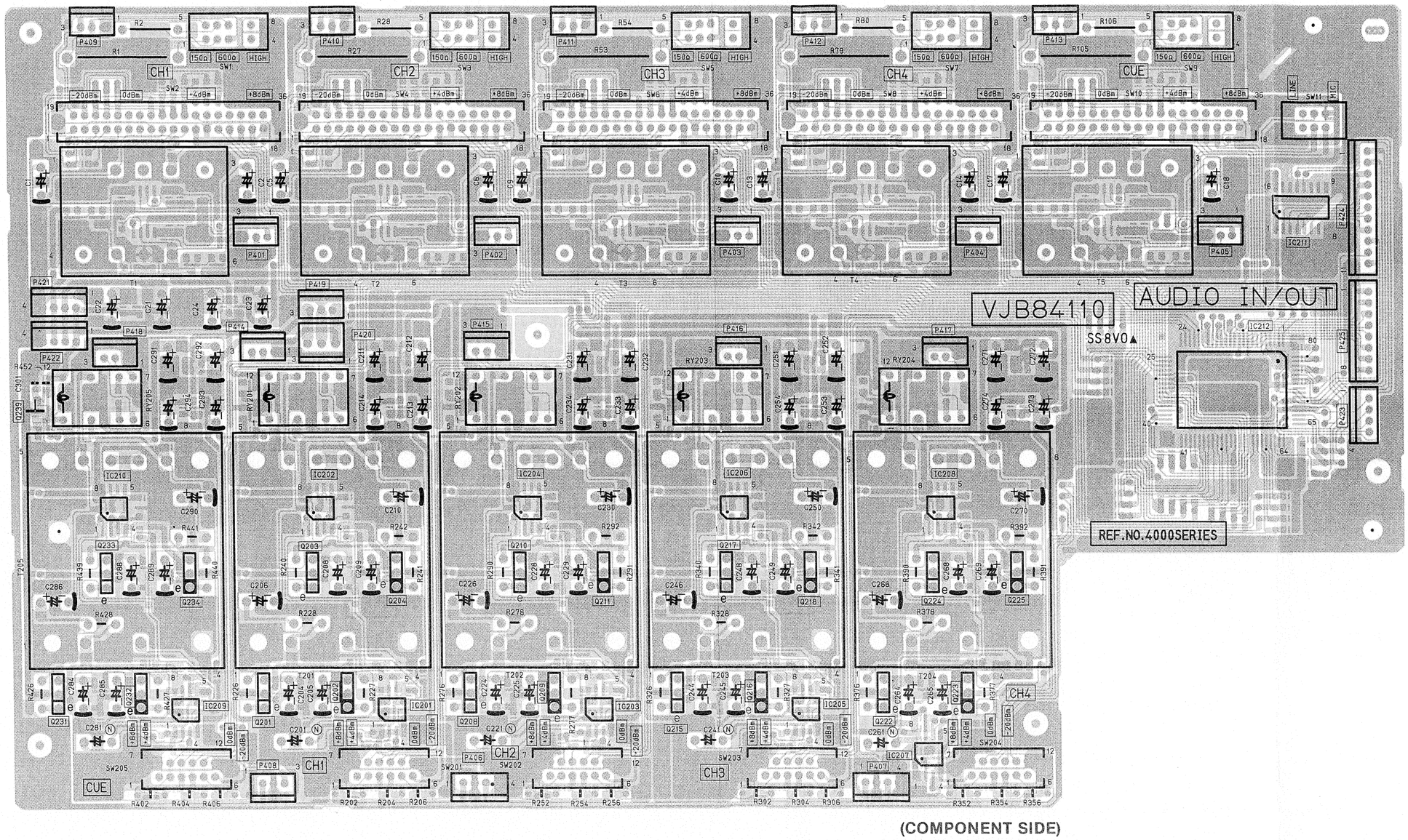

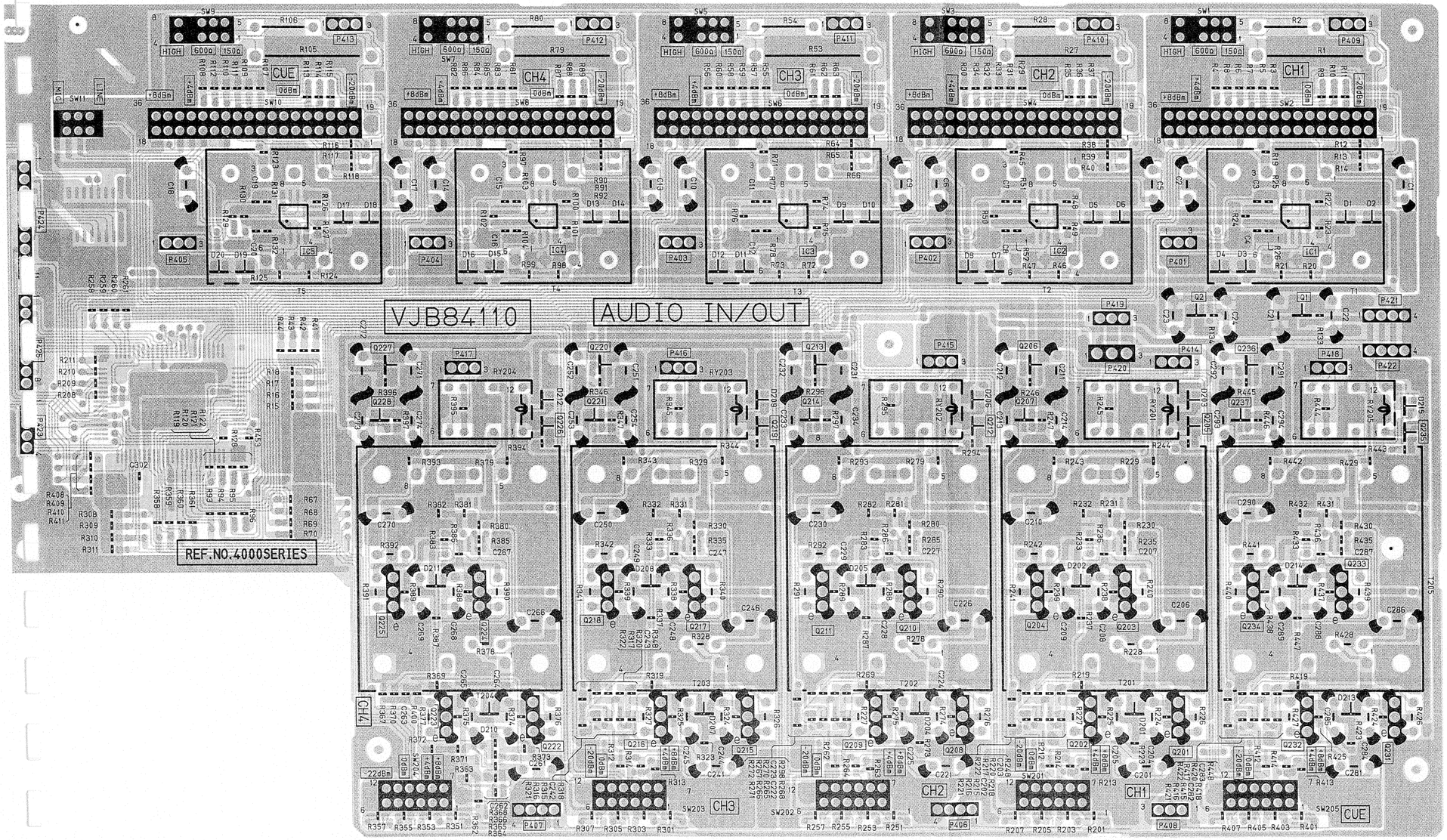

AUDIO IN/OUT			
Transistors		**Connectors**	
Q4001	B-10 Ⓕ	P401	B-1 Ⓒ
Q4002	B-9 Ⓕ	P401	B-9 Ⓕ
Q4201	A-1 Ⓒ	P402	B-2 Ⓒ
Q4201	A-9 Ⓕ	P402	B-8 Ⓕ
Q4202	A-2 Ⓒ	P403	B-3 Ⓒ
Q4202	A-9 Ⓕ	P403	B-8 Ⓕ
Q4205	B-9 Ⓕ	P404	B-4 Ⓒ
Q4206	B-9 Ⓕ	P404	B-7 Ⓕ
Q4207	B-9 Ⓕ	P405	B-5 Ⓒ
Q4208	A-2 Ⓒ	P405	B-6 Ⓕ
Q4208	A-8 Ⓕ	P406	A-2 Ⓒ
Q4209	A-2 Ⓒ	P406	A-8 Ⓕ
Q4209	A-8 Ⓕ	P407	A-3 Ⓒ
Q4212	B-9 Ⓕ	P407	A-7 Ⓕ
Q4213	B-8 Ⓒ	P408	A-2 Ⓒ
Q4214	B-8 Ⓒ	P408	A-9 Ⓕ
Q4215	A-3 Ⓒ	P409	C-1 Ⓒ
Q4215	A-8 Ⓕ	P409	C-10 Ⓕ
Q4216	A-3 Ⓒ	P410	C-2 Ⓒ
Q4216	A-7 Ⓕ	P410	C-9 Ⓕ
Q4219	B-8 Ⓕ	P411	C-2 Ⓒ
Q4220	B-7 Ⓕ	P411	C-8 Ⓕ
Q4221	B-7 Ⓕ	P412	C-3 Ⓒ
Q4222	A-3 Ⓒ	P412	C-7 Ⓕ
Q4222	A-7 Ⓕ	P413	C-4 Ⓒ
Q4223	A-4 Ⓒ	P413	C-7 Ⓕ
Q4223	A-7 Ⓕ	P414	B-1 Ⓒ
Q4226	B-7 Ⓕ	P414	B-9 Ⓕ
Q4227	B-7 Ⓕ	P415	B-2 Ⓒ
Q4228	B-7 Ⓕ	P415	B-8 Ⓕ
Q4231	A-1 Ⓒ	P416	B-3 Ⓒ
Q4231	A-10 Ⓕ	P416	B-8 Ⓕ
Q4232	A-1 Ⓒ	P417	B-4 Ⓒ
Q4232	A-9 Ⓕ	P417	B-7 Ⓕ
Q4235	B-10 Ⓕ	P418	B-1 Ⓒ
Q4236	B-9 Ⓕ	P418	B-10 Ⓕ
Q4237	B-9 Ⓕ	P419	B-2 Ⓒ
Q4239	B-1 Ⓕ	P419	B-9 Ⓕ
Integrated Circuits		P420	B-2 Ⓒ
		P420	B-9 Ⓕ
IC4001	C-10 Ⓕ	P421	B-1 Ⓒ
IC4002	C-9 Ⓕ	P421	B-10 Ⓕ
IC4003	C-8 Ⓕ	P422	B-1 Ⓒ
IC4004	C-7 Ⓕ	P422	B-10 Ⓕ
IC4005	C-6 Ⓕ	P423	B-5 Ⓒ
IC4201	A-2 Ⓒ	P423	B-6 Ⓕ
IC4203	A-3 Ⓒ	P424	C-5 Ⓒ
IC4205	A-3 Ⓒ	C424	C-6 Ⓕ
IC4207	A-4 Ⓒ	C425	B-5 Ⓒ
IC4209	A-1 Ⓒ	C425	B-6 Ⓕ
IC4211	C-5 Ⓒ		
IC4212	B-5 Ⓒ		

ADDRESS INFORMATION
Ⓒ... COMPONENT SIDE
Ⓕ... FOIL SIDE

6 7 8 9 10

BUFFER AMP P.C. BOARD (VEP85028A)

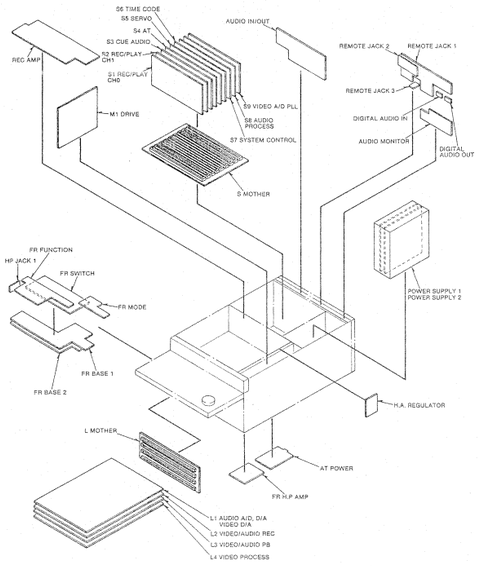

BUFFER AMP		
Transistors		
Q5001	B-6	Ⓕ
Q5002	B-6	Ⓕ
Q5003	B-6	Ⓕ
Q5004	C-1	Ⓒ
Q5005	B-5	Ⓕ
Q5006	B-6	Ⓕ
Q5007	B-5	Ⓕ
Q5008	C-2	Ⓒ
Q5009	B-4	Ⓕ
Q5010	B-4	Ⓕ
Q5011	B-4	Ⓕ
Q5012	C-2	Ⓒ
Q5013	B-4	Ⓕ
Q5014	B-4	Ⓕ
Q5015	B-4	Ⓕ
Q5016	C-3	Ⓒ
Connectors		
P531	A-2	Ⓒ
P531	A-5	Ⓕ
P532	A-3	Ⓒ
P532	A-4	Ⓕ
P533	C-3	Ⓒ
P533	C-4	Ⓕ
P534	C-2	Ⓒ
P534	C-5	Ⓕ
P536	C-1	Ⓒ
P536	C-6	Ⓕ
P537	A-1	Ⓒ
P537	A-5	Ⓕ
P538	A-1	Ⓒ
P538	A-6	Ⓕ

ADDRESS INFORMATION
Ⓒ... COMPONENT SIDE
Ⓕ... FOIL SIDE

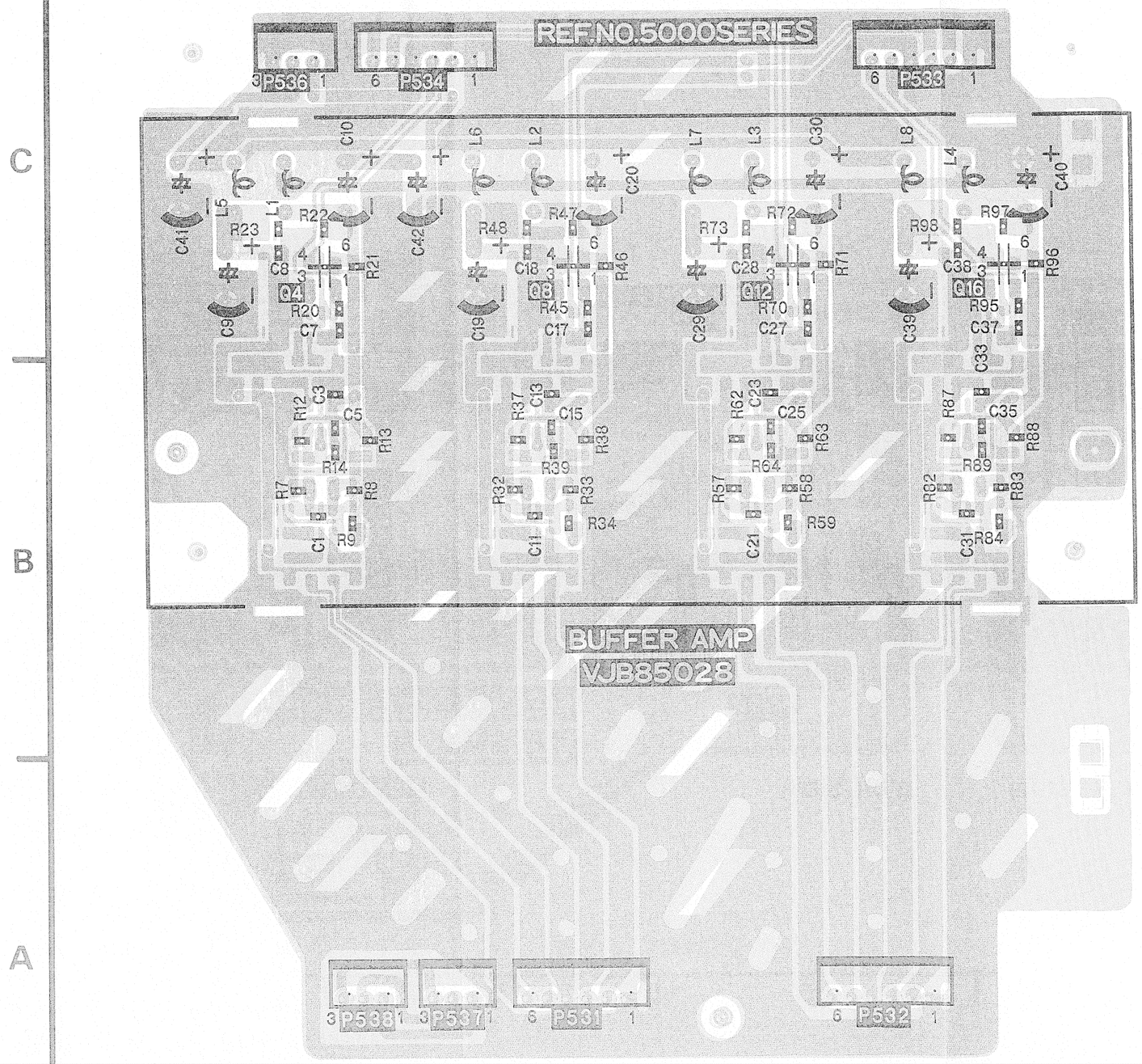

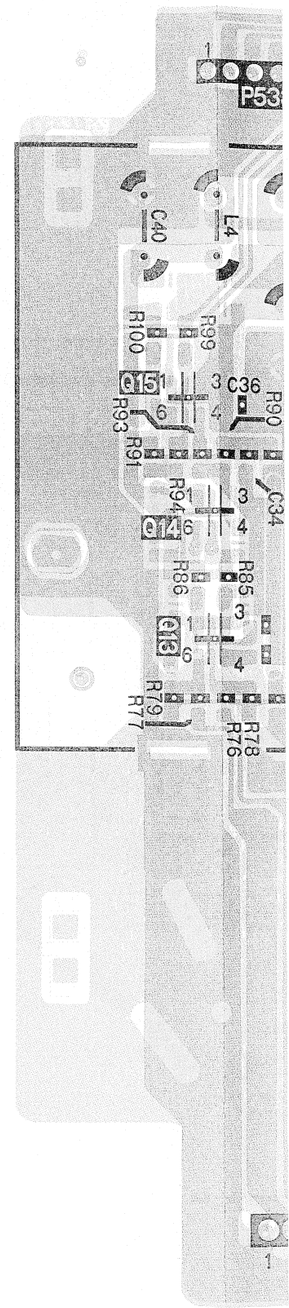

C B A

1 2 3 4

4—3—35

OARD (VEP85028A)

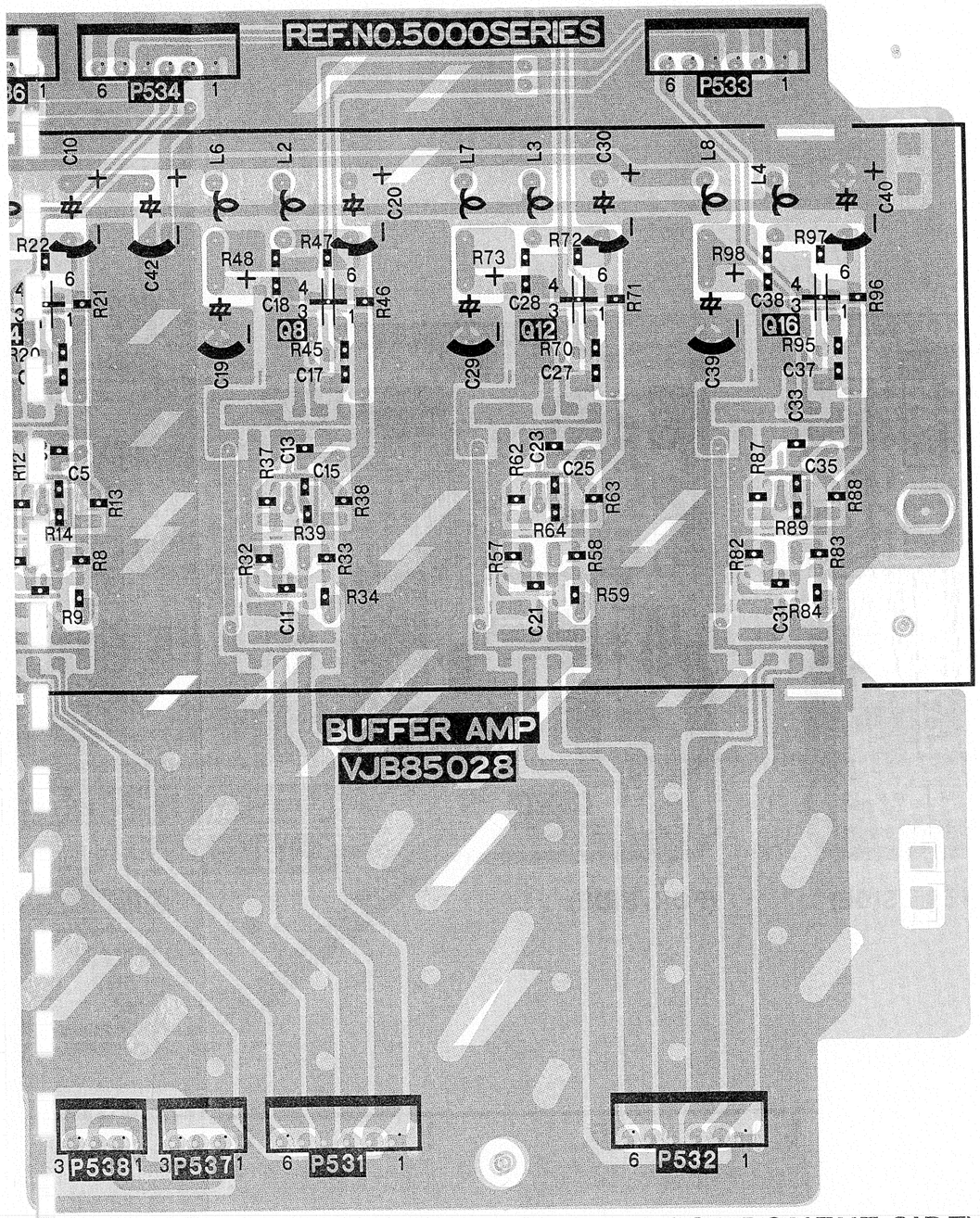

(COMPONENT SIDE)

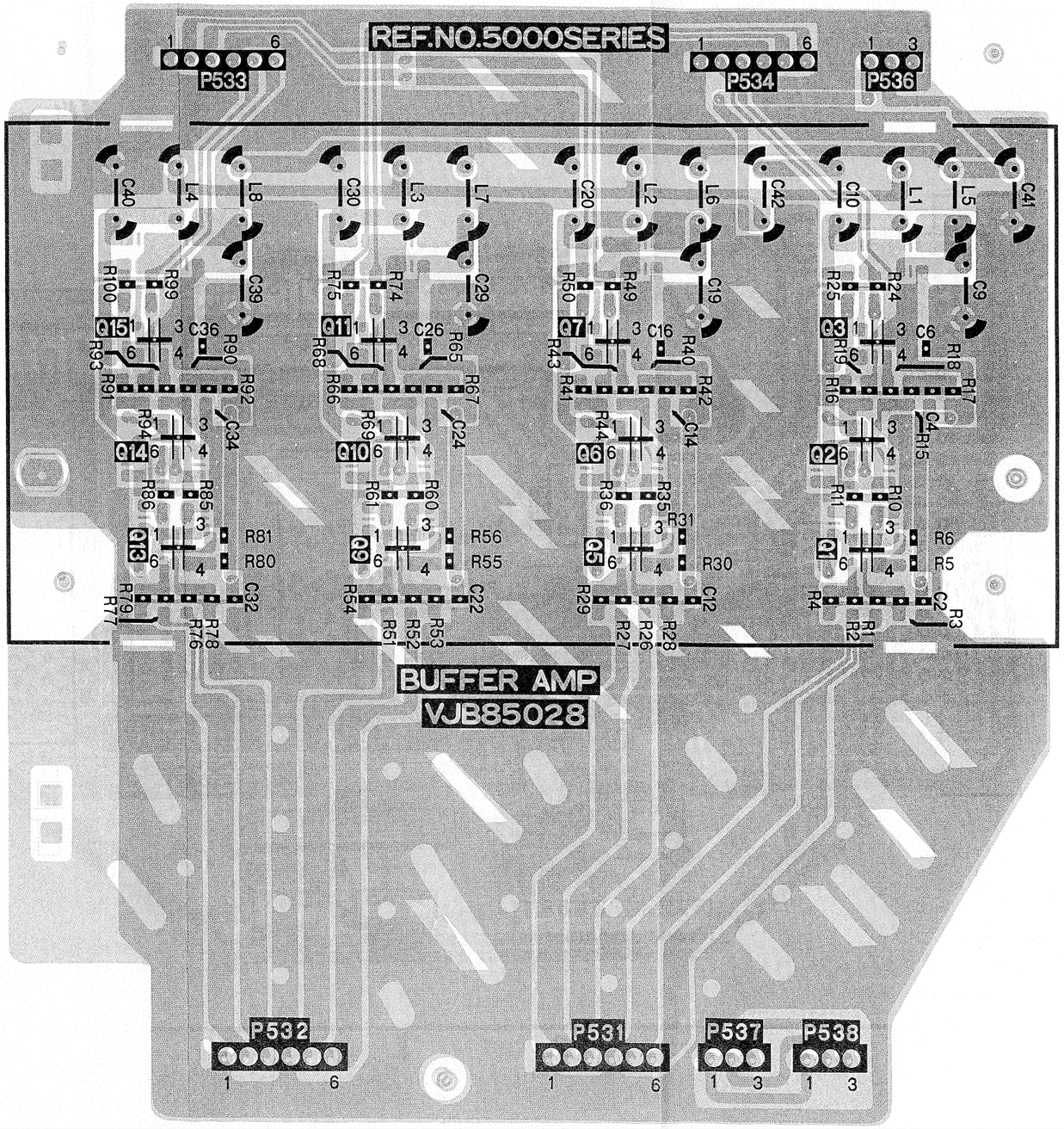

(FOIL SIDE)

MECH I/F P.C. BOARD (VEP80592A)

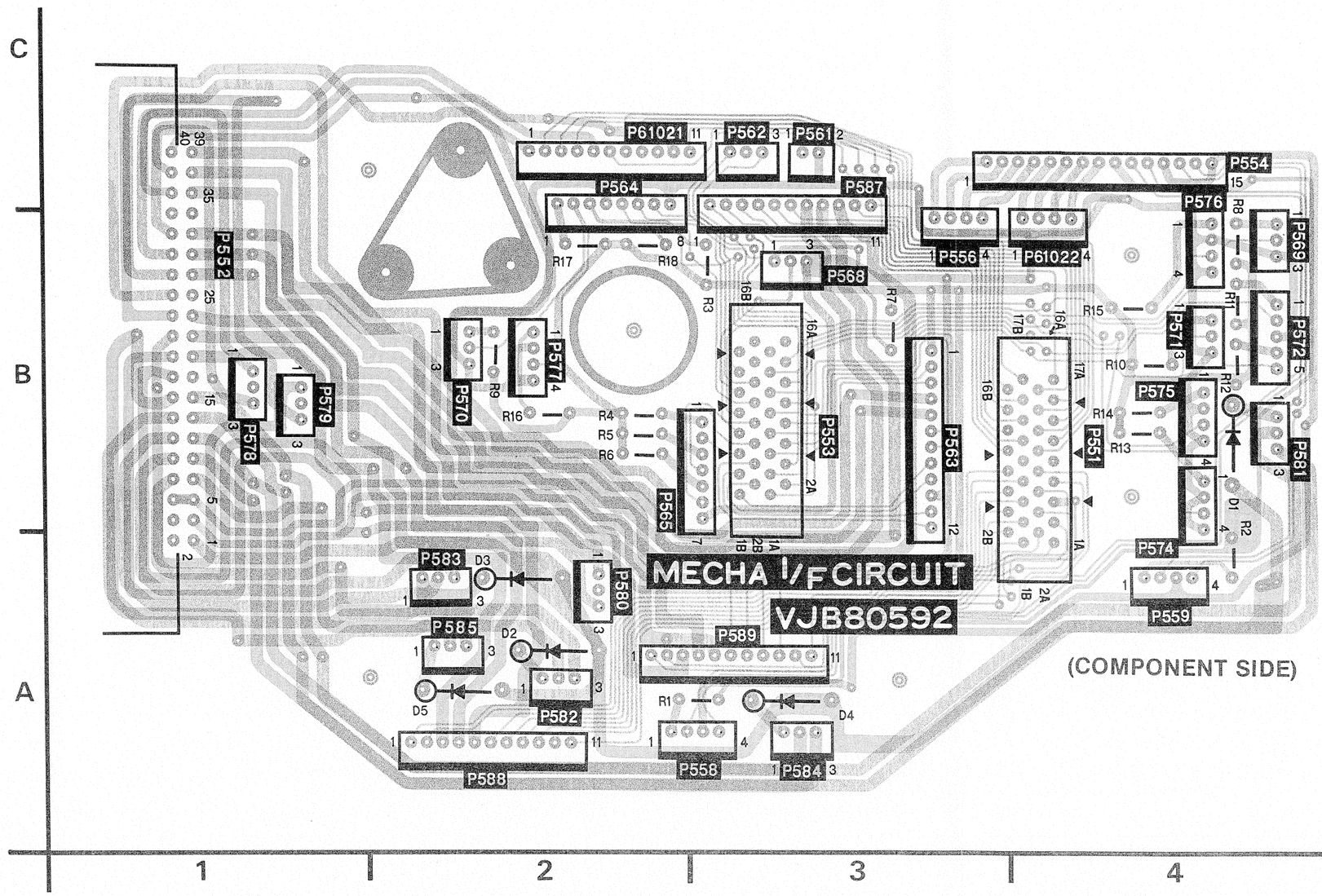

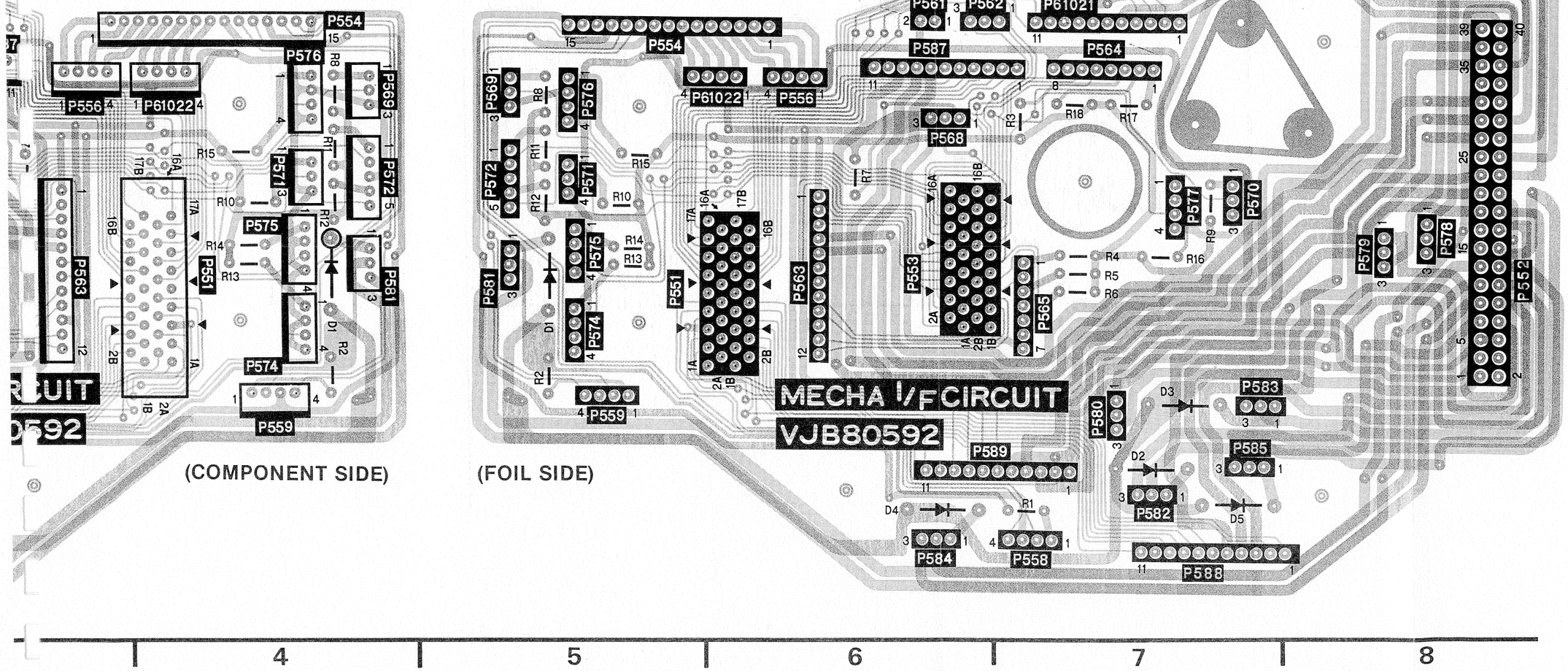

MECH I/F	
Connectors	
P551	B-4 Ⓒ
P551	B-6 Ⓕ
P552	B-1 Ⓒ
P552	B-8 Ⓕ
P553	B-3 Ⓒ
P553	B-6 Ⓕ
P554	C-4 Ⓒ
P554	C-5 Ⓕ
P556	B-3 Ⓒ
P556	B-6 Ⓕ
P558	A-3 Ⓒ
P558	A-7 Ⓕ
P559	A-4 Ⓒ
P559	A-5 Ⓕ
P561	C-3 Ⓒ
P561	C-6 Ⓕ
P562	C-3 Ⓒ
P562	C-6 Ⓕ
P563	B-3 Ⓒ
P563	B-6 Ⓕ
P564	C-2 Ⓒ
P564	C-7 Ⓕ
P565	B-2 Ⓒ
P565	B-7 Ⓕ
P568	B-3 Ⓒ
P568	B-6 Ⓕ
P569	B-4 Ⓒ
P569	B-5 Ⓕ
P570	B-2 Ⓒ
P570	B-7 Ⓕ
P571	B-4 Ⓒ
P571	B-5 Ⓕ
P572	B-4 Ⓒ
P572	B-5 Ⓕ
P574	B-4 Ⓒ
P574	B-5 Ⓕ
P575	B-4 Ⓒ
P575	B-5 Ⓕ
P576	B-4 Ⓒ
P576	B-5 Ⓕ
P577	B-2 Ⓒ
P577	B-7 Ⓕ
P578	B-1 Ⓒ
P578	B-8 Ⓕ
P579	B-1 Ⓒ
P579	B-8 Ⓕ
P580	A-2 Ⓒ
P580	A-7 Ⓕ
P581	B-4 Ⓒ
P581	B-5 Ⓕ
P582	A-2 Ⓒ
P582	A-7 Ⓕ
P583	A-2 Ⓒ
P583	A-7 Ⓕ
P584	A-3 Ⓒ
P584	A-6 Ⓕ
P585	A-2 Ⓒ
P585	A-7 Ⓕ
P587	C-3 Ⓒ
P587	C-6 Ⓕ
P588	A-2 Ⓒ
P588	A-7 Ⓕ
P589	A-3 Ⓒ
P589	A-6 Ⓕ
P61021	C-2 Ⓒ
P61021	C-7 Ⓕ
P61022	B-4 Ⓒ
P61022	B-6 Ⓕ

ADDRESS INFORMATION
Ⓒ... COMPONENT SIDE
Ⓕ... FOIL SIDE

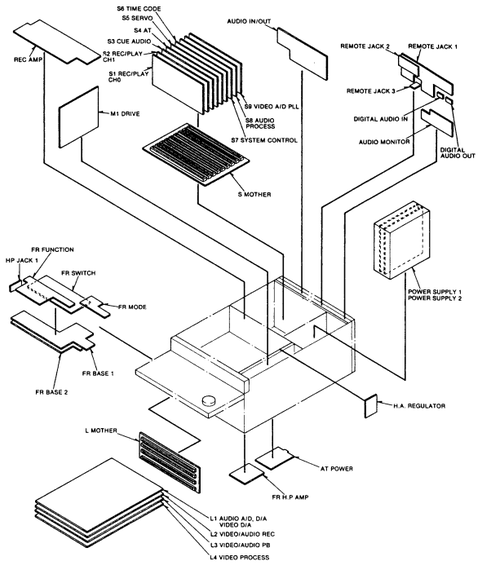

DIGITAL AUDIO OUT P.C. BOARD (VEP84126A)

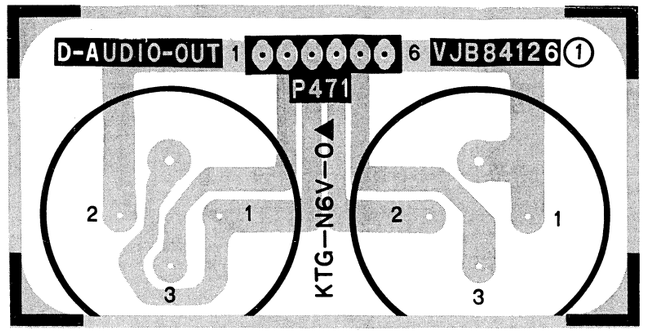

PHOTO TR P.C.B. (VEP80652A)

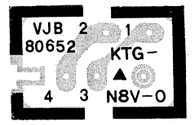

LED (R) P.C.B. (VEP80642A)

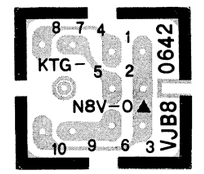

PHOTO TR (S) P.C.B. (VEP80655A)

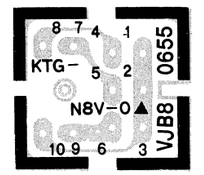

LED P.C.B. (VEP80641A)

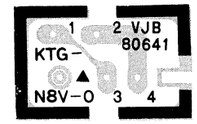

B

DIGITAL AUDIO IN P.C. BOARD (VEP84125A)

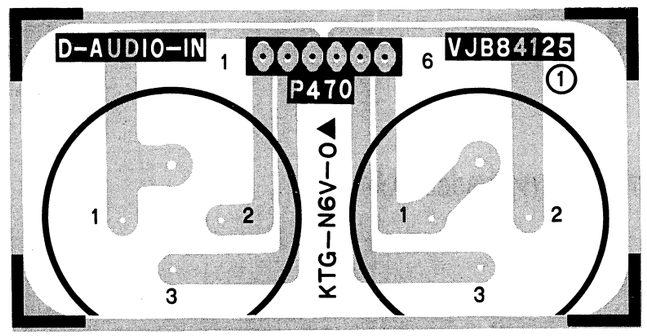

HP JACK 1 P.C. BOARD (VEP80588A)

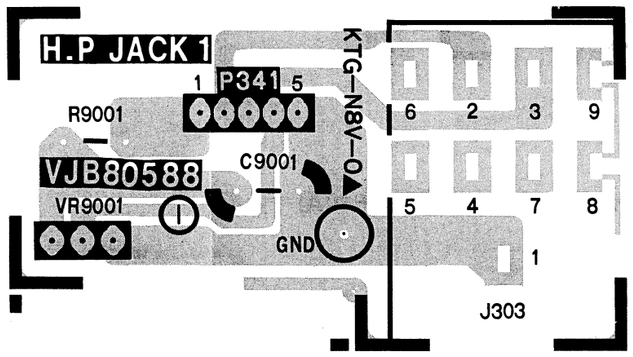

A

1 2 3

4—3—37

S REEL MOTOR CONNECTION (VEP80644A)

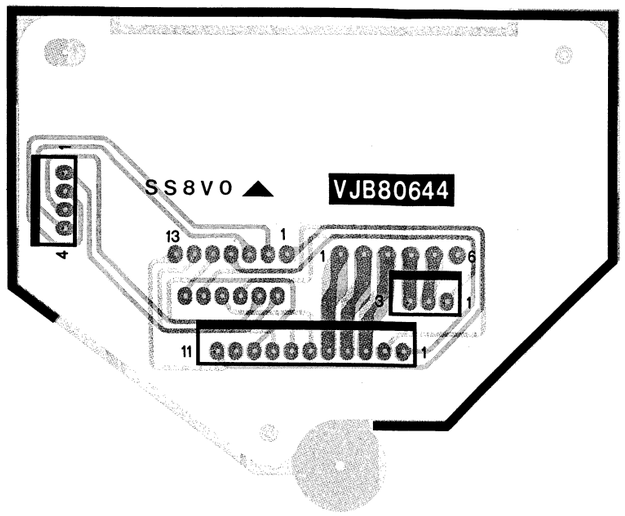

T REEL MOTOR CONNECTION (VEP80645A)

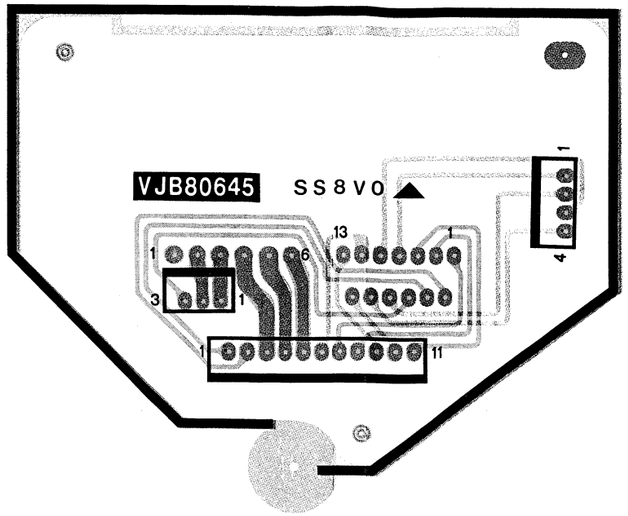

CONNECTION (B) P.C.B. (VEP80654A)

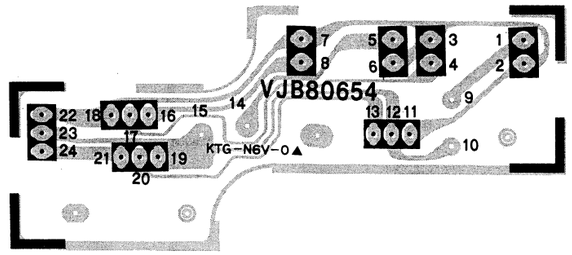

SUB LOADING DET P.C.B. (VEP80458B)

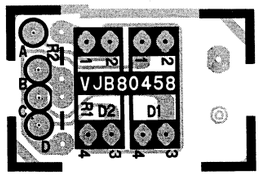

M PHOTO SENSOR P.C.B. (VEP80639A)

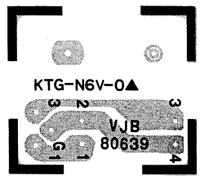

POSITION DET SENSOR P.C.B. (VEP80661A)

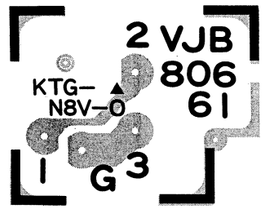

PHOTO P.C.B. (VEP80640A)

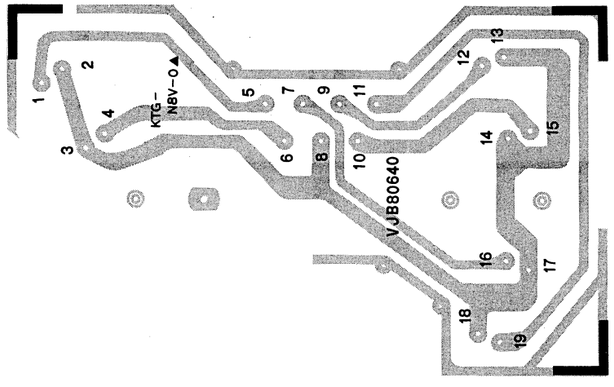

CONNECTION A (VEP80653A)

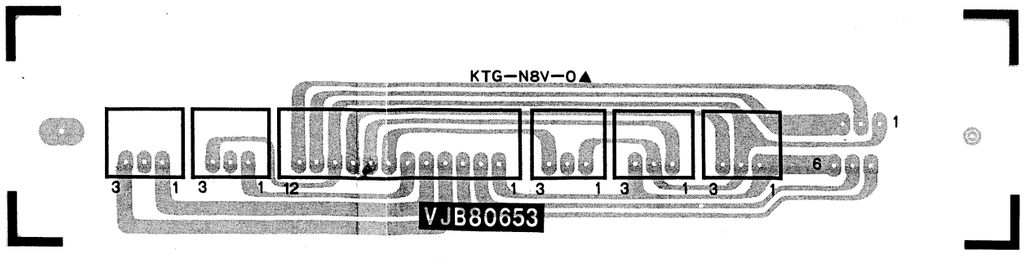

DRUM CONNECTION (VEP80658A)

D C B A

1 2 3 4 5 6

4—3—38

FR HP AMP P.C. BOARD (VEP84108A)

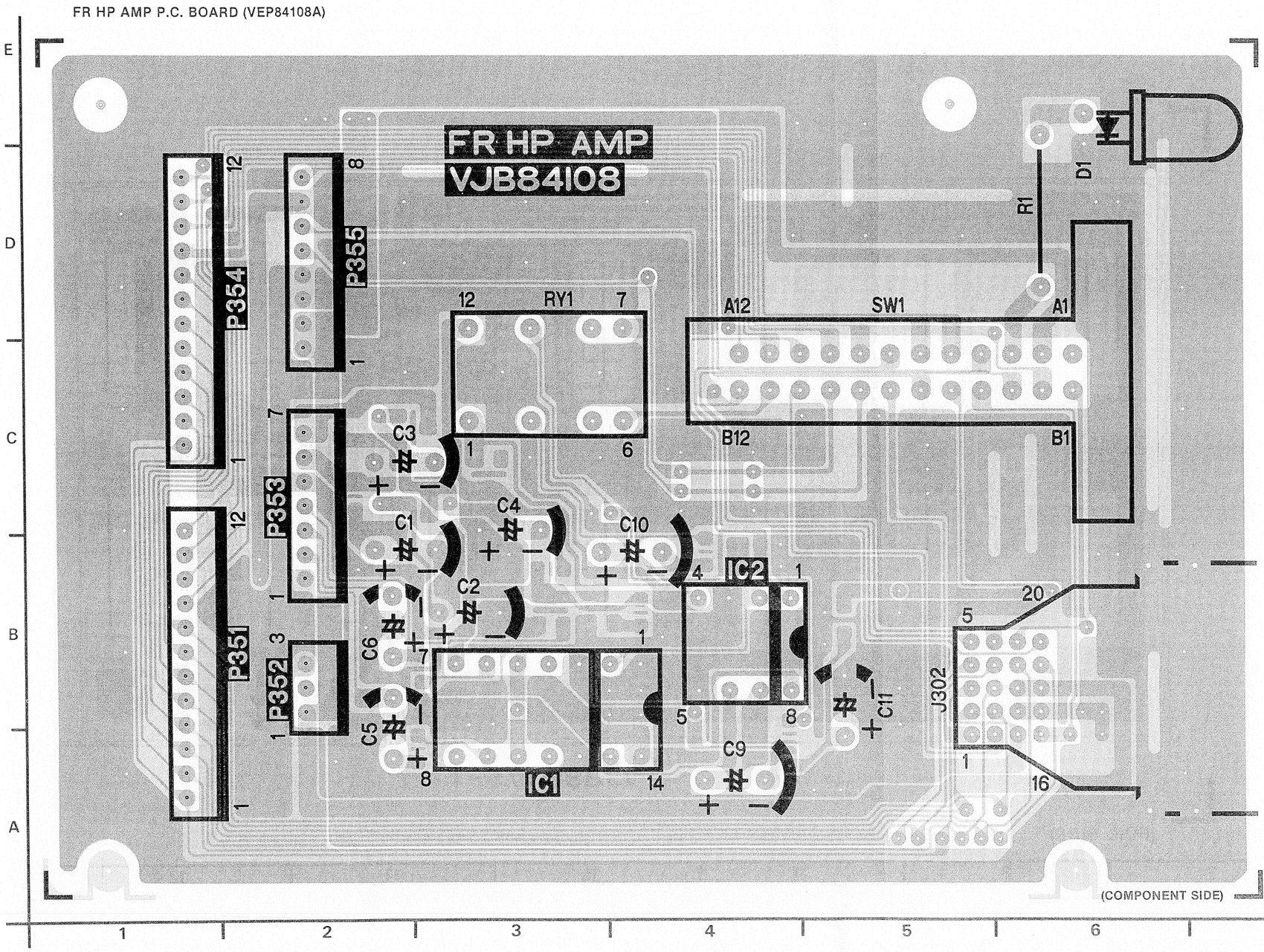

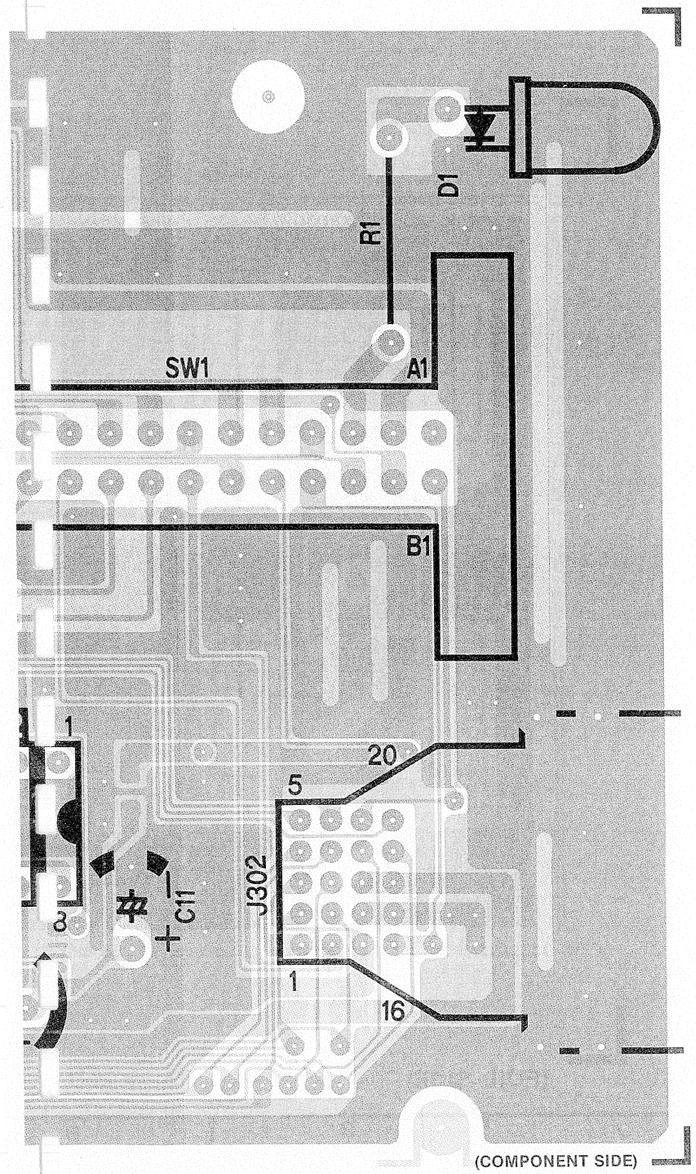

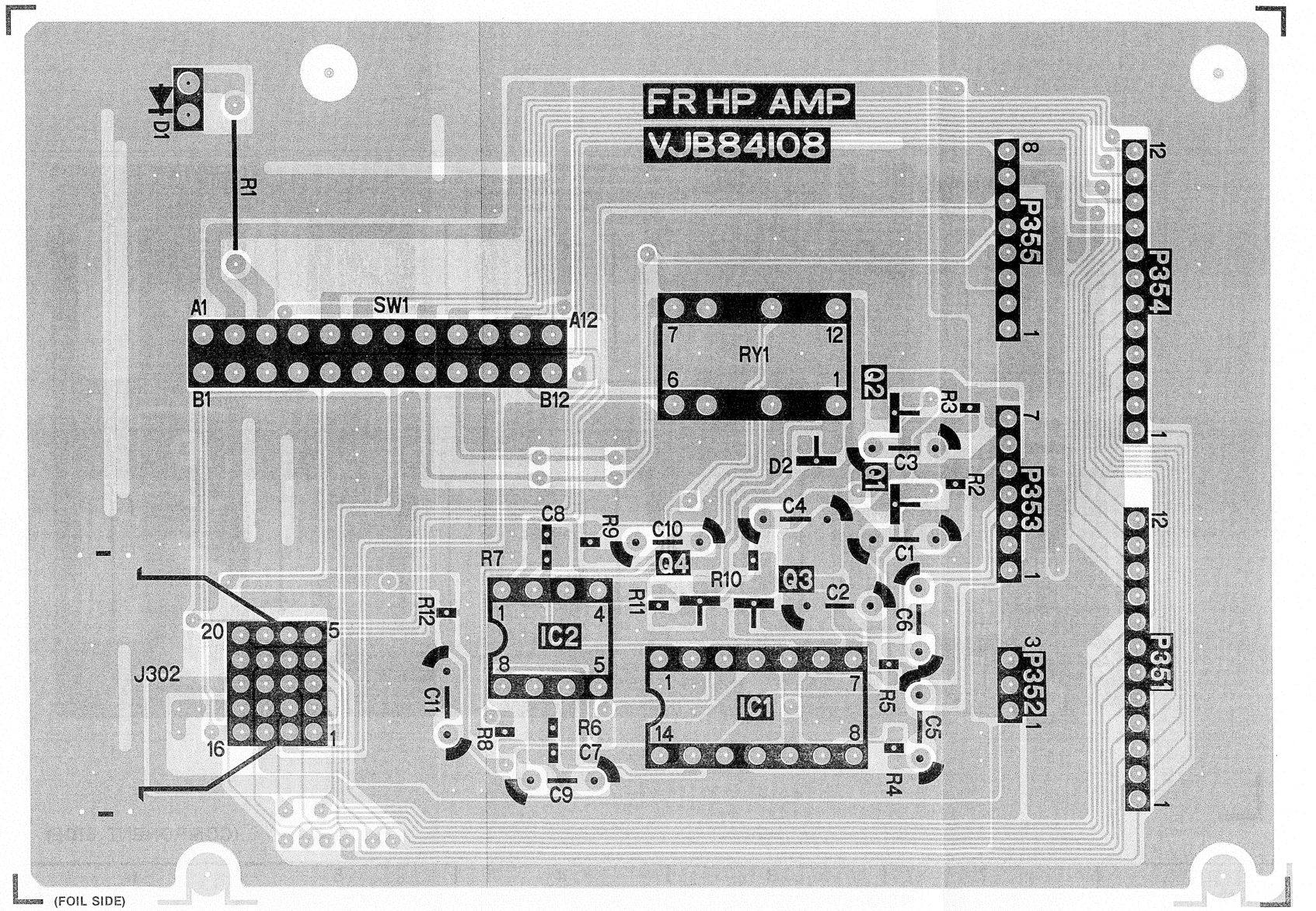

5 6 7 8 9 10 11 12 13

VIDEO IN/OUT P.C. BOARD (VEP88075B)

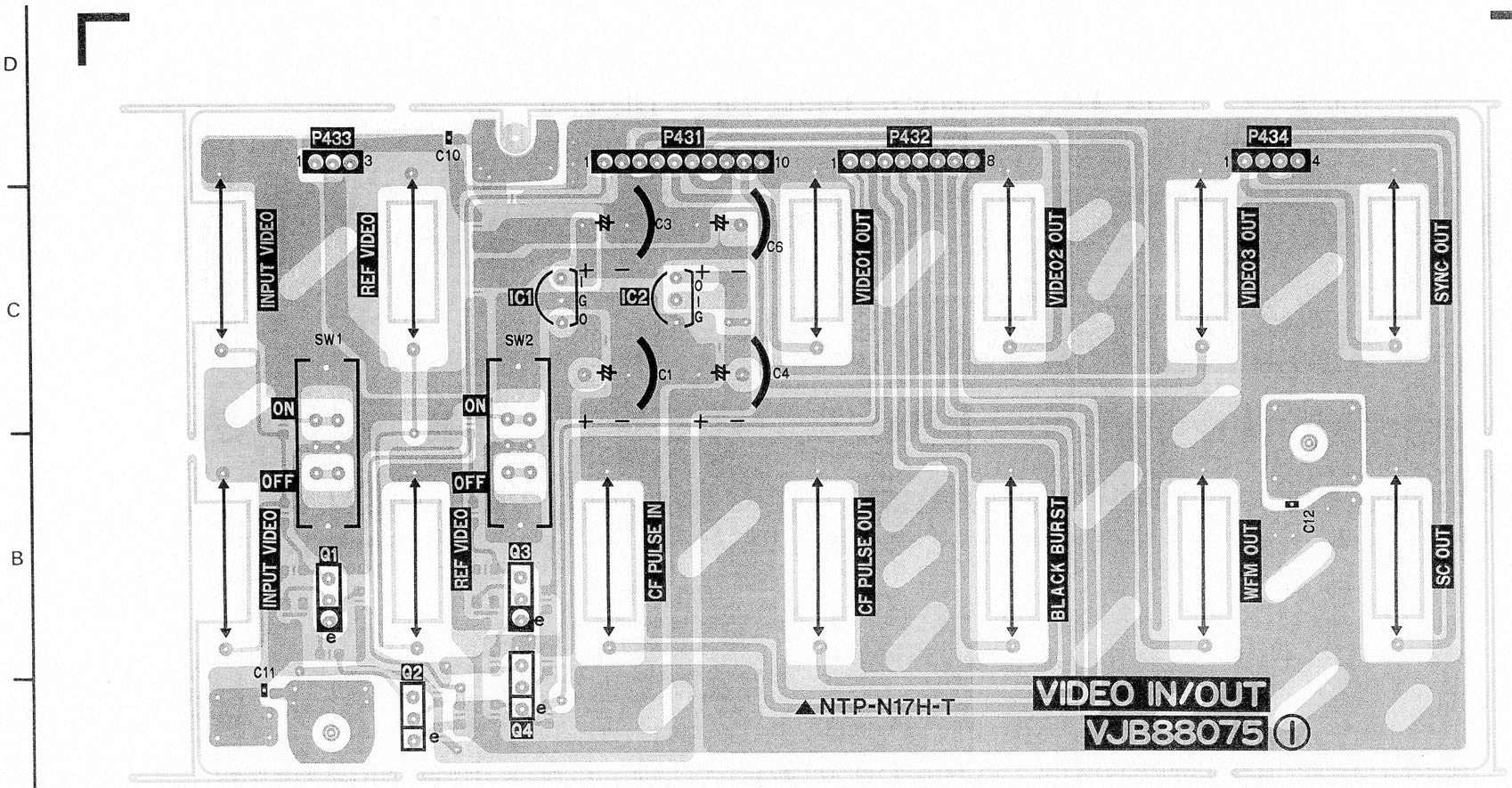

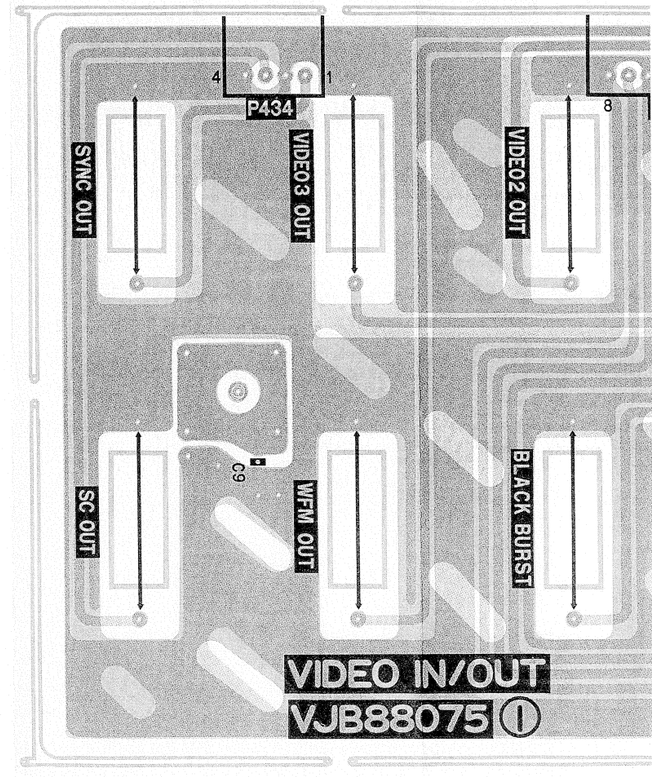

(COMPONENT SIDE)

(FOIL SIDE)

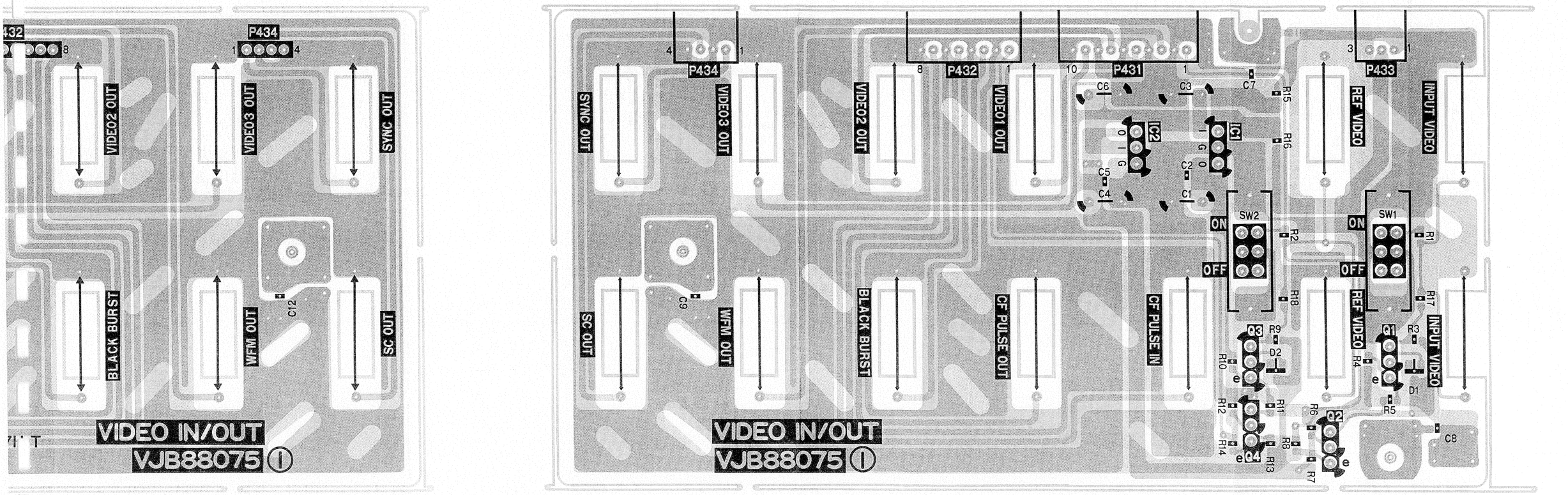

VJB88075-1

(COMPONENT SIDE) (FOIL SIDE)

5 6 7 8 9 10 11 12

EJECT P.C. BOARD (VEP80591A)

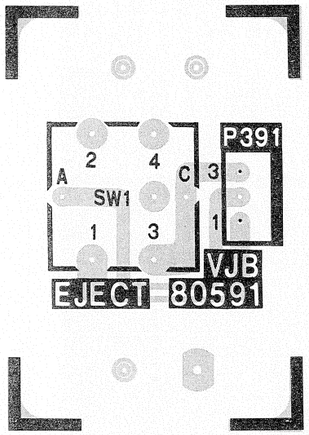

HEAD CONNECTION P.C. BOARD (VEP84136A)

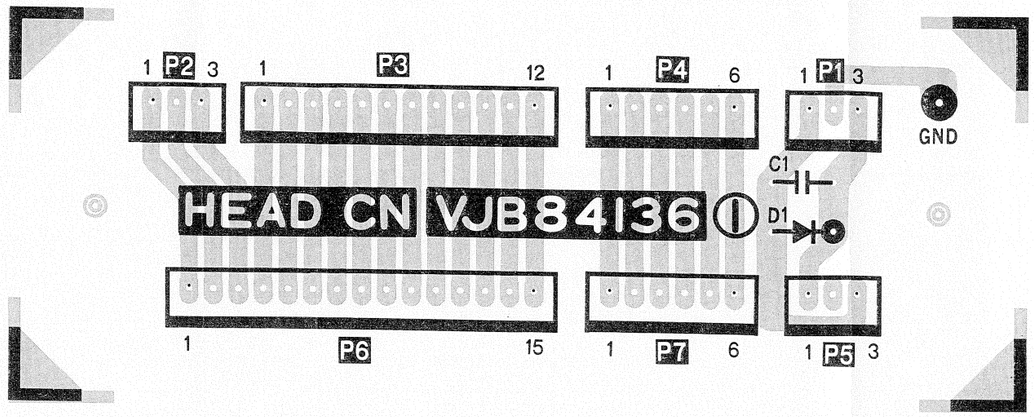

AUTO OFF P.C. BOARD (VEP80627A)

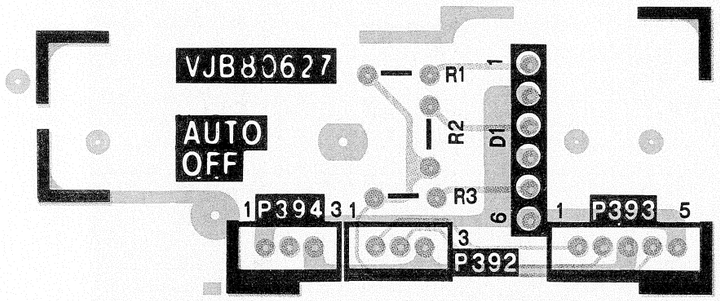

POWER LED P.C. BOARD (VEP80628A)

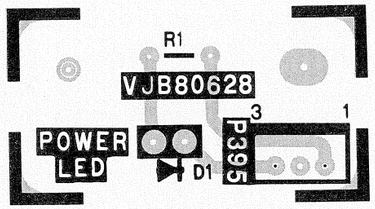

TENSION I/F P.C. BOARD (VEP80306B)

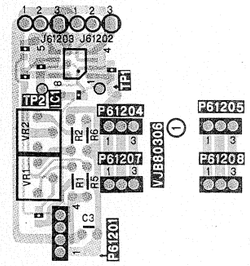

4—3—41

S EXTENSION BOARD (VFK0703)

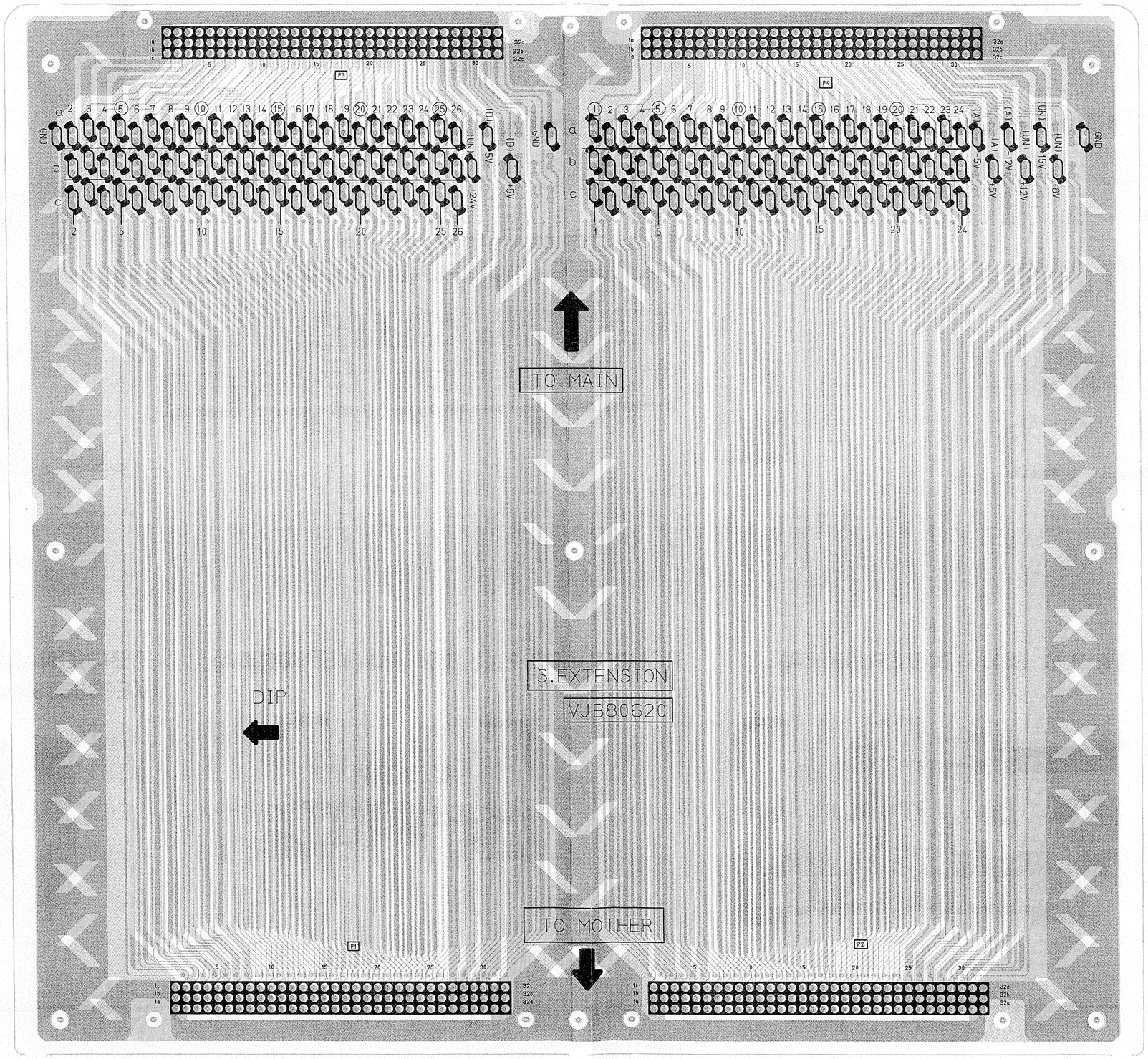

4—3—42

Service Manual

Exploded Views
Mechanical Parts List
Electrical Parts List

Note:
1. *Be sure to make your orders of replacement parts according to this list.
2. Unless otherwise specified, all resistors are in OHMS, K=1,000 OHMS, all capacitors are in MICROFARADS (μF), P=$\mu\mu$F.
3. The P.C.Board units marked with "■" shown below the main assembled parts.
4. The parts marked with Ⓔ on the exploded view show the electric parts.
5. IMPORTANT SAFETY NOTICE
   Components identified with the mark < ! > have the special characteristics for safety. When replacing any of these components, use only the same type.

<<Abbreviations for part>>

<NAME>		<DESCRIPTIONS>
C. CAPACITOR		: CERAMIC CAPACITOR
C. CAPACITOR	CH	: CERAMIC CHIP CAPACITOR
E. CAPACITOR		: ELECTROLYTIC CAPACITOR
G. CAPACITOR		: GLASS CAPACITOR
M. CAPACITOR		: MICA CAPACITOR
P. CAPACITOR		: PLASTIC FILM CAPACITOR
S. CAPACITOR		: SEMI-CONDUCTOR CAPACITOR
T. CAPACITOR		: TANTALUM CAPACITOR
TRIMMER		: TRIMMER
C. RESISTOR		: CARBON RESISTOR
F. RESISTOR		: FUSE RESISTOR
M. RESISTOR		: METAL OXSIDE RESISTOR
M. RESISTOR	CH	: METAL OXSIDE CHIP RESISTOR
S. RESISTOR		: SOLID RESISTOR
V. RESISTOR		: VARIABLE RESISTOR
W. RESISTOR		: WIRE WOUND RESISTOR
COMBI. TR-R		: TRANSISTOR-RESISTOR COMBINATION PARTS
COMBI. R-R		: RESISTOR-RESISTOR COMBINATION PARTS
COMBI. C-R		: CAPACITOR-RESISTOR COMBINATION PARTS
COMBI. C-R-R		: CAPACITOR-RESISTOR-COIL COMBINATION PARTS
P.C. BOARD		: PRINTED CIRCUIT BOARD
W/COMPONENT		: WITH COMPONENT

Panasonic
Broadcast Systems

CONTENTS

MECHANICAL REPLACEMENT PARTS LIST

CASSETTE COMPARTMENT ASSEMBLY 5-1
MECHANICAL COMPONENT ASSEMBLY (1) 5-3
MECHANICAL COMPONENT ASSEMBLY (2) 5-5
MECHANICAL COMPONENT ASSEMBLY (3) 5-7
MECHANICAL COMPONENT ASSEMBLY (4) 5-9
FRONT PANEL ASSEMBLY 5-11
REAR JACK PANEL ASSEMBLY 5-13
CASING PARTS ASSEMBLY 5-15
CHASSIS FRAME ASSEMBLY 5-17
DRUM ASSEMBLY 5-19
PACKING PARTS ASSEMBLY 5-20

MECHANICAL REPLACEMENT PARTS LIST
CASSETTE COMPARTMENT ASSEMBLY

Ref.No.	Part No.	Part Name & Description	Pcs	Remarks
1	VXA5232	FRONT LOADING U.	1	
2	VMD1746	OPENER	1	
3	VXA5021	RIGHT SIDE PLATE (1) U.	1	
4	VDB1116	MAIN SHAFT RETAINER	1	
5	VML2544	UD PHOTO LEVER	1	
6	VMD1752	KICK GUIDE	1	
7	VMA8056	PHOTO ADJ PLATE	2	
8	VMB2325	V PHOTO LEVER SPRING	1	
9	VML2543	V PHOTO LEVER	1	
10	VDB1116	MAIN SHAFT RETAINER	1	
11	VMD1752	KICK GUIDE	1	
12	VXA5019	LEFT SIDE PLATE (1) U.	1	
13	VML2548	PANEL OPENER	1	
14	VXA4431	WORM BASE U.	1	
14-1	VXA4432	GEAR BASE (1) U.	1	
14-2	VDG0803	WORM WHEEL	1	
14-3	VDG1022	INTERMEDIATE GEAR 2	1	
14-4	VXP1299	WORM GEAR U.	1	
14-5	VEM0393	FRONT LOADING MOTOR U.	1	
14-6	VMA8440	GEAR BASE	1	
15	VMB2326	UD PHOTO LEVER SPRING	1	
16	VMD1747	CENTER GUIDE	1	
17	VMS4652	DETECTION LEVER SHAFT	1	
18	VMB2323	DETECTION LEVER SPRING	2	
19	VWJ0559	FLEXIBLE CABLE	1	
20	VMD1749	CABLE HOLDER B	1	
21	VMZ1801	INSULATION SHEET	1	
22	VXA4699	CASSETTE HOLDER (1) U.	1	
23	VMD1748	CASSETTE GUIDE	2	
24	VMS4629	PRESSURE ROLLER SHAFT	1	
25	VDP1389	PRESSURE ROLLER	6	
26	VML2148	PRESSURE LEVER A (R)	1	
27	VML2149	PRESSURE LEVER A (L)	1	
28	VMB2356	PRESSURE LEVER SPRING	2	
29	VMA8905	PRESSURE ROLLER STOPPER	1	
30	VXL2103	KICK DRIVE LEVER R U.	1	
31	VXL2104	KICK DRIVE LEVER L U.	1	
32	VML2545	KICK LEVER R	1	
33	VML2546	KICK LEVER L	1	
34	VMA8435	DETECTION LEVER BASE	1	
35	VML2542	DETECTION LEVER	2	
36	VMB2324	KICK LEVER SPRING	2	
37	VJF0300	BINDER	4	
38	VMA8434	CASSETTE IN SW ANGLE	2	
39	VMA8442	FRONT GUIDE ANGLE	1	
40	VMD1754	ANGLE GUIDE	2	
41	VDP1020	GUIDE ROLLER A	2	
42	VDP1021	GUIDE ROLLER B	2	
43	VDP1388	GUIDE ROLLER D	4	
44	VML2498	WIPER ARM R	1	
45	VML2499	WIPER ARM L	1	
46	VDG0800	WIPER GEAR	2	
47	VMB2327	WIPER CHARGE SPRING	2	
48	VMD1753	CHARGE SPRING COVER	2	
49	VMS4628	MAIN SHAFT	1	
50	VMS2549	BRAKE ARM CAM PIN	1	
51	VDG0802	INTERMEDIATE GEAR I	1	
52	VDG0801	MAIN SHAFT GEAR	2	
53	VDG0947	PANEL GEAR	1	
54	VMB2611	BLINDER PANEL SPRING	1	
55	VYF2063	BLINDER PANEL U.	1	
56	VMD1750	CABLE HOLDER A	1	
57	VML2633	PROTECT LEVER	1	
58	VMS3986	LIFT LEVER PIN SHAFT	2	
59	VMB2448	PROTECT LEVER SPRING	1	
60	VMX1811	METER SPACER	2	
61	VMD1883	CABLE HOLDER C	1	
62	VJR3	CLAMPER	1	
63	VMD1945	DRIVE GUIDE	1	
64	VEK7126	PHOTO TR R U.	1	
65	VEK7125	PHOTO TR L U.	1	

Ref.No.	Part No.	Part Name & Description	Pcs	Remarks
80	XQN2+A3FZ	SCREW	4	
81	XSN26+6	SCREW	6	
82	XTN2+8J	SCREW	2	
83	XTN26+4F	SCREW	4	
84	XTV26+4F	SCREW	6	
85	XTV3+6F	SCREW	17	
86	XTV26+4FFZ	SCREW	4	
87	XTV3+8F	SCREW	2	
88	XYN26+C4	SCREW	6	
89	XYN26+F4	SCREW	2	
90	XYN3+C4S	SCREW	4	
91	XSN26+4	SCREW	3	
92	XYN3+F8S	SCREW	4	
93	XUC25FP	E-RING	9	
94	XUC3FP	E-RING	10	
95	XUC4FP	E-RING	1	
96	XUC5FP	E-RING	2	
97	XWGV4D7G	WASHER	1	
98	XQN26+A6	SCREW	2	
99	XWGV5D9G	WASHER	1	
100	XWL2	WASHER	4	
101	XWG4	WASHER	1	
102	XWGV4Y7G	WASHER	2	
103	XWGV4D9G	WASHER	4	
E-1	VEP00E30B	CASSETTE DET SW P.C.B.	4	
E-2	VEP80654A	INTERMEDIATE B P.C.B.	1	
E-3	VEP80653A	INTERCONNECTION A P.C.B.	1	

CASSETTE COMPARTMENT ASSEMBLY

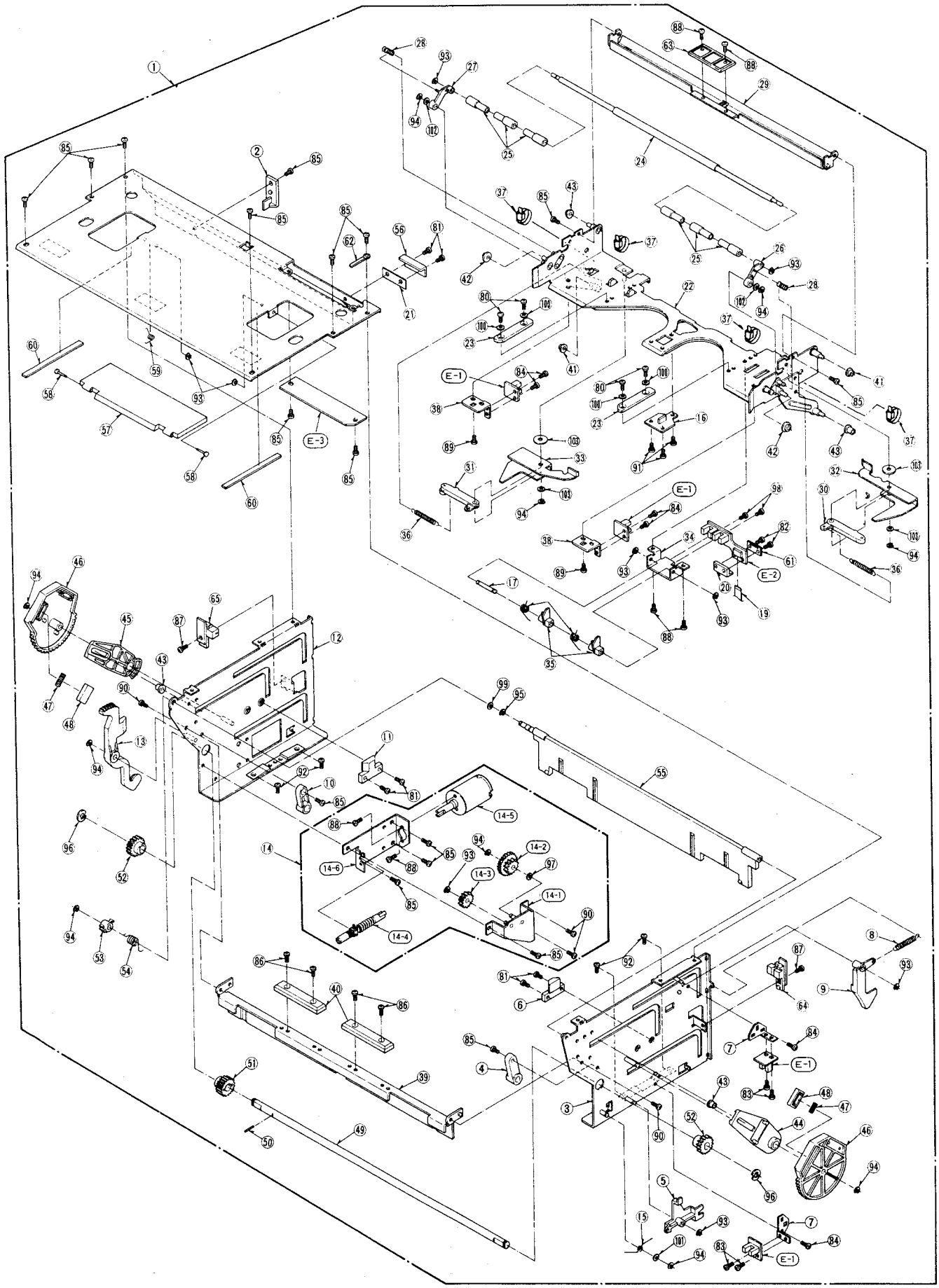

MECHANICAL COMPONENT ASSEMBLY (1)

Ref.No.	Part No.	Part Name & Description	Pcs	Remarks
1	VXA2271	UPPER FLANGE	2	
2	VXP0819	POST ROLLER	3	
3	VMS2800	LOWER FLANGE	1	
4	VMB1379	POST SPRING	2	
5	VED0158	A/C HEAD U	1	
5-1	VMX1441	ADJ. COLLAR	1	
5-2	VMB1843	ADJ. SPRING	1	
5-3	VXA4085	A/C HEAD MOUNT PLATE	1	
5-4	VMD1579	A/C HEAD BASE	1	
5-5	VBR0175	A/C HEAD	1	
5-6	VHD0797	HEX. SCREW	1	
6	VMX1161	LOWER FLANGE	2	
7	VXP0938	POST ROLLER	1	
8	VMS3703	UPPER FLANGE	1	
9	VMB1653	BEARING SPRING	1	
10	VMB2147	A/C HEAD SPRING	1	
11	VMA8463	TENSION P.C.B. BRACKET	1	
12	VMS3712	UPPER FLANGE	1	
13	VXA2272	LOWER FLANGE	1	
14	VXP1422	LOADING RING UNIT	1	
14-1	VMS3638	UPPER FLANGE	3	
14-2	VXP0821	POST ROLLER	3	
14-3	VMS2803	LOWER FLANGE	3	
14-4	VMB1377	POST SPRING	4	
14-5	VXL2106	PINCH ROLLER ARM U	1	
14-6	VMB2301	PINCH ARM REST SPRING	1	
14-7	VMS4617	UPPER FLANGE	1	
14-8	VXP1294	ROLLER	1	
14-9	VMS4620	LOWER FLANGE	1	
14-10	VXL2105	M LOADING ARM UNIT	1	
14-11	VMB2299	LOADING ARM RESET SPRING	1	
14-12	VXP1421	LOADING RING	1	
14-13	VXL2317	T. BUFFER ARM U	1	
14-14	VMB2607	T. BUFFER SPRING	1	
14-15	VHD0789	SCREW	4	
15	VMB2477	POST SPRING	1	
16	VDP1010	RING ROLLER	4	
17	VMX1297	RING ROLLER COLLAR	2	
18	VXR0215	RING ROLLER UNIT	1	
18-1	VDP1010	RING ROLLER	2	
18-2	VMX1995	RING ROLLER COLLAR B	1	
19	VMD1730	CABLE HOLDER	2	
20	VXA4407	WORM BASE	1	
21	VEM0397	WORM MOTOR U	1	
22	VDV0231	TIMING BELT	1	
23	VXP0940	CAPSTAN MOTOR UNIT	1	
24	VSC2066	CAPSTAN MOTOR COVER	1	
25	VXD0110	CAPSTAN HOUSING UNIT	1	
26	VEK3699	CAPSTAN STATOR P.C.B. U	1	
27	VEG1188KIT	DRUM UNIT	1	AJ-D350P
27	VEG1189KIT	DRUM UNIT	1	AJ-D350E
28	VXA4729	CLEANER UNIT	1	
28-1	VSJ0109	CLEANER SOLENOID	1	
28-2	VXP1326	CLEANER ROLLER UNIT	1	
29	VHD0798	SCREW	4	
30	VMX2314	TILT COLLAR	1	
31	VJR3	CLAMPER	3	
51	XNG4ES	NUT	1	
52	XVE26B12FP	HEX SCREW	2	
53	XTV26+6F	HEX SCREW	4	
54	XTV3+6F	SCREW	11	
55	XTV3+6FFZ	SCREW	1	
56	XTV3+8F	SCREW	6	
57	XYN2+C10S	SCREW	3	
58	XYN2+C6V	SCREW	3	
59	XYN26+C7V	SCREW	3	
60	XVE26B6FP	HEX SCREW	3	
61	XYN3+F18	SCREW	1	
62	XYN3+F6	SCREW	4	
63	XYNV26+K4S	SCREW	2	
64	XYNV3+K10S	SCREW	3	

Ref.No.	Part No.	Part Name & Description	Pcs	Remarks
65	XYN4+C14S	SCREW	3	
66	XWGV2D6G	WASHER	2	
67	XUC25FP	E-RING	3	
68	XUC3FP	E-RING	3	
69	XWE4	WASHER	3	
70	XWG26	WASHER	4	
71	XWE4	WASHER	1	
72	XWGV3D6G	WASHER	4	
73	XWGV3Y6G	WASHER	2	
74	XWGV4D7G	WASHER	2	
75	XWGV4F9G	WASHER	1	
76	XWGV4Y7G	WASHER	4	
77	XYN2+C3	SCREW	1	
78	XWA26B	WASHER	2	
79	XXE2C3FP	HEX SCREW	2	
E-1	VEP80306B	SERVO CONTROL P.C.BOARD	1	
E-2	VEP80644A	REEL I/F P.C.BOARD	1	
E-3	VEP80645A	REEL I/F P.C.BOARD	1	

MECHANICAL COMPONENT ASSEMBLY (1)

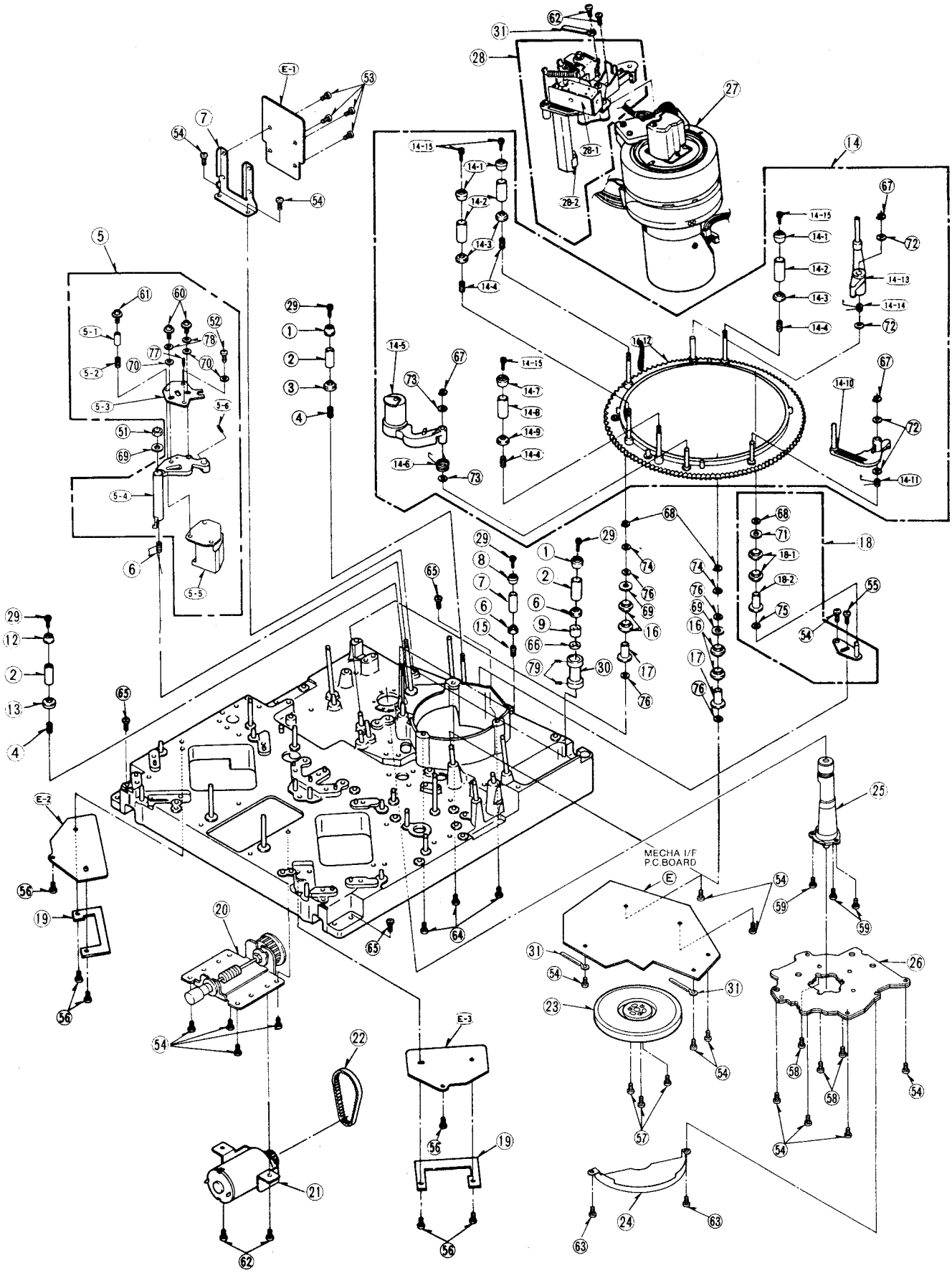

MECHANICAL COMPONENT ASSEMBLY (2)

Ref.No.	Part No.	Part Name & Description	Pcs	Remarks
1	VSJ0100	BRAKE SOLENOID	1	<R23>
2	VMA8410	S SOLENOID BRACKET	1	
3	VMX2006	WASHER	2	
4	VXR0230	REEL TABLE	2	<R10,R11>
5	VXL2423	SUPPLY BRAKE U.	1	
5-1	VMB2688	BRAKE SPRING (2)	2	
5-2	VXL2119	BRAKE SHOE U.	2	<R21,R22>
5-3	VMB2746	BRAKE SPRING (1)	2	
6	VMA8416	S BRAKE INTERLOCKING ANGLE	1	
7	VMX0803	CASSETTE SUPPORTER	2	
8	VMB1377	POST SPRING	2	
9	VBK0058	MR SENSOR	2	
10	VMA8415	MR SPACER	2	
11	VXA5310	S REEL BASE (S) U.	1	
12	VMD1707	DET BIT CAP (T)	2	
13	VXJ0096	DET BIT PIN U.	2	
14	VMB2280	DET BIT SPRING	2	
15	VMD1705	DET BIT HOLDER (T)	2	
16	VJF0620	CLAMPER	2	
17	VMA8375	PHOTO DET BASE	1	
18	VXL2424	TAKE UP BRAKE U.	1	
18-1	VMB2688	BRAKE SPRING	2	
18-2	VXL2119	BRAKE SHOE U.	1	
18-3	VMB2746	BRAKE SPRING	1	
19	VMA8417	T BRAKE INTERLOCKING ANGLE	1	
20	VSJ0100	BRAKE SOLENOID	1	<R24>
21	VMA8409	T SOLENOID BRACKET	1	
22	VXA5311	T REEL BASE (S) U.	1	
23	VMS4633	RAIL B	2	
24	VMS4632	RAIL A	2	
25	VMA8449	RAIL HOLDER A	4	
26	VMA8450	RAIL HOLDER B	4	
27	VMB2311	LC STOPPER SPRING (R)	1	
28	VXA4414	LC STOPPER (R) UNIT	1	
29	VMS3983	SELECT GUIDE SHAFT	2	
30	VMA8420	LC STOPPER HOLDER	2	
31	VXA4416	LC STOPPER (L) U	1	
32	VMB2312	LC STOPPER SPRING (L)	1	
33	VXL2099	LC STOPPER DRIVE LEVER	1	
34	VXA4390	LC STOPPER BASE	1	
35	VMA8419	SOLENOID HOLDER	1	
36	VSJ0102	LC STOPPER SOLENOID	1	<R36>
37	VDG0757	REEL BASE DRIVE GEAR	2	
38	VMB2310	CHARGE SPRING	2	
39	VDG0756	REEL BASE DRIVE WHEEL GEAR	2	
40	VMD1703	DETECTION BIT BASE	1	
41	VMD1704	LIGHT HOUSE CAP	1	
42	VES0628	DETECTION BIT U.	1	
71	XQN2+AJ5	SCREW	6	
72	XTV26+5F	SCREW	4	
73	XTV26+8G	SCREW	4	
74	XTV3+6F	SCREW	10	
75	XTV3+8F	SCREW	5	
76	XYN26+C4	SCREW	4	
77	XYN26+F4FZ	SCREW	2	
78	XYN26+C5	SCREW	8	
79	XYNV26+K10	SCREW	4	
80	XYNV26+K5	SCREW	4	
81	XXEV3W4FPS	HEX SCREW	2	
82	XUC25FP	E-RING	6	
83	XUC2FP	E-RING	3	
84	XWG4	WASHER	2	
85	XWGV3D6G	WASHER	6	
86	XWGV3Y6G	WASHER	2	
87	XWGV3Y8G	WASHER	4	
88	XWGV4D9G	WASHER	4	
89	XYN3+C6S	SCREW	4	
E-4	VEP80641A	SENSOR P.C.BOARD	2	

Ref.No.	Part No.	Part Name & Description	Pcs	Remarks
E-5	VEP80652A	LED P.C.BOARD	2	
E-6	VEP80640A	PHOTO P.C.BOARD	1	
E-7	VEP00P03D	LED SENSOR	1	
E-8	VEP80655A	DETECT BIT P.C.BOARD (L)	1	
E-9	VEP80642A	DETECT BIT P.C.BOARD (R)	1	

MECHANICAL COMPONENT ASSEMBLY (2)

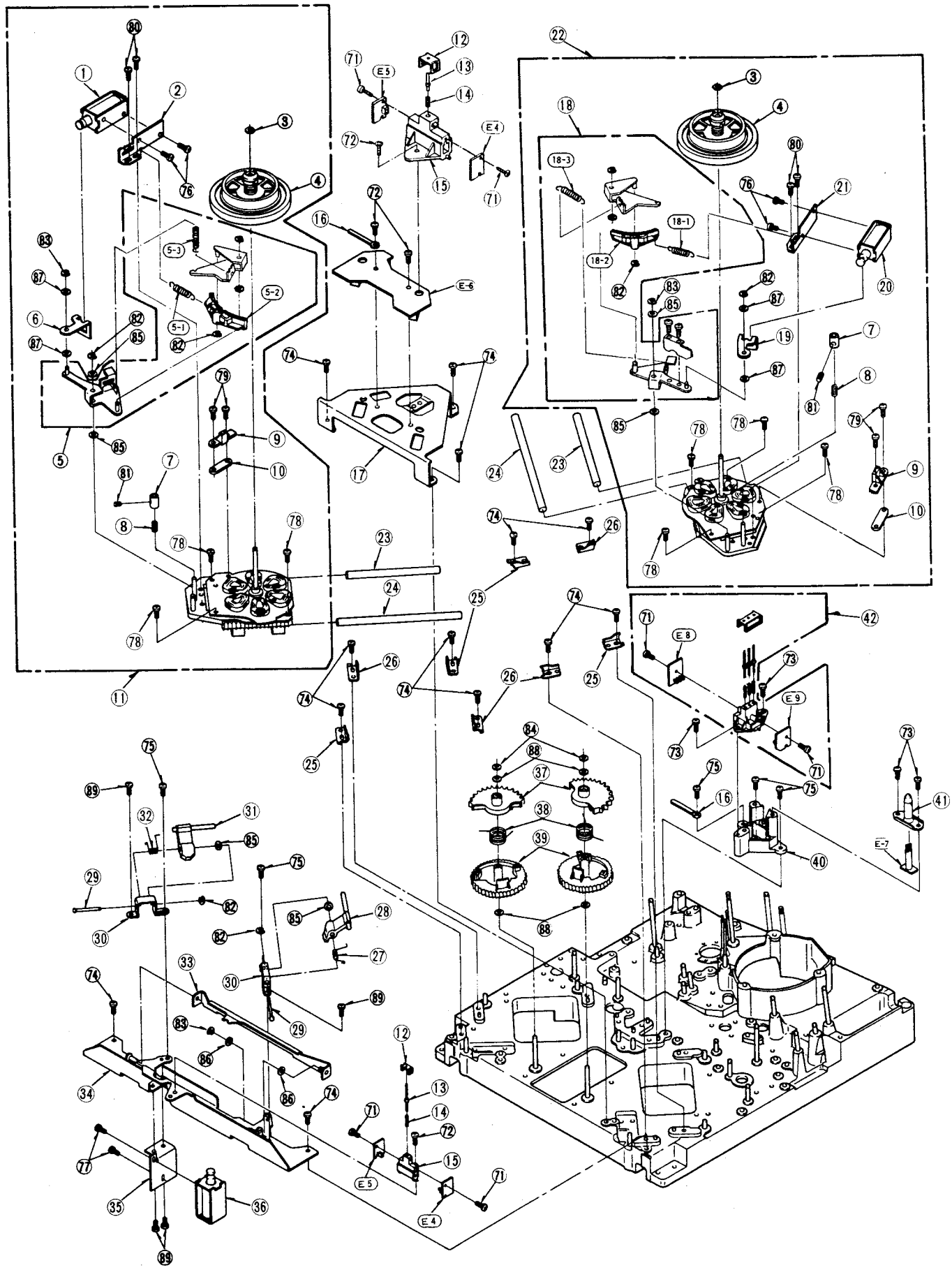

MECHANICAL COMPONENT ASSEMBLY (3)

Ref.No.	Part No.	Part Name & Description	Pcs	Remarks
1	VSJ0101	PINCH SOLENOID	1	
2	VMA8378	PINCH SOLENOID BASE	1	
3	VMA8464	PINCH LEVER ADJ. PLATE	1	
4	VXL2100	PINCH PRESS LEVER U	1	
4-1	VML1674	PINCH DRIVE ARM	1	
4-2	VMB2295	PINCH LEVEL RESET SPRING	1	
4-3	VMB1760	PINCH SPRING	1	
4-4	VMX0800	PINCH COLLAR (3)	1	
4-5	VML1675	PINCH LEVER	1	
4-6	VMX0799	PINCH COLLAR (2)	1	
5	VXA4401	MAIN LEVER U	1	
6	VMA8446	SUB LOADING BRACKET	1	
7	VMA8447	SUB UNLOADING SENSOR ANGLE	1	
8	VMX1994	PINCH SPACER	1	
9	VML2534	UNLOADING DETECT LEVER	1	
10	VMB2303	UNLOADING RESET SPRING	1	
11	VMA8448	LOADING DETECT BRACKET	1	
12	VMB1378	POST SPRING	1	
13	VXA5334	P3 UPPER FLANGE	1	
14	VXP1429	POST ROLLER	1	
15	VMS4619	LOWER FLANGE	1	
16	VMB1376	POST SPRING	1	
17	VMX0794	BEARING COVER	2	
18	VXL2111	ARM U	1	
18-1	VXL2113	ADJUST ARM U	1	
18-2	VXL2112	ARM (1) U	1	
18-3	VXA2310	MAGNET U	1	
18-4	VMS3662	ARM SHAFT	1	
19	VXA5266	TENSION HOUSING U	1	
19-1	VXA4396	TENSION BASE U	1	
19-2	VMB2306	CHARGE SPRING	1	
19-3	VXL2114	DRIVE ARM U	1	
19-4	VMB2293	ARM RESET SPRING	1	
19-5	VMX1981	COLLAR	1	
19-6	VXP1486	TENSION HOUSING	1	
19-7	VXA4395	TENSION ADJ. PLATE U	1	
20	VML2532	UNLOADING DETECT LEVER	1	
21	VMB2296	UNLOADING DETECT SPRING	1	
22	VMA8465	UNLOADING DETECT BRACKET	1	
23	VEK6509	MAGNET	1	
24	VMA8444	SENSOR BRACKET	1	
25	VMS3638	UPPER FLANGE	2	
26	VMX1939	COLLAR A	4	
27	VXP1293	ROLLER	2	
28	VMS2803	LOWER FLANGE	2	
29	VMB1376	POST SPRING	2	
30	VHD0275	SCREW	4	
31	VES0625	POSITION DETECT BIT U	2	
32	VXA5256	T BASE (A) 1 U	1	
33	VMA8429	SLANT ADJ. PLATE	1	
34	VMA8428	SLANT ADJ. BASE	1	
35	VHD0798	HEX. SCREW	2	
36	VXA5254	S BASE (A) 1 U	1	
37	VBS0040	FULL ERASE HEAD	1	
38	VXL2115	T DRAW-OUT ARM U	1	
38-1	VXA4397	SLANT POST U	1	
38-2	VML2524	T DRAW-OUT ARM (1) U	1	
38-3	VMB2304	SLANT RESET SPRING	1	
39	VMB2302	CHARGE SPRING	1	
40	VXA4398	T DRAW-OUT ARM (1) U	1	
40-1	VMB2307	T ARM RESET SPRING	1	
41	VMX1953	COLLAR	2	
42	VXL2364	ARM U	1	
42-1	VMS5497	UPPER FLANGE	1	
42-2	VXP0821	POST ROLLER	1	
42-3	VMS2803	LOWER FLANGE	1	
42-4	VMB1376	POST SPRING	1	
42-5	VXL2365	ARM (1) U	1	
43	VMB2297	CHARGE SPRING	1	
44	VXA4393	DRAW-OUT DRIVE PLATE U	1	
44-1	VMB2294	ARM RESET SPRING	1	
45	VDP1071	ROLLER	3	
46	VJR3	CLAMPER	1	
47	VMD1911	OPENER	1	

Ref.No.	Part No.	Part Name & Description	Pcs	Remarks
48	VMA8418	OPENER PLATE	1	
49	VMC0217	WASHER	1	
51	XXEV26W3FP	SCREW	1	
52	XXE2C25FP	SCREW	1	
53	XXE2D2FP	SCREW	1	
54	XXE2D3FP	SCREW	1	
55	XQN2+A3FZ	SCREW	2	
56	XQN2+AJ5	SCREW	4	
57	XVE2B6FP	SCREW	2	
58	XTV3+8FFZ	SCREW	3	
59	XYNV26+K5	SCREW	1	
60	XTV26+5F	SCREW	8	
61	XYN3+F8FZS	SCREW	2	
62	XTV3+6F	SCREW	2	
63	XTV3+6FFZ	SCREW	10	
64	XTV3+8F	SCREW	4	
65	XYN2+C5	SCREW	3	
66	XYN3+C5	SCREW	3	
67	XYN3+F5FZ	SCREW	1	
68	XXE26A4FP	HEX SCREW	1	
69	XSB3+4FZ	SCREW	1	
70	XUC2FP	E-RING	1	
71	XYN3+C5S	SCREW	2	
72	XUC25FP	E-RING	6	
73	XWGV3D6G	WASHER	2	
74	XWGV3D8G	WASHER	6	
75	XWGV4F7G	WASHER	5	
76	XWGV3F6G	WASHER	2	
77	XUC3FP	E-RING	4	
78	XWGV4D7G	WASHER	3	
79	XWGV5D9G	WASHER	1	
80	XWG4	WASHER	1	
81	XWG3	WASHER	1	
82	XWGV4Y7G	WASHER	1	
83	XUC8FP	E-RING	1	
84	XWGV10Y15G	WASHER	2	
85	XWGV11D16G	WASHER	1	
86	XXE26A8FP	HEX WASHER	1	
E-10	VEP80661A	POSITION PHOTO TR P.C.BOARD	2	
E-11	VEP80661B	POSITION LED P.C.BOARD	2	
E-12	VEP80458B	SUB LOADING PHOTO P.C.BOARD	1	
E-13	VEP00E25E	SUB LOADING PHOTO P.C.BOARD	1	
E-14	VEP00E04D	LOADING PHOTO P.C.BOARD	1	
E-15	VEP00E25D	UNLOADING PHOTO P.C.BOARD	1	

MECHANICAL COMPONENT ASSEMBLY (3)

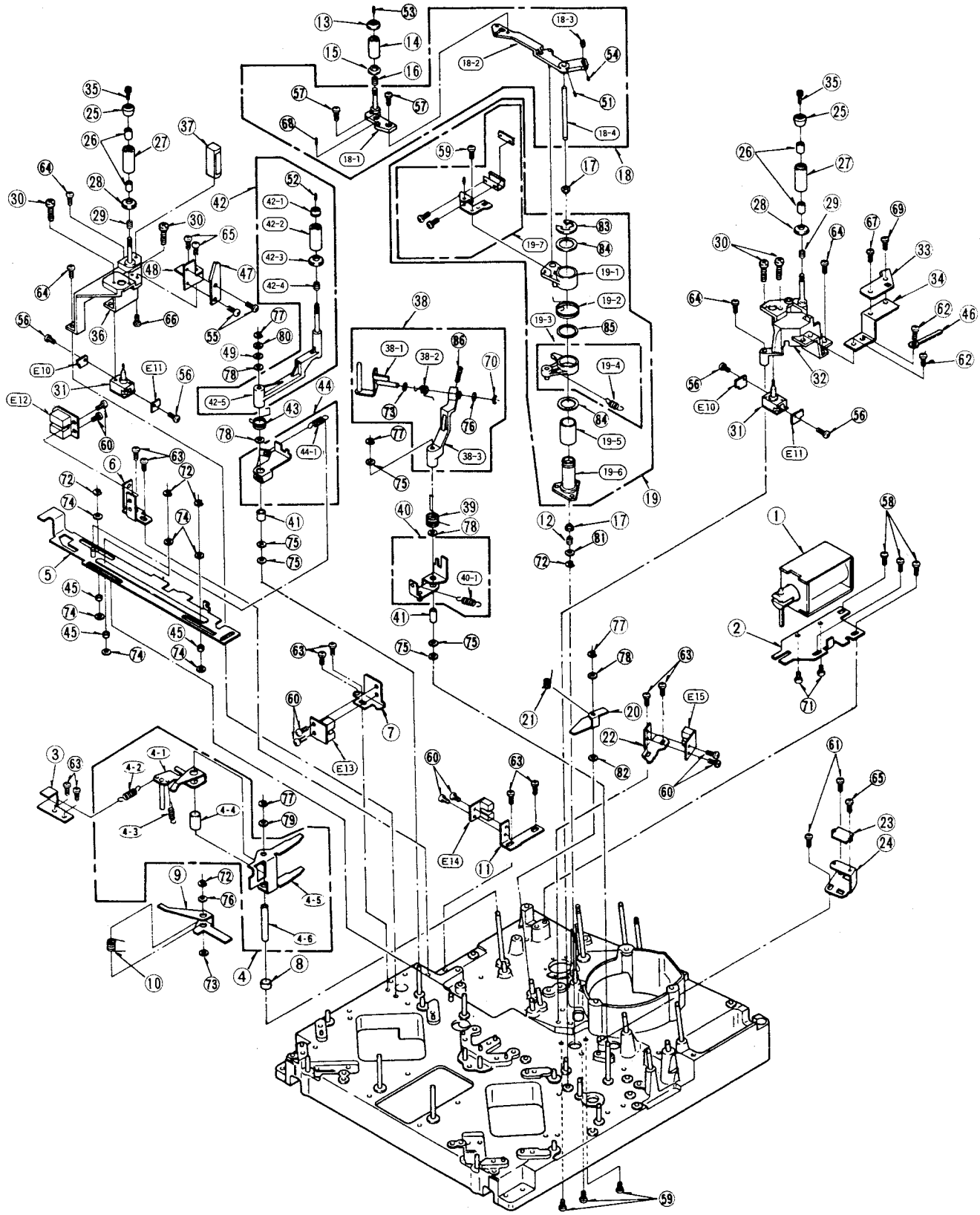

MECHANICAL COMPONENT ASSEMBLY (4)

Ref.No.	Part No.	Part Name & Description	Pcs	Remarks
1	VXA5142	A/C CLEANER 3P U	1	
1-1	VXL2321	A/C CLEANER ARM U	1	
1-2	VMX2198	CLEANER CAP	3	
1-3	VMB2609	A/C CLEANER SPRING	1	
1-4	VMF0367	CLEANER PAD	2	
2	VMA8906	FG SENSOR BASE	1	
3	VDG0216	INTERMEDIATE GEAR	1	
4	VDG0215	RING DRIVE GEAR	1	
5	VMX1405	DRIVE GEAR SLEEVE A	1	
6	VMB1343	DRIVE GEAR SPRING	1	
7	VXA4402	LOADING MOTOR HOLDER	1	
8	VEM0323	LOADING MOTOR U	1	
9	VDB1254	THRUST BEARING	1	
10	VXP1056	WORM GEAR U	1	
11	VDB0899	BEARING	1	
12	VDV0156	LOADING MOTOR BELT	1	
13	VMA8379	LOADING MOTOR BRACKET	1	
14	VMD1729	PINCH GUIDE	1	
15	VMA8426	PINCH GUIDE BRACKET A	1	
16	VMA8413	PINCH GUIDE BRACKET B	1	
17	VML2518	DRIVE ANGLE	1	
18	VMB2298	SLANT CHANGE SPRING	1	
19	VXA4405	DRIVE PLATE U	1	
20	VDG0761	INTERMEDIATE GEAR	1	
21	VDG0760	CAM GEAR	1	
22	VXA4404	SLANT DRIVE ANGLE	1	
23	VMX1979	SLANT DRIVE COLLAR	1	
24	VXP1289	DRIVE GEAR U	1	
25	VDG0828	DECREASE GEAR	1	
26	VMA8374	M PHOTO SENSOR ANGLE	1	
27	VXP1288	SUB WORM GEAR U	1	
28	VMA8526	SUB LOADING MOTOR BRACKET	1	
29	VEM0395	SUB LOADING MOTOR U	1	
30	VJR3	CLAMPER	1	
50	XTV3+6F	SCREW	8	
51	XTV3+6FFZ	SCREW	1	
52	XTV26+6F	SCREW	2	
53	XTV3+10F	SCREW	2	
54	XYN2+C4	SCREW	2	
55	XTV26+5F	SCREW	2	
56	XTV3+8F	SCREW	1	
57	XSB3+6S	SCREW	2	
58	XYN3+C4S	SCREW	2	
59	XUC25FP	E-RING	5	
61	XWGV3D6G	WASHER	5	
63	XWGV3Y6G	WASHER	2	
64	XUC3FP	E-RING	4	
65	XWGV4D7G	WASHER	6	
66	XWG4FC	WASHER	1	
67	XWE4	WASHER	1	
68	XWGV4Y7G	WASHER	1	
E-16	VEP80639A	PHOTO P.C.BOARD	1	
E-17	VEP00E28D	TR SENSOR P.C.BOARD	1	
E-18	VEP00E04D	LOADING PHOTO P.C.BOARD	1	

MECHANICAL COMPONENT ASSEMBLY (4)

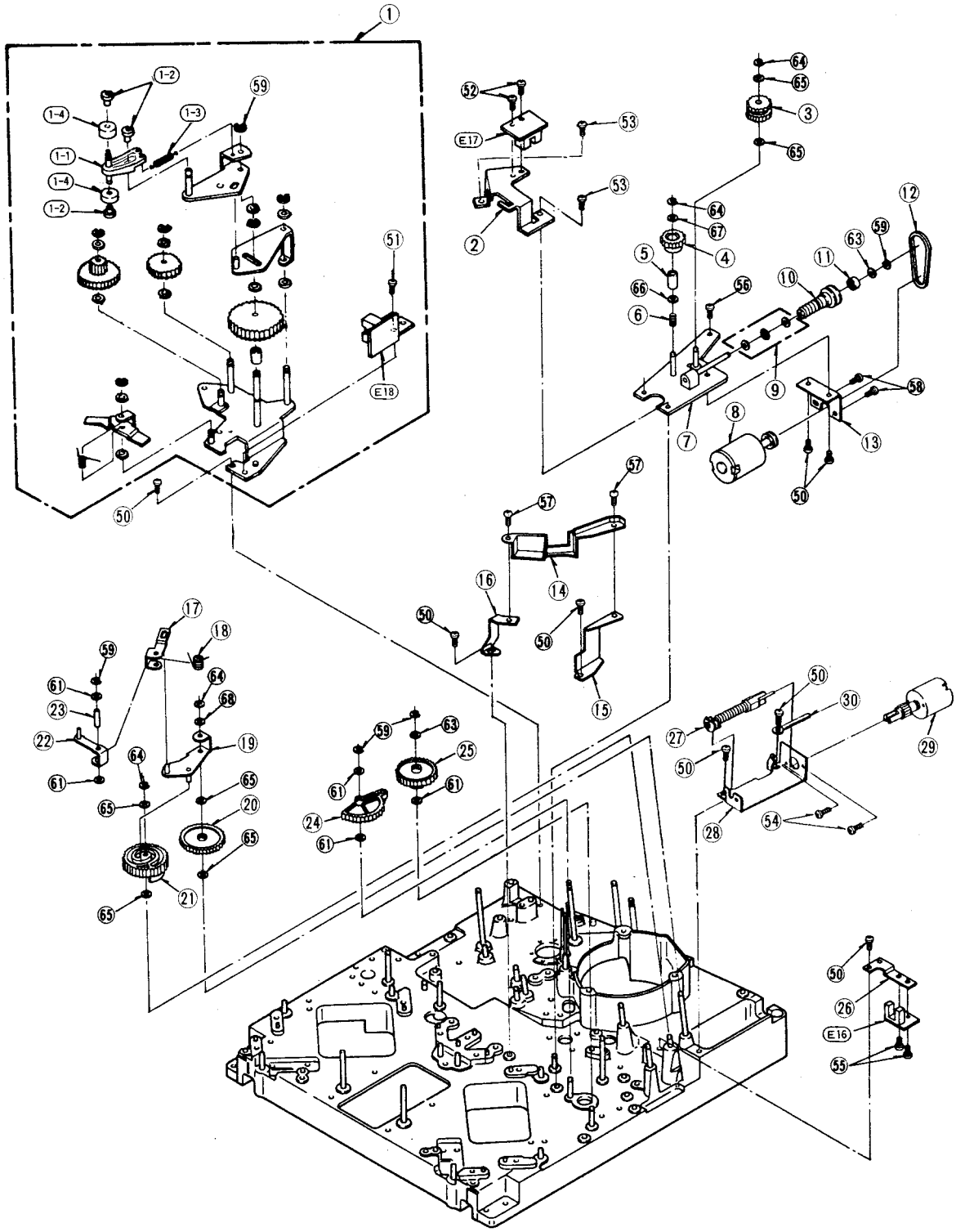

FRONT PANEL ASSEMBLY

Ref.No.	Part No.	Part Name & Description	Pcs	Remarks
1	VMP3070	FRONT PANEL ANGLE (U)	1	
2	VMP3074	FRONT PANEL ANGLE (L)	1	
3	VMZ1769	POWER SWITCH COVER	1	
4	VSW0043	POWER SWITCH	1	
5	VMP3071	POWER SWITCH BRACKET	1	
6	VMP3075	FRONT PANEL ANGLE (R)	1	
7	VYP3899	FRONT PANEL (U1) UNIT	1	
7-1	VGQ2423	CASSETTE GUARD	4	
8	VYF1685	FRONT PANEL COVER UNIT	1	
8-1	VKA0119	RUBBER FOOT	2	
8-2	VKA0120	STAND	2	
8-3	VJF1065	CLAMPER	1	
9	VMP2937	DISPLAY HOLDER	2	
10	VMZ1783	DISPLAY BARRIER	1	
11	VGQ2425	P.C.B. HOLDER A	1	
12	VGU5330	F RUBBER BUTTON B	1	
13	VGU5331	MODE SW RUBBER BUTTON	1	
14	VXA4451	PANEL HOLDER (L)	1	
15	VMC0707	SPRING PLATE	2	
16	VHD0662	FRONT PANEL SCREW	2	
17	VGQ2471	LOCK RELEASE GUIDE	1	
18	VGU5488	LOCK RELEASE BUTTON (L)	1	
19	VMZ1784	SWITCH BOARD BARRIER	1	
20	VGQ2426	P.C.B. HOLDER B	1	
21	VGU5329	F RUBBER BUTTON A	1	
22	VXA4421	PANEL HOLDER (R)	1	
23	VGQ2472	LOCK RELEASE GUIDE (R)	1	
24	VGU5550	LOCK RELEASE BUTTON (R)	1	
25	VMP3072	HP BRACKET	1	
26	VMP2939	ROTARY ENCODER BRACKET	1	
27	VSQ0775	ROTARY ENCODER	1	
28	VSR0095	SEARCH DIAL	1	
29	VGU5332	ADJUST KNOB	1	
30	VGU5333	ADJUST RUBBER COVER	1	
31	VGU5334	LEVEL VR KNOB	1	
32	VGU5780	SEARCH DIAL COVER	1	
33	VXU1087	SEARCH DIAL BUSHING	1	
34	VYP5656	FRONT PANEL	1	
35	VEQ1273	DISPLAY	1	
36	VMZ1925	DISPLAY BARRIER	2	
37	VMT0375	DISPLAY SPACER	1	
38	VHN0059	NYLON NUT	5	
39	VHN0164	NYLON NUT	4	
40	VMT0536	DISPLAY CUSHION A	1	
41	VMT0537	DISPLAY CUSHION B	2	
42	VMT0538	DISPLAY CUSHION C	1	
43	VHD0277	SCREW	3	
44	VMT0376	FUNCTION BUTTON SPACER	2	
50	XTV3+10F	SCREW	4	
51	XTV3+10G	SCREW	31	
52	XYN3+C6S	SCREW	2	
53	XTV4+6F	SCREW	2	
54	XTN4+10G	SCREW	20	
55	XYN3+F6S	SCREW	4	
56	XSB26+4FZ	SCREW	3	
57	XSN3+6	SCREW	2	
59	XWV9	WASHER	1	
60	XTB4+12GFZ	SCREW	4	
61	XTV4+12J	SCREW	5	
62	XYE3+EJ10FR	SCREW	1	
63	XTV4+20G	SCREW	4	

Ref.No.	Part No.	Part Name & Description	Pcs	Remarks

FRONT PANEL ASSEMBLY

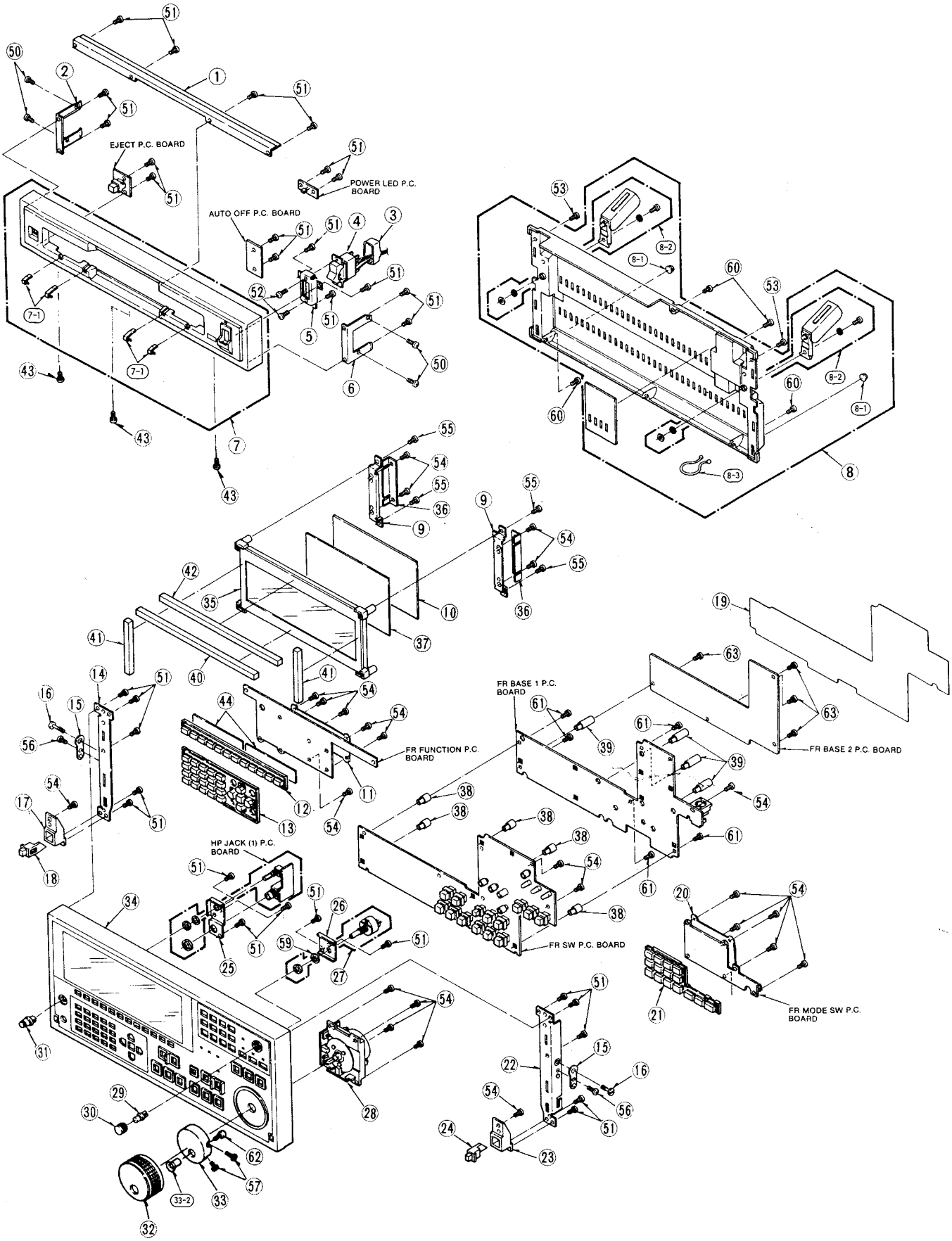

REAR JACK PANEL ASSEMBLY

Ref.No.	Part No.	Part Name & Description	Pcs	Remarks
1	VHD0178	50P CONNECTOR BOSS	2	
2	VMP3086	50P CONNECTOR BRACKET	1	
3	VJS1440	BNC CONNECTOR	11	
4	VMZ0631	SHIELD BUSHING	11	
5	VMP3091	FAN MOTOR BRACKET	1	
6	VGH2706	DECORATIVE JACK PANEL	1	AJ-D350P
6	VGH2655	DECORATIVE JACK PANEL	1	AJ-D350E
7	VJH0776	JACK PANEL	1	
8	VRF0063	FAN MOTOR	1	
9	VJS2665	XLR CONNECTOR (FEMALE)	8	
10	VJP2666	XLR CONNECTOR (MALE)	10	
11	VMZ0631	SHIELD WASHER	11	
12	VMP3092	FAN BRACKET	1	
13	VGM0776	OUTER P/S CASE (R)	1	
14	VGM0777	OUTER P/S CASE (L)	1	
15	VMP3094	INNER P/S CASE	1	
16	VRF0062	FAN MOTOR	1	
17	VGF0388	FAN MOTOR GUARD	1	
18	VMP3090	AC SOCKET BRACKET	1	
19	VJH0082	GND TERMINAL	1	
20	VGH2656	DECORATIVE P/S PANEL	1	
21	VJP0083	AC SOCKET	1	
22	VSW0042	VOLTAGE SELECTOR	1	
23	VJF0938	EDGE HOLDER	1	
24	VJF0004	WIRE SADDLE	2	
25	VMP3089	FILTER BOARD BRACKET	1	
26	VMZ1252	SHIELD COVER	1	
27	VMZ1791	FILTER BARRIER	1	
28	VMZ1795	HEAT SINK BARRIER	1	
29	VGF0388	FAN MOTOR GUARD	2	
30	VGF0291	50P CONNECTOR COVER	1	
31	VMP3579	GP-IB CONNECTOR MOUNT PLATE	1	
32	VMX1558	WASHER	2	
33	VJS3263	GP-IB CONNECTOR	1	
34	VHD0731	MOUNT BOSS	2	
35	VSQ0819	FERRITE CORE	1	
36	VXY0876	SHIELD PLATE	1	
37	VJF1099	HOLDER CAP	1	
38	VSF0098	FUSE	1	AJ-D350P
38	XBA2C63TB0	FUSE	1	AJ-D350E
39	VQL5597	COVER	1	
40	VMZ1443	INSULATION SHEET	1	
41	VMZ2324	EDGE BARRIER	1	
50	XWA3B	WASHER	2	
51	XNG3ES	NUT	2	
52	XSN4+35FCS	SCREW	4	
53	XSN26+6FC	SCREW	36	
54	XSN2+6FZ	SCREW	2	
55	XWA4B	WASHER	4	
56	XWG4	WASHER	4	
57	XNG4ES	NUT	4	
58	XTV3+6F	SCREW	20	
59	XSS3+6FZS	SCREW	9	
60	XSB3+6FZ	SCREW	4	
61	XSN4+35FCS	SCREW	4	
62	VGU2085	KNOB	2	
63	VMX0754	SPACER	4	
64	XTS3+6F	SCREW	4	
65	XSB4+8FCS	SCREW	2	
66	XYN4+F8S	SCREW	5	
67	XYE3+EF6	SCREW	12	
68	XTB3+6FFZ	SCREW	8	
69	VXQ0102	SCREW	12	

Ref.No.	Part No.	Part Name & Description	Pcs	Remarks

REAR JACK PANEL ASSEMBLY

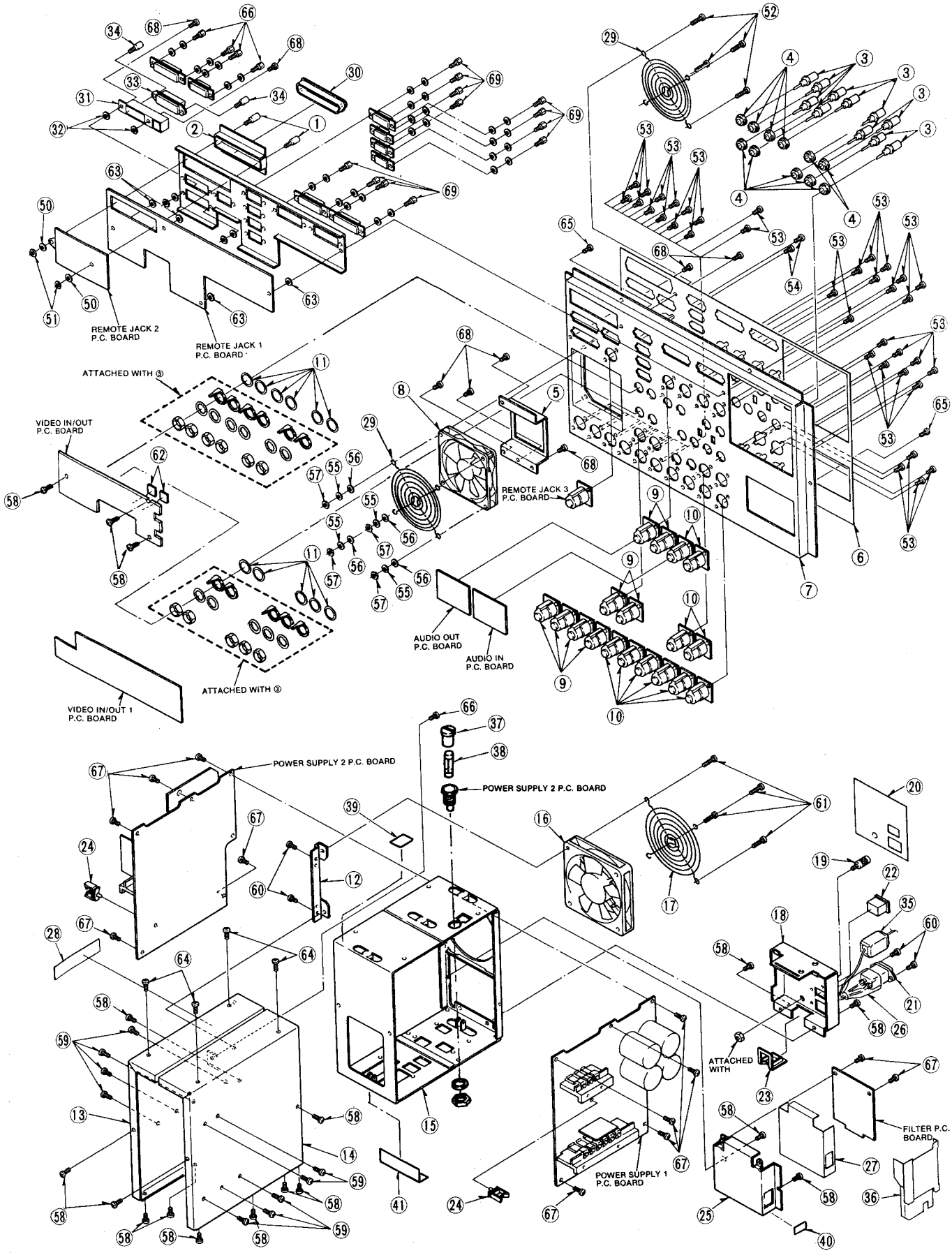

CASING PARTS ASSEMBLY

Ref.No.	Part No.	Part Name & Description	Pcs	Remarks
1	VHD0153	RAIL SCREW	4	
2	VGM0771	SIDE PANEL (L)	1	
3	VMP4082	TOP COVER ANGLE (A)	1	
4	VYH0126	HUNDLE	4	
5	VMP3044	RACK BRACKET	2	
6	VYP5343	TOP COVER (R)	1	
7	VGM0769	TOP COVER (M)	1	
8	VGM0768	TOP COVER (F)	1	
9	VHD0775	TOP COVER (F) SCREW	2	
10	VMX0835	TOP COVER (F) SPACER	2	
11	VMP3033	S P.C.B. HOLDER A	1	
12	VMT0384	S P.C.B. HOLDER CUSHION	2	
13	VMP4101	TOP COVER ANGLE (B)	1	
14	VMP3040	POWER UNIT ANGLE	1	
15	VGM0772	SIDE PANEL (R)	1	
16	VGM0773	BOTTOM PLATE (F)	1	
17	VGM0774	BOTTOM PLATE (R)	1	
18	VGM0775	BOTTOM PLATE (R) COVER	1	
19	VMP3532	VOLTAGE SELECTOR COVER	1	
20	VMP3531	VOLTAGE SELECTOR GUARD	1	
21	VMS4893	SPACER	2	
22	VJF0446	GUARD EDGE SPACER	1	
23	VMP3967	TOP COVER PLATE (A)	1	
24	VMX1558	WASHER	1	
25	VMP3407	S P.C.B. HOLDER B	1	
26	VML2895	POWER CABLE HOOK	1	
27	VMP4236	POWER CABLE HOOK ANGLE	2	
28	VMT0509	CUSHION	1	AJ-D350E ONLY
29	VMT0492	CUSHION	1	AJ-D350E ONLY
30	VMT0494	CUSHION	1	AJ-D350E ONLY
31	VMT0493	CUSHION	6	AJ-D350E ONLY
32	VMT0382	TOP PANEL CUSHION	1	
33	VQL6440	LABEL	1	AJ-D350E
33	VQL6441	LABEL	1	AJ-D350P
34	VMX1558	WASHER	2	AJ-D350E ONLY
50	XSB4+8FCS	SCREW	14	
51	XTV3+6F	SCREW	16	
52	XSB4+16FCS	SCREW	16	
53	XTV4+6F	SCREW	16	
54	XTB3+6F	SCREW	14	
55	XYN3+F6FZ	SCREW	4	
56	XTV3+6FFZ	SCREW	1	
57	XWG3	WASHER	2	
58	XYN3+F8	SCREW	1	

Ref.No.	Part No.	Part Name & Description	Pcs	Remarks

CASING PARTS ASSEMBLY

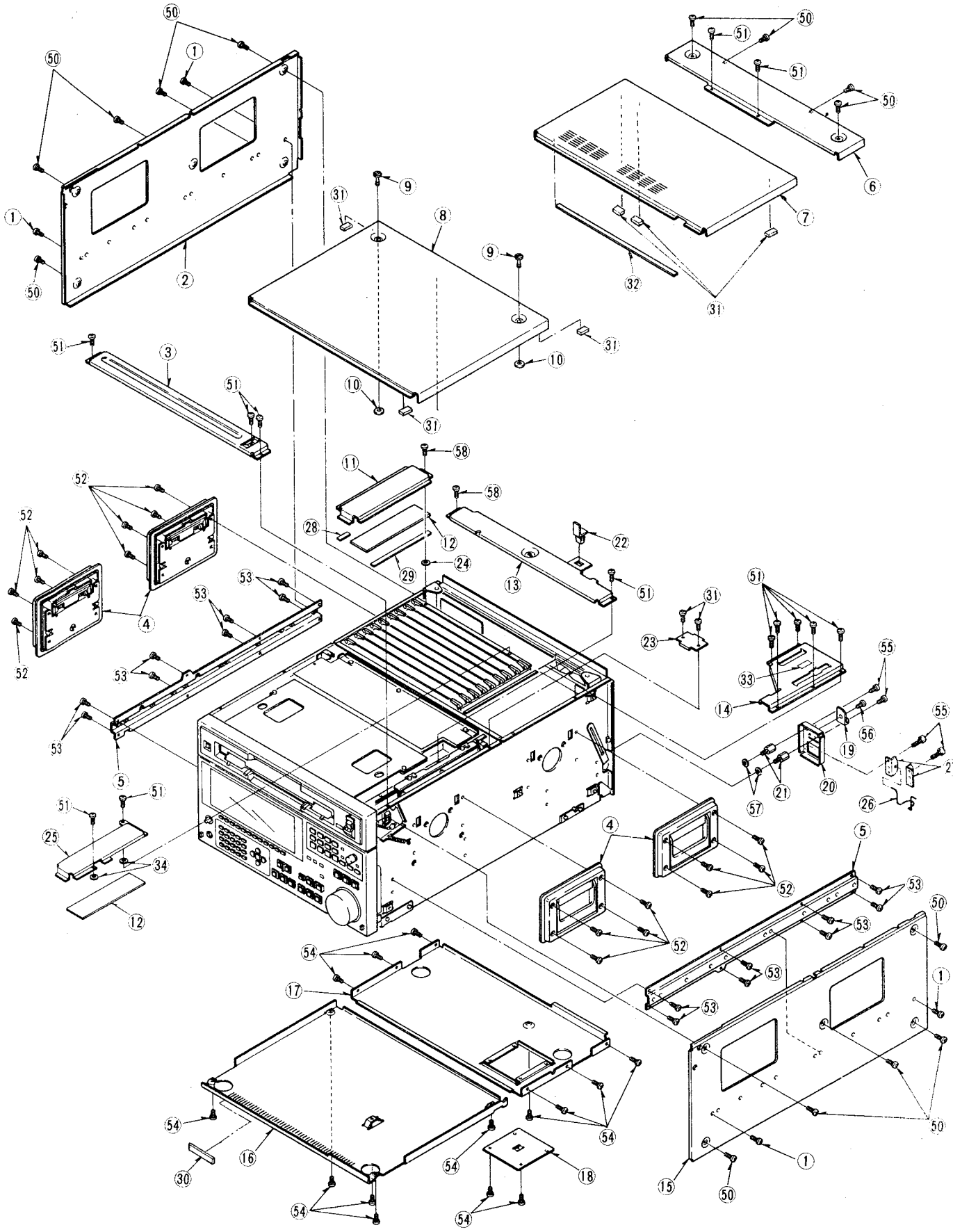

CHASSIS FRAME ASSEMBLY

Ref.No.	Part No.	Part Name & Description	Pcs	Remarks
1	VMP3014	REAR FRAME	1	
2	VMP3025	SP BOARD ANGLE	2	
3	VMP3142	LP BOARD ANGLE	1	
4	VGQ2413	SP BOARD GUIDE RAIL	2	
5	VMP3019	SP BOARD FRAME	1	
6	VGQ2412	LP BOARD GUIDE RAIL (R)	2	
7	VMP3041	POWER UNIT RAIL BASE	1	
8	VXA4450	CENTER FRAME (1) UNIT	1	
9	VJF0938	EDGE HOLDER	3	
10	VHD0325	SCREW	6	
11	VMP3078	FRONT LIFT BRACKET (L)	1	
12	VMB2317	SPRING	2	
13	VMP3045	TOP PANEL BRACKET (F)	2	
14	VMP3042	ROTARY STAY	1	
15	VMP3046	TOP PANEL BRACKET (R)	2	
16	VXA4422	JACK TURN BRACKET UNIT	1	
17	VJF0446	GUARD EDGE SPACER	1	
18	VHN0171	RIVET	2	
19	VMP3035	REC AMP P.C.B. ANGLE	1	
20	VYQ0689	ROTARY BRACKET (L)	1	
21	VMP4187	SIDE FRAME (L)	1	
22	VMP3080	LOCKING HOOK (L)	2	
23	VMP3031	CARD EDGE ANGLE	2	
24	VMP3685	L P.C.B. HOLDER	1	
25	VMT0385	L P.C.B. HOLDER CUSHION	2	
26	VJF0118	P.C.B. GUIDE RAIL	2	
27	VGQ2411	LP BOARD GUIDE RAIL (L)	2	
28	VXA4423	BOTTOM CHASSIS UNIT	1	
29	VMP3036	REC AMP P.C.B. BRACKET	1	
30	VMP3017	MP BOARD FRAME	1	
31	VYQ0586	FOOT	4	
32	VMP3021	FRONT BOTTOM FRAME	1	
33	VMZ1839	FRONT FRAME SHIELD	1	
34	VMP3039	SHIELD	1	
35	VHD0277	SCREW	3	
36	VMP3012	FRONT FRAME	1	
37-1	VMP3378	SHAFT HOLDER (L)	1	
37-2	VGQ2668	M CASSETTE GUIDE (L)	1	
37-3	VGQ2670	S CASSETTE GUIDE (L)	1	
37-4	VMB2413	CASSETTE GUIDE SPRING	4	
37-5	VMS4637	CASSETTE GUIDE SHAFT	1	
37-6	VMP3377	SHAFT HOLDER (R)	1	
37-7	VGQ2669	S CASSETTE GIODE (R)	1	
37-8	VGQ2667	M CASSETTE GUIDE (L)	1	
37-9	VMS4786	S CASSETTE GUIDE SHAFT	1	
38	VJR3	CLAMPER	6	
39	VMX1314W075	EDGE GUARD (2)	2	
40	VJA0770	20 CORE SHIELD CABLE	1	AJ-D350E
41	VMZ1838	BOTTOM BARRIER	1	
42	VJF0022	WIRE SADDLE	6	
43	VMP3018	LP BOARD FRAME	1	
44	VGH2657	FR I/F P.C.B. ANGLE	1	
45	VMP3085	FR I/F P.C.B. ANGLE	1	
46	VMP3095	FR HP AMP P.C.B. ANGLE	1	
47	VYQ0688	ROTARY BRACKET (R)	1	
48	VMP3047	S MOTHER COVER	1	
49	VMP3016	SIDE FRAME (R)	1	
50	VMZ1861	MP BOARD SHIELD COVER	1	
51	VMP3079	FRONT LIFT BRACKET (R)	1	
53	VXA4449	JACK TURN ANGLE	1	
54	VMP3022	REAR BOTTOM FRAME	1	
55	VJF0961	WIRE SADDLE	1	
56	VGF0173	RUBBER BUSHING	1	
57	VMG0630	GROMMET	3	
58	VJF0004	WIRE SADDLE	4	
59	VMX1411	P.C.BOARD SPACER	2	
60	VMX1305	COLLAR BUSHING	2	
61	VMX1558	NYLON WASHER	1	
62	VMP4245	PLATE	2	
63	VMX0999	EDGE GUARD	2	
64	VMP4510	CABLE HOLDER	1	
65	VJF0939	EDGING	2	
66	VJF0046	LOCKING SADDLE	1	

Ref.No.	Part No.	Part Name & Description	Pcs	Remarks
67	VGQ2557	EMERGENCY GUIDE PIECE	1	
68	VMZ1870	MASKING SHEET	1	
69	VJF0966	CKS CLAMP	1	
70	VJF1100	CLAMPER	1	
71	VMT0489	CUSHION	1	AJ-D350E ONLY
72	VSC3831	SHIELD CUSHION	1	AJ-D350E ONLY
73	VMZ1860	S.MOTHER COVER	4	
74	VMT0492	CUSHION	1	AJ-D350E ONLY
75	VMT0509	CUSHION	1	AJ-D350E ONLY
76	VMT0494	CUSHION	1	AJ-D350E ONLY
80	XTV3+6FR	SCREW	7	
81	XTV3+6F	SCREW	83	
82	XYN4+F8S	SCREW	1	
83	XYN3+F6	SCREW	13	
84	XTV4+10J	SCREW	8	
86	XSN4+8	SCREW	2	
87	XTV4+6F	SCREW	2	
88	XYN4+C20S	SCREW	3	
89	XUC3FP	E RING	2	
90	XYN3+F5	SCREW	4	
91	XYN4+K16S	SCREW	4	
92	XTB3+6FFZ	SCREW	2	
93	XSB3+6FZS	SCREW	6	
94	XYN3+F6FZ	SCREW	2	
95	XYE3+EF8	SCREW	6	
96	XWA26B	SPRING WASHER	2	
97	XNG26B	NUT	2	
98	XTV3+4F	SCREW	4	
99	XWE26	WASHER	2	
100	XTV3+14F	SCREW	2	
101	XTV3+8F	SCREW	2	
102	XTV3+6FFZ	SCREW	7	

CHASSIS FRAME ASSEMBLY

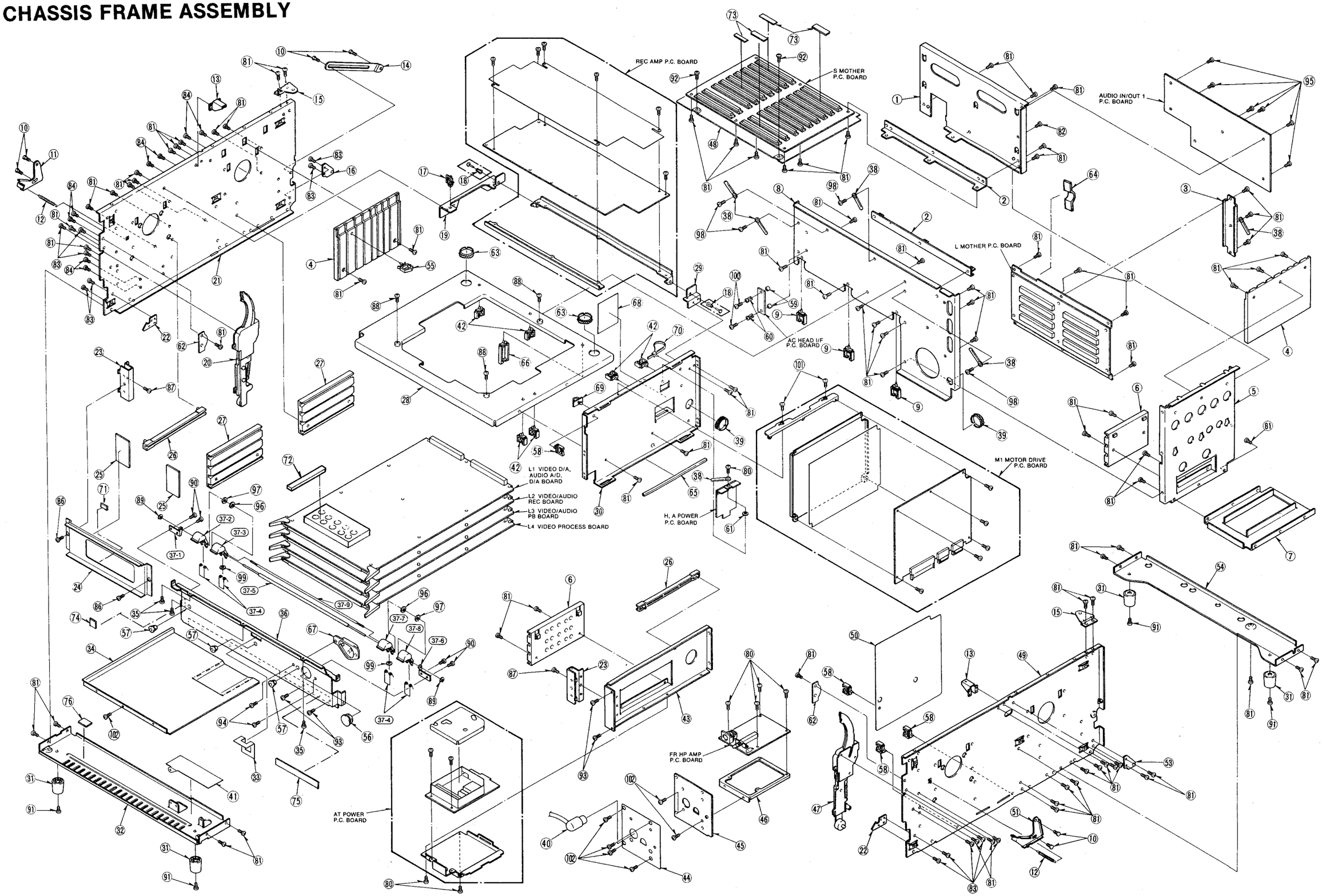

5—18

DRUM ASSEMBLY

Ref.No.	Part No.	Part Name & Description	Pcs	Remarks
1	VXS0129	SLIP RING U	1	
2	VEH0665KIT	CENTER DRUM U	1	AJ-D350P
2	VEH0666KIT	CENTER DRUM U	1	AJ-D350E
3	VEK2372	DEW SENSOR U	1	
4	VAG0273	TAPE GUIDE	1	
5	VJR3	CLAMPER	2	
6	VMA8454	STOPPER	1	
7	VXA5360KIT	DRUM AXIS VERTICALITY U	1	
7-1	VMB2759	AXIS VERTICALITY SPRING	1	
8	VAG0513	UPPER DRUM U	1	

Ref.No.	Part No.	Part Name & Description	Pcs	Remarks
51	VHD0834	SCREW	2	
52	XYN26+A5BW	SCREW	4	
53	XYN2+C3	SCREW	1	
54	VHD0835	HEX SCREW	1	
55	VHD0836	HEX SCREW	2	
56	XYN2+J10	SCREW	2	
57	XUC2VM	E-RING	1	
58	XWGV3Y6G	WASHER	2	
59	XVE2B3V	HEX SCREW	2	

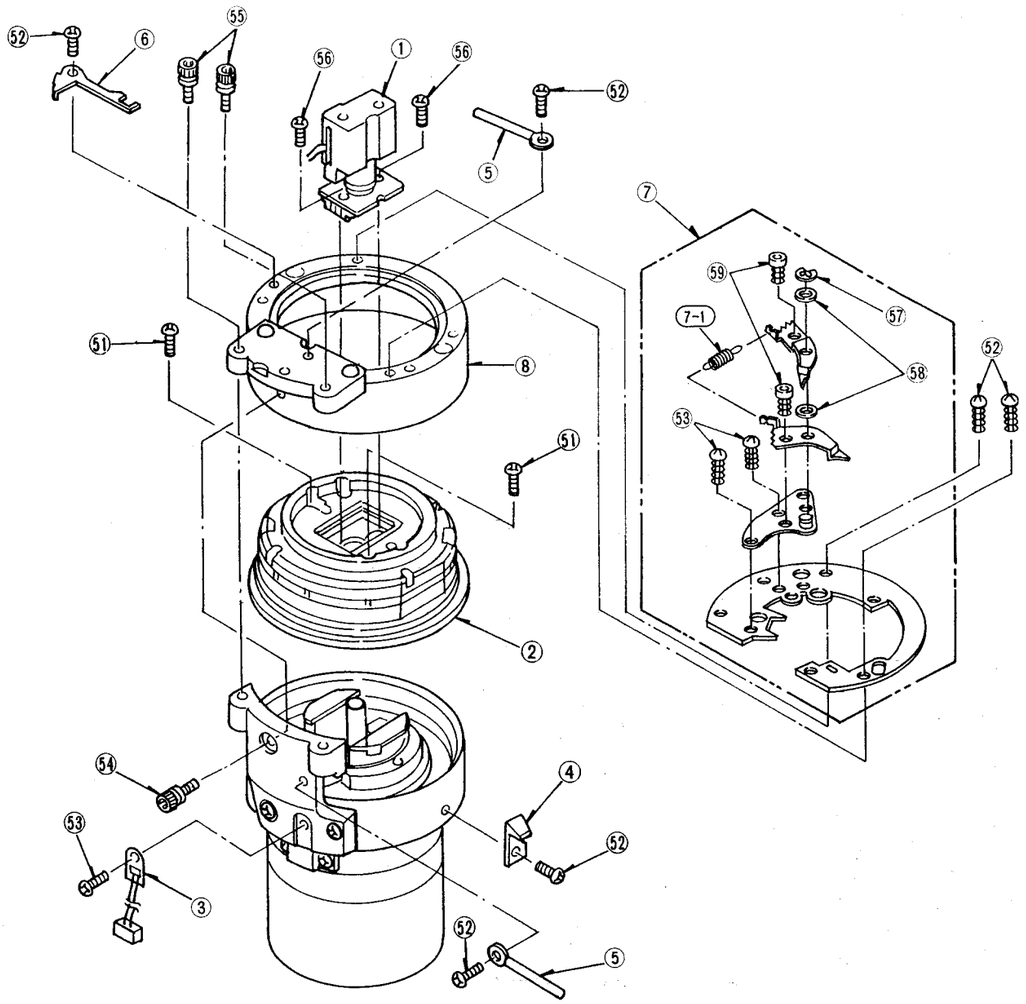

PACKING PARTS ASSEMBLY

Ref.No.	Part No.	Part Name & Description	Pcs	Remarks
1	VPG6466	PACKING CASE (O)	1	
2	PP-901WP	JOINT	6	
3	VGF0291	CONNECTOR COVER	1	
4	VPN3095	CUSHION (TF)	1	
5	VPN3096	CUSHION (TR)	1	
6	VPN3097	CUSHION (BF)	1	
7	VPN3098	CUSHION (BR)	1	
8	VPN3428	PAD	2	
9	VPG6116	ACCESSORY BOX	1	
10	VPG6465	PACKING CASE	1	
11	VPG6466	PACKING CASE	1	

Ref.No.	Part No.	Part Name & Description	Pcs	Remarks
12	VPN3099	TOP PAD	1	
13	VPN3234	ACCESSORY BOX PAD	2	
14	VJA0774	POWER CABLE	1	AJ-D350E
14	VJA0472	POWER CABLE	1	AJ-D350P
14	VJA0775	POWER CABLE	1	AJ-D350B
15	VJA0683	VTR CABLE	1	
16	VJA0561	9PIN CABLE	1	
17	VPN3737	ISOLATE	1	
18	VFK0702	L EXTENSION BOARD	1	
19	VFK0703	S EXTENSION BOARD	1	
20	VPK1359	ACCESSORY BOX	1	

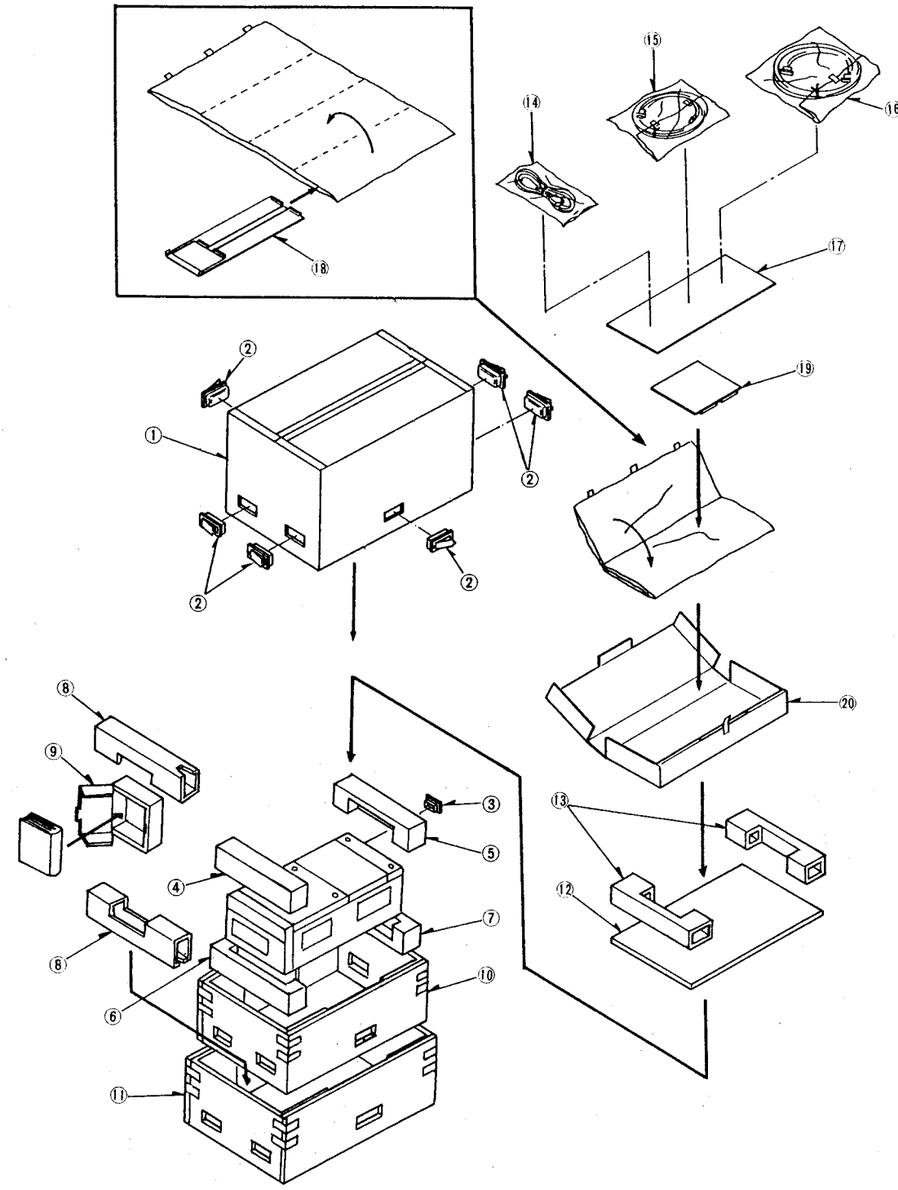

Exploded Views & Parts List

NTSC

Panasonic
Broadcast Systems

CONTENTS

NTSC

ELECTRICAL REPLACEMENT PARTS LIST

L MOTHER P.C.BOARD (VEP80586B) 5-22
L1 A.A/D D/A, V.D/A P.C.BOARD (VEP84105B) 5-22
L2 VIDEO/AUDIO REC P.C.BOARD (VEP88072C) 5-29
L2 SUB P.C.BOARD (VEP88081A) 5-29
L3 VIDEO/AUDIO PB P.C.BOARD (VEP88070C) 5-32
L4 VIDEO PROCESS P.C.BOARD (VEP88071E) 5-34
L4 SUB P.C.BOARD (VEP88090A) 5-34
S MOTHER P.C.BOARD (VEP80593A) 5-39
S1 EQUALIZER CH0 P.C.BOARD (VEP85021A) 5-40
S1 SUB P.C.BOARD (VEP87002A) 5-40
S2 EQUALIZER CH1 P.C.BOARD (VEP85021B) 5-44
S2 SUB P.C.BOARD (VEP87002A) 5-44
S3 CUE AUDIO P.C.BOARD (VEP84107A) 5-48
S4 AT P.C.BOARD (VEP82065C) 5-52
S4 SUB P.C.BOARD (VEP82078A) 5-52
S5 SERVO P.C.BOARD (VEP82067D) 5-55
S5 SUB P.C.BOARD (VEP82085B) 5-55
S6 TIME CODE P.C.BOARD (VEP86091F) 5-58
S6 SUB P.C.BOARD (VEP86133A) 5-58
S7 SYSTEM CONTROL P.C.BOARD (VEP86092E) 5-60
S8 AUDIO PROCESS P.C.BOARD (VEP84111A) 5-61
S8 SUB 1 P.C.BOARD (VEP84158D) 5-61
S8 SUB 2 P.C.BOARD (VEP84137A) 5-61
S8 SUB 3 P.C.BOARD (VEP84142A) 5-61
S9 VIDEO A/D PLL P.C.BOARD (VEP88073A) 5-63
S9 SUB P.C.BOARD (VEP88100B) 5-63
M1 DRIVE P.C.BOARD (VEP82068A) 5-66
M1 SUB 1 P.C.BOARD (VEP82086A) 5-66
M1 SUB 2 P.C.BOARD (VEP82103A) 5-66
REC AMP P.C.BOARD (VEP85023B) 5-68
REC AMP SUB 1 P.C.BOARD (VEP85046A) 5-68
REC AMP SUB 2 P.C.BOARD (VEP85047A) 5-68
HEAD AMP POWER (R) P.C.BOARD (VEP85026A) 5-71
H.A REGULATOR (S) P.C.BOARD (VEP85027A) 5-71
POWER SUPPLY 1 P.C.BOARD (VEP81045A) 5-72
POWER SUB 1 P.C.BOARD (VEP81048A) 5-72
POWER SUPPLY 2 P.C.BOARD (VEP81047A) 5-73
POWER SUB 2 P.C.BOARD (VEP81046A) 5-73
POWER SUB 3 P.C.BOARD (VEP81055A) 5-75

EJECT P.C.BOARD (VEP80591A) ····· 5-75
POWER LED P.C.BOARD (VEP80628A) ····· 5-75
AUTO OFF P.C.BOARD (VEP80627A) ····· 5-75
RF MODE P.C.BOARD (VEP86097A) ····· 5-75
FR SW P.C.BOARD (VEP86093A) ····· 5-76
FR FUNCTION P.C.BOARD (VEP86094A) ····· 5-76
FR BASE 1 P.C.BOARD (VEP86095A) ····· 5-77
FR BASE 2 P.C.BOARD (VEP86096D) ····· 5-77
HEAD PHONE JACK 1 P.C.BOARD (VEP80588A) ····· 5-78
REMOTE JACK 1 P.C.BOARD (VEP80590A) ····· 5-79
REMOTE JACK 2 P.C.BOARD (VEP80609A) ····· 5-79
REMOTE JACK 3 P.C.BOARD (VEP80589A) ····· 5-79
VIDEO IN/OUT P.C.BOARD (VEP88075B) ····· 5-79
AUDIO IN/OUT MONITOR P.C.BOARD (VEP84122A) ····· 5-80
DIGITAL AUDIO IN P.C.BOARD (VEP84125A) ····· 5-81
DIGITAL AUDIO OUT P.C.BOARD (VEP84126A) ····· 5-81
AUDIO IN/OUT 1 P.C.BOARD (VEP84110B) ····· 5-81
MECHA I/F P.C.BOARD (VEP80592A) ····· 5-83
FR H.P AMP P.C.BOARD (VEP84108A) ····· 5-84
BUFFER AMP P.C.BOARD (VEP85028A) ····· 5-84
AT POWER P.C.BOARD (VEP82062B) ····· 5-85
TENSION SENSOR AMP P.C.BOARD (VEP80306B) ····· 5-86
AC HEAD CONNECT P.C.BOARD (VEP84136A) ····· 5-86
REEL I/F P.C.BOARD (VEP80644A) ····· 5-86
REEL I/F P.C.BOARD (VEP80645A) ····· 5-86
SENSOR P.C.BOARD (VEP80641A) ····· 5-86
LED SENSOR P.C.BOARD (VEP80652A) ····· 5-87
PHOTO SENSOR P.C.BOARD (VEP80640A) ····· 5-87
LED SENSOR P.C.BOARD (VEP00P03D) ····· 5-87
DETECT BIT (L) P.C.BOARD (VEP80655A) ····· 5-87
DETECT BIT (R) P.C.BOARD (VEP80642A) ····· 5-87
POSITION PHOTO TR P.C.BOARD (VEP80661A) ····· 5-87
POSITION LED P.C.BOARD (VEP80661B) ····· 5-87
SUB LOADING PHOTO P.C.BOARD (VEP80458B) ····· 5-87
SUB LOADING PHOTO P.C.BOARD (VEP00E25E) ····· 5-87
LOADING PHOTO P.C.BOARD (VEP00E04D) ····· 5-88
UNLOADING P.C.BOARD (VEP00E25D) ····· 5-88
PHOTO SENSOR P.C.BOARD (VEP80639A) ····· 5-88
TR SENSOR P.C.BOARD (VEP00E28D) ····· 5-88

ELECTRICAL REPLACEMENT PARTS LIST

Ref.No.	Part No.	Part Name & Description	Pcs	Remarks
	VEP80586B	P.C.BOARD W/COMPONENT	1	
		L MOTHER		
	VEP84105B	P.C.BOARD W/COMPONENT	1	
		L1 A.A/D D/A, V.D/A		
	VEP88072C	P.C.BOARD W/COMPONENT	1	
		L2 VIDEO/AUDIO REC		
	VEP88081A	P.C.BOARD W/COMPONENT	1	FOR VEP88072C
		L2 SUB		
	VEP88070C	P.C.BOARD W/COMPONENT	1	
		L3 VIDEO/AUDIO PB		
	VEP88071E	P.C.BOARD W/COMPONENT	1	
		L4 VIDEO PROCESS		
	VEP88090A	P.C.BOARD W/COMPONENT	1	FOR VEP88071E
		L4 SUB		
	VEP80593A	P.C.BOARD W/COMPONENT	1	
		S MOTHER		
	VEP85021A	P.C.BOARD W/COMPONENT	1	
		S1 EQUALIZER CH0		
	VEP87002A	P.C.BOARD W/COMPONENT	1	FOR VEP85021A
		S1 SUB		
	VEP85021B	P.C.BOARD W/COMPONENT	1	
		S2 EQUALIZER CH1		
	VEP87002A	P.C.BOARD W/COMPONENT	1	FOR VEP85021B
		S2 SUB		
	VEP84107A	P.C.BOARD W/COMPONENT	1	
		S3 CUE AUDIO		
	VEP82065C	P.C.BOARD W/COMPONENT	1	
		S4 AT		
	VEP82078A	P.C.BOARD W/COMPONENT	1	FOR VEP82065C
		S4 SUB		
	VEP82067D	P.C.BOARD W/COMPONENT	1	
		S5 SERVO		
	VEP82085B	P.C.BOARD W/COMPONENT	1	FOR VEP82067D
		S5 SUB		
	VEP86091F	P.C.BOARD W/COMPONENT	1	
		S6 TIME CODE		
	VEP86133A	P.C.BOARD W/COMPONENT	1	FOR VEP86091F
		S6 SUB		
	VEP86092E	P.C.BOARD W/COMPONENT	1	
		S7 SYSTEM CONTROL		
	VEP84111A	P.C.BOARD W/COMPONENT	1	
		S8 AUDIO PROCESS		
	VEP84158D	P.C.BOARD W/COMPONENT	1	FOR VEP84111A
		S8 SUB 1		
	VEP84137A	P.C.BOARD W/COMPONENT	1	FOR VEP84111A
		S8 SUB 2		
	VEP84142A	P.C.BOARD W/COMPONENT	1	FOR VEP84111A
		S8 SUB 3		
	VEP88073A	P.C.BOARD W/COMPONENT	1	
		S9 VIDEO A/D PLL		
	VEP88100B	P.C.BOARD W/COMPONENT	1	FOR VEP88073A
		S9 SUB		
	VEP82068A	P.C.BOARD W/COMPONENT	1	
		M1 DRIVE		
	VEP82086A	P.C.BOARD W/COMPONENT	1	FOR VEP82068A
		M1 SUB 1		
	VEP82103A	P.C.BOARD W/COMPONENT	1	FOR VEP82068A
		M1 SUB 2		

Ref.No.	Part No.	Part Name & Description	Pcs	Remarks
	VEP85023B	P.C.BOARD W/COMPONENT	1	
		REC AMP		
	VEP85046A	P.C.BOARD W/COMPONENT	1	FOR VEP85023B
		REC AMP SUB 1		
	VEP85047A	P.C.BOARD W/COMPONENT	1	FOR VEP85023B
		REC AMP SUB 2		
	VEP85026A	P.C.BOARD W/COMPONENT	1	
		HEAD AMP POWER (R)		
	VEP85027A	P.C.BOARD W/COMPONENT	1	
		H.A REGULATOR (S)		
	VEP81045A	P.C.BOARD W/COMPONENT	1	
		POWER SUPPLY 1		
	VEP81048A	P.C.BOARD W/COMPONENT	1	FOR VEP81045A
		POWER SUB 1		
	VEP81047A	P.C.BOARD W/COMPONENT	1	
		POWER SUPPLY 2		
	VEP81046A	P.C.BOARD W/COMPONENT	1	FOR VEP81047A
		POWER SUB 2		
	VEP81055A	P.C.BOARD W/COMPONENT	1	
		POWER SUB 3		
	VEP80591A	P.C.BOARD W/COMPONENT	1	
		EJECT		
	VEP80628A	P.C.BOARD W/COMPONENT	1	
		POWER LED		
	VEP80627A	P.C.BOARD W/COMPONENT	1	
		AUTO OFF		
	VEP86097A	P.C.BOARD W/COMPONENT	1	
		RF MODE		
	VEP86093A	P.C.BOARD W/COMPONENT	1	
		FR SW		
	VEP86094A	P.C.BOARD W/COMPONENT	1	
		FR RUNCTION		
	VEP86095A	P.C.BOARD W/COMPONENT	1	
		FR BASE 1		
	VEP86096D	P.C.BOARD W/COMPONENT	1	
		FR BASE 2		
	VEP80588A	P.C.BOARD W/COMPONENT	1	
		HEAD PHONE JACK 1		
	VEP80590A	P.C.BOARD W/COMPONENT	1	
		REMOTE JACK 1		
	VEP80609A	P.C.BOARD W/COMPONENT	1	
		REMOTE JACK 2		
	VEP80589A	P.C.BOARD W/COMPONENT	1	
		REMOTE JACK 3		
	VEP88075B	P.C.BOARD W/COMPONENT	1	
		VIDEO IN/OUT		
	VEP84122A	P.C.BOARD W/COMPONENT	1	
		AUDIO IN/OUT MONITOR		
	VEP84125A	P.C.BOARD W/COMPONENT	1	
		DIGITAL AUDIO IN		
	VEP84126A	P.C.BOARD W/COMPONENT	1	
		DIGITAL AUDIO OUT		
	VEP84110B	P.C.BOARD W/COMPONENT	1	

L MOTHER VEP80586B
L1 A.A/D D/A, V.D/A VEP84105B

Ref.No.	Part No.	Part Name & Description	Pcs	Remarks
		AUDIO IN/OUT 1		
	VEP80592A	P.C.BOARD W/COMPONENT	1	
		MECHA I/F		
	VEP84108A	P.C.BOARD W/COMPONENT	1	
		FR H.P AMP		
	VEP85028A	P.C.BOARD W/COMPONENT	1	
		BUFFER AMP		
	VEP82062B	P.C.BOARD W/COMPONENT	1	
		AT POWER		
	VEP80306B	P.C.BOARD W/COMPONENT	1	
		TENSION SENSOR AMP		
	VEP84136A	P.C.BOARD W/COMPONENT	1	
		AC HEAD CONNECT		
	VEP80644A	P.C.BOARD W/COMPONENT	1	
		REEL I/F		
	VEP80645A	P.C.BOARD W/COMPONENT	1	
		REEL I/F		
	VEP80641A	P.C.BOARD W/COMPONENT	1	
		SENSOR		
	VEP80652A	P.C.BOARD W/COMPONENT	1	
		LED SENSOR		
	VEP80640A	P.C.BOARD W/COMPONENT	1	
		PHOTO SENSOR		
	VEP00P03D	P.C.BOARD W/COMPONENT	1	
		LED SENSOR		
	VEP80655A	P.C.BOARD W/COMPONENT	1	
		DETECT BIT (L)		
	VEP80642A	P.C.BOARD W/COMPONENT	1	
		DETECT BIT (R)		
	VEP80661A	P.C.BOARD W/COMPONENT	1	
		POSITION PHOTO TR		
	VEP80661B	P.C.BOARD W/COMPONENT	1	
		POSITION LED		
	VEP80458B	P.C.BOARD W/COMPONENT	1	
		SUBLOADING PHOTO		
	VEP00E25E	P.C.BOARD W/COMPONENT	1	
		SUB LOADING PHOTO		
	VEP00E04D	P.C.BOARD W/COMPONENT	1	
		LOADING PHOTO		
	VEP00E25D	P.C.BOARD W/COMPONENT	1	
		UNLOADING		
	VEP80639A	P.C.BOARD W/COMPONENT	1	
		PHOTO SENSOR		
	VEP00E28D	P.C.BOARD W/COMPONENT	1	
		TR SENSOR		
	VFK0702	P.C.BOARD W/COMPONENT	1	
		L EXTENSION		
	VFK0703	P.C.BOARD W/COMPONENT	1	
		S EXTENSION		

Ref.No.	Part No.	Part Name & Description	Pcs	Remarks
	VEP80586B	P.C.BOARD W/COMPONENT		
		L MOTHER		
P001-08	VJS2899A096	CONNECTOR (FEMALE)	8	
P009	VJP1145T	CONNECTOR (MALE)	1	
P010	VJP3080	CONNECTOR (MALE)	1	
P012	VJP1235T	CONNECTOR (MALE)	1	
P014	VJP2739A008	CONNECTOR (MALE)	1	
P015	VJP3080	CONNECTOR (MALE)	1	
P017	VJP3083	CONNECTOR (MALE)	1	
P018	VJP3081	CONNECTOR (MALE)	1	
P019	VJP3098A060	CONNECTOR (MALE)	1	
P021	VJP3080	CONNECTOR (MALE)	1	
P022	VJP1233T	CONNECTOR (MALE)	1	
P024	VJP3098A060	CONNECTOR (MALE)	1	
P026	VJP1231T	CONNECTOR (MALE)	1	
P027	VJP3078	CONNECTOR (MALE)	1	
P028	VJP3080	CONNECTOR (MALE)	1	
P029	VJP1235T	CONNECTOR (MALE)	1	
P032	VJP1233T	CONNECTOR (MALE)	1	
P034	VJP2824A010	CONNECTOR (MALE)	1	
P035	VJP2824A003	CONNECTOR (MALE)	1	
P036	VJP1232T	CONNECTOR (MALE)	1	
		MISCELLANEOUS		
	VMP3029	P.C.BOARD HOLDER ANGLE	1	
	VMP3030	P.C.BOARD HOLDER ANGLE	1	
	XNG26BFZ	NUT	16	
	XSN26+8FZ	SCREW	16	
	XTV3+6F	SCREW	6	
	XWA26BFZ	WASHER	16	
	VEP84105B	P.C.BOARD W/COMPONENT		
		L1 A.A/D D/A, V.D/A		
		CAPACITORS		
C4001,02	ECUM1E104ZFN	C.CAPACITOR 25V 0.1U	2	
C4003	ECA1CXLV101	E.CAPACITOR 16V 100U	1	
C4004,05	ECUM1E104ZFN	C.CAPACITOR 25V 0.1U	2	
C4006	ECA1CXLV101	E.CAPACITOR 16V 100U	1	
C4007-09	ECUM1E104ZFN	C.CAPACITOR 25V 0.1U	3	
C4010	VCK0037474KR	C.CAPACITOR	1	
C4011	ECUM1E104ZFN	C.CAPACITOR 25V 0.1U	1	
C4012	ECA1CXLV101	E.CAPACITOR 16V 100U	1	
C4013	ECA1CXLV470	E.CAPACITOR 16V 47U	1	
C4014	ECUM1E104ZFN	C.CAPACITOR 25V 0.1U	1	
C4015	ECA1CXLV470	E.CAPACITOR 16V 47U	1	
C4016	ECUM1E104ZFN	C.CAPACITOR 25V 0.1U	1	
C4017	ECA0JXNV101	E.CAPACITOR 6.3V 100U	1	
C4018	ECUM1H391JN	C.CAPACITOR CH 50V 390P	1	
C4019	ECUM1H560JCN	C.CAPACITOR CH 50V 56P	1	
C4020	ECUM1H020DCN	C.CAPACITOR CH 50V 2P	1	
C4021,22	ECUM1E104ZFN	C.CAPACITOR 25V 0.1U	2	
C4023	ECA1CXLV470	E.CAPACITOR 16V 47U	1	
C4024,25	ECUM1E104ZFN	C.CAPACITOR 25V 0.1U	2	
C4026	ECA1CXLV470	E.CAPACITOR 16V 47U	1	
C4027-29	ECUM1E104ZFN	C.CAPACITOR 25V 0.1U	3	
C4030	ECA1HXNV2R2	E.CAPACITOR 50V 2.2U	1	
C4031	VCK0037474KR	C.CAPACITOR	1	

Ref.No.	Part No.	Part Name & Description	Pcs	Remarks
C4032	ECA1VXNV4R7	E.CAPACITOR 35V 4.7U	1	
C4033-35	ECUM1E104ZFN	C.CAPACITOR 25V 0.1U	3	
C4036	ECUM1H331JCN	C.CAPACITOR CH 50V 330P	1	
C4037	ECUM1H470JCN	C.CAPACITOR CH 50V 47P	1	
C4038,39	ECUM1E104ZFN	C.CAPACITOR 25V 0.1U	2	
C4040	ECUM1H391JN	C.CAPACITOR CH 50V 390P	1	
C4041	ECUM1H020DCN	C.CAPACITOR CH 50V 2P	1	
C4042-45	ECUM1E104ZFN	C.CAPACITOR 25V 0.1U	4	
C4046	ECA1CXLV101	E.CAPACITOR 16V 100U	1	
C4047,48	ECUM1H470JCN	C.CAPACITOR CH 50V 47P	2	
C4049	ECA1CXLV470	E.CAPACITOR 16V 47U	1	
C4050	ECUM1E104ZFN	C.CAPACITOR 25V 0.1U	1	
C4051	ECA1CXLV470	E.CAPACITOR 16V 47U	1	
C4052	ECUM1E104ZFN	C.CAPACITOR 25V 0.1U	1	
C4053,54	ECA1CXLV470	E.CAPACITOR 16V 47U	2	
C4061-63	ECUM1E104ZFN	C.CAPACITOR 25V 0.1U	3	
C4064	ECA1CXLV470	E.CAPACITOR 16V 47U	1	
C4065	ECUM1E104ZFN	C.CAPACITOR 25V 0.1U	1	
C4066	ECA1CXLV470	E.CAPACITOR 16V 47U	1	
C4067	ECUM1E104ZFN	C.CAPACITOR 25V 0.1U	1	
C4068	ECA1CXLV470	E.CAPACITOR 16V 47U	1	
C4069	ECUM1E104ZFN	C.CAPACITOR 25V 0.1U	1	
C4070	ECA1CXLV470	E.CAPACITOR 16V 47U	1	
C4071-74	ECUM1E104ZFN	C.CAPACITOR 25V 0.1U	4	
C4075	ECA1CXLV470	E.CAPACITOR 16V 47U	1	
C4076	ECUM1E104ZFN	C.CAPACITOR 25V 0.1U	1	
C4077	ECA1CXLV470	E.CAPACITOR 16V 47U	1	
C4078,79	ECUM1E104ZFN	C.CAPACITOR 25V 0.1U	2	
C4080	ECUM1H270JCN	C.CAPACITOR CH 50V 27P	1	
C4081	ECUM1H151JCN	C.CAPACITOR CH 50V 150P	1	
C4082,83	ECUM1E104ZFN	C.CAPACITOR 25V 0.1U	2	
C4084	ECUM1H102JN	C.CAPACITOR CH 50V 1000P	1	
C4085,86	ECUM1E104ZFN	C.CAPACITOR 25V 0.1U	2	
C4087	ECA1CXLV470	E.CAPACITOR 16V 47U	1	
C4088	ECUM1E104ZFN	C.CAPACITOR 25V 0.1U	1	
C4089	ECA1CXLV470	E.CAPACITOR 16V 47U	1	
C4090,91	ECUM1E104ZFN	C.CAPACITOR 25V 0.1U	2	
C4092	ECA1CXLV101	E.CAPACITOR 16V 100U	1	
C4093,94	ECUM1E104ZFN	C.CAPACITOR 25V 0.1U	2	
C4095	ECA1CXLV101	E.CAPACITOR 16V 100U	1	
C4096-98	ECUM1E104ZFN	C.CAPACITOR 25V 0.1U	3	
C4099-03	ECUM1H180JCN	C.CAPACITOR CH 50V 18P	5	
C4104	ECUM1H020DCN	C.CAPACITOR CH 50V 2P	1	
C4201	ECUM1H101JCN	C.CAPACITOR CH 50V 100P	1	
C4202-07	ECUM1H103ZFN	C.CAPACITOR CH 50V 0.01U	6	
C4208	ECA1CXNV100	E.CAPACITOR 16V 10U	1	
C4209,10	ECUM1H103ZFN	C.CAPACITOR CH 50V 0.01U	2	
C4211,12	ECUM1E104ZFN	C.CAPACITOR 25V 0.1U	2	
C4213	ECUM1H102JN	C.CAPACITOR CH 50V 1000P	1	
C4214	ECUM1H470JCN	C.CAPACITOR CH 50V 47P	1	
C4215	ECUM1H102JN	C.CAPACITOR CH 50V 1000P	1	
C4216-19	ECUM1H103ZFN	C.CAPACITOR CH 50V 0.01U	4	
C4220-23	ECEA1CPZ101	E.CAPACITOR 16V 100U	4	
C4224,25	ECEA1EPZ101	E.CAPACITOR 25V 100U	2	
C4226,27	ECEA0JPZ221	E.CAPACITOR 6.3V 220U	2	
C4228	ECUM1H101JCN	C.CAPACITOR CH 50V 100P	1	
C4231,32	ECUM1H103ZFN	C.CAPACITOR CH 50V 0.01U	2	
C4301,02	ECEA1CBZ330	E.CAPACITOR 16V 33U	2	
C4303-06	ECUM1H103ZFN	C.CAPACITOR CH 50V 0.01U	4	
C4307	ECEA1CPZ100	E.CAPACITOR 16V 10U	1	
C4308	ECUM1H330JCN	C.CAPACITOR CH 50V 33P	1	
C4309,10	ECUM1H103ZFN	C.CAPACITOR CH 50V 0.01U	2	
C4311	ECEA1APZ221	E.CAPACITOR 10V 220U	1	
C4312,13	ECUM1E104ZFN	C.CAPACITOR 25V 0.1U	2	
C4314	ECEA1APZ101	E.CAPACITOR 10V 100U	1	
C4315	ECEA1CPZ221	E.CAPACITOR 16V 220U	1	
C4316,17	ECUM1E104ZFN	C.CAPACITOR 25V 0.1U	2	
C4318	ECEA1CPZ101	E.CAPACITOR 16V 100U	1	
C4319	ECUM1E104ZFN	C.CAPACITOR 25V 0.1U	1	
C4320	ECHS1H472GZ	P.CAPACITOR 50V 4700P	1	
C4321	ECUM1H100DCN	C.CAPACITOR CH 50V 10P	1	
C4322,23	ECEA1CBZ330	E.CAPACITOR 16V 33U	2	
C4324-27	ECUM1H103ZFN	C.CAPACITOR CH 50V 0.01U	4	
C4328,29	ECUM1H471JN	C.CAPACITOR CH 50V 470P	2	
C4330,31	ECUM1H121JCN	C.CAPACITOR CH 50V 120P	2	

Ref.No.	Part No.	Part Name & Description	Pcs	Remarks
C4332,33	ECUM1H182JN	C.CAPACITOR CH 50V 1800P	2	
C4334,35	ECEA1CBZ330	E.CAPACITOR 16V 33U	2	
C4336-39	ECUM1H103ZFN	C.CAPACITOR CH 50V 0.01U	4	
C4340,41	ECUM1H103KBN	C.CAPACITOR CH 50V 0.01U	2	
C4342,43	ECUM1E104ZFN	C.CAPACITOR 25V 0.1U	2	
C4344	ECUM1H103KBN	C.CAPACITOR CH 50V 0.01U	1	
C4345	ECEA1CPZ100	E.CAPACITOR 16V 10U	1	
C4346	ECUM1E104ZFN	C.CAPACITOR 25V 0.1U	1	
C4347	ECUM1H103KBN	C.CAPACITOR CH 50V 0.01U	1	
C4348-50	ECUM1E104ZFN	C.CAPACITOR 25V 0.1U	3	
C4351,52	ECEA1CBZ330	E.CAPACITOR 16V 33U	2	
C4353-56	ECUM1H103ZFN	C.CAPACITOR CH 50V 0.01U	4	
C4357	ECEA1CPZ100	E.CAPACITOR 16V 10U	1	
C4358	ECUM1H330JCN	C.CAPACITOR CH 50V 33P	1	
C4359,60	ECUM1H103ZFN	C.CAPACITOR CH 50V 0.01U	2	
C4361	ECEA1CPZ221	E.CAPACITOR 16V 220U	1	
C4362,63	ECUM1E104ZFN	C.CAPACITOR 25V 0.1U	2	
C4364	ECEA1CPZ101	E.CAPACITOR 16V 100U	1	
C4365	ECUM1E104ZFN	C.CAPACITOR 25V 0.1U	1	
C4366	ECEA1APZ221	E.CAPACITOR 10V 220U	1	
C4367,68	ECUM1E104ZFN	C.CAPACITOR 25V 0.1U	2	
C4369	ECEA1APZ101	E.CAPACITOR 10V 100U	1	
C4370	ECHS1H472GZ	P.CAPACITOR 50V 4700P	1	
C4371	ECUM1H100DCN	C.CAPACITOR CH 50V 10P	1	
C4372,73	ECEA1CBZ330	E.CAPACITOR 16V 33U	2	
C4374-77	ECUM1H103ZFN	C.CAPACITOR CH 50V 0.01U	4	
C4378,79	ECUM1H471JN	C.CAPACITOR CH 50V 470P	2	
C4380,81	ECUM1H121JCN	C.CAPACITOR CH 50V 120P	2	
C4382,83	ECUM1H182JN	C.CAPACITOR CH 50V 1800P	2	
C4384,85	ECEA1CBZ330	E.CAPACITOR 16V 33U	2	
C4386-89	ECUM1H103ZFN	C.CAPACITOR CH 50V 0.01U	4	
C4390,91	ECUM1H103KBN	C.CAPACITOR CH 50V 0.01U	2	
C4392,93	ECUM1E104ZFN	C.CAPACITOR 25V 0.1U	2	
C4394	ECUM1H103KBN	C.CAPACITOR CH 50V 0.01U	1	
C4395	ECEA1CPZ100	E.CAPACITOR 16V 10U	1	
C4396	ECUM1E104ZFN	C.CAPACITOR 25V 0.1U	1	
C4397	ECUM1H103KBN	C.CAPACITOR CH 50V 0.01U	1	
C4398-02	ECUM1E104ZFN	C.CAPACITOR 25V 0.1U	5	
C4403,04	ECUM1H103ZFN	C.CAPACITOR CH 50V 0.01U	2	
C4405,06	ECEA1APZ101	E.CAPACITOR 10V 100U	2	
C4407,08	ECUM1H103ZFN	C.CAPACITOR CH 50V 0.01U	2	
C4409,10	ECEA1APZ101	E.CAPACITOR 10V 100U	2	
C4411,12	ECUM1H103ZFN	C.CAPACITOR CH 50V 0.01U	2	
C4413	ECUM1E104ZFN	C.CAPACITOR 25V 0.1U	1	
C4414	ECEA1APZ221	E.CAPACITOR 10V 220U	1	
C4416-19	ECEA1CPZ100	E.CAPACITOR 16V 10U	4	
C4421,22	ECEA1CBZ330	E.CAPACITOR 16V 33U	2	
C4423-26	ECUM1H103ZFN	C.CAPACITOR CH 50V 0.01U	4	
C4427	ECEA1CPZ100	E.CAPACITOR 16V 10U	1	
C4428	ECUM1H330JCN	C.CAPACITOR CH 50V 33P	1	
C4429,30	ECUM1H103ZFN	C.CAPACITOR CH 50V 0.01U	2	
C4431	ECEA1APZ221	E.CAPACITOR 10V 220U	1	
C4432,33	ECUM1E104ZFN	C.CAPACITOR 25V 0.1U	2	
C4434	ECEA1APZ101	E.CAPACITOR 10V 100U	1	
C4435	ECEA1CPZ221	E.CAPACITOR 16V 220U	1	
C4436,37	ECUM1E104ZFN	C.CAPACITOR 25V 0.1U	2	
C4438	ECEA1CPZ101	E.CAPACITOR 16V 100U	1	
C4439	ECUM1E104ZFN	C.CAPACITOR 25V 0.1U	1	
C4440	ECHS1H472GZ	P.CAPACITOR 50V 4700P	1	
C4441	ECUM1H100DCN	C.CAPACITOR CH 50V 10P	1	
C4442,43	ECEA1CBZ330	E.CAPACITOR 16V 33U	2	
C4444-47	ECUM1H103ZFN	C.CAPACITOR CH 50V 0.01U	4	
C4448,49	ECUM1H471JN	C.CAPACITOR CH 50V 470P	2	
C4450,51	ECUM1H121JCN	C.CAPACITOR CH 50V 120P	2	
C4452,53	ECUM1H182JN	C.CAPACITOR CH 50V 1800P	2	
C4454,55	ECEA1CBZ330	E.CAPACITOR 16V 33U	2	
C4456-59	ECUM1H103ZFN	C.CAPACITOR CH 50V 0.01U	4	
C4460,61	ECUM1H103KBN	C.CAPACITOR CH 50V 0.01U	2	
C4462,63	ECUM1E104ZFN	C.CAPACITOR 25V 0.1U	2	
C4464	ECUM1H103KBN	C.CAPACITOR CH 50V 0.01U	1	
C4465	ECEA1CPZ100	E.CAPACITOR 16V 10U	1	
C4466	ECUM1E104ZFN	C.CAPACITOR 25V 0.1U	1	
C4467	ECUM1H103KBN	C.CAPACITOR CH 50V 0.01U	1	
C4468-70	ECUM1E104ZFN	C.CAPACITOR 25V 0.1U	3	
C4471,72	ECEA1CBZ330	E.CAPACITOR 16V 33U	2	

Ref.No.	Part No.	Part Name & Description	Pcs	Remarks
C4473-76	ECUM1H103ZFN	C.CAPACITOR CH 50V 0.01U	4	
C4477	ECEA1CPZ100	E.CAPACITOR 16V 10U	1	
C4478	ECUM1H330JCN	C.CAPACITOR CH 50V 33P	1	
C4479,80	ECUM1H103ZFN	C.CAPACITOR CH 50V 0.01U	2	
C4481	ECEA1CPZ221	E.CAPACITOR 16V 220U	1	
C4482,83	ECUM1E104ZFN	C.CAPACITOR 25V 0.1U	2	
C4484	ECEA1CPZ101	E.CAPACITOR 16V 100U	1	
C4485	ECUM1E104ZFN	C.CAPACITOR 25V 0.1U	1	
C4486	ECEA1APZ221	E.CAPACITOR 10V 220U	1	
C4487,88	ECUM1E104ZFN	C.CAPACITOR 25V 0.1U	2	
C4489	ECEA1APZ101	E.CAPACITOR 10V 100U	1	
C4490	ECHS1H472GZ	P.CAPACITOR 50V 4700P	1	
C4491	ECUM1H100DCN	C.CAPACITOR CH 50V 10P	1	
C4492,93	ECEA1CBZ330	E.CAPACITOR 16V 33U	2	
C4494-97	ECUM1H103ZFN	C.CAPACITOR CH 50V 0.01U	4	
C4498,99	ECUM1H471JN	C.CAPACITOR CH 50V 470P	2	
C4500,01	ECUM1H121JCN	C.CAPACITOR CH 50V 120P	2	
C4502,03	ECUM1H182JN	C.CAPACITOR CH 50V 1800P	2	
C4504,05	ECEA1CBZ330	E.CAPACITOR 16V 33U	2	
C4506-09	ECUM1H103ZFN	C.CAPACITOR CH 50V 0.01U	4	
C4510,11	ECUM1H103KBN	C.CAPACITOR CH 50V 0.01U	2	
C4512,13	ECUM1E104ZFN	C.CAPACITOR 25V 0.1U	2	
C4514	ECUM1H103KBN	C.CAPACITOR CH 50V 0.01U	1	
C4515	ECEA1CPZ100	E.CAPACITOR 16V 10U	1	
C4516	ECUM1E104ZFN	C.CAPACITOR 25V 0.1U	1	
C4517	ECUM1H103KBN	C.CAPACITOR CH 50V 0.01U	1	
C4518-22	ECUM1E104ZFN	C.CAPACITOR 25V 0.1U	5	
C4523,24	ECUM1H103ZFN	C.CAPACITOR CH 50V 0.01U	2	
C4525,26	ECEA1APZ101	E.CAPACITOR 10V 100U	2	
C4527,28	ECUM1H103ZFN	C.CAPACITOR CH 50V 0.01U	2	
C4529,30	ECEA1APZ101	E.CAPACITOR 10V 100U	2	
C4531,32	ECUM1H103ZFN	C.CAPACITOR CH 50V 0.01U	2	
C4533	ECUM1E104ZFN	C.CAPACITOR 25V 0.1U	1	
C4534	ECEA1APZ221	E.CAPACITOR 10V 220U	1	
C4536-39	ECEA1CPZ100	E.CAPACITOR 16V 10U	4	
C4551,52	ECUM1E104ZFN	C.CAPACITOR 25V 0.1U	2	
C4601	ECUM1E104ZFN	C.CAPACITOR 25V 0.1U	1	
C4602	ECEA1APZ101	E.CAPACITOR 10V 100U	1	
C4603	ECUM1E104ZFN	C.CAPACITOR 25V 0.1U	1	
C4604,05	ECEA1APZ101	E.CAPACITOR 10V 100U	2	
C4606,07	ECUM1E104ZFN	C.CAPACITOR 25V 0.1U	2	
C4608	ECEA0JPZ221	E.CAPACITOR 6.3V 220U	1	
C4609-15	ECUM1E104ZFN	C.CAPACITOR 25V 0.1U	7	
C4616	ECUM1H101JCN	C.CAPACITOR CH 50V 100P	1	
C4617	ECUM1E104ZFN	C.CAPACITOR 25V 0.1U	1	
C4618	ECUM1H101JCN	C.CAPACITOR CH 50V 100P	1	
C4619-21	ECUM1E104ZFN	C.CAPACITOR 25V 0.1U	3	
C4622	ECEA0JPZ221	E.CAPACITOR 6.3V 220U	1	
C4623-26	ECUM1H151JCN	C.CAPACITOR CH 50V 150P	4	
C4627,28	ECUM1H470JCN	C.CAPACITOR CH 50V 47P	2	
C4629,30	ECUM1H330JCN	C.CAPACITOR CH 50V 33P	2	
C4631,32	ECUM1H470JCN	C.CAPACITOR CH 50V 47P	2	
C4633	ECUM1H103ZFN	C.CAPACITOR CH 50V 0.01U	1	
C4634	ECEA1CPZ100	E.CAPACITOR 16V 10U	1	
C4635	ECUM1H103ZFN	C.CAPACITOR CH 50V 0.01U	1	
C4636	ECEA1CPZ100	E.CAPACITOR 16V 10U	1	
C4637,38	ECUM1H471JN	C.CAPACITOR CH 50V 470P	2	
C4639,40	ECUM1H103ZFN	C.CAPACITOR CH 50V 0.01U	2	
C4641	ECUM1H222KBN	C.CAPACITOR CH 50V 2200P	1	
C4642,43	ECUM1H330JCN	C.CAPACITOR CH 50V 33P	2	
C4644	ECUM1H222KBN	C.CAPACITOR CH 50V 2200P	1	
C4645,46	ECUM1H103ZFN	C.CAPACITOR CH 50V 0.01U	2	
C4647	ECUM1H120JCN	C.CAPACITOR CH 50V 12P	1	
C4648,49	ECUM1H103ZFN	C.CAPACITOR CH 50V 0.01U	2	
C4650,51	ECUM1H680JCN	C.CAPACITOR CH 50V 68P	2	
C4652,53	ECUM1H103ZFN	C.CAPACITOR CH 50V 0.01U	2	
C4654	ECHS1H472GZ	P.CAPACITOR 50V 4700P	1	
C4655	ECEA1CBZ330	E.CAPACITOR 16V 33U	1	
C4656	ECEA1CPZ101	E.CAPACITOR 16V 100U	1	
C4657	ECUM1E104ZFN	C.CAPACITOR 25V 0.1U	1	
C4658	ECEA1CPZ101	E.CAPACITOR 16V 100U	1	
C4659	ECUM1E104ZFN	C.CAPACITOR 25V 0.1U	1	
C4660	ECUM1H103ZFN	C.CAPACITOR CH 50V 0.01U	1	
C4661,62	ECEA1CPZ101	E.CAPACITOR 16V 100U	2	
C4663	ECUM1E104ZFN	C.CAPACITOR 25V 0.1U	1	

Ref.No.	Part No.	Part Name & Description	Pcs	Remarks
C4664	ECEA1CPZ101	E.CAPACITOR 16V 100U	1	
C4665	ECUM1E104ZFN	C.CAPACITOR 25V 0.1U	1	
C4666	ECUM1H103ZFN	C.CAPACITOR CH 50V 0.01U	1	
C4667	ECEA1CPZ101	E.CAPACITOR 16V 100U	1	
C4668	ECUM1E104ZFN	C.CAPACITOR 25V 0.1U	1	
C4669	ECEA1APZ101	E.CAPACITOR 10V 100U	1	
C4670	ECUM1E104ZFN	C.CAPACITOR 25V 0.1U	1	
C4671,72	ECEA1APZ101	E.CAPACITOR 10V 100U	2	
C4673-76	ECUM1E104ZFN	C.CAPACITOR 25V 0.1U	4	
C4677	ECUM1H101JCN	C.CAPACITOR CH 50V 100P	1	
C4678-80	ECUM1E104ZFN	C.CAPACITOR 25V 0.1U	3	
C4681	ECEA0JPZ221	E.CAPACITOR 6.3V 220U	1	
C4682-85	ECUM1H151JCN	C.CAPACITOR CH 50V 150P	4	
C4686,87	ECUM1H470JCN	C.CAPACITOR CH 50V 47P	2	
C4688,89	ECUM1H330JCN	C.CAPACITOR CH 50V 33P	2	
C4690,91	ECUM1H470JCN	C.CAPACITOR CH 50V 47P	2	
C4692	ECUM1H103ZFN	C.CAPACITOR CH 50V 0.01U	1	
C4693	ECEA1CPZ100	E.CAPACITOR 16V 10U	1	
C4694	ECUM1H103ZFN	C.CAPACITOR CH 50V 0.01U	1	
C4695	ECEA1CPZ100	E.CAPACITOR 16V 10U	1	
C4696,97	ECUM1H471JN	C.CAPACITOR CH 50V 470P	2	
C4698,99	ECUM1H103ZFN	C.CAPACITOR CH 50V 0.01U	2	
C4700	ECUM1H222KBN	C.CAPACITOR CH 50V 2200P	1	
C4701,02	ECUM1H330JCN	C.CAPACITOR CH 50V 33P	2	
C4703	ECUM1H222KBN	C.CAPACITOR CH 50V 2200P	1	
C4704,05	ECUM1H103ZFN	C.CAPACITOR CH 50V 0.01U	2	
C4706	ECUM1H120JCN	C.CAPACITOR CH 50V 12P	1	
C4707,08	ECUM1H103ZFN	C.CAPACITOR CH 50V 0.01U	2	
C4709,10	ECUM1H680JCN	C.CAPACITOR CH 50V 68P	2	
C4711,12	ECUM1H103ZFN	C.CAPACITOR CH 50V 0.01U	2	
C4713	ECHS1H472GZ	P.CAPACITOR 50V 4700P	1	
C4714	ECEA1CBZ330	E.CAPACITOR 16V 33U	1	
C4715	ECEA1CPZ101	E.CAPACITOR 16V 100U	1	
C4716	ECUM1E104ZFN	C.CAPACITOR 25V 0.1U	1	
C4717	ECEA1CPZ101	E.CAPACITOR 16V 100U	1	
C4718	ECUM1E104ZFN	C.CAPACITOR 25V 0.1U	1	
C4719	ECUM1H104KBM	C.CAPACITOR CH 50V 0.1U	1	
C4720	ECUM1E104ZFN	C.CAPACITOR 25V 0.1U	1	
C4731	ECUM1E104ZFN	C.CAPACITOR 25V 0.1U	1	
C4732	ECEA1APZ101	E.CAPACITOR 10V 100U	1	
C4733	ECUM1E104ZFN	C.CAPACITOR 25V 0.1U	1	
C4734,35	ECEA1APZ101	E.CAPACITOR 10V 100U	2	
C4736,37	ECUM1E104ZFN	C.CAPACITOR 25V 0.1U	2	
C4738	ECEA0JPZ221	E.CAPACITOR 6.3V 220U	1	
C4739-45	ECUM1E104ZFN	C.CAPACITOR 25V 0.1U	7	
C4746	ECUM1H101JCN	C.CAPACITOR CH 50V 100P	1	
C4747	ECUM1E104ZFN	C.CAPACITOR 25V 0.1U	1	
C4748	ECUM1H101JCN	C.CAPACITOR CH 50V 100P	1	
C4749-51	ECUM1E104ZFN	C.CAPACITOR 25V 0.1U	3	
C4752	ECEA0JPZ221	E.CAPACITOR 6.3V 220U	1	
C4753-56	ECUM1H151JCN	C.CAPACITOR CH 50V 150P	4	
C4757,58	ECUM1H470JCN	C.CAPACITOR CH 50V 47P	2	
C4759,60	ECUM1H330JCN	C.CAPACITOR CH 50V 33P	2	
C4761,62	ECUM1H470JCN	C.CAPACITOR CH 50V 47P	2	
C4763	ECUM1H103ZFN	C.CAPACITOR CH 50V 0.01U	1	
C4764	ECEA1CPZ100	E.CAPACITOR 16V 10U	1	
C4765	ECUM1H103ZFN	C.CAPACITOR CH 50V 0.01U	1	
C4766	ECEA1CPZ100	E.CAPACITOR 16V 10U	1	
C4767,68	ECUM1H471JN	C.CAPACITOR CH 50V 470P	2	
C4769,70	ECUM1H103ZFN	C.CAPACITOR CH 50V 0.01U	2	
C4771	ECUM1H222KBN	C.CAPACITOR CH 50V 2200P	1	
C4772,73	ECUM1H330JCN	C.CAPACITOR CH 50V 33P	2	
C4774	ECUM1H222KBN	C.CAPACITOR CH 50V 2200P	1	
C4775,76	ECUM1H103ZFN	C.CAPACITOR CH 50V 0.01U	2	
C4777	ECUM1H120JCN	C.CAPACITOR CH 50V 12P	1	
C4778,79	ECUM1H103ZFN	C.CAPACITOR CH 50V 0.01U	2	
C4780,81	ECUM1H680JCN	C.CAPACITOR CH 50V 68P	2	
C4782,83	ECUM1H103ZFN	C.CAPACITOR CH 50V 0.01U	2	
C4784	ECHS1H472GZ	P.CAPACITOR 50V 4700P	1	
C4785	ECEA1CBZ330	E.CAPACITOR 16V 33U	1	
C4786	ECEA1CPZ101	E.CAPACITOR 16V 100U	1	
C4787	ECUM1E104ZFN	C.CAPACITOR 25V 0.1U	1	
C4788	ECEA1CPZ101	E.CAPACITOR 16V 100U	1	
C4789	ECUM1E104ZFN	C.CAPACITOR 25V 0.1U	1	
C4790	ECUM1H103ZFN	C.CAPACITOR CH 50V 0.01U	1	

Ref.No.	Part No.	Part Name & Description	Pcs	Remarks
C4791,92	ECEA1CPZ101	E.CAPACITOR 16V 100U	2	
C4793	ECUM1E104ZFN	C.CAPACITOR 25V 0.1U	1	
C4794	ECEA1CPZ101	E.CAPACITOR 16V 100U	1	
C4795	ECUM1E104ZFN	C.CAPACITOR 25V 0.1U	1	
C4796	ECUM1H103ZFN	C.CAPACITOR CH 50V 0.01U	1	
C4797	ECEA1CPZ101	E.CAPACITOR 16V 100U	1	
C4798	ECUM1E104ZFN	C.CAPACITOR 25V 0.1U	1	
C4799	ECEA1APZ101	E.CAPACITOR 10V 100U	1	
C4800	ECUM1E104ZFN	C.CAPACITOR 25V 0.1U	1	
C4801,02	ECEA1APZ101	E.CAPACITOR 10V 100U	2	
C4803-06	ECUM1E104ZFN	C.CAPACITOR 25V 0.1U	4	
C4807	ECUM1H101JCN	C.CAPACITOR CH 50V 100P	1	
C4808-10	ECUM1E104ZFN	C.CAPACITOR 25V 0.1U	3	
C4811	ECEA0JPZ221	E.CAPACITOR 6.3V 220U	1	
C4812-15	ECUM1H151JCN	C.CAPACITOR CH 50V 150P	4	
C4816,17	ECUM1H470JCN	C.CAPACITOR CH 50V 47P	2	
C4818,19	ECUM1H330JCN	C.CAPACITOR CH 50V 33P	2	
C4820,21	ECUM1H470JCN	C.CAPACITOR CH 50V 47P	2	
C4822	ECUM1H103ZFN	C.CAPACITOR CH 50V 0.01U	1	
C4823	ECEA1CPZ100	E.CAPACITOR 16V 10U	1	
C4824	ECUM1H103ZFN	C.CAPACITOR CH 50V 0.01U	1	
C4825	ECEA1CPZ100	E.CAPACITOR 16V 10U	1	
C4826,27	ECUM1H471JN	C.CAPACITOR CH 50V 470P	2	
C4828,29	ECUM1H103ZFN	C.CAPACITOR CH 50V 0.01U	2	
C4830	ECUM1H222KBN	C.CAPACITOR CH 50V 2200P	1	
C4831,32	ECUM1H330JCN	C.CAPACITOR CH 50V 33P	2	
C4833	ECUM1H222KBN	C.CAPACITOR CH 50V 2200P	1	
C4834,35	ECUM1H103ZFN	C.CAPACITOR CH 50V 0.01U	2	
C4836	ECUM1H120JCN	C.CAPACITOR CH 50V 12P	1	
C4837,38	ECUM1H103ZFN	C.CAPACITOR CH 50V 0.01U	2	
C4839,40	ECUM1H680JCN	C.CAPACITOR CH 50V 68P	2	
C4841,42	ECUM1H103ZFN	C.CAPACITOR CH 50V 0.01U	2	
C4843	ECHS1H472GZ	P.CAPACITOR 50V 4700P	1	
C4844	ECEA1CBZ330	E.CAPACITOR 16V 33U	1	
C4845	ECEA1CPZ101	E.CAPACITOR 16V 100U	1	
C4846	ECUM1E104ZFN	C.CAPACITOR 25V 0.1U	1	
C4847	ECEA1CPZ101	E.CAPACITOR 16V 100U	1	
C4848	ECUM1E104ZFN	C.CAPACITOR 25V 0.1U	1	
C4850	ECUM1E104ZFN	C.CAPACITOR 25V 0.1U	1	
C4861	ECUM1E104ZFN	C.CAPACITOR 25V 0.1U	1	
C4862	ECEA1APZ101	E.CAPACITOR 10V 100U	1	
C4863	ECUM1E104ZFN	C.CAPACITOR 25V 0.1U	1	
C4864,65	ECEA1APZ101	E.CAPACITOR 10V 100U	2	
C4866,67	ECUM1E104ZFN	C.CAPACITOR 25V 0.1U	2	
C4868	ECEA0JPZ221	E.CAPACITOR 6.3V 220U	1	
C4869-75	ECUM1E104ZFN	C.CAPACITOR 25V 0.1U	7	
C4876	ECUM1H101JCN	C.CAPACITOR CH 50V 100P	1	
C4877	ECUM1E104ZFN	C.CAPACITOR 25V 0.1U	1	
C4878	ECUM1H101JCN	C.CAPACITOR CH 50V 100P	1	
C4879-81	ECUM1E104ZFN	C.CAPACITOR 25V 0.1U	3	
C4882	ECEA0JPZ221	E.CAPACITOR 6.3V 220U	1	
C4883-86	ECUM1H151JCN	C.CAPACITOR CH 50V 150P	4	
C4887,88	ECUM1H470JCN	C.CAPACITOR CH 50V 47P	2	
C4889,90	ECUM1H330JCN	C.CAPACITOR CH 50V 33P	2	
C4891,92	ECUM1H470JCN	C.CAPACITOR CH 50V 47P	2	
C4893	ECUM1H103ZFN	C.CAPACITOR CH 50V 0.01U	1	
C4894	ECEA1CPZ100	E.CAPACITOR 16V 10U	1	
C4895	ECUM1H103ZFN	C.CAPACITOR CH 50V 0.01U	1	
C4896	ECEA1CPZ100	E.CAPACITOR 16V 10U	1	
C4897,98	ECUM1H471JN	C.CAPACITOR CH 50V 470P	2	
C4899,00	ECUM1H103ZFN	C.CAPACITOR CH 50V 0.01U	2	
C4901	ECUM1H222KBN	C.CAPACITOR CH 50V 2200P	1	
C4902,03	ECUM1H330JCN	C.CAPACITOR CH 50V 33P	2	
C4904	ECUM1H222KBN	C.CAPACITOR CH 50V 2200P	1	
C4905,06	ECUM1H103ZFN	C.CAPACITOR CH 50V 0.01U	2	
C4907	ECUM1H120JCN	C.CAPACITOR CH 50V 12P	1	
C4908,09	ECUM1H103ZFN	C.CAPACITOR CH 50V 0.01U	2	
C4910,11	ECUM1H680JCN	C.CAPACITOR CH 50V 68P	2	
C4912,13	ECUM1H103ZFN	C.CAPACITOR CH 50V 0.01U	2	
C4914	ECHS1H472GZ	P.CAPACITOR 50V 4700P	1	
C4915	ECEA1CBZ330	E.CAPACITOR 16V 33U	1	
C4916	ECEA1CPZ101	E.CAPACITOR 16V 100U	1	
C4917	ECUM1E104ZFN	C.CAPACITOR 25V 0.1U	1	
C4918	ECEA1CPZ101	E.CAPACITOR 16V 100U	1	
C4919	ECUM1E104ZFN	C.CAPACITOR 25V 0.1U	1	

Ref.No.	Part No.	Part Name & Description	Pcs	Remarks
C4920	ECUM1H103ZFN	C.CAPACITOR CH 50V 0.01U	1	
C4921,22	ECEA1CPZ101	E.CAPACITOR 16V 100U	2	
C4923	ECUM1E104ZFN	C.CAPACITOR 25V 0.1U	1	
C4924	ECEA1CPZ101	E.CAPACITOR 16V 100U	1	
C4925	ECUM1E104ZFN	C.CAPACITOR 25V 0.1U	1	
C4926	ECUM1H103ZFN	C.CAPACITOR CH 50V 0.01U	1	
C4927	ECEA1CPZ101	E.CAPACITOR 16V 100U	1	
C4928	ECUM1E104ZFN	C.CAPACITOR 25V 0.1U	1	
C4929	ECEA1APZ101	E.CAPACITOR 10V 100U	1	
C4930	ECUM1E104ZFN	C.CAPACITOR 25V 0.1U	1	
C4931,32	ECEA1APZ101	E.CAPACITOR 10V 100U	2	
C4933-36	ECUM1E104ZFN	C.CAPACITOR 25V 0.1U	4	
C4937	ECUM1H101JCN	C.CAPACITOR CH 50V 100P	1	
C4938-40	ECUM1E104ZFN	C.CAPACITOR 25V 0.1U	3	
C4941	ECEA0JPZ221	E.CAPACITOR 6.3V 220U	1	
C4942-45	ECUM1H151JCN	C.CAPACITOR CH 50V 150P	4	
C4946,47	ECUM1H470JCN	C.CAPACITOR CH 50V 47P	2	
C4948,49	ECUM1H330JCN	C.CAPACITOR CH 50V 33P	2	
C4950,51	ECUM1H470JCN	C.CAPACITOR CH 50V 47P	2	
C4952	ECUM1H103ZFN	C.CAPACITOR CH 50V 0.01U	1	
C4953	ECEA1CPZ100	E.CAPACITOR 16V 10U	1	
C4954	ECUM1H103ZFN	C.CAPACITOR CH 50V 0.01U	1	
C4955	ECEA1CPZ100	E.CAPACITOR 16V 10U	1	
C4956,57	ECUM1H471JN	C.CAPACITOR CH 50V 470P	2	
C4958,59	ECUM1H103ZFN	C.CAPACITOR CH 50V 0.01U	2	
C4960	ECUM1H222KBN	C.CAPACITOR CH 50V 2200P	1	
C4961,62	ECUM1H330JCN	C.CAPACITOR CH 50V 33P	2	
C4963	ECUM1H222KBN	C.CAPACITOR CH 50V 2200P	1	
C4964,65	ECUM1H103ZFN	C.CAPACITOR CH 50V 0.01U	2	
C4966	ECUM1H120JCN	C.CAPACITOR CH 50V 12P	1	
C4967,68	ECUM1H103ZFN	C.CAPACITOR CH 50V 0.01U	2	
C4969,70	ECUM1H680JCN	C.CAPACITOR CH 50V 68P	2	
C4971,72	ECUM1H103ZFN	C.CAPACITOR CH 50V 0.01U	2	
C4973	ECHS1H472GZ	P.CAPACITOR 50V 4700P	1	
C4974	ECEA1CBZ330	E.CAPACITOR 16V 33U	1	
C4975	ECEA1CPZ101	E.CAPACITOR 16V 100U	1	
C4976	ECUM1E104ZFN	C.CAPACITOR 25V 0.1U	1	
C4977	ECEA1CPZ101	E.CAPACITOR 16V 100U	1	
C4978	ECUM1E104ZFN	C.CAPACITOR 25V 0.1U	1	
C4980	ECUM1E104ZFN	C.CAPACITOR 25V 0.1U	1	
C4991,92	ECCF1H150JC	C.CAPACITOR 50V 15P	2	
D4001	1SZ53	DIODE	1	
D4002	MA3160-M	DIODE	1	
D4003	MA157	DIODE	1	
D4011-14	MA3160-M	DIODE	4	
D4015	MA151K	DIODE	1	
D4301-04	MA151K	DIODE	4	
D4601-06	MA151K	DIODE	6	
FL4001	VLF0904	FILTER	1	
IC4001	74F821SC	IC	1	
IC4002	HA19505	IC	1	
IC4003	AN78N05	IC	1	
IC4004	MC10125L	IC	1	
IC4005	NE5539D	IC	1	
IC4006	AN78N09	IC	1	
IC4007	AN79N09	IC	1	
IC4008	MM74HC221AM	IC	1	
IC4009	NJM084M	IC	1	
IC4010	NE5539D	IC	1	
IC4011	AN79L05	IC	1	
IC4012,13	AD9300KQ	IC	2	
IC4014	NJM082BM	IC	1	
IC4015	MC74HC4052F	IC	1	
IC4016	AN78N05	IC	1	
IC4017	AN79L05	IC	1	
IC4201	MC74HC04AF	IC	1	

Ref.No.	Part No.	Part Name & Description	Pcs	Remarks
IC4202	MC74HC139AF	IC	1	
IC4203	UPD71055GB	IC	1	
IC4204	MC74HC573AF	IC	1	
IC4205	MC74HC138AF	IC	1	
IC4206	UPD71055GB	IC	1	
IC4207	TC74HC123AF	IC	1	
IC4208	MC74HC32AF	IC	1	
IC4211	MC10125L	IC	1	
IC4212	MC74HC86F	IC	1	
IC4213	SN74HCT541N	IC	1	
IC4214	SN74LS541NS	IC	1	
IC4215	MC74HC157AF	IC	1	
IC4216	MC74HC04AF	IC	1	
IC4217	SN74ALS157AL	IC	1	
IC4301	NJM5532MD	IC	1	
IC4302	AD7535JN	IC	1	
IC4303-07	NJM5532MD	IC	5	
IC4308	AK5326	IC	1	
IC4309	MN53040VPQ	IC	1	
IC4310	AN78N12	IC	1	
IC4311	AN78N05	IC	1	
IC4312	AN79N05	IC	1	
IC4313	NJM5532MD	IC	1	
IC4314	AD7535JN	IC	1	
IC4315-19	NJM5532MD	IC	5	
IC4320	AK5326	IC	1	
IC4321	MN53040VPQ	IC	1	
IC4322	AN79N12	IC	1	
IC4331	NJM5532MD	IC	1	
IC4332	AD7535JN	IC	1	
IC4333-37	NJM5532MD	IC	5	
IC4338	AK5326	IC	1	
IC4339	MN53040VPQ	IC	1	
IC4340	AN78N12	IC	1	
IC4341	AN78N05	IC	1	
IC4342	AN79N05	IC	1	
IC4343	NJM5532MD	IC	1	
IC4344	AD7535JN	IC	1	
IC4345-49	NJM5532MD	IC	5	
IC4350	AK5326	IC	1	
IC4351	MN53040VPQ	IC	1	
IC4352	AN79N12	IC	1	
IC4601	AN78N05	IC	1	
IC4602	MN64730	IC	1	
IC4603	MN64731	IC	1	
IC4604-08	NJM5532MD	IC	5	
IC4609	AN78N12	IC	1	
IC4610	AN79N12	IC	1	
IC4611	AN78N05	IC	1	
IC4612	MN64731	IC	1	
IC4613-17	NJM5532MD	IC	5	
IC4621	AN78N05	IC	1	
IC4622	MN64730	IC	1	
IC4623	MN64731	IC	1	
IC4624-28	NJM5532MD	IC	5	
IC4629	AN78N12	IC	1	
IC4630	AN79N12	IC	1	
IC4631	AN78N05	IC	1	
IC4632	MN64731	IC	1	
IC4633-37	NJM5532MD	IC	5	
IC4641	AN78N05	IC	1	
IC4642	MN64730	IC	1	
IC4643	MN64731	IC	1	
IC4644-48	NJM5532MD	IC	5	
IC4649	AN78N12	IC	1	
IC4650	AN79N12	IC	1	
IC4651	AN78N05	IC	1	
IC4652	MN64731	IC	1	
IC4653-57	NJM5532MD	IC	5	
L4001-03	VLQEL05S220K	COIL 22UH	3	
L4004	VLQEL05S821J	COIL 820UH	1	
L4005,06	VLQEL05S220K	COIL 22UH	2	

Ref.No.	Part No.	Part Name & Description	Pcs	Remarks
L4011-16	VLQEL05S220K	COIL 22UH	6	
L4017	VLQEL05S680J	COIL 68UH	1	
L4018,19	VLQEL05S220K	COIL 22UH	2	
L4201	EIV7EN142Q	COIL 1400UH	1	
L4301-08	VLQEL05S220K	COIL 22UH	8	
L4311-18	VLQEL05S220K	COIL 22UH	8	
L4601-06	EIV7EN141Q	COIL 140UH	6	
P001,02	VJP3151	CONNECTOR (MALE)	2	
Q4001	2SB709-R	TRANSISTOR	1	
Q4002,03	2SD636	TRANSISTOR	2	
Q4004	2SD601-R	TRANSISTOR	1	
Q4005	2SB793-R	TRANSISTOR	1	
Q4006	2SK198-Q	TRANSISTOR	1	
Q4007,08	2SD601-R	TRANSISTOR	2	
Q4011	2SB709-R	TRANSISTOR	1	
Q4012,13	2SC2188	TRANSISTOR	2	
Q4014	2SB709-R	TRANSISTOR	1	
Q4015,16	2SC2188	TRANSISTOR	2	
Q4017	2SB709-R	TRANSISTOR	1	
Q4018,19	2SC2188	TRANSISTOR	2	
Q4021	2SB709-R	TRANSISTOR	1	
Q4022,23	2SC2188	TRANSISTOR	2	
Q4024	2SD601-R	TRANSISTOR	1	
Q4301	UN2213	TRANSISTOR	1	
Q4302	2SD601-R	TRANSISTOR	1	
Q4303	UN2213	TRANSISTOR	1	
Q4304	2SD601-R	TRANSISTOR	1	
Q4305	UN2213	TRANSISTOR	1	
Q4306	2SD601-R	TRANSISTOR	1	
Q4307	UN2213	TRANSISTOR	1	
Q4308	2SD601-R	TRANSISTOR	1	
Q4601	2SD601-R	TRANSISTOR	1	
Q4602	UN2213	TRANSISTOR	1	
Q4603	2SD601-R	TRANSISTOR	1	
Q4604	UN2213	TRANSISTOR	1	
Q4611	2SD601-R	TRANSISTOR	1	
Q4612	UN2213	TRANSISTOR	1	
Q4613	2SD601-R	TRANSISTOR	1	
Q4614	UN2213	TRANSISTOR	1	
Q4621	2SD601-R	TRANSISTOR	1	
Q4622	UN2213	TRANSISTOR	1	
Q4623	2SD601-R	TRANSISTOR	1	
Q4624	UN2213	TRANSISTOR	1	
		RESISTORS		
R4001-10	ERJ6GEYJ101	M.RESISTOR CH1/10W 100	10	
R4011,12	ERJ6GEY0R00	C.RESISTOR 1/10W 0	2	
R4013	ERJ6GEYJ271	M.RESISTOR CH1/10W 270	1	
R4014,15	ERJ6GEYJ272	M.RESISTOR CH1/10W 2.7K	2	
R4016	ERJ6GEYG153	M.RESISTOR CH1/10W 15K	1	
R4017	ERJ6GEYJ102	M.RESISTOR CH1/10W 1K	1	
R4018	ERJ6GEYJ221	M.RESISTOR CH1/10W 220	1	
R4019	ERJ6GEYJ392	M.RESISTOR CH1/10W 3.9K	1	
R4020	ERJ6GEYJ221	M.RESISTOR CH1/10W 220	1	
R4021,22	VRE0034E750	M.RESISTOR CH 1/10W 75	2	
R4023	ERJ6GEYJ122	M.RESISTOR CH1/10W 1.2K	1	
R4024	ERJ6GEYJ102	M.RESISTOR CH1/10W 1K	1	
R4025	ERJ6GEYJ271	M.RESISTOR CH1/10W 270	1	
R4026	ERJ6GEYJ222	M.RESISTOR CH1/10W 2.2K	1	
R4027	ERJ6GEYJ390	M.RESISTOR CH1/10W 39	1	
R4028,29	ERJ6GEYJ100	M.RESISTOR CH1/10W 10	2	
R4030,31	ERJ6GEYJ102	M.RESISTOR CH1/10W 1K	2	
R4032	ERJ6GEYJ101	M.RESISTOR CH1/10W 100	1	
R4033,34	ERJ6GEYJ105	M.RESISTOR CH1/10W 1M	2	
R4035	ERJ6GEYG181	M.RESISTOR CH1/10W 180	1	
R4036,37	ERJ6GEYJ103	M.RESISTOR CH1/10W 10K	2	
R4038	ERJ6GEYJ102	M.RESISTOR CH1/10W 1K	1	

Ref.No.	Part No.	Part Name & Description	Pcs	Remarks
R4039	ERJ6GEYJ222	M.RESISTOR CH1/10W 2.2K	1	
R4040	ERJ6GEYF472	M.RESISTOR CH1/10W 4.7K	1	
R4041	ERJ6GEYJ103	M.RESISTOR CH1/10W 10K	1	
R4042	ERJ6GEYJ222	M.RESISTOR CH1/10W 2.2K	1	
R4043,44	ERJ6GEYJ561	M.RESISTOR CH1/10W 560	2	
R4045	ERJ6GEYJ222	M.RESISTOR CH1/10W 2.2K	1	
R4046	ERJ6GEYJ101	M.RESISTOR CH1/10W 100	1	
R4047	ERJ6GEYJ561	M.RESISTOR CH1/10W 560	1	
R4048	ERJ6GEYJ471	M.RESISTOR CH1/10W 470	1	
R4049,50	ERJ6GEYJ102	M.RESISTOR CH1/10W 1K	2	
R4051	ERJ6GEYJ101	M.RESISTOR CH1/10W 100	1	
R4052	ERJ6GEYJ562	M.RESISTOR CH1/10W 5.6K	1	
R4053	ERJ6GEYJ223	M.RESISTOR CH1/10W 22K	1	
R4054	ERJ6GEYF472	M.RESISTOR CH1/10W 4.7K	1	
R4055,56	ERJ6GEYJ100	M.RESISTOR CH1/10W 10	2	
R4061	ERJ6GEYJ221	M.RESISTOR CH1/10W 220	1	
R4062	ERJ6GEYJ222	M.RESISTOR CH1/10W 2.2K	1	
R4063	ERJ6GEY0R00	C.RESISTOR 1/10W 0	1	
R4064	ERJ6GEYJ221	M.RESISTOR CH1/10W 220	1	
R4065	ERJ6GEYJ392	M.RESISTOR CH1/10W 3.9K	1	
R4066	ERJ6GEYJ221	M.RESISTOR CH1/10W 220	1	
R4067	VRE0034E750	M.RESISTOR CH 1/10W 75	1	
R4068	ERJ6GEYJ271	M.RESISTOR CH1/10W 270	1	
R4069	ERJ6GEYJ222	M.RESISTOR CH1/10W 2.2K	1	
R4070	ERJ6GEY0R00	C.RESISTOR 1/10W 0	1	
R4071	ERJ6GEYJ221	M.RESISTOR CH1/10W 220	1	
R4072	ERJ6GEYJ392	M.RESISTOR CH1/10W 3.9K	1	
R4073	ERJ6GEYJ221	M.RESISTOR CH1/10W 220	1	
R4074	VRE0034E750	M.RESISTOR CH 1/10W 75	1	
R4075	ERJ6GEYJ100	M.RESISTOR CH1/10W 10	1	
R4076	ERJ6GEYJ222	M.RESISTOR CH1/10W 2.2K	1	
R4077	ERJ6GEYJ221	M.RESISTOR CH1/10W 220	1	
R4078	ERJ6GEY0R00	C.RESISTOR 1/10W 0	1	
R4079	ERJ6GEYJ221	M.RESISTOR CH1/10W 220	1	
R4080	ERJ6GEYJ392	M.RESISTOR CH1/10W 3.9K	1	
R4081	ERJ6GEYJ221	M.RESISTOR CH1/10W 220	1	
R4082	VRE0034E750	M.RESISTOR CH 1/10W 75	1	
R4083	ERJ6GEYJ100	M.RESISTOR CH1/10W 10	1	
R4084-86	ERJ6GEYJ102	M.RESISTOR CH1/10W 1K	3	
R4087	ERJ6GEYJ561	M.RESISTOR CH1/10W 560	1	
R4088	ERJ6GEYJ221	M.RESISTOR CH1/10W 220	1	
R4089	ERJ6GEYJ222	M.RESISTOR CH1/10W 2.2K	1	
R4090	ERJ6GEY0R00	C.RESISTOR 1/10W 0	1	
R4091	ERJ6GEYJ221	M.RESISTOR CH1/10W 220	1	
R4092	ERJ6GEYJ392	M.RESISTOR CH1/10W 3.9K	1	
R4093	ERJ6GEYJ221	M.RESISTOR CH1/10W 220	1	
R4094,95	VRE0034E750	M.RESISTOR CH 1/10W 75	2	
R4096	ERJ6GEYG153	M.RESISTOR CH1/10W 15K	1	
R4097-00	ERJ6GEYJ272	M.RESISTOR CH1/10W 2.7K	4	
R4101-04	ERJ6GEYJ223	M.RESISTOR CH1/10W 22K	4	
R4105	ERJ6GEYJ563	M.RESISTOR CH1/10W 56K	1	
R4106	ERJ6GEYF124	M.RESISTOR CH1/10W 120K	1	
R4107	VRE0034E622	M.RESISTOR CH 1/10W 6.2K	1	
R4111	EROS2CHF2201	M.RESISTOR 1/4W 2.2K	1	
R4201-13	ERJ6GEYJ103	M.RESISTOR CH1/10W 10K	13	
R4214	ERJ6GEYJ104	M.RESISTOR CH1/10W 100K	1	
R4221	ERJ6GEYJ101	M.RESISTOR CH1/10W 100	1	
R4222	ERJ6GEYJ102	M.RESISTOR CH1/10W 1K	1	
R4223,24	ERJ6GEYJ101	M.RESISTOR CH1/10W 100	2	
R4225	ERJ6GEY0R00	C.RESISTOR 1/10W 0	1	
R4226	ERJ6GEYJ824	M.RESISTOR CH1/10W 820K	1	
R4301-04	VRE0034E472	M.RESISTOR CH 1/10W 4.7K	4	
R4305	ERJ6GEYJ222	M.RESISTOR CH1/10W 2.2K	1	
R4306	ERJ6GEYJ392	M.RESISTOR CH1/10W 3.9K	1	
R4307	ERJ6GEYJ473	M.RESISTOR CH1/10W 47K	1	
R4308	ERJ6GEYJ102	M.RESISTOR CH1/10W 1K	1	
R4309	VRE0034E101	M.RESISTOR CH 1/10W 100	1	
R4310,11	ERJ6GEYJ103	M.RESISTOR CH1/10W 10K	2	
R4312	VRE0034E123	M.RESISTOR CH 1/10W 12K	1	
R4313	VRE0034E222	M.RESISTOR CH 1/10W 2.2K	1	
R4314	VRE0034E102	M.RESISTOR CH 1/10W 1K	1	
R4315	ERJ6GEYJ105	M.RESISTOR CH1/10W 1M	1	
R4316	VRE0034E223	M.RESISTOR CH 1/10W 22K	1	
R4317,18	ERJ6GEYJ103	M.RESISTOR CH1/10W 10K	2	
R4319	VRE0034E752	M.RESISTOR CH 1/10W 7.5K	1	

Ref.No.	Part No.	Part Name & Description	Pcs	Remarks
R4320	ERJ6GEYJ105	M.RESISTOR CH1/10W 1M	1	
R4321	VRE0034E104	M.RESISTOR CH 1/10W 100K	1	
R4322	ERJ6GEYJ101	M.RESISTOR CH1/10W 100	1	
R4323,24	VRE0034E152	M.RESISTOR CH 1/10W 1.5K	2	
R4325,26	VRE0034E222	M.RESISTOR CH 1/10W 2.2K	2	
R4327-32	VRE0034E472	M.RESISTOR CH 1/10W 4.7K	6	
R4333	VRE0034E512	M.RESISTOR CH 1/10W 5.1K	1	
R4334	ERJ6GEYJ103	M.RESISTOR CH1/10W 10K	1	
R4335,36	ERJ6GEYJ105	M.RESISTOR CH1/10W 1M	2	
R4337,38	ERJ6GEYJ101	M.RESISTOR CH1/10W 100	2	
R4339-42	VRE0034E510	M.RESISTOR CH 1/10W 51	4	
R4343	ERJ6GEYJ100	M.RESISTOR CH1/10W 10	1	
R4345	VRE0034E302	M.RESISTOR CH 1/10W 3K	1	
R4351-54	VRE0034E472	M.RESISTOR CH 1/10W 4.7K	4	
R4355	ERJ6GEYJ222	M.RESISTOR CH1/10W 2.2K	1	
R4356	ERJ6GEYJ392	M.RESISTOR CH1/10W 3.9K	1	
R4357	ERJ6GEYJ473	M.RESISTOR CH1/10W 47K	1	
R4358	ERJ6GEYJ102	M.RESISTOR CH1/10W 1K	1	
R4359	VRE0034E101	M.RESISTOR CH 1/10W 100	1	
R4360,61	ERJ6GEYJ103	M.RESISTOR CH1/10W 10K	2	
R4362	VRE0034E123	M.RESISTOR CH 1/10W 12K	1	
R4363	VRE0034E222	M.RESISTOR CH 1/10W 2.2K	1	
R4364	VRE0034E102	M.RESISTOR CH 1/10W 1K	1	
R4365	ERJ6GEYJ105	M.RESISTOR CH1/10W 1M	1	
R4366	VRE0034E223	M.RESISTOR CH 1/10W 22K	1	
R4367,68	ERJ6GEYJ103	M.RESISTOR CH1/10W 10K	2	
R4369	VRE0034E752	M.RESISTOR CH 1/10W 7.5K	1	
R4370	ERJ6GEYJ105	M.RESISTOR CH1/10W 1M	1	
R4371	VRE0034E104	M.RESISTOR CH 1/10W 100K	1	
R4372	ERJ6GEYJ101	M.RESISTOR CH1/10W 100	1	
R4373,74	VRE0034E152	M.RESISTOR CH 1/10W 1.5K	2	
R4375,76	VRE0034E222	M.RESISTOR CH 1/10W 2.2K	2	
R4377-82	VRE0034E472	M.RESISTOR CH 1/10W 4.7K	6	
R4383	VRE0034E512	M.RESISTOR CH 1/10W 5.1K	1	
R4384	ERJ6GEYJ103	M.RESISTOR CH1/10W 10K	1	
R4385,86	ERJ6GEYJ105	M.RESISTOR CH1/10W 1M	2	
R4387,88	ERJ6GEYJ101	M.RESISTOR CH1/10W 100	2	
R4389-92	VRE0034E510	M.RESISTOR CH 1/10W 51	4	
R4393	ERJ6GEYJ100	M.RESISTOR CH1/10W 10	1	
R4395	VRE0034E302	M.RESISTOR CH 1/10W 3K	1	
R4401-04	VRE0034E472	M.RESISTOR CH 1/10W 4.7K	4	
R4405	ERJ6GEYJ222	M.RESISTOR CH1/10W 2.2K	1	
R4406	ERJ6GEYJ392	M.RESISTOR CH1/10W 3.9K	1	
R4407	ERJ6GEYJ473	M.RESISTOR CH1/10W 47K	1	
R4408	ERJ6GEYJ102	M.RESISTOR CH1/10W 1K	1	
R4409	VRE0034E101	M.RESISTOR CH 1/10W 100	1	
R4410,11	ERJ6GEYJ103	M.RESISTOR CH1/10W 10K	2	
R4412	VRE0034E123	M.RESISTOR CH 1/10W 12K	1	
R4413	VRE0034E222	M.RESISTOR CH 1/10W 2.2K	1	
R4414	VRE0034E102	M.RESISTOR CH 1/10W 1K	1	
R4415	ERJ6GEYJ105	M.RESISTOR CH1/10W 1M	1	
R4416	VRE0034E223	M.RESISTOR CH 1/10W 22K	1	
R4417,18	ERJ6GEYJ103	M.RESISTOR CH1/10W 10K	2	
R4419	VRE0034E752	M.RESISTOR CH 1/10W 7.5K	1	
R4420	ERJ6GEYJ105	M.RESISTOR CH1/10W 1M	1	
R4421	VRE0034E104	M.RESISTOR CH 1/10W 100K	1	
R4422	ERJ6GEYJ101	M.RESISTOR CH1/10W 100	1	
R4423,24	VRE0034E152	M.RESISTOR CH 1/10W 1.5K	2	
R4425,26	VRE0034E222	M.RESISTOR CH 1/10W 2.2K	2	
R4427-32	VRE0034E472	M.RESISTOR CH 1/10W 4.7K	6	
R4433	VRE0034E512	M.RESISTOR CH 1/10W 5.1K	1	
R4434	ERJ6GEYJ103	M.RESISTOR CH1/10W 10K	1	
R4435,36	ERJ6GEYJ105	M.RESISTOR CH1/10W 1M	2	
R4437,38	ERJ6GEYJ101	M.RESISTOR CH1/10W 100	2	
R4439-42	VRE0034E510	M.RESISTOR CH 1/10W 51	4	
R4443	ERJ6GEYJ100	M.RESISTOR CH1/10W 10	1	
R4445	VRE0034E302	M.RESISTOR CH 1/10W 3K	1	
R4451-54	VRE0034E472	M.RESISTOR CH 1/10W 4.7K	4	
R4455	ERJ6GEYJ222	M.RESISTOR CH1/10W 2.2K	1	
R4456	ERJ6GEYJ392	M.RESISTOR CH1/10W 3.9K	1	
R4457	ERJ6GEYJ473	M.RESISTOR CH1/10W 47K	1	
R4458	ERJ6GEYJ102	M.RESISTOR CH1/10W 1K	1	
R4459	VRE0034E101	M.RESISTOR CH 1/10W 100	1	
R4460,61	ERJ6GEYJ103	M.RESISTOR CH1/10W 10K	2	
R4462	VRE0034E123	M.RESISTOR CH 1/10W 12K	1	

Ref.No.	Part No.	Part Name & Description	Pcs	Remarks
R4463	VRE0034E222	M.RESISTOR CH 1/10W 2.2K	1	
R4464	VRE0034E102	M.RESISTOR CH 1/10W 1K	1	
R4465	ERJ6GEYJ105	M.RESISTOR CH1/10W 1M	1	
R4466	VRE0034E223	M.RESISTOR CH 1/10W 22K	1	
R4467,68	ERJ6GEYJ103	M.RESISTOR CH1/10W 10K	2	
R4469	VRE0034E752	M.RESISTOR CH 1/10W 7.5K	1	
R4470	ERJ6GEYJ105	M.RESISTOR CH1/10W 1M	1	
R4471	VRE0034E104	M.RESISTOR CH 1/10W 100K	1	
R4472	ERJ6GEYJ101	M.RESISTOR CH1/10W 100	1	
R4473,74	VRE0034E152	M.RESISTOR CH 1/10W 1.5K	2	
R4475,76	VRE0034E222	M.RESISTOR CH 1/10W 2.2K	2	
R4477-82	VRE0034E472	M.RESISTOR CH 1/10W 4.7K	6	
R4483	VRE0034E512	M.RESISTOR CH 1/10W 5.1K	1	
R4484	ERJ6GEYJ103	M.RESISTOR CH1/10W 10K	1	
R4485,86	ERJ6GEYJ105	M.RESISTOR CH1/10W 1M	2	
R4487,88	ERJ6GEYJ101	M.RESISTOR CH1/10W 100	2	
R4489-92	VRE0034E510	M.RESISTOR CH 1/10W 51	4	
R4493	ERJ6GEYJ100	M.RESISTOR CH1/10W 10	1	
R4495	VRE0034E302	M.RESISTOR CH 1/10W 3K	1	
R4501,02	ERJ6GEY0R00	C.RESISTOR 1/10W 0	2	
R4601,02	ERDS2TJ100	C.RESISTOR 1/4W 10	2	
R4603	ERDS2TJ2R2	C.RESISTOR 1/4W 2.2	1	
R4604-07	ERJ6GEYJ102	M.RESISTOR CH1/10W 1K	4	
R4608-11	VRE0034E333	M.RESISTOR CH 1/10W 33K	4	
R4612-15	VRE0034E223	M.RESISTOR CH 1/10W 22K	4	
R4616-19	VRE0034E473	M.RESISTOR CH 1/10W 47K	4	
R4620,21	VRE0034E822	M.RESISTOR CH 1/10W 8.2K	2	
R4622,23	VRE0034E222	M.RESISTOR CH 1/10W 2.2K	2	
R4624,25	VRE0034E182	M.RESISTOR CH 1/10W 1.8K	2	
R4626	VRE0034E272	M.RESISTOR CH 1/10W 2.7K	1	
R4627,28	VRE0034E222	M.RESISTOR CH 1/10W 2.2K	2	
R4629,30	VRE0034E472	M.RESISTOR CH 1/10W 4.7K	2	
R4631,32	VRE0034E102	M.RESISTOR CH 1/10W 1K	2	
R4633,34	VRE0034E103	M.RESISTOR CH 1/10W 10K	2	
R4635-37	VRE0034E223	M.RESISTOR CH 1/10W 22K	3	
R4638	VRE0034E222	M.RESISTOR CH 1/10W 2.2K	1	
R4639	ERJ6GEYJ105	M.RESISTOR CH1/10W 1M	1	
R4640	ERJ6GEYF472	M.RESISTOR CH1/10W 4.7K	1	
R4641-43	ERJ6GEYJ103	M.RESISTOR CH1/10W 10K	3	
R4644,45	ERDS2TJ150	C.RESISTOR 1/4W 15	2	
R4646,47	ERDS2TJ100	C.RESISTOR 1/4W 10	2	
R4648	ERJ6GEYJ102	M.RESISTOR CH1/10W 1K	1	
R4649-52	VRE0034E333	M.RESISTOR CH 1/10W 33K	4	
R4653-56	VRE0034E223	M.RESISTOR CH 1/10W 22K	4	
R4657-60	VRE0034E473	M.RESISTOR CH 1/10W 47K	4	
R4661,62	VRE0034E822	M.RESISTOR CH 1/10W 8.2K	2	
R4663,64	VRE0034E222	M.RESISTOR CH 1/10W 2.2K	2	
R4665,66	VRE0034E182	M.RESISTOR CH 1/10W 1.8K	2	
R4667	VRE0034E272	M.RESISTOR CH 1/10W 2.7K	1	
R4668,69	VRE0034E222	M.RESISTOR CH 1/10W 2.2K	2	
R4670,71	VRE0034E472	M.RESISTOR CH 1/10W 4.7K	2	
R4672,73	VRE0034E102	M.RESISTOR CH 1/10W 1K	2	
R4674,75	VRE0034E103	M.RESISTOR CH 1/10W 10K	2	
R4676-78	VRE0034E223	M.RESISTOR CH 1/10W 22K	3	
R4679	VRE0034E222	M.RESISTOR CH 1/10W 2.2K	1	
R4680	ERJ6GEYJ105	M.RESISTOR CH1/10W 1M	1	
R4681	ERJ6GEYF472	M.RESISTOR CH1/10W 4.7K	1	
R4682-84	ERJ6GEYJ103	M.RESISTOR CH1/10W 10K	3	
R4686,87	ERDS2TJ150	C.RESISTOR 1/4W 15	2	
R4691,92	VRE0034E123	M.RESISTOR CH 1/10W 12K	2	
R4693,94	VRE0034E102	M.RESISTOR CH 1/10W 1K	2	
R4695	ERJ6GEYJ221	M.RESISTOR CH1/10W 220	1	
R4696	ERJ6GEYJ102	M.RESISTOR CH1/10W 1K	1	
R4698	ERJ6GEY0R00	C.RESISTOR 1/10W 0	1	
R4701,02	ERDS2TJ100	C.RESISTOR 1/4W 10	2	
R4703	ERDS2TJ2R2	C.RESISTOR 1/4W 2.2	1	
R4704-07	ERJ6GEYJ102	M.RESISTOR CH1/10W 1K	4	
R4708-11	VRE0034E333	M.RESISTOR CH 1/10W 33K	4	
R4712-15	VRE0034E223	M.RESISTOR CH 1/10W 22K	4	
R4716-19	VRE0034E473	M.RESISTOR CH 1/10W 47K	4	
R4720,21	VRE0034E822	M.RESISTOR CH 1/10W 8.2K	2	
R4722,23	VRE0034E222	M.RESISTOR CH 1/10W 2.2K	2	
R4724,25	VRE0034E182	M.RESISTOR CH 1/10W 1.8K	2	
R4726	VRE0034E272	M.RESISTOR CH 1/10W 2.7K	1	
R4727,28	VRE0034E222	M.RESISTOR CH 1/10W 2.2K	2	

Ref.No.	Part No.	Part Name & Description	Pcs	Remarks
R4729,30	VRE0034E472	M.RESISTOR CH 1/10W 4.7K	2	
R4731,32	VRE0034E102	M.RESISTOR CH 1/10W 1K	2	
R4733,34	VRE0034E103	M.RESISTOR CH 1/10W 10K	2	
R4735-37	VRE0034E223	M.RESISTOR CH 1/10W 22K	3	
R4738	VRE0034E222	M.RESISTOR CH 1/10W 2.2K	1	
R4739	ERJ6GEYJ105	M.RESISTOR CH1/10W 1M	1	
R4740	ERJ6GEYF472	M.RESISTOR CH1/10W 4.7K	1	
R4741-43	ERJ6GEYJ103	M.RESISTOR CH1/10W 10K	3	
R4744,45	ERDS2TJ150	C.RESISTOR 1/4W 15	2	
R4746,47	ERDS2TJ100	C.RESISTOR 1/4W 10	2	
R4748	ERJ6GEYJ102	M.RESISTOR CH1/10W 1K	1	
R4749-52	VRE0034E333	M.RESISTOR CH 1/10W 33K	4	
R4753-56	VRE0034E223	M.RESISTOR CH 1/10W 22K	4	
R4757-60	VRE0034E473	M.RESISTOR CH 1/10W 47K	4	
R4761,62	VRE0034E822	M.RESISTOR CH 1/10W 8.2K	2	
R4763,64	VRE0034E222	M.RESISTOR CH 1/10W 2.2K	2	
R4765,66	VRE0034E182	M.RESISTOR CH 1/10W 1.8K	2	
R4767	VRE0034E272	M.RESISTOR CH 1/10W 2.7K	1	
R4768,69	VRE0034E222	M.RESISTOR CH 1/10W 2.2K	2	
R4770,71	VRE0034E472	M.RESISTOR CH 1/10W 4.7K	2	
R4772,73	VRE0034E102	M.RESISTOR CH 1/10W 1K	2	
R4774,75	VRE0034E103	M.RESISTOR CH 1/10W 10K	2	
R4776-78	VRE0034E223	M.RESISTOR CH 1/10W 22K	3	
R4779	VRE0034E222	M.RESISTOR CH 1/10W 2.2K	1	
R4780	ERJ6GEYJ105	M.RESISTOR CH1/10W 1M	1	
R4781	ERJ6GEYF472	M.RESISTOR CH1/10W 4.7K	1	
R4782-84	ERJ6GEYJ103	M.RESISTOR CH1/10W 10K	3	
R4786,87	ERDS2TJ150	C.RESISTOR 1/4W 15	2	
R4791,92	VRE0034E123	M.RESISTOR CH 1/10W 12K	2	
R4793,94	VRE0034E102	M.RESISTOR CH 1/10W 1K	2	
R4795	ERJ6GEYJ221	M.RESISTOR CH1/10W 220	1	
R4798	ERJ6GEY0R00	C.RESISTOR 1/10W 0	1	
R4801,02	ERDS2TJ100	C.RESISTOR 1/4W 10	2	
R4803	ERDS2TJ2R2	C.RESISTOR 1/4W 2.2	1	
R4804-07	ERJ6GEYJ102	M.RESISTOR CH1/10W 1K	4	
R4808-11	VRE0034E333	M.RESISTOR CH 1/10W 33K	4	
R4812-15	VRE0034E223	M.RESISTOR CH 1/10W 22K	4	
R4816-19	VRE0034E473	M.RESISTOR CH 1/10W 47K	4	
R4820,21	VRE0034E822	M.RESISTOR CH 1/10W 8.2K	2	
R4822,23	VRE0034E222	M.RESISTOR CH 1/10W 2.2K	2	
R4824,25	VRE0034E182	M.RESISTOR CH 1/10W 1.8K	2	
R4826	VRE0034E272	M.RESISTOR CH 1/10W 2.7K	1	
R4827,28	VRE0034E222	M.RESISTOR CH 1/10W 2.2K	2	
R4829,30	VRE0034E472	M.RESISTOR CH 1/10W 4.7K	2	
R4831,32	VRE0034E102	M.RESISTOR CH 1/10W 1K	2	
R4833,34	VRE0034E103	M.RESISTOR CH 1/10W 10K	2	
R4835-37	VRE0034E223	M.RESISTOR CH 1/10W 22K	3	
R4838	VRE0034E222	M.RESISTOR CH 1/10W 2.2K	1	
R4839	ERJ6GEYJ105	M.RESISTOR CH1/10W 1M	1	
R4840	ERJ6GEYF472	M.RESISTOR CH1/10W 4.7K	1	
R4841-43	ERJ6GEYJ103	M.RESISTOR CH1/10W 10K	3	
R4844,45	ERDS2TJ150	C.RESISTOR 1/4W 15	2	
R4846,47	ERDS2TJ100	C.RESISTOR 1/4W 10	2	
R4848	ERJ6GEYJ102	M.RESISTOR CH1/10W 1K	1	
R4849-52	VRE0034E333	M.RESISTOR CH 1/10W 33K	4	
R4853-56	VRE0034E223	M.RESISTOR CH 1/10W 22K	4	
R4857-60	VRE0034E473	M.RESISTOR CH 1/10W 47K	4	
R4861,62	VRE0034E822	M.RESISTOR CH 1/10W 8.2K	2	
R4863,64	VRE0034E222	M.RESISTOR CH 1/10W 2.2K	2	
R4865,66	VRE0034E182	M.RESISTOR CH 1/10W 1.8K	2	
R4867	VRE0034E272	M.RESISTOR CH 1/10W 2.7K	1	
R4868,69	VRE0034E222	M.RESISTOR CH 1/10W 2.2K	2	
R4870,71	VRE0034E472	M.RESISTOR CH 1/10W 4.7K	2	
R4872,73	VRE0034E102	M.RESISTOR CH 1/10W 1K	2	
R4874,75	VRE0034E103	M.RESISTOR CH 1/10W 10K	2	
R4876-78	VRE0034E223	M.RESISTOR CH 1/10W 22K	3	
R4879	VRE0034E222	M.RESISTOR CH 1/10W 2.2K	1	
R4880	ERJ6GEYJ105	M.RESISTOR CH1/10W 1M	1	
R4881	ERJ6GEYF472	M.RESISTOR CH1/10W 4.7K	1	
R4882-84	ERJ6GEYJ103	M.RESISTOR CH1/10W 10K	3	
R4886,87	ERDS2TJ150	C.RESISTOR 1/4W 15	2	
R4891,92	VRE0034E123	M.RESISTOR CH 1/10W 12K	2	
R4893,94	VRE0034E102	M.RESISTOR CH 1/10W 1K	2	
R4895	ERJ6GEYJ221	M.RESISTOR CH1/10W 220	1	
R4898	ERJ6GEY0R00	C.RESISTOR 1/10W 0	1	

L2 VIDEO/AUDIO REC VEP88072C
L2 SUB VEP88081A

Ref.No.	Part No.	Part Name & Description	Pcs	Remarks
R4901	ERDS2TJ181	C.RESISTOR 1/4W 180	1	
RY4001	VSY2039	RELAY	1	
RY4301-04	VSY2039	RELAY	4	
RY4601-06	VSY2039	RELAY	6	
TH4001	ERTD2FHL802S	THERMISTOR	1	
TP4001-07	VJR0646	TEST POINT	7	
TP4301-06	VJR0646	TEST POINT	6	
TP4311-16	VJR0646	TEST POINT	6	
TP4601-06	VJR0646	TEST POINT	6	
TPG4001,02	VJR0646	TEST POINT	2	
TPG4201	VJR0646	TEST POINT	1	
TPG4301-04	VJR0646	TEST POINT	4	
TPG4601-06	VJR0646	TEST POINT	6	
VR4001	VRV0064B102	V.RESISTOR 1K	1	
VR4002	VRV0109B102	V.RESISTOR 1K	1	
VR4004	VRV0109B502	V.RESISTOR 5K	1	
VR4005	VRV0109B202	V.RESISTOR 2K	1	
VR4006	VRV0109B102	V.RESISTOR 1K	1	
VR4301-04	VRV0109B103	V.RESISTOR 10K	4	
VR4601-06	VRV0109B103	V.RESISTOR 10K	6	
		MISCELLANEOUS		
	VGQ0291	P.C.BOARD NAME PLATE	1	
	VJF0300	BINDER	16	
	VML2143	CARD PULLER	1	
	VML2144	CARD PULLER	1	
	VMP3048	P.C.BOARD HOLDER ANGLE	2	
	VSC3322	SHIELD CASE	1	
	VSC3323	SHIELD CASE	1	
	VSC3324	SHIELD CASE	1	
	VSC3325	SHIELD CASE	1	
	VSC3332	SHIELD CASE	1	
	VSC3333	SHIELD CASE	1	
	VXA4418	P.C.BOARD SHIELD PLATE	1	
	XNG26E	NUT	4	
	XTV3+6FFR	SCREW	9	
	XYN26+C12	SCREW	4	
	VEP88072C	P.C.BOARD W/COMPONENT		
		L2 VIDEO/AUDIO REC		
	VEP88081A	P.C.BOARD W/COMPONENT		FOR VEP88072C
		L2 SUB		
		CAPACITORS		
C2-C5	ECUM1E104ZFN	C.CAPACITOR 25V 0.1U	4	
C6	ECUM1H104ZFN	C.CAPACITOR CH 50V 0.1U	1	
C8001-04	ECA1CXLV101	E.CAPACITOR 16V 100U	4	
C8005	ECUM1E104ZFN	C.CAPACITOR 25V 0.1U	1	
C8101,02	ECUM1E104ZFN	C.CAPACITOR 25V 0.1U	2	
C8103	ECUM1H103KBN	C.CAPACITOR CH 50V 0.01U	1	
C8104-10	ECUM1E104ZFN	C.CAPACITOR 25V 0.1U	7	
C8111,12	ECUM1H821JCN	C.CAPACITOR CH 50V 820P	2	
C8113	ECUM1E104ZFN	C.CAPACITOR 25V 0.1U	1	

Ref.No.	Part No.	Part Name & Description	Pcs	Remarks
C8114	ECKF1H103ZF	C.CAPACITOR 50V 0.01U	1	
C8401	ECCF1H101JC	C.CAPACITOR 50V 100P	1	
C8501-11	ECUM1E104ZFN	C.CAPACITOR 25V 0.1U	11	
C8512-15	ECUM1H102JCN	C.CAPACITOR CH 50V 1000P	4	
C8520	ECCF1H101JC	C.CAPACITOR 50V 100P	1	
C8602	ECUM1E104ZFN	C.CAPACITOR 25V 0.1U	1	
C8604	ECUM1E104ZFN	C.CAPACITOR 25V 0.1U	1	
C8605	ECA1CXS100	E.CAPACITOR 16V 10U	1	
C8606	ECUM1E104ZFN	C.CAPACITOR 25V 0.1U	1	
C8607	ECUM1H150JCN	C.CAPACITOR CH 50V 15P	1	
C8609	ECUM1E104ZFN	C.CAPACITOR 25V 0.1U	1	
C8611	ECUM1E104ZFN	C.CAPACITOR 25V 0.1U	1	
C8612	ECA1CXS100	E.CAPACITOR 16V 10U	1	
C8613	ECUM1E104ZFN	C.CAPACITOR 25V 0.1U	1	
C8614	ECUM1H680JCN	C.CAPACITOR CH 50V 68P	1	
C8616	ECUM1E104ZFN	C.CAPACITOR 25V 0.1U	1	
C8618	ECUM1E104ZFN	C.CAPACITOR 25V 0.1U	1	
C8619	ECA1CXS100	E.CAPACITOR 16V 10U	1	
C8620	ECUM1E104ZFN	C.CAPACITOR 25V 0.1U	1	
C8621	ECUM1H220JCN	C.CAPACITOR CH 50V 22P	1	
C8622	ECUM1E104ZFN	C.CAPACITOR 25V 0.1U	1	
C8623-25	ECA1HXS010	E.CAPACITOR 50V 1U	3	
C8626	ECUM1C104KBN	C.CAPACITOR CH 16V 0.1U	1	
C8627,28	ECUM1H103KBN	C.CAPACITOR CH 50V 0.01U	2	
C8651,52	ECUM1E104ZFN	C.CAPACITOR 25V 0.1U	2	
C8653	ECA1CXLV101	E.CAPACITOR 16V 100U	1	
C8654,55	ECUM1E104ZFN	C.CAPACITOR 25V 0.1U	2	
C8658	ECA1HXNV3R3	E.CAPACITOR 50V 3.3U	1	
C8659,60	ECUM1E104ZFN	C.CAPACITOR 25V 0.1U	2	
C8661	ECA1CXLV101	E.CAPACITOR 16V 100U	1	
C8662,63	ECA1HXS0R1	E.CAPACITOR 50V 0.1U	2	
C8667	ECUM1H470JCN	C.CAPACITOR CH 50V 47P	1	
C8668	ECUM1E104ZFN	C.CAPACITOR 25V 0.1U	1	
C8669	ECA1CXS100	E.CAPACITOR 16V 10U	1	
C8670	ECUM1H470JCN	C.CAPACITOR CH 50V 47P	1	
C8671	ECUM1E104ZFN	C.CAPACITOR 25V 0.1U	1	
C8672	ECA1CXS100	E.CAPACITOR 16V 10U	1	
C8687	ECUM1H180JCN	C.CAPACITOR CH 50V 18P	1	
C8701,02	ECUM1E104ZFN	C.CAPACITOR 25V 0.1U	2	
C8703	ECA1CXLV101	E.CAPACITOR 16V 100U	1	
C8704,05	ECUM1E104ZFN	C.CAPACITOR 25V 0.1U	2	
C8708	ECA1HXNV3R3	E.CAPACITOR 50V 3.3U	1	
C8711	ECUM1H470JCN	C.CAPACITOR CH 50V 47P	1	
C8712	ECUM1E104ZFN	C.CAPACITOR 25V 0.1U	1	
C8713	ECA1CXS100	E.CAPACITOR 16V 10U	1	
C8801,02	ECUM1E104ZFN	C.CAPACITOR 25V 0.1U	2	
C8803	ECA1CXLV101	E.CAPACITOR 16V 100U	1	
C8804,05	ECA1HXS0R1	E.CAPACITOR 50V 0.1U	2	
C8809	ECUM1H470JCN	C.CAPACITOR CH 50V 47P	1	
C8810	ECUM1E104ZFN	C.CAPACITOR 25V 0.1U	1	
C8811	ECA1CXS100	E.CAPACITOR 16V 10U	1	
CN003,04	VJP3151	CONNECTOR (MALE)	2	
D8601,02	MA151K	DIODE	2	
IC1	SLA7160F3M	IC	1	
IC2	SN74AS244NS	IC	1	
IC8001-04	SN74LS541NS	IC	4	
IC8005	MC10H124L	IC	1	
IC8051	MC74HC573AF	IC	1	
IC8052	VSI0788B	IC	1	
IC8053	VSI0799	IC	1	
IC8054	CY7C1363JC	IC	1	
IC8055,56	UPD71055GB	IC	2	
IC8057	MC74HC574AF	IC	1	
IC8058	MC74HC541AF	IC	1	
IC8059	VSI0780B	IC	1	
IC8101,02	MC10125L	IC	2	

Ref.No.	Part No.	Part Name & Description	Pcs	Remarks
IC8103,04	SN74LS399NS	IC	2	
IC8105	SN74LS123NS	IC	1	
IC8106	MC10115L	IC	1	
IC8107	MC10104L	IC	1	
IC8108	MC10116L	IC	1	
IC8109	MC10124L	IC	1	
IC8110	MC10115L	IC	1	
IC8111	MC10125L	IC	1	
IC8112	SN74AS244NS	IC	1	
IC8113	MC10125L	IC	1	
IC8114	VSI0951B	IC	1	
IC8151	VSI0800	IC	1	
IC8152	VSI0953	IC	1	
IC8153	VSI0801A	IC	1	
IC8154	VSI0797	IC	1	
IC8155	SN74LS399NS	IC	1	
IC8157	UPD42101G-3	IC	1	
IC8201,02	SN74LS541NS	IC	2	
IC8203	CY7C1363JC	IC	1	
IC8204	L7A0545	IC	1	
IC8205	ADM50ND	IC	1	
IC8206	SN74AS244NS	IC	1	
IC8207	VSI0787	IC	1	
IC8208-10	SN74LS541NS	IC	3	
IC8211,12	MC74HC574AN	IC	2	
IC8213	SN74AS244NS	IC	1	
IC8251-54	74FCT574ASC	IC	4	
IC8255	K6810ALG7L	IC	1	
IC8256	K6256BLG7L	IC	1	
IC8257	K6810ALG7L	IC	1	
IC8258	K6256BLG7L	IC	1	
IC8259,60	SN74AS244NS	IC	2	
IC8261	ADM50ND	IC	1	
IC8262	UPD65061F032	IC	1	
IC8301-04	74FCT574ASC	IC	4	
IC8305	K6810ALG7L	IC	1	
IC8306	K6256BLG7L	IC	1	
IC8307	K6810ALG7L	IC	1	
IC8308	K6256BLG7L	IC	1	
IC8309,10	SN74AS244NS	IC	2	
IC8311	ADM50ND	IC	1	
IC8312	UPD65061F032	IC	1	
IC8351	VSI0775B	IC	1	
IC8352	VSI0792	IC	1	
IC8353	VSI0791	IC	1	
IC8354,55	IDTFCT825ASO	IC	2	
IC8356	SN74LS399N	IC	1	
IC8357	VSI0777B	IC	1	
IC8358	VSI0776B	IC	1	
IC8359	IDTFCT825AP	IC	1	
IC8360	VSI0778B	IC	1	
IC8361	VSI0786B	IC	1	
IC8362	VSI0778B	IC	1	
IC8401,02	MC74HC541AN	IC	2	
IC8403	MC74HC541AF	IC	1	
IC8404	MC74HC574AN	IC	1	
IC8405	L7A0341	IC	1	
IC8406,07	MC74HC541AN	IC	2	
IC8408	MC74HC541AF	IC	1	
IC8409	MC74HC574AN	IC	1	
IC8410	L7A0341	IC	1	
IC8411,12	IDTFCT825ASO	IC	2	
IC8413	VSI0784B	IC	1	
IC8414	VSI0785	IC	1	
IC8415-17	SN74LS541NS	IC	3	
IC8451	VSI0781	IC	1	
IC8452,53	MC74HC86F	IC	2	
IC8454	VSI0783	IC	1	
IC8455	VSI0793	IC	1	
IC8456	VSI0794	IC	1	
IC8457	VSI0795	IC	1	
IC8458,59	MC74HC574AN	IC	2	
IC8460	VSI0782B	IC	1	
IC8461,62	MC74HC86F	IC	2	
IC8463	VSI0783	IC	1	

Ref.No.	Part No.	Part Name & Description	Pcs	Remarks
IC8464	VSI0793	IC	1	
IC8465	VSI0794	IC	1	
IC8466	VSI0795	IC	1	
IC8467,68	MC74HC574AN	IC	2	
IC8469	VSI0782B	IC	1	
IC8501,02	UPD42505C-50	IC	2	
IC8503	VSI0779B	IC	1	
IC8504-07	IDTFCT399ASO	IC	4	
IC8508	MB121M246	IC	1	
IC8509	VSX0468	IC	1	
IC8510-12	MC10116L	IC	3	
IC8513	MC10115L	IC	1	
IC8514	MC10104L	IC	1	
IC8515	MC10125L	IC	1	
IC8516-20	SN74AS244NS	IC	5	
IC8551,52	MC74HC541AN	IC	2	
IC8553	L7A0674	IC	1	
IC8554,55	HM62832HP35	IC	2	
IC8556	MB81C78A35PF	IC	1	
IC8601	TC9122P	IC	1	
IC8602	MC4044P	IC	1	
IC8603	TC9122P	IC	1	
IC8605	AN78L05	IC	1	
IC8606	SN74LS628NS	IC	1	
IC8607	74F74SJ	IC	1	
IC8608	MC74HC393F	IC	1	
IC8609	MC4044P	IC	1	
IC8610	TC9122P	IC	1	
IC8612	AN78L05	IC	1	
IC8613	SN74LS628NS	IC	1	
IC8614	SN74LS92NS	IC	1	
IC8615	MC4044P	IC	1	
IC8616	MC74HC163AF	IC	1	
IC8618	AN78L05	IC	1	
IC8619	SN74LS629NS	IC	1	
IC8620-22	MC74HC574AF	IC	3	
IC8623	VSI0942A	IC	1	
IC8651	AN78L05	IC	1	
IC8652	MC74HC157AF	IC	1	
IC8653	MC4044P	IC	1	
IC8655,56	MC74HC163AF	IC	2	
IC8657	MC74HC04AF	IC	1	
IC8658,59	MC74HC163AF	IC	2	
IC8660	SN74LS123NS	IC	1	
IC8661	AN78L05	IC	1	
IC8662	MC4044P	IC	1	
IC8664	74F74SJ	IC	1	
IC8665	TC9122P	IC	1	
IC8666	VSX0450	IC	1	
IC8667	MC74HC04AF	IC	1	
IC8668	VSX0392	IC	1	
IC8669	CD74AC04M	IC	1	
IC8670	MC74HC74AF	IC	1	
IC8701	AN78L05	IC	1	
IC8702,03	MC74HC163AF	IC	2	
IC8704	MC4044P	IC	1	
IC8706	MC74HC157AF	IC	1	
IC8707,08	MC74HC163AF	IC	2	
IC8709	MC74HC04AF	IC	1	
IC8710	74F153SJ	IC	1	
IC8711	74F74SJ	IC	1	
IC8712	SN74LS123NS	IC	1	
IC8713	VSI0941B	IC	1	
IC8714	VSX0450	IC	1	
IC8715	MC74HC04AF	IC	1	
IC8751	VSI0934B	IC	1	
IC8752	VSI0936A	IC	1	
IC8753	VSI0938D	IC	1	
IC8754	VSI0939	IC	1	
IC8755	VSI0943	IC	1	
IC8760	SN74LS151NS	IC	1	
IC8761	MC74HC04AF	IC	1	
IC8801	SN74LS92NS	IC	1	
IC8802	AN78L05	IC	1	
IC8803	MC4044P	IC	1	

Ref.No.	Part No.	Part Name & Description	Pcs	Remarks
IC8805	74F163ASJ	IC	1	
IC8806	VSX0391	IC	1	
IC8807	CD74AC04M	IC	1	
IC156S1,S2	VJS3185	CONNECTOR (FEMALE)	2	
ICS8108,09	VJS3123	CONNECTOR (FEMALE)	2	
ICS8114	VJS2575	CONNECTOR (FEMALE)	1	
ICS8151,52	VJS3122A044	CONNECTOR (FEMALE)	2	
ICS8353	VJS3096328	CONNECTOR (FEMALE)	1	
ICS8455-57	VJS2726	CONNECTOR (FEMALE)	3	
ICS8464-66	VJS2726	CONNECTOR (FEMALE)	3	
ICS8751	VJS3096328	CONNECTOR (FEMALE)	1	
ICS8753	VJS3096328	CONNECTOR (FEMALE)	1	
J8201,02	ERJ6GEY0R00	C.RESISTOR 1/10W 0	2	
J8251-53	ERJ6GEY0R00	C.RESISTOR 1/10W 0	3	
J8301-03	ERJ6GEY0R00	C.RESISTOR 1/10W 0	3	
J8351,52	ERJ6GEY0R00	C.RESISTOR 1/10W 0	2	
L8001-04	VLF0931	FILTER	4	
OSC8501	VSX0452	CRYSTAL OSCILLATOR	1	
P001	VJP1245T	CONNECTOR (MALE)	1	
P1,P2	VJP2509	CONNECTOR (MALE)	2	
PC8001-05	ECUM1E104ZFN	C.CAPACITOR 25V 0.1U	5	
PC8051-59	ECUM1E104ZFN	C.CAPACITOR 25V 0.1U	9	
PC8101-14	ECUM1E104ZFN	C.CAPACITOR 25V 0.1U	14	
PC8151-57	ECUM1E104ZFN	C.CAPACITOR 25V 0.1U	7	
PC8201-13	ECUM1E104ZFN	C.CAPACITOR 25V 0.1U	13	
PC8251-62	ECUM1E104ZFN	C.CAPACITOR 25V 0.1U	12	
PC8301-12	ECUM1E104ZFN	C.CAPACITOR 25V 0.1U	12	
PC8351-62	ECUM1E104ZFN	C.CAPACITOR 25V 0.1U	12	
PC8401-17	ECUM1E104ZFN	C.CAPACITOR 25V 0.1U	17	
PC8451-69	ECUM1E104ZFN	C.CAPACITOR 25V 0.1U	19	
PC8501-20	ECUM1E104ZFN	C.CAPACITOR 25V 0.1U	20	
PC8551-56	ECUM1E104ZFN	C.CAPACITOR 25V 0.1U	6	
PC8601-23	ECUM1E104ZFN	C.CAPACITOR 25V 0.1U	23	
PC8651-53	ECUM1E104ZFN	C.CAPACITOR 25V 0.1U	3	
PC8655-70	ECUM1E104ZFN	C.CAPACITOR 25V 0.1U	16	
PC8701-15	ECUM1E104ZFN	C.CAPACITOR 25V 0.1U	15	
PC8751-61	ECUM1E104ZFN	C.CAPACITOR 25V 0.1U	11	
PC8801-07	ECUM1E104ZFN	C.CAPACITOR 25V 0.1U	7	
PIN1-N3	VJR0423	PIN	3	
Q8601,02	2SD601-R	TRANSISTOR	2	
		RESISTORS		
R2	ERJ6GEY0R00	C.RESISTOR 1/10W 0	1	
R8001-07	ERJ6GEYJ101	M.RESISTOR CH1/10W 100	7	
R8008,09	ERJ6GEYJ471	M.RESISTOR CH1/10W 470	2	
R8012,13	ERJ6GEYJ471	M.RESISTOR CH1/10W 470	2	
R8014-16	ERJ6GEYJ101	M.RESISTOR CH1/10W 100	3	
R8017,18	ERJ6GEYJ471	M.RESISTOR CH1/10W 470	2	
R8019-21	ERJ6GEY0R00	C.RESISTOR 1/10W 0	3	
R8024-29	ERJ6GEYJ101	M.RESISTOR CH1/10W 100	6	
R8030-41	ERJ6GEY0R00	C.RESISTOR 1/10W 0	12	
R8042,43	ERJ6GEYJ101	M.RESISTOR CH1/10W 100	2	

Ref.No.	Part No.	Part Name & Description	Pcs	Remarks
R8044	ERJ6GEY0R00	C.RESISTOR 1/10W 0	1	
R8051-58	ERJ6GEYJ103	M.RESISTOR CH1/10W 10K	8	
R8101-08	ERJ6GEYJ101	M.RESISTOR CH1/10W 100	8	
R8109	ERJ6GEYJ473	M.RESISTOR CH1/10W 47K	1	
R8111,12	ERJ6GEYJ101	M.RESISTOR CH1/10W 100	2	
R8113	ERJ6GEYJ103	M.RESISTOR CH1/10W 10K	1	
R8114	ERJ6GEYJ123	M.RESISTOR CH1/10W 12K	1	
R8115	ERJ6GEYJ103	M.RESISTOR CH1/10W 10K	1	
R8116	ERJ6GEYJ123	M.RESISTOR CH1/10W 12K	1	
R8117-33	ERJ6GEYJ471	M.RESISTOR CH1/10W 470	17	
R8134-37	ERJ6GEYJ101	M.RESISTOR CH1/10W 100	4	
R8138	ERJ6GEYJ334	M.RESISTOR CH1/10W 330K	1	
R8139,40	ERQS2CKG51R0	M.RESISTOR 1/4W 51.0	2	
R8151-58	ERJ6GEYJ103	M.RESISTOR CH1/10W 10K	8	
R8201	ERJ6GEYJ103	M.RESISTOR CH1/10W 10K	1	
R8251-53	ERJ6GEYJ103	M.RESISTOR CH1/10W 10K	3	
R8301-03	ERJ6GEYJ103	M.RESISTOR CH1/10W 10K	3	
R8351	ERJ6GEYJ103	M.RESISTOR CH1/10W 10K	1	
R8451	ERJ6GEYJ103	M.RESISTOR CH1/10W 10K	1	
R8501-33	ERJ6GEYJ391	M.RESISTOR CH1/10W 390	33	
R8534-39	ERJ6GEYJ560	M.RESISTOR CH1/10W 56	6	
R8540	ERJ6GEYJ103	M.RESISTOR CH1/10W 10K	1	
R8551	ERJ6GEYJ103	M.RESISTOR CH1/10W 10K	1	
R8602	ERJ6GEYJ152	M.RESISTOR CH1/10W 1.5K	1	
R8603	ERJ6GEYJ562	M.RESISTOR CH1/10W 5.6K	1	
R8604	ERJ6GEYJ102	M.RESISTOR CH1/10W 1K	1	
R8606	ERJ6GEYJ561	M.RESISTOR CH1/10W 560	1	
R8608	ERJ6GEYJ562	M.RESISTOR CH1/10W 5.6K	1	
R8609	ERJ6GEYJ152	M.RESISTOR CH1/10W 1.5K	1	
R8610	ERJ6GEYJ102	M.RESISTOR CH1/10W 1K	1	
R8612	ERJ6GEYJ561	M.RESISTOR CH1/10W 560	1	
R8614	ERJ6GEYJ562	M.RESISTOR CH1/10W 5.6K	1	
R8615	ERJ6GEYJ152	M.RESISTOR CH1/10W 1.5K	1	
R8616	ERJ6GEYJ102	M.RESISTOR CH1/10W 1K	1	
R8618,19	ERJ6GEYG153	M.RESISTOR CH1/10W 15K	2	
R8620-25	ERJ6GEYJ221	M.RESISTOR CH1/10W 220	6	
R8626-30	ERJ6GEYF472	M.RESISTOR CH1/10W 4.7K	5	
R8631-33	ERJ6GEYJ102	M.RESISTOR CH1/10W 1K	3	
R8634	ERJ6GEYJ101	M.RESISTOR CH1/10W 100	1	
R8651	ERJ6GEYJ152	M.RESISTOR CH1/10W 1.5K	1	
R8652	ERJ6GEYJ562	M.RESISTOR CH1/10W 5.6K	1	
R8653	ERJ6GEYJ102	M.RESISTOR CH1/10W 1K	1	
R8656	ERJ6GEYJ224	M.RESISTOR CH1/10W 220K	1	
R8657	ERJ6GEYJ152	M.RESISTOR CH1/10W 1.5K	1	
R8658	ERJ6GEYJ392	M.RESISTOR CH1/10W 3.9K	1	
R8659	ERJ6GEYJ102	M.RESISTOR CH1/10W 1K	1	
R8662,63	ERJ6GEYJ103	M.RESISTOR CH1/10W 10K	2	
R8664	ERJ6GEYJ824	M.RESISTOR CH1/10W 820K	1	
R8665	ERJ6GEYF472	M.RESISTOR CH1/10W 4.7K	1	
R8667	ERJ6GEY0R00	C.RESISTOR 1/10W 0	1	
R8668,69	ERJ6GEYJ101	M.RESISTOR CH1/10W 100	2	
R8701	ERJ6GEYJ152	M.RESISTOR CH1/10W 1.5K	1	
R8702	ERJ6GEYJ562	M.RESISTOR CH1/10W 5.6K	1	
R8703	ERJ6GEYJ102	M.RESISTOR CH1/10W 1K	1	
R8706	ERJ6GEYJ224	M.RESISTOR CH1/10W 220K	1	
R8707,08	ERJ6GEYJ103	M.RESISTOR CH1/10W 10K	2	
R8709	ERJ6GEYF472	M.RESISTOR CH1/10W 4.7K	1	
R8711	ERJ6GEY0R00	C.RESISTOR 1/10W 0	1	
R8712	ERJ6GEYJ101	M.RESISTOR CH1/10W 100	1	
R8758,59	ERJ6GEYF472	M.RESISTOR CH1/10W 4.7K	2	
R8801	ERJ6GEYJ152	M.RESISTOR CH1/10W 1.5K	1	
R8802	ERJ6GEYJ392	M.RESISTOR CH1/10W 3.9K	1	
R8803	ERJ6GEYJ102	M.RESISTOR CH1/10W 1K	1	
R8806,07	ERJ6GEYJ103	M.RESISTOR CH1/10W 10K	2	
R8809	ERJ6GEYJ101	M.RESISTOR CH1/10W 100	1	
RY8601,02	VSY2039	RELAY	2	
SW8051	VSS0184	SWITCH	1	
SW8151	VSS023708	SWITCH	1	

L3

L3 VIDEO/AUDIO PB VEP88070C

Ref.No.	Part No.	Part Name & Description	Pcs	Remarks
TP8154-56	VJR0646	TEST POINT	3	
TP8159-62	VJR0646	TEST POINT	4	
TP8201-07	VJR0646	TEST POINT	7	
TP8251,52	VJR0646	TEST POINT	2	
TP8301,02	VJR0646	TEST POINT	2	
TP8351-61	VJR0646	TEST POINT	11	
TP8601-09	VJR0646	TEST POINT	9	
TP8651-54	VJR0646	TEST POINT	4	
TP8701,02	VJR0646	TEST POINT	2	
TP8751-64	VJR0646	TEST POINT	14	
TP8801,02	VJR0646	TEST POINT	2	
TPG8001-05	VJR0646	TEST POINT	5	
VR8601-03	VRV0109B102	V.RESISTOR 1K	3	
		MISCELLANEOUS		
	VGQ0291	P.C.BOARD NAME PLATE	1	
	VML2143	CARD PULLER	1	
	VML2144	CARD PULLER	1	
	VMP3048	P.C.BOARD HOLDER ANGLE	2	
	VSC3336	SHIELD CASE	1	
	VSC3337	SHIELD CASE	1	
	VSC3338	SHIELD CASE	1	
	VSC3339	SHIELD CASE	1	
	VXA4418	P.C.BOARD SHIELD PLATE	1	
	XNG26E	NUT	4	
	XTV3+6FFR	SCREW	9	
	XYN26+C12	SCREW	4	
	VEP88070C	P.C.BOARD W/COMPONENT		
		L3 VIDEO/AUDIO PB		
		CAPACITORS		
C8001-03	ECA1CXLV101	E.CAPACITOR 16V 100U	3	
C8004-39	ECUM1H104ZFN	C.CAPACITOR CH 50V 0.1U	46	
CP9	VJP1242T	CONNECTOR (MALE)	1	
D8001,02	SN74S1051NS	DIODE	2	
DL8001-03	ADM50ND	IC	3	
IC8001	74F74SJ	IC	1	
IC8002,03	MC10116L	IC	2	
IC8004,05	MC10115L	IC	2	
IC8006	SN74LS541NS	IC	1	
IC8007	MC74HC573AF	IC	1	
IC8012	MC74HC541AF	IC	1	
IC8013	SN74ALS574B	IC	1	
IC8014	MC10104L	IC	1	
IC8015	MC10124L	IC	1	

Ref.No.	Part No.	Part Name & Description	Pcs	Remarks
IC8016	VSI0857C	IC	1	
IC8017	PC74HCT574	IC	1	
IC8018,19	MB81464-12	IC	2	
IC8020-22	SN74LS541NS	IC	3	
IC8023,24	MB121M246	IC	2	
IC8025	MC10125L	IC	1	
IC8027	UPD71055GB	IC	1	
IC8029	MC74HC541AF	IC	1	
IC8030	MC74HC595AF	IC	1	
IC8031	74F574SJ	IC	1	
IC8032	VSI0918A	IC	1	
IC8033	VSI0919A	IC	1	
IC8034	VSI0920A	IC	1	
IC8035	VSI1005A	IC	1	
IC8036	MC74HC574AF	IC	1	
IC8037	VSI0846	IC	1	
IC8039	MC74HC541AF	IC	1	
IC8040	MC74HC595AF	IC	1	
IC8041	74F574SJ	IC	1	
IC8042	74F241SJ	IC	1	
IC8043	MC74HC574AF	IC	1	
IC8044	SN74AS244NS	IC	1	
IC8045	MC74HC574AF	IC	1	
IC8046	SN74AS244NS	IC	1	
IC8047	UPD71055GB	IC	1	
IC8048,49	SN74LS541NS	IC	2	
IC8050	MC74HC240AF	IC	1	
IC8051	SN74LS541NS	IC	1	
IC8052	PC74HCT541T	IC	1	
IC8053	MC74HC541AF	IC	1	
IC8054	MC74HC574AF	IC	1	
IC8055	VSI0871	IC	1	
IC8056	VSI0870	IC	1	
IC8057	VSI0873	IC	1	
IC8058	VSI0871	IC	1	
IC8059	VSI0870	IC	1	
IC8060	UPD71055GB	IC	1	
IC8061	MC74HC574AF	IC	1	
IC8062	VSI0856A	IC	1	
IC8063	MC74HC574AF	IC	1	
IC8064	SN74LS541NS	IC	1	
IC8065	74F541SJ	IC	1	
IC8066,67	MC74HC541AF	IC	2	
IC8068	VSI0873	IC	1	
IC8069,70	MC74HC125AF	IC	2	
IC8071	74F11SJ	IC	1	
IC8072	PC74HCT541T	IC	1	
IC8073	MC74HC541AF	IC	1	
IC8074,75	L7A0544	IC	2	
IC8076	VSI0859E	IC	1	
IC8077	VSI0932D	IC	1	
IC8078	MC74HC04AF	IC	1	
IC8079	MC74HC32AF	IC	1	
IC8080	SN74LS541NS	IC	1	
IC8081	MB8289-25PF	IC	1	
IC8082	IDTFCT823BSO	IC	1	
IC8083	VSI0848	IC	1	
IC8084	IDTFCT823BSO	IC	1	
IC8085,86	SN74ALS574B	IC	2	
IC8087	MC74HC541AF	IC	1	
IC8088	UPD42101G-3	IC	1	
IC8089	VSI0848	IC	1	
IC8090	VSI0853B	IC	1	
IC8091	L7A0782	IC	1	
IC8092	MB81C79A35PF	IC	1	
IC8093	MB8289-25PF	IC	1	
IC8094	VSI0859E	IC	1	
IC8095,96	L7A0343	IC	2	
IC8097	MB8289-25PF	IC	1	
IC8098,99	MC74HC541AF	IC	2	
IC8100	MC10125L	IC	1	
IC8101	MC74HC125AF	IC	1	
IC8102	PC74HCT541T	IC	1	
IC8103	74ACT240SJ	IC	1	
IC8104	CY7C197-35PC	IC	1	

Ref.No.	Part No.	Part Name & Description	Pcs	Remarks
IC8105	VSI0853B	IC	1	
IC8106	CY7C197-35PC	IC	1	
IC8107	MB81C79A35PF	IC	1	
IC8108,09	IDTFCT823BSO	IC	2	
IC8110	MC74HC04AF	IC	1	
IC8111	SN74LS541NS	IC	1	
IC8112	L7A0343	IC	1	
IC8113,14	MC74HC125AF	IC	2	
IC8115	MC74HC541AF	IC	1	
IC8116	SN74AS32NS	IC	1	
IC8117	SN74AS153NS	IC	1	
IC8118	MC74HC244AF	IC	1	
IC8119	MC74HC125AF	IC	1	
IC8120-22	MC74HC541AF	IC	3	
IC8123	MB81C79A35PF	IC	1	
IC8124	SN74AS244NS	IC	1	
IC8125	VSI0861C	IC	1	
IC8126	VSI0854	IC	1	
IC8127	VSI0850B	IC	1	
IC8128	VSI0865B	IC	1	
IC8129	VSI0867B	IC	1	
IC8130	VSI0863B	IC	1	
IC8131	VSI0849B	IC	1	
IC8132	VSI0875	IC	1	
IC8133	MC74HC541AF	IC	1	
IC8134	VSI0876A	IC	1	
IC8135	MC74HC244AF	IC	1	
IC8136	D65180GD031	IC	1	
IC8137	IDTFCT823BSO	IC	1	
IC8138	74F399SJ	IC	1	
IC8140	SN74AS04NS	IC	1	
IC8141	SN74AS32NS	IC	1	
IC8142	MC74HC541AF	IC	1	
IC8143	SN74AS04NS	IC	1	
IC8144,45	IDTFCT823BSO	IC	2	
IC8146	D65180GD031	IC	1	
IC8147	CY7C197-35PC	IC	1	
IC8148	MC74HC244AF	IC	1	
IC8149	K6810ALG7L	IC	1	
IC8150	IDTFCT823BSO	IC	1	
IC8151	MC74HC574AF	IC	1	
IC8152	MC74HC541AF	IC	1	
IC8153	IDTFCT823BSO	IC	1	
IC8154	K6256BLG7L	IC	1	
IC8155	IDTFCT823BSO	IC	1	
IC8156	MC74HC574AF	IC	1	
IC8157,58	CY7C197-35PC	IC	2	
IC8159	MC74HC541AF	IC	1	
IC8160	VSI0847	IC	1	
IC8161	CY7C197-35PC	IC	1	
IC8162	VSI0855A	IC	1	
IC8163,64	IDTFCT823BSO	IC	2	
IC8165	MB81C79A35PF	IC	1	
IC8166	CY7C197-35PC	IC	1	
IC8167	K6256BLG7L	IC	1	
IC8168	K6810ALG7L	IC	1	
IC8169	MC74HC00AF	IC	1	
IC8170	MC74HC574AF	IC	1	
IC8171-73	K6810ALG7L	IC	3	
IC8174	VSI0851	IC	1	
IC8175	74F399SJ	IC	1	
IC8176	SN74AS244NS	IC	1	
IC8177	MC74HC574AF	IC	1	
IC8178	VSI0855A	IC	1	
IC8179	CY7C197-35PC	IC	1	
IC8180	K6256BLG7L	IC	1	
IC8181	K6810ALG7L	IC	1	
IC8182	IDTFCT823BSO	IC	1	
IC8183	MC74HC574AF	IC	1	
IC8184	MC74HC175F	IC	1	
IC8185	MC74HC74AF	IC	1	
IC8186	SN74ALS574B	IC	1	
IC8187	MC74HC574AF	IC	1	
IC8188	MC74HC541AF	IC	1	
IC8189	VSI0851	IC	1	

Ref.No.	Part No.	Part Name & Description	Pcs	Remarks
IC8190-92	K6256BLG7L	IC	3	
IC8193	MC74HC574AF	IC	1	
IC8194	SN74LS541NS	IC	1	
IC8195	L7A0343	IC	1	
IC8196	MC74HC574AF	IC	1	
IC8197	MC74HC541AF	IC	1	
IC8198-00	IDTFCT823BSO	IC	3	
IC8201	74FCT574ASC	IC	1	
IC8202,03	MC74HC541AF	IC	2	
IC8204	L7A0343	IC	1	
IC8205	74FCT574ASC	IC	1	
IC8206-08	MC74HC574AF	IC	3	
IC8209	MC74HC00AF	IC	1	
IC8210	MC74HC574AF	IC	1	
IC8211	MC74HC175F	IC	1	
IC8212	UPD42101G-3	IC	1	
IC8213	SN74LS541NS	IC	1	
IC8214	UPD42101G-3	IC	1	
IC8215	SN74LS541NS	IC	1	
IC8216,17	UPD42101G-3	IC	2	
IC8218	IDTFCT823BSO	IC	1	
IC8219	MC74HC541AF	IC	1	
IC8220,21	UPD42101G-3	IC	2	
IC8222	IDTFCT823BSO	IC	1	
IC8223	SN74LS245NS	IC	1	
IC8224,25	MC74HC541AF	IC	2	
IC8226	SN74AS32NS	IC	1	
IC8227	MC74HC541AF	IC	1	
IC8228	MB81C79A35PF	IC	1	
IC8229	MC74HC541AF	IC	1	
IC8230	MC74HC574AF	IC	1	
IC8231	SN74ALS574B	IC	1	
IC8232	UPD42101G-3	IC	1	
IC8233	VSI0876A	IC	1	
ICS8055-59	VJS2726	CONNECTOR (FEMALE)	5	
ICS8068	VJS2726	CONNECTOR (FEMALE)	1	
ICS8077	VJS3096328	CONNECTOR (FEMALE)	1	
JP8001-11	VJP1940	CONNECTOR (MALE)	11	
JS8001-11	VJS1940	CONNECTOR (FEMALE)	11	
L8001-03	VLF0931	FILTER	3	
LED8001-04	LN25RP	LED	4	
P8005,06	VJP3151	CONNECTOR (MALE)	2	
		RESISTORS		
R8001,02	ERJ6GEYJ391	M.RESISTOR CH1/10W 390	2	
R8003	ERJ6GEYJ101	M.RESISTOR CH1/10W 100	1	
R8004-07	ERJ6GEYJ471	M.RESISTOR CH1/10W 470	4	
R8008	ERJ6GEYJ101	M.RESISTOR CH1/10W 100	1	
R8009,10	ERJ6GEYJ471	M.RESISTOR CH1/10W 470	2	
R8011,12	ERJ6GEYJ391	M.RESISTOR CH1/10W 390	2	
R8013	ERJ6GEYJ101	M.RESISTOR CH1/10W 100	1	
R8014,15	ERJ6GEYJ471	M.RESISTOR CH1/10W 470	2	
R8016	ERJ6GEYJ101	M.RESISTOR CH1/10W 100	1	
R8017,18	ERJ6GEYJ471	M.RESISTOR CH1/10W 470	2	
R8019-21	ERJ6GEYJ101	M.RESISTOR CH1/10W 100	3	
R8022	ERJ6GEYJ471	M.RESISTOR CH1/10W 470	1	
R8023,24	ERJ6GEYJ101	M.RESISTOR CH1/10W 100	2	
R8025-27	ERJ6GEYJ471	M.RESISTOR CH1/10W 470	3	

L4 VIDEO PROCESS VEP88071E
L4 SUB VEP88090A

Ref.No.	Part No.	Part Name & Description	Pcs	Remarks
R8028,29	ERJ6GEYJ101	M.RESISTOR CH1/10W 100	2	
R8030	ERJ6GEYJ471	M.RESISTOR CH1/10W 470	1	
R8031-38	ERJ6GEY0R00	C.RESISTOR 1/10W 0	8	
R8039-51	ERJ6GEYJ471	M.RESISTOR CH1/10W 470	13	
R8060-63	ERJ6GEY0R00	C.RESISTOR 1/10W 0	4	
R8068	ERJ6GEYJ101	M.RESISTOR CH1/10W 100	1	
R8069-77	ERJ6GEYJ103	M.RESISTOR CH1/10W 10K	9	
R8078-80	ERJ6GEYF472	M.RESISTOR CH1/10W 4.7K	3	
R8081-62	ERJ6GEYJ103	M.RESISTOR CH1/10W 10K	82	
R8163-66	ERJ6GEYJ561	M.RESISTOR CH1/10W 560	4	
R8167-71	ERJ6GEYJ103	M.RESISTOR CH1/10W 10K	5	
R8172	ERJ6GEY0R00	C.RESISTOR 1/10W 0	1	
R8173-15	ERJ6GEYJ103	M.RESISTOR CH1/10W 10K	43	
R8216	ERJ6GEYF472	M.RESISTOR CH1/10W 4.7K	1	
SW8001-04	VSS0207	SWITCH	4	
TP8001-68	VJR0646	TEST POINT	68	
TPG8001-09	VJR0646	TEST POINT	9	
		MISCELLANEOUS		
	VGQ0291	P.C.BOARD NAME PLATE	1	
	VJS1435	CONNECTOR (FEMALE)	4	
	VML2143	CARD PULLER	1	
	VML2144	CARD PULLER	1	
	VMP3048	P.C.BOARD HOLDER ANGLE	2	
	VXA4418	P.C.BOARD SHIELD PLATE	1	
	XNG26E	NUT	4	
	XTV3+6FFR	SCREW	9	
	XYN26+C12	SCREW	4	
	VEP88071E	P.C.BOARD W/COMPONENT		
		L4 VIDEO PROCESS		
	VEP88090A	P.C.BOARD W/COMPONENT		VEP88071E
		L4 SUB		
		CAPACITORS		
C8001,02	ECA1CXS470	E.CAPACITOR 16V 47U	2	
C8003-05	ECA1AXS680	E.CAPACITOR 10V 68U	3	
C8006-10	ECUM1H103ZFN	C.CAPACITOR CH 50V 0.01U	5	
C8011-14	ECA1CXS470	E.CAPACITOR 16V 47U	4	
C8015,16	ECUM1H103ZFN	C.CAPACITOR CH 50V 0.01U	2	
C8017	ECA1CXS470	E.CAPACITOR 16V 47U	1	
C8018	ECUM1H103ZFN	C.CAPACITOR CH 50V 0.01U	1	
C8019	ECA1CXS470	E.CAPACITOR 16V 47U	1	
C8020	ECUM1H103ZFN	C.CAPACITOR CH 50V 0.01U	1	
C8021,22	ECUM1H103KBN	C.CAPACITOR CH 50V 0.01U	2	
C8023	ECUM1H820JCN	C.CAPACITOR CH 50V 82P	1	
C8024	ECUM1H103ZFN	C.CAPACITOR CH 50V 0.01U	1	
C8025	ECA1CXS470	E.CAPACITOR 16V 47U	1	
C8026	ECQB1H104JF	P.CAPACITOR 50V 0.1U	1	
C8027	ECUM1H330JCN	C.CAPACITOR CH 50V 33P	1	
C8028	ECUM1H180JCN	C.CAPACITOR CH 50V 18P	1	
C8029	ECUM1H680JCN	C.CAPACITOR CH 50V 68P	1	
C8030,31	ECQB1H104JF	P.CAPACITOR 50V 0.1U	2	
C8032	ECA1HXNV010	E.CAPACITOR 50V 1U	1	
C8033	ECUM1H103ZFN	C.CAPACITOR CH 50V 0.01U	1	
C8034	ECA1CXS470	E.CAPACITOR 16V 47U	1	
C8035	ECUM1H103ZFN	C.CAPACITOR CH 50V 0.01U	1	
C8036	ECA1VXS220	E.CAPACITOR 35V 22U	1	
C8037	ECUM1H121JCN	C.CAPACITOR CH 50V 120P	1	

Ref.No.	Part No.	Part Name & Description	Pcs	Remarks
C8038	ECUM1H560JCN	C.CAPACITOR CH 50V 56P	1	
C8039	ECUM1H151JCN	C.CAPACITOR CH 50V 150P	1	
C8040	ECUM1H101JCN	C.CAPACITOR CH 50V 100P	1	
C8041	ECUM1H102JCN	C.CAPACITOR CH 50V 1000P	1	
C8042	ECUM1H150JCN	C.CAPACITOR CH 50V 15P	1	
C8043-45	ECUM1H103ZFN	C.CAPACITOR CH 50V 0.01U	3	
C8046	ECUM1H122JN	C.CAPACITOR CH 50V 1200P	1	
C8047-52	ECUM1H103ZFN	C.CAPACITOR CH 50V 0.01U	6	
C8053	ECQB1H104JF	P.CAPACITOR 50V 0.1U	1	
C8054,55	ECUM1H103ZFN	C.CAPACITOR CH 50V 0.01U	2	
C8056	ECUM1H102JCN	C.CAPACITOR CH 50V 1000P	1	
C8057-59	ECUM1H103ZFN	C.CAPACITOR CH 50V 0.01U	3	
C8060	ECUM1H221JCN	C.CAPACITOR CH 50V 220P	1	
C8061	ECQB1H104JF	P.CAPACITOR 50V 0.1U	1	
C8062,63	ECUM1H103ZFN	C.CAPACITOR CH 50V 0.01U	2	
C8064	ECUM1H102JCN	C.CAPACITOR CH 50V 1000P	1	
C8065	ECUM1H150JCN	C.CAPACITOR CH 50V 15P	1	
C8066,67	ECUM1H103ZFN	C.CAPACITOR CH 50V 0.01U	2	
C8068	ECA1HXSR47	E.CAPACITOR 50V 0.47U	1	
C8069-71	ECUM1H103ZFN	C.CAPACITOR CH 50V 0.01U	3	
C8073	ECA1CXS470	E.CAPACITOR 16V 47U	1	
C8074-77	ECUM1H103ZFN	C.CAPACITOR CH 50V 0.01U	4	
C8078	ECUM1H390JCN	C.CAPACITOR CH 50V 39P	1	
C8079-82	ECUM1H103ZFN	C.CAPACITOR CH 50V 0.01U	4	
C8083	ECUM1H820JCN	C.CAPACITOR CH 50V 82P	1	
C8084,85	ECUM1H103ZFN	C.CAPACITOR CH 50V 0.01U	2	
C8086	ECA1CXS100	E.CAPACITOR 16V 10U	1	
C8087	ECUM1H103ZFN	C.CAPACITOR CH 50V 0.01U	1	
C8088	ECUM1H103KBN	C.CAPACITOR CH 50V 0.01U	1	
C8089	ECA1HXNV2R2	E.CAPACITOR 50V 2.2U	1	
C8090,91	ECUM1H103ZFN	C.CAPACITOR CH 50V 0.01U	2	
C8092	ECA1CXS470	E.CAPACITOR 16V 47U	1	
C8093	ECUM1H103ZFN	C.CAPACITOR CH 50V 0.01U	1	
C8094	ECQB1H103JF	P.CAPACITOR 50V 0.01U	1	
C8095	ECV1ZW20X53T	C.CAPACITOR 20P	1	
C8096	ECUM1H102JCN	C.CAPACITOR CH 50V 1000P	1	
C8097,98	ECUM1H220JCN	C.CAPACITOR CH 50V 22P	2	
C8099	ECUM1H103KBN	C.CAPACITOR CH 50V 0.01U	1	
C8100-04	ECA1CXS470	E.CAPACITOR 16V 47U	5	
C8105-08	ECUM1H103ZFN	C.CAPACITOR CH 50V 0.01U	4	
C8109	ECQB1H683JF	P.CAPACITOR 50V 0.068U	1	
C8110,11	ECUM1H820JCN	C.CAPACITOR CH 50V 82P	2	
C8112-16	ECUM1H103ZFN	C.CAPACITOR CH 50V 0.01U	5	
C8117	ECUM1H121JCN	C.CAPACITOR CH 50V 120P	1	
C8118	ECUM1H181JCN	C.CAPACITOR CH 50V 180P	1	
C8119	ECUM1H221JCN	C.CAPACITOR CH 50V 220P	1	
C8120	ECUM1H103KBN	C.CAPACITOR CH 50V 0.01U	1	
C8121	ECA1CXNV100	E.CAPACITOR 16V 10U	1	
C8122	ECUM1H102JCN	C.CAPACITOR CH 50V 1000P	1	
C8123	ECUM1H103ZFN	C.CAPACITOR CH 50V 0.01U	1	
C8124	ECUM1H102JCN	C.CAPACITOR CH 50V 1000P	1	
C8125	ECUM1H103KBN	C.CAPACITOR CH 50V 0.01U	1	
C8126-28	ECUM1H103ZFN	C.CAPACITOR CH 50V 0.01U	3	
C8129	ECA1VXNV4R7	E.CAPACITOR 35V 4.7U	1	
C8130-35	ECUM1H103ZFN	C.CAPACITOR CH 50V 0.01U	6	
C8136,37	ECUM1H103KBN	C.CAPACITOR CH 50V 0.01U	2	
C8138,39	ECUM1H103ZFN	C.CAPACITOR CH 50V 0.01U	2	
C8140-42	ECUM1E104ZFN	C.CAPACITOR 25V 0.1U	3	
C8143	ECUM1H223KBN	C.CAPACITOR CH 50V 0.022U	1	
C8145,46	ECA1HXS2R2	E.CAPACITOR 50V 2.2U	2	
C8147-49	ECUM1H103ZFN	C.CAPACITOR CH 50V 0.01U	3	
C8150,51	ECUM1H470JCN	C.CAPACITOR CH 50V 47P	2	
C8152	ECUM1H180JCN	C.CAPACITOR CH 50V 18P	1	
C8153	ECUM1H680JCN	C.CAPACITOR CH 50V 68P	1	
C8154-57	ECUM1H103ZFN	C.CAPACITOR CH 50V 0.01U	4	
C8158-63	ECUM1E104ZFN	C.CAPACITOR 25V 0.1U	6	
C8164,65	ECUM1H103ZFN	C.CAPACITOR CH 50V 0.01U	2	
C8166	ECUM1E104ZFN	C.CAPACITOR 25V 0.1U	1	
C8167	ECUM1H103ZFN	C.CAPACITOR CH 50V 0.01U	1	
C8169	ECUM1H103ZFN	C.CAPACITOR CH 50V 0.01U	1	
C8170	ECA1HXNV010	E.CAPACITOR 50V 1U	1	
C8171	ECUM1H103ZFN	C.CAPACITOR CH 50V 0.01U	1	
C8172	ECUM1E104ZFN	C.CAPACITOR 25V 0.1U	1	
C8180,81	ECA1CXS470	E.CAPACITOR 16V 47U	2	
C8182	ECUM1H103ZFN	C.CAPACITOR CH 50V 0.01U	1	

Ref.No.	Part No.	Part Name & Description	Pcs	Remarks
C8183	ECQB1H104JF	P.CAPACITOR 50V 0.1U	1	
C8184	ECUM1H472KBN	C.CAPACITOR CH 50V 4700P	1	
C8185-89	ECUM1H103ZFN	C.CAPACITOR CH 50V 0.01U	5	
C8190	ECUM1H103KBN	C.CAPACITOR CH 50V 0.01U	1	
C8191	ECUM1H103ZFN	C.CAPACITOR CH 50V 0.01U	1	
C8200	ECUM1H103ZFN	C.CAPACITOR CH 50V 0.01U	1	
C8201	ECA1CXS470	E.CAPACITOR 16V 47U	1	
C8202	ECUM1H103ZFN	C.CAPACITOR CH 50V 0.01U	1	
C8203	ECA1CXS470	E.CAPACITOR 16V 47U	1	
C8204	ECUM1H103ZFN	C.CAPACITOR CH 50V 0.01U	1	
C8205	ECA1CXS470	E.CAPACITOR 16V 47U	1	
C8206	ECUM1H330JCN	C.CAPACITOR CH 50V 33P	1	
C8207	ECUM1H181JCN	C.CAPACITOR CH 50V 180P	1	
C8208	ECUM1H103ZFN	C.CAPACITOR CH 50V 0.01U	1	
C8209	ECUM1H151JCN	C.CAPACITOR CH 50V 150P	1	
C8210	ECUM1H471JCN	C.CAPACITOR CH 50V 470P	1	
C8211,12	ECUM1H103ZFN	C.CAPACITOR CH 50V 0.01U	2	
C8213,14	ECUM1H330JCN	C.CAPACITOR CH 50V 33P	2	
C8215,16	ECUM1H103ZFN	C.CAPACITOR CH 50V 0.01U	2	
C8217,18	ECUM1H103KBN	C.CAPACITOR CH 50V 0.01U	2	
C8219	ECUM1H150JCN	C.CAPACITOR CH 50V 15P	1	
C8220	ECUM1H121JCN	C.CAPACITOR CH 50V 120P	1	
C8221	ECUM1H103ZFN	C.CAPACITOR CH 50V 0.01U	1	
C8222	ECUM1H470JCN	C.CAPACITOR CH 50V 47P	1	
C8223	ECUM1H101JCN	C.CAPACITOR CH 50V 100P	1	
C8224	ECUM1H103ZFN	C.CAPACITOR CH 50V 0.01U	1	
C8225	ECUM1H330JCN	C.CAPACITOR CH 50V 33P	1	
C8226	ECUM1H103ZFN	C.CAPACITOR CH 50V 0.01U	1	
C8227	ECUM1H822KBN	C.CAPACITOR CH 50V 8200P	1	
C8228	ECUM1H181JCN	C.CAPACITOR CH 50V 180P	1	
C8229	ECA1CXS470	E.CAPACITOR 16V 47U	1	
C8230-32	ECUM1H103ZFN	C.CAPACITOR CH 50V 0.01U	3	
C8233	ECUM1H103KBN	C.CAPACITOR CH 50V 0.01U	1	
C8234,35	ECA1HXNV010	E.CAPACITOR 50V 1U	2	
C8236	ECQB1H224JF	P.CAPACITOR 50V 0.22U	1	
C8237	ECUM1H471JCN	C.CAPACITOR CH 50V 470P	1	
C8238,39	ECUM1H103ZFN	C.CAPACITOR CH 50V 0.01U	2	
C8240	ECUM1H102JCN	C.CAPACITOR CH 50V 1000P	1	
C8241-43	ECUM1H103ZFN	C.CAPACITOR CH 50V 0.01U	3	
C8244	ECUM1H680JCN	C.CAPACITOR CH 50V 68P	1	
C8245	ECUM1H822KBN	C.CAPACITOR CH 50V 8200P	1	
C8246	ECA1CXS470	E.CAPACITOR 16V 47U	1	
C8247	ECUM1H151JCN	C.CAPACITOR CH 50V 150P	1	
C8248	ECUM1H103ZFN	C.CAPACITOR CH 50V 0.01U	1	
C8249	ECUM1H103KBN	C.CAPACITOR CH 50V 0.01U	1	
C8250,51	ECA1HXNV010	E.CAPACITOR 50V 1U	2	
C8252	ECA1HXNV2R2	E.CAPACITOR 50V 2.2U	1	
C8253	ECUM1H471JCN	C.CAPACITOR CH 50V 470P	1	
C8254-57	ECUM1H103ZFN	C.CAPACITOR CH 50V 0.01U	4	
C8258	ECA1CXS470	E.CAPACITOR 16V 47U	1	
C8259	ECUM1H103ZFN	C.CAPACITOR CH 50V 0.01U	1	
C8260	ECA1CXS470	E.CAPACITOR 16V 47U	1	
C8261	ECUM1H103ZFN	C.CAPACITOR CH 50V 0.01U	1	
C8270,71	ECA1CXS470	E.CAPACITOR 16V 47U	2	
C8300-09	ECUM1H103ZFN	C.CAPACITOR CH 50V 0.01U	10	
C8310	ECA1VXS220	E.CAPACITOR 35V 22U	1	
C8311-24	ECUM1H103ZFN	C.CAPACITOR CH 50V 0.01U	14	
C8326	ECUM1H103ZFN	C.CAPACITOR CH 50V 0.01U	1	
C8329-39	ECUM1H103ZFN	C.CAPACITOR CH 50V 0.01U	11	
C8400-06	ECUM1H103ZFN	C.CAPACITOR CH 50V 0.01U	7	
C8407	ECA1HXS010	E.CAPACITOR 50V 1U	1	
C8408	ECUM1E104ZFN	C.CAPACITOR 25V 0.1U	1	
C8409-12	ECUM1H103ZFN	C.CAPACITOR CH 50V 0.01U	4	
C8413-16	ECUM1H330JCN	C.CAPACITOR CH 50V 33P	4	
C8417	ECUM1E104ZFN	C.CAPACITOR 25V 0.1U	1	
C8418-22	ECUM1H103ZFN	C.CAPACITOR CH 50V 0.01U	5	
C8423	ECUM1E104ZFN	C.CAPACITOR 25V 0.1U	1	
C8424	ECUM1H103ZFN	C.CAPACITOR CH 50V 0.01U	1	
C8430-32	ECUM1H103ZFN	C.CAPACITOR CH 50V 0.01U	3	
C8501-12	ECUM1H103ZFN	C.CAPACITOR CH 50V 0.01U	12	
C8514-24	ECUM1H103ZFN	C.CAPACITOR CH 50V 0.01U	11	
C8527,28	ECUM1H103ZFN	C.CAPACITOR CH 50V 0.01U	2	
C8531-38	ECUM1H103ZFN	C.CAPACITOR CH 50V 0.01U	8	
C8540-42	ECUM1H103ZFN	C.CAPACITOR CH 50V 0.01U	3	
C8544-57	ECUM1H103ZFN	C.CAPACITOR CH 50V 0.01U	14	

Ref.No.	Part No.	Part Name & Description	Pcs	Remarks
C8560-64	ECUM1H103ZFN	C.CAPACITOR CH 50V 0.01U	5	
C8600-02	ECUM1H103ZFN	C.CAPACITOR CH 50V 0.01U	3	
C8604-30	ECUM1H103ZFN	C.CAPACITOR CH 50V 0.01U	27	
C8632-38	ECUM1H103ZFN	C.CAPACITOR CH 50V 0.01U	7	
C8642,43	ECUM1H103ZFN	C.CAPACITOR CH 50V 0.01U	2	
C8700-05	ECUM1H103ZFN	C.CAPACITOR CH 50V 0.01U	6	
C8710-15	ECUM1H103ZFN	C.CAPACITOR CH 50V 0.01U	6	
C8718,19	ECUM1H103ZFN	C.CAPACITOR CH 50V 0.01U	2	
C8800-05	ECUM1E104ZFN	C.CAPACITOR 25V 0.1U	6	
C8809-11	ECUM1H103ZFN	C.CAPACITOR CH 50V 0.01U	3	
C8851-58	ECUM1H103ZFN	C.CAPACITOR CH 50V 0.01U	8	
C8860,61	ECUM1H103ZFN	C.CAPACITOR CH 50V 0.01U	2	
C8900-08	ECUM1H103ZFN	C.CAPACITOR CH 50V 0.01U	9	
C8910-17	ECUM1H103ZFN	C.CAPACITOR CH 50V 0.01U	8	
C8984-86	ECUM1H103ZFN	C.CAPACITOR CH 50V 0.01U	3	
C8993-97	ECUM1H103ZFN	C.CAPACITOR CH 50V 0.01U	5	
CN8001	VJP2509	CONNECTOR (MALE)	1	
CN8001	VJS2509	CONNECTOR (FEMALE)	1	
CN8002	VJP2509	CONNECTOR (MALE)	1	
CN8002	VJS2509	CONNECTOR (FEMALE)	1	
D8001	1SS101	DIODE	1	
D8002	MA151K	DIODE	1	
D8003	MA335-R	DIODE	1	
D8005	MA151WK	DIODE	1	
D8100	MA153A	DIODE	1	
D8101	MA151WA	DIODE	1	
D8102-04	MA151K	DIODE	3	
D8200,01	MA3051	DIODE	2	
D8202	MA153A	DIODE	1	
D8203	MA3051	DIODE	1	
D8204	MA151K	DIODE	1	
D8205,06	MA3051	DIODE	2	
D8207	MA153A	DIODE	1	
D8208	MA3051	DIODE	1	
D8209	MA3110L	DIODE	1	
D8210	MA3024	DIODE	1	
D8211	MA3068	DIODE	1	
D8800	LN25RP	LED	1	
DL8001	ADM50ND	IC	1	
IC8001	AN78L09	IC	1	
IC8002	AN91A12S	IC	1	
IC8003	NE521D	IC	1	
IC8004	UPC78N05H	IC	1	
IC8005	MC14538BF	IC	1	
IC8006-08	SN74LS221NS	IC	3	
IC8009	UPD65022F210	IC	1	
IC8010	MC74HC574AF	IC	1	
IC8011	UPC624C	IC	1	
IC8012	NJM4558M	IC	1	
IC8013	NJM360M	IC	1	
IC8014	SN74LS05NS	IC	1	
IC8015	MC74HC04AF	IC	1	
IC8016	MC74HC125AF	IC	1	
IC8017	SN74LS221NS	IC	1	
IC8018	MC74HC157AF	IC	1	
IC8019	NE521D	IC	1	
IC8021	74AC74SJ	IC	1	
IC8022	74AC86SJ	IC	1	
IC8023	74AC02SJ	IC	1	
IC8024	74AC74SJ	IC	1	
IC8025	74AC157SJ	IC	1	
IC8026	MC74HC4053F	IC	1	
IC8027	NJM082BM	IC	1	

Ref.No.	Part No.	Part Name & Description	Pcs	Remarks
IC8028	AN78L09	IC	1	
IC8030	VSI0948C	IC	1	
IC8031	AN79L05	IC	1	
IC8032	SN74LS123NS	IC	1	
IC8033	MN53015VZW	IC	1	
IC8034	SN74LS221NS	IC	1	
IC8100	AN78L05	IC	1	
IC8101	SN74LS123NS	IC	1	
IC8102	SN74LS221NS	IC	1	
IC8103	SN74LS123NS	IC	1	
IC8104	SN74LS05NS	IC	1	
IC8105	SN74AS109NS	IC	1	
IC8106	MC74HC109F	IC	1	
IC8107	MC74HC00AF	IC	1	
IC8108	SN74AS109NS	IC	1	
IC8109	MC74HC163AF	IC	1	
IC8110,11	MC74HC164F	IC	2	
IC8112	MC74HC86F	IC	1	
IC8113	MC74HC20F	IC	1	
IC8114	MC74HC32AF	IC	1	
IC8115	MC74HC574AF	IC	1	
IC8116	MC14538BF	IC	1	
IC8117,18	MC74HC04AF	IC	2	
IC8119	74F112SJ	IC	1	
IC8120	MC74HC74AF	IC	1	
IC8121,22	MC74HC574AF	IC	2	
IC8123	NJM084M	IC	1	
IC8124,25	NJM311M	IC	2	
IC8126	NJM084M	IC	1	
IC8127	MB40576P	IC	1	
IC8128	DAC10-GX	IC	1	
IC8129	NJM084M	IC	1	
IC8130	AN78L05	IC	1	
IC8200	AN78L05	IC	1	
IC8201	AN79L05	IC	1	
IC8202	SN74LS221NS	IC	1	
IC8203	NJM1496M	IC	1	
IC8204	MC74HC4053F	IC	1	
IC8205,06	NJM084M	IC	2	
IC8207	SN74LS221NS	IC	1	
IC8208	SN74LS05NS	IC	1	
IC8209	AN79L09	IC	1	
IC8210	MC14050BF	IC	1	
IC8211	AN79L05	IC	1	
IC8300	L7A0543	IC	1	
IC8301	MC74HC541AF	IC	1	
IC8302	VSI0805C	IC	1	
IC8303	VSI0807	IC	1	
IC8304	VSI0809A	IC	1	
IC8305	74F541SJ	IC	1	
IC8306	SN74LS682NS	IC	1	
IC8307,08	MC74HC04AF	IC	2	
IC8309	MC74HC125AF	IC	1	
IC8310	MC74HC541AF	IC	1	
IC8311	MC14538BF	IC	1	
IC8312	MC74HC157AF	IC	1	
IC8313,14	74F541SJ	IC	2	
IC8316	74F74SJ	IC	1	
IC8317	MC74HC541AF	IC	1	
IC8319,20	VSI0960	IC	2	
IC8321	VSI0944	IC	1	
IC8322	VSI0945	IC	1	
IC8323	VSI0946	IC	1	
IC8324	VSI0947	IC	1	
IC8325,26	SN74AS244NS	IC	2	
IC8327	MC74HC86F	IC	1	
IC8328	MC74HC32AF	IC	1	
IC8400-02	MC74HC138AF	IC	3	
IC8403	MC74HC04AF	IC	1	
IC8404	MC74HC74AF	IC	1	
IC8405	MC74HC4075F	IC	1	
IC8406	TL7705CPB	IC	1	
IC8407	MC74HCU04F	IC	1	
IC8408	MC74HC393F	IC	1	
IC8409	MB8464A80LFF	IC	1	

Ref.No.	Part No.	Part Name & Description	Pcs	Remarks
IC8410	MC34051P	IC	1	
IC8411	SN74LS541NS	IC	1	
IC8412	UPD78C10CW	IC	1	
IC8413	MC74HC573AF	IC	1	
IC8414	VSI1086P	IC	1	
IC8415	SN74LS541NS	IC	1	
IC8416	SN74LS245NS	IC	1	
IC8417,18	MC74HC32AF	IC	2	
IC8419	UPD71055GB	IC	1	
IC8420,21	SN74S1051NS	DIODE	2	
IC8501,02	74F574SJ	IC	2	
IC8503	74F398SC	IC	1	
IC8504-08	UPD42102G-3	IC	5	
IC8509	VSI0816	IC	1	
IC8510	VSI0817B	IC	1	
IC8511,12	MSM514222B3	IC	2	
IC8514-17	MC74HC574AF	IC	4	
IC8518	74F399SJ	IC	1	
IC8519	VSI0820	IC	1	
IC8520	L7A0344	IC	1	
IC8521,22	MC74HC574AF	IC	2	
IC8523	VSI0811A	IC	1	
IC8524	VSI0813	IC	1	
IC8527	MC74HC688F	IC	1	
IC8528	MC74HC04AF	IC	1	
IC8531	MC74HC11F	IC	1	
IC8532	MC74HC86F	IC	1	
IC8533,34	MC74HC574AF	IC	2	
IC8535	VSI0822A	IC	1	
IC8536,37	UPD42505C-50	IC	2	
IC8538	UPD42101G-3	IC	1	
IC8540	MC74HC574AF	IC	1	
IC8541	74F574SJ	IC	1	
IC8542	L29C520PC22	IC	1	
IC8544	MC74HC4051F	IC	1	
IC8545	SN74ALS576B		1	
IC8546	VSI0824A	IC	1	
IC8547-54	MSM514222B3	IC	8	
IC8555	MC74HC574AF	IC	1	
IC8556	VSI0825A	IC	1	
IC8557	VSI0826A	IC	1	
IC8558	MC74HC08AF	IC	1	
IC8560,61	MSM514222B3	IC	2	
IC8562	VSI0819	IC	1	
IC8563	L29C520PC22	IC	1	
IC8564	MC74HC574AF	IC	1	
IC8565	VSI0815A	IC	1	
IC8566	MC74HC574AF	IC	1	
IC8567	SN74AS244NS	IC	1	
IC8570	MSM514222B3	IC	1	
IC8570	74F541SJ	IC	1	
IC8571	MSM514222B3	IC	1	
IC8580,81	SN74AS244NS	IC	2	
IC8590-92	MC74HC574AF	IC	3	
IC8593	VSI0990	IC	1	
IC8594	VSI0991	IC	1	
IC8595	VSI0999	IC	1	
IC8600	MC74HC86F	IC	1	
IC8601-03	UPD42505C-50	IC	3	
IC8604-09	74F399SJ	IC	6	
IC8610	UPD65022F046	IC	1	
IC8611	UPD65042F024	IC	1	
IC8612	MC74HC161AF	IC	1	
IC8613	UPD42101G-3	IC	1	
IC8614	UPD42505C-50	IC	1	
IC8615	MC74HC574AF	IC	1	
IC8616	UPD42505C-50	IC	1	
IC8617,18	MC74HC574AF	IC	2	
IC8619,20	74F283SJ	IC	2	
IC8621	UPD42505C-50	IC	1	
IC8622	UPD65013F101	IC	1	
IC8623	UPD65042F024	IC	1	
IC8624,25	SN74LS399NS	IC	2	
IC8626	VSI0839	IC	1	
IC8627	UPD42101G-3	IC	1	

Ref.No.	Part No.	Part Name & Description	Pcs	Remarks
IC8629	SN74ALS576B		1	
IC8633	VSI0831	IC	1	
IC8634	VSI0833	IC	1	
IC8636	VSI0837	IC	1	
IC8637	VSI0838B	IC	1	
IC8650	74F86SJ	IC	1	
IC8651	SN74AS244NS	IC	1	
IC8700,01	MC74HC574AF	IC	2	
IC8702,03	74F574SJ	IC	2	
IC8704	MC74HC74AF	IC	1	
IC8705-09	UPD42102G-3	IC	5	
IC8710	L7A0378	IC	1	
IC8711	L7A0348	IC	1	
IC8712	74F574SJ	IC	1	
IC8713	SN74AS244NS	IC	1	
IC8714	MC74HC164F	IC	1	
IC8806-08	MC10124L	IC	3	
IC8809,10	74F574SJ	IC	2	
IC8811	SN74AS244NS	IC	1	
IC8813	L7A0341	IC	1	
IC8815	VSI1024	IC	1	
IC8816,17	MC74HC574AF	IC	2	
IC8818	CY7C136-35JC	IC	1	
IC8819	MC74HC574AF	IC	1	
IC8820	IDTFCT821ASO	IC	1	
IC8821	SN74AS244NS	IC	1	
IC8822	MC74HC74AF	IC	1	
IC8823	MC74HC04AF	IC	1	
IC8824	VSI1022	IC	1	
IC8825	MC74HC541AF	IC	1	
IC8851	VSI0845	IC	1	
IC8852	VSI0844A	IC	1	
IC8853,54	UPD42101G-3	IC	2	
IC8855,56	74F574SJ	IC	2	
IC8860-62	MC74HC04AF	IC	3	
IC8900	MC10124L	IC	1	
IC8901	MC10131L	IC	1	
IC8902,03	MC10116L	IC	2	
IC8904	MC10104L	IC	1	
IC8905	MC10115L	IC	1	
IC8906	MC10125L	IC	1	
IC8907	SN74AS244NS	IC	1	
IC8908	MC10124L	IC	1	
IC8909	MC10104L	IC	1	
IC8910	MC10125L	IC	1	
IC8911	MC10115L	IC	1	
IC8912	MC10116L	IC	1	
IC8952,53	SN74LS684NS	IC	2	
IC8954-58	SN74AS244NS	IC	5	
IC8965,66	MC74HC541AF	IC	2	
IC8967,68	MC74HC574AF	IC	2	
IC8969,70	MC74HC540AF	IC	2	
IC8971-74	74F283SJ	IC	4	
IC8976	MC74HC574AF	IC	1	
IC8978	MC74HC574AF	IC	1	
IC8979	MC74HC04AF	IC	1	
IC8980	74F00SJ	IC	1	
IC8982	MC74HC00AF	IC	1	
IC8983	SN74AS244NS	IC	1	
IC8984	VSI0841A	IC	1	
IC8985	VSI0843A	IC	1	
IC8986	MC74HC164F	IC	1	
IC8987-90	UPD42102G-3	IC	4	
IC8991,92	MC74HC574AF	IC	2	
IC8993,94	74F541SJ	IC	2	
IC8995	MC74HC164F	IC	1	
IC8996,97	74F541SJ	IC	2	
IC8998,99	SN74S1051NS	DIODE	2	
ICS8303	VJS3096328	CONNECTOR (FEMALE)	1	
ICS8412	VJS3111	CONNECTOR (FEMALE)	1	
ICS8414	VJS2577	CONNECTOR (FEMALE)	1	
ICS8518	VJS3198A052	CONNECTOR (FEMALE)	1	
ICS8519	VJS3198A044	CONNECTOR (FEMALE)	1	

Ref.No.	Part No.	Part Name & Description	Pcs	Remarks
L8001-05	VLF0931	FILTER	5	
L8006-09	VLQEL05S470J	COIL 47UH	4	
L8011	VLQEL05S680J	COIL 68UH	1	
L8012,13	VLQEL05S221J	COIL 220UH	2	
L8100-03	VLQEL05S470J	COIL 47UH	4	
L8201	VLQEL05S180J	COIL 18UH	1	
L8202	VLQEL05S560J	COIL 56UH	1	
L8203	VLQEL05S221J	COIL 220UH	1	
L8204	VLQEL05S680J	COIL 68UH	1	
L8205	VLQEL05S470J	COIL 47UH	1	
L8206	VLQEL05S680J	COIL 68UH	1	
L8210	VLQEL05S470J	COIL 47UH	1	
P8007,08	VJP3151	CONNECTOR (MALE)	2	
Q8001,02	2SB709-R	TRANSISTOR	2	
Q8003,04	2SK606	TRANSISTOR	2	
Q8100,01	2SC1216	TRANSISTOR	2	
Q8102,03	2SD601-R	TRANSISTOR	2	
Q8104	UN2212	TRANSISTOR	1	
Q8105,06	2SK374-R	TRANSISTOR	2	
Q8200,01	2SB709-R	TRANSISTOR	2	
Q8202,03	2SD601-R	TRANSISTOR	2	
Q8204	2SB709-R	TRANSISTOR	1	
Q8205	2SD601-R	TRANSISTOR	1	
Q8206,07	2SB709-R	TRANSISTOR	2	
Q8208,09	2SC2295-B	TRANSISTOR	2	
Q8800	2SB709-R	TRANSISTOR	1	
		RESISTORS		
R8001	ERJ6GEYJ104	M.RESISTOR CH1/10W 100K	1	
R8002	ERJ6GEYJ684	M.RESISTOR CH1/10W 680K	1	
R8003	ERJ6GEYJ103	M.RESISTOR CH1/10W 10K	1	
R8004,05	ERJ6GEYJ822	M.RESISTOR CH1/10W 8.2K	2	
R8006	ERJ6GEYJ221	M.RESISTOR CH1/10W 220	1	
R8007	ERJ6GEYJ332	M.RESISTOR CH1/10W 3.3K	1	
R8008-10	ERJ6GEYJ222	M.RESISTOR CH1/10W 2.2K	3	
R8011	ERJ6GEYF333	M.RESISTOR CH1/10W 33K	1	
R8012,13	ERJ6GEYJ222	M.RESISTOR CH1/10W 2.2K	2	
R8014	ERJ6GEYJ822	M.RESISTOR CH1/10W 8.2K	1	
R8015	ERJ6GEYJ563	M.RESISTOR CH1/10W 56K	1	
R8016	ERJ6GEYJ273	M.RESISTOR CH1/10W 27K	1	
R8017	ERJ6GEYJ823	M.RESISTOR CH1/10W 82K	1	
R8018	ERJ6GEYJ273	M.RESISTOR CH1/10W 27K	1	
R8019	ERJ6GEYJ682	M.RESISTOR CH1/10W 6.8K	1	
R8020	ERJ6GEYF472	M.RESISTOR CH1/10W 4.7K	1	
R8021	ERJ6GEYJ682	M.RESISTOR CH1/10W 6.8K	1	
R8022	ERJ6GEYJ273	M.RESISTOR CH1/10W 27K	1	
R8024,25	ERJ6GEYJ103	M.RESISTOR CH1/10W 10K	2	
R8026	ERJ6GEYJ101	M.RESISTOR CH1/10W 100	1	
R8027,28	ERJ6GEYJ562	M.RESISTOR CH1/10W 5.6K	2	
R8029	ERJ6GEYJ332	M.RESISTOR CH1/10W 3.3K	1	
R8030	ERJ6GEYJ101	M.RESISTOR CH1/10W 100	1	
R8031	ERJ6GEYJ681	M.RESISTOR CH1/10W 680	1	
R8032	ERJ6GEYF472	M.RESISTOR CH1/10W 4.7K	1	
R8033	ERJ6GEYJ682	M.RESISTOR CH1/10W 6.8K	1	
R8034	ERJ6GEYG153	M.RESISTOR CH1/10W 15K	1	
R8035	ERJ6GEYJ103	M.RESISTOR CH1/10W 10K	1	
R8036	ERJ6GEYJ102	M.RESISTOR CH1/10W 1K	1	
R8037	ERJ6GEYJ103	M.RESISTOR CH1/10W 10K	1	
R8038	ERJ6GEYJ222	M.RESISTOR CH1/10W 2.2K	1	
R8039	ERJ6GEYJ152	M.RESISTOR CH1/10W 1.5K	1	
R8040	ERJ6GEYF333	M.RESISTOR CH1/10W 33K	1	
R8041	ERJ6GEYJ223	M.RESISTOR CH1/10W 22K	1	
R8042	ERJ6GEYJ105	M.RESISTOR CH1/10W 1M	1	
R8043	ERJ6GEYJ273	M.RESISTOR CH1/10W 27K	1	
R8044	ERJ6GEYJ562	M.RESISTOR CH1/10W 5.6K	1	
R8045	ERJ6GEYJ681	M.RESISTOR CH1/10W 680	1	

Ref.No.	Part No.	Part Name & Description	Pcs	Remarks
R8046	ERJ6GEYJ392	M.RESISTOR CH1/10W 3.9K	1	
R8047	ERJ6GEYJ102	M.RESISTOR CH1/10W 1K	1	
R8048	ERJ6GEYJ473	M.RESISTOR CH1/10W 47K	1	
R8049	ERJ6GEYJ223	M.RESISTOR CH1/10W 22K	1	
R8050	ERJ6GEYJ183	M.RESISTOR CH1/10W 18K	1	
R8051,52	ERJ6GEYJ473	M.RESISTOR CH1/10W 47K	2	
R8053,54	ERJ6GEYJ332	M.RESISTOR CH1/10W 3.3K	2	
R8055	ERJ6GEYJ102	M.RESISTOR CH1/10W 1K	1	
R8056	ERJ6GEYJ122	M.RESISTOR CH1/10W 1.2K	1	
R8057	ERJ6GEYJ102	M.RESISTOR CH1/10W 1K	1	
R8060	ERJ6GEYF124	M.RESISTOR CH1/10W 120K	1	
R8061	ERJ6GEYJ101	M.RESISTOR CH1/10W 100	1	
R8062	ERJ6GEYJ221	M.RESISTOR CH1/10W 220	1	
R8063	ERJ6GEYJ184	M.RESISTOR CH1/10W 180K	1	
R8064	ERJ6GEYJ101	M.RESISTOR CH1/10W 100	1	
R8065	ERJ6GEY0R00	C.RESISTOR 1/10W 0	1	
R8070	VRE0034E113	M.RESISTOR CH 1/10W 11K	1	
R8071	ERJ6GEYJ273	M.RESISTOR CH1/10W 27K	1	
R8100	ERJ6GEYJ123	M.RESISTOR CH1/10W 12K	1	
R8101-03	ERJ6GEYJ102	M.RESISTOR CH1/10W 1K	3	
R8104	ERJ6GEYJ562	M.RESISTOR CH1/10W 5.6K	1	
R8105	ERJ6GEYJ103	M.RESISTOR CH1/10W 10K	1	
R8106	VRE0034E821	M.RESISTOR CH 1/10W 820	1	
R8107	VRE0034E392	M.RESISTOR CH 1/10W 3.9K	1	
R8108	VRE0034E103	M.RESISTOR CH 1/10W 10K	1	
R8109,10	ERJ6GEYJ105	M.RESISTOR CH1/10W 1M	2	
R8111	ERJ6GEYG153	M.RESISTOR CH1/10W 15K	1	
R8112	ERJ6GEYJ104	M.RESISTOR CH1/10W 100K	1	
R8113	ERJ6GEYJ103	M.RESISTOR CH1/10W 10K	1	
R8114	ERJ6GEYG153	M.RESISTOR CH1/10W 15K	1	
R8115	ERJ6GEYJ103	M.RESISTOR CH1/10W 10K	1	
R8116	ERJ6GEYJ104	M.RESISTOR CH1/10W 100K	1	
R8117	ERJ6GEYJ563	M.RESISTOR CH1/10W 56K	1	
R8118,19	ERJ6GEYJ562	M.RESISTOR CH1/10W 5.6K	2	
R8120	ERJ6GEYJ102	M.RESISTOR CH1/10W 1K	1	
R8121	ERJ6GEYJ332	M.RESISTOR CH1/10W 3.3K	1	
R8122	ERJ6GEYJ152	M.RESISTOR CH1/10W 1.5K	1	
R8123	ERJ6GEYJ222	M.RESISTOR CH1/10W 2.2K	1	
R8124	ERJ6GEYJ152	M.RESISTOR CH1/10W 1.5K	1	
R8125	ERJ6GEYJ822	M.RESISTOR CH1/10W 8.2K	1	
R8126	ERJ6GEYJ222	M.RESISTOR CH1/10W 2.2K	1	
R8127	ERJ6GEYJ102	M.RESISTOR CH1/10W 1K	1	
R8128	ERJ6GEYJ391	M.RESISTOR CH1/10W 390	1	
R8129,30	ERJ6GEYJ824	M.RESISTOR CH1/10W 820K	2	
R8131	ERJ6GEYJ103	M.RESISTOR CH1/10W 10K	1	
R8132	ERJ6GEYJ223	M.RESISTOR CH1/10W 22K	1	
R8134	ERJ6GEY0R00	C.RESISTOR 1/10W 0	1	
R8136	ERJ6GEY0R00	C.RESISTOR 1/10W 0	1	
R8138	ERJ6GEY0R00	C.RESISTOR 1/10W 0	1	
R8141,42	ERJ6GEYJ822	M.RESISTOR CH1/10W 8.2K	2	
R8143	ERJ6GEYJ512	M.RESISTOR CH 1/10W 5.1K	1	
R8144	ERJ6GEYJ391	M.RESISTOR CH1/10W 390	1	
R8145	ERJ6GEYJ103	M.RESISTOR CH1/10W 10K	1	
R8146,47	VRE0034E622	M.RESISTOR CH 1/10W 6.2K	2	
R8148	VRE0034E681	M.RESISTOR CH 1/10W 680	1	
R8149	ERJ6GEYF333	M.RESISTOR CH1/10W 33K	1	
R8150	ERJ6GEYJ821	M.RESISTOR CH1/10W 820	1	
R8151	ERJ6GEYJ183	M.RESISTOR CH1/10W 18K	1	
R8152	ERJ6GEYJ101	M.RESISTOR CH1/10W 100	1	
R8153	ERJ6GEYJ122	M.RESISTOR CH1/10W 1.2K	1	
R8154	ERJ6GEYJ823	M.RESISTOR CH1/10W 82K	1	
R8155	ERJ6GEYJ105	M.RESISTOR CH1/10W 1M	1	
R8156	ERJ6GEYJ104	M.RESISTOR CH1/10W 100K	1	
R8157,58	ERJ6GEYJ273	M.RESISTOR CH1/10W 27K	2	
R8200	ERJ6GEYJ103	M.RESISTOR CH1/10W 10K	1	
R8201	ERJ6GEYG153	M.RESISTOR CH1/10W 15K	1	
R8202	ERJ6GEYJ122	M.RESISTOR CH1/10W 1.2K	1	
R8203	ERJ6GEYJ821	M.RESISTOR CH1/10W 820	1	
R8204	ERJ6GEYJ471	M.RESISTOR CH1/10W 470	1	
R8205	ERJ6GEYJ272	M.RESISTOR CH1/10W 2.7K	1	
R8206,07	ERJ6GEYJ222	M.RESISTOR CH1/10W 2.2K	2	
R8208	ERJ6GEYJ183	M.RESISTOR CH1/10W 18K	1	
R8209	ERJ6GEYJ821	M.RESISTOR CH1/10W 820	1	
R8211	ERJ6GEYJ102	M.RESISTOR CH1/10W 1K	1	
R8212	ERJ6GEYJ121	M.RESISTOR CH1/10W 120	1	

Ref.No.	Part No.	Part Name & Description	Pcs	Remarks
R8213,14	ERJ6GEYJ102	M.RESISTOR CH1/10W 1K	2	
R8215	ERJ6GEYJ562	M.RESISTOR CH1/10W 5.6K	1	
R8216	ERJ6GEYJ273	M.RESISTOR CH1/10W 27K	1	
R8217	ERJ6GEYJ103	M.RESISTOR CH1/10W 10K	1	
R8218	ERJ6GEYJ101	M.RESISTOR CH1/10W 100	1	
R8219	ERJ6GEYJ103	M.RESISTOR CH1/10W 10K	1	
R8220	ERJ6GEYJ821	M.RESISTOR CH1/10W 820	1	
R8221	ERJ6GEYJ102	M.RESISTOR CH1/10W 1K	1	
R8222,23	ERJ6GEYJ561	M.RESISTOR CH1/10W 560	2	
R8224	ERJ6GEYJ221	M.RESISTOR CH1/10W 220	1	
R8225	ERJ6GEYJ222	M.RESISTOR CH1/10W 2.2K	1	
R8226	ERJ6GEYJ392	M.RESISTOR CH1/10W 3.9K	1	
R8227,28	ERJ6GEYJ221	M.RESISTOR CH1/10W 220	2	
R8229	VRE0034E750	M.RESISTOR CH 1/10W 75	1	
R8230	ERJ6GEYJ682	M.RESISTOR CH1/10W 6.8K	1	
R8231	ERJ6GEYJ562	M.RESISTOR CH1/10W 5.6K	1	
R8232	ERJ6GEYJ103	M.RESISTOR CH1/10W 10K	1	
R8233	ERJ6GEYJ821	M.RESISTOR CH1/10W 820	1	
R8234	ERJ6GEYJ473	M.RESISTOR CH1/10W 47K	1	
R8235	ERJ6GEYJ562	M.RESISTOR CH1/10W 5.6K	1	
R8236,37	ERJ6GEYJ681	M.RESISTOR CH1/10W 680	2	
R8238	ERJ6GEYJ105	M.RESISTOR CH1/10W 1M	1	
R8239	ERJ6GEYJ473	M.RESISTOR CH1/10W 47K	1	
R8240	ERJ6GEYJ222	M.RESISTOR CH1/10W 2.2K	1	
R8241	ERJ6GEYJ102	M.RESISTOR CH1/10W 1K	1	
R8242	ERJ6GEYJ103	M.RESISTOR CH1/10W 10K	1	
R8243	ERJ6GEYJ682	M.RESISTOR CH1/10W 6.8K	1	
R8244	ERJ6GEYJ562	M.RESISTOR CH1/10W 5.6K	1	
R8245	ERJ6GEYJ183	M.RESISTOR CH1/10W 18K	1	
R8246	ERJ6GEYJ821	M.RESISTOR CH1/10W 820	1	
R8247	ERJ6GEYJ334	M.RESISTOR CH1/10W 330K	1	
R8248	ERJ6GEYJ562	M.RESISTOR CH1/10W 5.6K	1	
R8249,50	ERJ6GEYJ681	M.RESISTOR CH1/10W 680	2	
R8251	ERJ6GEYJ105	M.RESISTOR CH1/10W 1M	1	
R8252	ERJ6GEYJ104	M.RESISTOR CH1/10W 100K	1	
R8253	ERJ6GEYJ222	M.RESISTOR CH1/10W 2.2K	1	
R8254	ERJ6GEYJ103	M.RESISTOR CH1/10W 10K	1	
R8255-60	ERJ6GEYJ471	M.RESISTOR CH1/10W 470	6	
R8261	ERJ6GEYJ681	M.RESISTOR CH1/10W 680	1	
R8300-09	ERJ6GEYJ103	M.RESISTOR CH1/10W 10K	10	
R8310	ERJ6GEYJ223	M.RESISTOR CH1/10W 22K	1	
R8312	ERJ6GEY0R00	C.RESISTOR 1/10W 0	1	
R8316	ERJ6GEY0R00	C.RESISTOR 1/10W 0	1	
R8322	ERJ6GEY0R00	C.RESISTOR 1/10W 0	1	
R8323-44	ERJ6GEYJ101	M.RESISTOR CH1/10W 100	22	
R8346	ERJ6GEYJ101	M.RESISTOR CH1/10W 100	1	
R8347	ERJ6GEY0R00	C.RESISTOR 1/10W 0	1	
R8351	ERJ6GEYJ101	M.RESISTOR CH1/10W 100	1	
R8400	ERJ6GEYJ562	M.RESISTOR CH1/10W 5.6K	1	
R8401	ERJ6GEYJ222	M.RESISTOR CH1/10W 2.2K	1	
R8402,03	ERJ6GEYJ103	M.RESISTOR CH1/10W 10K	2	
R8404	ERJ6GEYJ105	M.RESISTOR CH1/10W 1M	1	
R8405	ERJ6GEYJ222	M.RESISTOR CH1/10W 2.2K	1	
R8406,07	ERJ6GEYF472	M.RESISTOR CH1/10W 4.7K	2	
R8408,09	ERJ6GEYJ103	M.RESISTOR CH1/10W 10K	2	
R8410,11	ERJ6GEYJ471	M.RESISTOR CH1/10W 470	2	
R8412	ERJ6GEYJ470	M.RESISTOR CH1/10W 47	1	
R8501-24	ERJ6GEYJ103	M.RESISTOR CH1/10W 10K	24	
R8526,27	ERJ6GEYJ103	M.RESISTOR CH1/10W 10K	2	
R8529-38	ERJ6GEYJ103	M.RESISTOR CH1/10W 10K	10	
R8600-09	ERJ6GEYJ103	M.RESISTOR CH1/10W 10K	10	
R8800-21	ERJ6GEYJ471	M.RESISTOR CH1/10W 470	22	
R8827	ERJ6GEYJ103	M.RESISTOR CH1/10W 10K	1	
R8828	ERJ6GEYJ561	M.RESISTOR CH1/10W 560	1	
R8829	ERJ6GEYJ223	M.RESISTOR CH1/10W 22K	1	
R8830-39	ERJ6GEYJ101	M.RESISTOR CH1/10W 100	10	
R8850-71	ERJ6GEYJ330	M.RESISTOR CH1/10W 33	22	
R8880	ERJ6GEY0R00	C.RESISTOR 1/10W 0	1	
R8900-21	ERJ6GEYJ471	M.RESISTOR CH1/10W 470	22	
R8922	ERJ6GEYJ101	M.RESISTOR CH1/10W 100	1	
R8923,24	ERJ6GEYJ471	M.RESISTOR CH1/10W 470	2	
R8954	ERJ6GEY0R00	C.RESISTOR 1/10W 0	1	

S MOTHER VEP80593A

Ref.No.	Part No.	Part Name & Description	Pcs	Remarks
SW8001-04	VJP1940	CONNECTOR (MALE)	4	
SW8010,11	VJP1940	CONNECTOR (MALE)	2	
SW8100-03	VJP1940	CONNECTOR (MALE)	4	
SW8301	VJP1940	CONNECTOR (MALE)	1	
SW8400,01	VJP1940	CONNECTOR (MALE)	2	
SW8403	VJP1940	CONNECTOR (MALE)	1	
SW8501,02	VJP1940	CONNECTOR (MALE)	2	
SW8550	VJP1940	CONNECTOR (MALE)	1	
SW8600,01	VJP1940	CONNECTOR (MALE)	2	
SW8602	VSS023708	SWITCH	1	
SW8604	VJP1940	CONNECTOR (MALE)	1	
SW8701	VJP1940	CONNECTOR (MALE)	1	
SW8802	VSS0207	SWITCH	1	
SW8860,61	VSS023708	SWITCH	2	
SWS8001-04	VJS1940	CONNECTOR (FEMALE)	4	
SWS8010,11	VJS1940	CONNECTOR (FEMALE)	2	
SWS8100-03	VJS1940	CONNECTOR (FEMALE)	4	
SWS8301	VJS1940	CONNECTOR (FEMALE)	1	
SWS8400	VJS1940	CONNECTOR (FEMALE)	1	
SWS8403	VJS1940	CONNECTOR (FEMALE)	1	
SWS8501,02	VJS1940	CONNECTOR (FEMALE)	2	
SWS8550	VJS1940	CONNECTOR (FEMALE)	1	
SWS8600,01	VJS1940	CONNECTOR (FEMALE)	2	
SWS8604	VJS1940	CONNECTOR (FEMALE)	1	
SWS8701	VJS1940	CONNECTOR (FEMALE)	1	
TP8001-09	VJR0646	TEST POINT	9	
TP8100-08	VJR0646	TEST POINT	9	
TP8200	VJR0646	TEST POINT	1	
TP8300-09	VJR0646	TEST POINT	10	
TP8311,12	VJR0646	TEST POINT	2	
TP8314,15	VJR0646	TEST POINT	2	
TP8400,01	VJR0646	TEST POINT	2	
TP8500-05	VJR0646	TEST POINT	6	
TP8600-05	VJR0646	TEST POINT	6	
TP8950-52	VJR0646	TEST POINT	3	
TP8956-62	VJR0646	TEST POINT	7	
TPG8001,02	VJR0646	TEST POINT	2	
TPG8100-02	VJR0646	TEST POINT	3	
TPG8200	VJR0646	TEST POINT	1	
TPG8300	VJR0646	TEST POINT	1	
TPG8400	VJR0646	TEST POINT	1	
TPG8500	VJR0646	TEST POINT	1	
TPG8600	VJR0646	TEST POINT	1	
VR8001,02	VRV0109B503	V.RESISTOR 50K	2	
VR8003-05	VRV0109B502	V.RESISTOR 5K	3	
VR8100-02	VRV0109B502	V.RESISTOR 5K	3	
VR8103,04	VRV0109B103	V.RESISTOR 10K	2	
VR8105,06	VRV0109B202	V.RESISTOR 2K	2	
VR8107	VRV0109B203	V.RESISTOR 20K	1	
VR8108	VRV0109B103	V.RESISTOR 10K	1	
VR8200	VRV0109B203	V.RESISTOR 20K	1	
VR8201	VRV0109B502	V.RESISTOR 5K	1	
VR8202	VRV0109B202	V.RESISTOR 2K	1	
VR8203	VRV0109B503	V.RESISTOR 50K	1	
VR8204,05	VRV0109B102	V.RESISTOR 1K	2	
VR8206	VRV0109B502	V.RESISTOR 5K	1	
X8001	VSX0081	CRYSTAL OSCILLATOR	1	
X8100	VSX0338	CRYSTAL OSCILLATOR	1	
X8200	VSX0567A	CRYSTAL OSCILLATOR	1	
X8201	VSX0338	CRYSTAL OSCILLATOR	1	
X8400	VSX0156	CRYSTAL OSCILLATOR	1	
X8401	VSX0178	CRYSTAL OSCILLATOR	1	
		MISCELLANEOUS		

Ref.No.	Part No.	Part Name & Description	Pcs	Remarks
	VGQ0291	P.C.BOARD NAME PLATE	1	
	VML2143	CARD PULLER	1	
	VML2144	CARD PULLER	1	
	VMP3048	P.C.BOARD HOLDER ANGLE	2	
	VXA4418	P.C.BOARD SHIELD PLATE	1	
	XNG26E	NUT	4	
	XTV3+6FFR	SCREW	9	
	XYN26+C12	SCREW	4	
	VMZ1935	ISOLATION SHEET	1	
	VEP80593A	P.C.BOARD W/COMPONENT S MOTHER		
P201-18	VJS2899A096	CONNECTOR (FEMALE)	18	
P219	VJP1231T	CONNECTOR (MALE)	1	
P220,21	VJP3080	CONNECTOR (MALE)	2	
P222	VJP2824B004	CONNECTOR (MALE)	1	
P224	VJP1231T	CONNECTOR (MALE)	1	
P226	VJP1147	CONNECTOR (MALE)	1	
P227,28	VJP1230T	CONNECTOR (MALE)	2	
P229,30	VJP1233T	CONNECTOR (MALE)	2	
P231	VJP1230T	CONNECTOR (MALE)	1	
P232	VJP1231T	CONNECTOR (MALE)	1	
P233	VJP3098A032	CONNECTOR (MALE)	1	
P235	VJP1231T	CONNECTOR (MALE)	1	
P236	VJP3083	CONNECTOR (MALE)	1	
P237	VJP1230R	CONNECTOR (MALE)	1	
P238	VJP1233T	CONNECTOR (MALE)	1	
P240	VJP1230T	CONNECTOR (MALE)	1	
P241	VJP3098A026	CONNECTOR (MALE)	1	
P242	VJP3098A032	CONNECTOR (MALE)	1	
P246	VJP3080	CONNECTOR (MALE)	1	
P247	VJP1232T	CONNECTOR (MALE)	1	
P248	VJP2824A003	CONNECTOR (MALE)	1	
P249	VJP1235T	CONNECTOR (MALE)	1	
P253	VJP2824A010	CONNECTOR (MALE)	1	
P255,56	VJP1231T	CONNECTOR (MALE)	2	
P257	VJP1230R	CONNECTOR (MALE)	1	
P258	VJP1230T	CONNECTOR (MALE)	1	
P259	VJP1145T	CONNECTOR (MALE)	1	
P260	VJP3079	CONNECTOR (MALE)	1	
P261	VJP1235T	CONNECTOR (MALE)	1	
P263	VJP3098A040	CONNECTOR (MALE)	1	
P268	VJP1233T	CONNECTOR (MALE)	1	
P269	VJP3080	CONNECTOR (MALE)	1	
P270	VJP1233T	CONNECTOR (MALE)	1	
P272	VJP1234T	CONNECTOR (MALE)	1	
P277	VJP1230T	CONNECTOR (MALE)	1	
P278	VJP1230G	CONNECTOR (MALE)	1	
P290	VJP1236T	CONNECTOR (MALE)	1	
		MISCELLANEOUS		
	VJF0300	BINDER	1	
	VMP3026	P.C.BOARD HOLDER ANGLE	1	
	VMP3027	P.C.BOARD HOLDER ANGLE	1	
	VMP3028	P.C.BOARD HOLDER ANGLE	1	
	XTV26+6F	SCREW	36	
	XTV3+6F	SCREW	12	

S1

S1 EQUALIZER CH0 VEP85021A
S1 SUB VEP87002A

Ref.No.	Part No.	Part Name & Description	Pcs	Remarks
	VEP85021A	P.C.BOARD W/COMPONENT		
		S1 EQUALIZER CH0		
	VEP87002A	P.C.BOARD W/COMPONENT		FOR VEP85021A
		S1 SUB		
		CAPACITORS		
C347	ECUM1H220JCN	C.CAPACITOR CH 50V 22P	1	
C350,51	ECUM1E104ZFN	C.CAPACITOR 25V 0.1U	2	
C5001	ECUM1E104ZFN	C.CAPACITOR 25V 0.1U	1	
C5002	ECEA1CGE471	E.CAPACITOR 16V 470U	1	
C5003,04	ECUM1E104ZFN	C.CAPACITOR 25V 0.1U	2	
C5005	ECEA1CGE471	E.CAPACITOR 16V 470U	1	
C5006,07	ECUM1E104ZFN	C.CAPACITOR 25V 0.1U	2	
C5008	ECEA1CGE471	E.CAPACITOR 16V 470U	1	
C5009,10	ECUM1E104ZFN	C.CAPACITOR 25V 0.1U	2	
C5011	ECEA1CGE471	E.CAPACITOR 16V 470U	1	
C5012	ECUM1E104ZFN	C.CAPACITOR 25V 0.1U	1	
C5013,14	ECA1HXS2R2	E.CAPACITOR 50V 2.2U	2	
C5015	ECUM1E104ZFN	C.CAPACITOR 25V 0.1U	1	
C5016,17	ECUM1H561JCN	C.CAPACITOR CH 50V 560P	2	
C5018	ECUM1E104ZFN	C.CAPACITOR 25V 0.1U	1	
C5020	ECUM1E104ZFN	C.CAPACITOR 25V 0.1U	1	
C5021,22	ECA1HXS2R2	E.CAPACITOR 50V 2.2U	2	
C5023	ECUM1E104ZFN	C.CAPACITOR 25V 0.1U	1	
C5024,25	ECUM1H561JCN	C.CAPACITOR CH 50V 560P	2	
C5026	ECUM1E104ZFN	C.CAPACITOR 25V 0.1U	1	
C5028,29	ECUM1E104ZFN	C.CAPACITOR 25V 0.1U	2	
C5030,31	ECUM1H151JCN	C.CAPACITOR CH 50V 150P	2	
C5032-34	ECUM1E104ZFN	C.CAPACITOR 25V 0.1U	3	
C5035	ECUM1H220JCN	C.CAPACITOR CH 50V 22P	1	
C5036,37	ECUM1E104ZFN	C.CAPACITOR 25V 0.1U	2	
C5038	ECUM1H104KBM	C.CAPACITOR CH 50V 0.1U	1	
C5039-44	ECUM1E104ZFN	C.CAPACITOR 25V 0.1U	6	
C5045	ECUM1H104KBM	C.CAPACITOR CH 50V 0.1U	1	
C5046	VCM0058C021	M.CAPACITOR 20P	1	
C5047	VCM0059F067	M.CAPACITOR 60U	1	
C5048	VCM0059F088	M.CAPACITOR 800U	1	
C5049	VCM0059F230	M.CAPACITOR 23P	1	
C5050,51	ECUM1E104ZFN	C.CAPACITOR 25V 0.1U	2	
C5052	ECUM1H392KBN	C.CAPACITOR CH 50V 3900P	1	
C5053	ECUM1E104ZFN	C.CAPACITOR 25V 0.1U	1	
C5054	ECA1CXS470	E.CAPACITOR 16V 47U	1	
C5055	ECUM1E104ZFN	C.CAPACITOR 25V 0.1U	1	
C5056	ECA1CXS470	E.CAPACITOR 16V 47U	1	
C5057	ECUM1H104KBM	C.CAPACITOR CH 50V 0.1U	1	
C5058-60	ECUM1E104ZFN	C.CAPACITOR 25V 0.1U	3	
C5061,62	ECUM1H104KBM	C.CAPACITOR CH 50V 0.1U	2	
C5063	ECUM1H101JCN	C.CAPACITOR CH 50V 100P	1	
C5064,65	ECUM1E104ZFN	C.CAPACITOR 25V 0.1U	2	
C5066,67	ECUM1H104KBM	C.CAPACITOR CH 50V 0.1U	2	
C5068,69	ECUM1E104ZFN	C.CAPACITOR 25V 0.1U	2	
C5071	ECUM1H104KBM	C.CAPACITOR CH 50V 0.1U	1	
C5072,73	ECUM1E104ZFN	C.CAPACITOR 25V 0.1U	2	
C5074	ECUM1H104KBM	C.CAPACITOR CH 50V 0.1U	1	
C5075-82	ECUM1E104ZFN	C.CAPACITOR 25V 0.1U	8	
C5083	ECUM1H101JCN	C.CAPACITOR CH 50V 100P	1	
C5084	ECUM1E104ZFN	C.CAPACITOR 25V 0.1U	1	
C5085	ECUM1H101JCN	C.CAPACITOR CH 50V 100P	1	
C5086-89	ECUM1E104ZFN	C.CAPACITOR 25V 0.1U	4	
C5090,91	ECUM1H104KBM	C.CAPACITOR CH 50V 0.1U	2	
C5092,93	ECUM1E104ZFN	C.CAPACITOR 25V 0.1U	2	
C5095	ECUM1H104KBM	C.CAPACITOR CH 50V 0.1U	1	
C5096	ECUM1E104ZFN	C.CAPACITOR 25V 0.1U	1	
C5097	ECA1CXS470	E.CAPACITOR 16V 47U	1	
C5098	ECUM1E104ZFN	C.CAPACITOR 25V 0.1U	1	
C5099	ECA1CXS470	E.CAPACITOR 16V 47U	1	
C5100	VCM0058C031	M.CAPACITOR 30P	1	
C5101	VCM0059F056	M.CAPACITOR 5U	1	
C5102	VCM0059F130	M.CAPACITOR 13P	1	
C5103	VCM0060F340	M.CAPACITOR 34P	1	
C5104,05	ECUM1E104ZFN	C.CAPACITOR 25V 0.1U	2	

Ref.No.	Part No.	Part Name & Description	Pcs	Remarks
C5106,07	ECUM1H104KBM	C.CAPACITOR CH 50V 0.1U	2	
C5108-22	ECUM1E104ZFN	C.CAPACITOR 25V 0.1U	15	
C5123,24	ECA1HXS100	E.CAPACITOR 50V 10U	2	
C5125	ECUM1E104ZFN	C.CAPACITOR 25V 0.1U	1	
C5126	ECA1CXS470	E.CAPACITOR 16V 47U	1	
C5127	ECUM1E104ZFN	C.CAPACITOR 25V 0.1U	1	
C5128	ECA1CXS470	E.CAPACITOR 16V 47U	1	
C5129	ECA1HXS100	E.CAPACITOR 50V 10U	1	
C5130	ECUM1H104KBM	C.CAPACITOR CH 50V 0.1U	1	
C5132-34	ECUM1E104ZFN	C.CAPACITOR 25V 0.1U	3	
C5135,36	ECUM1H101JCN	C.CAPACITOR CH 50V 100P	2	
C5137-41	ECUM1E104ZFN	C.CAPACITOR 25V 0.1U	5	
C5143,44	ECUM1E104ZFN	C.CAPACITOR 25V 0.1U	2	
C5145	ECUM1H070DCN	C.CAPACITOR CH 50V 7P	1	
C5147	ECUM1H020CCN	C.CAPACITOR CH 50V 2P	1	
C5204	ECUM1H220JCN	C.CAPACITOR CH 50V 22P	1	
C5208	VCM0058F033	M.CAPACITOR 3000P	1	
C5209	ECUM1H391JCN	C.CAPACITOR CH 50V 390P	1	
C5210	ECUM1E104ZFN	C.CAPACITOR 25V 0.1U	1	
C5300-06	ECUM1E104ZFN	C.CAPACITOR 25V 0.1U	7	
C5307	ECUM1C104KBN	C.CAPACITOR CH 16V 0.1U	1	
C5308	ECA1CXS470	E.CAPACITOR 16V 47U	1	
C5309	ECUM1E104ZFN	C.CAPACITOR 25V 0.1U	1	
C5316,17	ECUM1E104ZFN	C.CAPACITOR 25V 0.1U	2	
C5318	ECA1CXS470	E.CAPACITOR 16V 47U	1	
C5319	ECUM1E104ZFN	C.CAPACITOR 25V 0.1U	1	
C5320	ECEA1CGE471	E.CAPACITOR 16V 470U	1	
C5321-32	ECUM1E104ZFN	C.CAPACITOR 25V 0.1U	12	
C5333	ECA1CXS470	E.CAPACITOR 16V 47U	1	
C5334-41	ECUM1E104ZFN	C.CAPACITOR 25V 0.1U	8	
C5342	ECUM1H020CCN	C.CAPACITOR CH 50V 2P	1	
C5343	ECUM1H102JN	C.CAPACITOR CH 50V 1000P	1	
C5344	ECA1HXS100	E.CAPACITOR 50V 10U	1	
C5345	ECUM1E104ZFN	C.CAPACITOR 25V 0.1U	1	
C5346	ECUM1H820JCN	C.CAPACITOR CH 50V 82P	1	
C5347	ECUM1H560JCN	C.CAPACITOR CH 50V 56P	1	
C5400	ECUM1E104ZFN	C.CAPACITOR 25V 0.1U	1	
C5405	ECUM1E104ZFN	C.CAPACITOR 25V 0.1U	1	
C5500-02	ECUM1E104ZFN	C.CAPACITOR 25V 0.1U	3	
C5503,04	ECUM1H151JCN	C.CAPACITOR CH 50V 150P	2	
C5505-18	ECUM1E104ZFN	C.CAPACITOR 25V 0.1U	14	
C5519	ECUM1H102JN	C.CAPACITOR CH 50V 1000P	1	
C5520-26	ECUM1E104ZFN	C.CAPACITOR 25V 0.1U	7	
C5528	ECUM1H104ZFN	C.CAPACITOR CH 50V 0.1U	1	
C5600-06	ECUM1E104ZFN	C.CAPACITOR 25V 0.1U	7	
C5607	ECUM1H331JCN	C.CAPACITOR CH 50V 330P	1	
C5608,09	ECUM1E104ZFN	C.CAPACITOR 25V 0.1U	2	
C5610	ECA1HXS100	E.CAPACITOR 50V 10U	1	
C5611	ECUM1H560JCN	C.CAPACITOR CH 50V 56P	1	
C5612-18	ECUM1E104ZFN	C.CAPACITOR 25V 0.1U	7	
C5619	ECUM1E153KBN	C.CAPACITOR CH 25V 0.015U	1	
C5620-22	ECUM1E104ZFN	C.CAPACITOR 25V 0.1U	3	
C5623	ECA1CXS470	E.CAPACITOR 16V 47U	1	
C5624	ECUM1E104ZFN	C.CAPACITOR 25V 0.1U	1	
C5625	ECA1CXS470	E.CAPACITOR 16V 47U	1	
C5626-30	ECUM1E104ZFN	C.CAPACITOR 25V 0.1U	5	
C5631	ECUM1H331JCN	C.CAPACITOR CH 50V 330P	1	
C5632,33	ECUM1E104ZFN	C.CAPACITOR 25V 0.1U	2	
C5634	ECA1HXS100	E.CAPACITOR 50V 10U	1	
C5635	ECUM1H561JCN	C.CAPACITOR CH 50V 560P	1	
C5636-42	ECUM1E104ZFN	C.CAPACITOR 25V 0.1U	7	
C5643	ECUM1E153KBN	C.CAPACITOR CH 25V 0.015U	1	
C5644-58	ECUM1E104ZFN	C.CAPACITOR 25V 0.1U	15	
CN5001	VJP1230R	CONNECTOR (MALE)	1	
CN5002	VJP1230G	CONNECTOR (MALE)	1	
D5301	FC54M-5	DIODE	1	
D5302	MA157	DIODE	1	
D5401	MA151K	DIODE	1	
D5600	MA151K	DIODE	1	

Ref.No.	Part No.	Part Name & Description	Pcs	Remarks
D5601	MA3030	DIODE	1	
D5602-05	MA151K	DIODE	4	
D5606	MA3030	DIODE	1	
D5607-09	MA151K	DIODE	3	
DL5001	VLD0220	DELAY	1	
DL5002,03	VLD0219	DELAY	2	
FL5001-04	VLF0931	FILTER	4	
IC5001,02	UPC1663G	IC	2	
IC5003	MC1495L	IC	1	
IC5004	UPC1663G	IC	1	
IC5005-07	MC1495L	IC	3	
IC5008,09	UPC1663G	IC	2	
IC5010	AD96685BQ	IC	1	
IC5011	UPC1663G	IC	1	
IC5300,01	MC10H116L	IC	2	
IC5302	MC10H107L	IC	1	
IC5303	MB813AZ	IC	1	
IC5304	MC10H116L	IC	1	
IC5306	UPC78L08J	IC	1	
IC5307	UPC79L08J	IC	1	
IC5308	TL082CPS	IC	1	
IC5309	LM337T	IC	1	
IC5400	MC74HC04AF	IC	1	
IC5402	MC14053BF	IC	1	
IC5500	UPC1663G	IC	1	
IC5501	NJM149GM	IC	1	
IC5502	TL082CPS	IC	1	
IC5503	NJM360M	IC	1	
IC5600	TL082CPS	IC	1	
IC5601	NJM1496M	IC	1	
IC5602	TL084CNS	IC	1	
IC5603	NJM1496M	IC	1	
IC5604	TL084CNS	IC	1	
IC5605	MC14053BF	IC	1	
L301	VLQ0188MR56N	COIL 0.56UH	1	
L5001,02	VLQEL06F100J	COIL 10UH	2	
L5003	VLQ0171K4R7N	COIL 4.7UH	1	
L5004,05	VLQEL06F100J	COIL 10UH	2	
L5006,07	VLQ0171K4R7N	COIL 4.7UH	2	
L5008	VLQ0171M2R2N	COIL 2.2UH	1	
L5009,10	VLQEL06F100J	COIL 10UH	2	
L5011	VLQ0171K4R7N	COIL 4.7UH	1	
L5012-14	VLQ0171M1R8N	COIL 1.8UH	3	
L5300	VLQEL06F100J	COIL 10UH	1	
L5500,01	VLQ0188KR39N	COIL 0.39UH	2	
L5600,01	VLQEL06F100J	COIL 10UH	2	
P201,02	VJP3151	CONNECTOR (MALE)	2	
Q309,10	2SK198-P	TRANSISTOR	2	
Q5001-04	XN6537	TRANSISTOR	4	
Q5005	XN5531	TRANSISTOR	1	
Q5006,07	2SA1738	TRANSISTOR	2	
Q5008	XN5531	TRANSISTOR	1	
Q5009-11	2SC3130	TRANSISTOR	3	
Q5012-16	2SC2480-S	TRANSISTOR	5	
Q5017-19	2SA1022-C	TRANSISTOR	3	
Q5020,21	2SC3130	TRANSISTOR	2	
Q5022,23	2SD1938-T	TRANSISTOR	2	

Ref.No.	Part No.	Part Name & Description	Pcs	Remarks
Q5300	XN5531	TRANSISTOR	1	
Q5301	2SC2295-C	TRANSISTOR	1	
Q5302,03	XN6543	TRANSISTOR	2	
Q5304	2SC2295-C	TRANSISTOR	1	
Q5305	2SA1022-C	TRANSISTOR	1	
Q5306	2SC2295-C	TRANSISTOR	1	
Q5307	2SA1022-C	TRANSISTOR	1	
Q5308	2SC2295-C	TRANSISTOR	1	
Q5402	2SD601A-R	TRANSISTOR	1	
Q5403,04	2SD1938-T	TRANSISTOR	2	
Q5500-02	2SC3130	TRANSISTOR	3	
Q5503	2SC2295-C	TRANSISTOR	1	
Q5504	2SA1022-C	TRANSISTOR	1	
Q5600	XN5531	TRANSISTOR	1	
Q5601,02	2SC3130	TRANSISTOR	2	
Q5603	XN6435	TRANSISTOR	1	
Q5604	2SC3130	TRANSISTOR	1	
Q5605	XN5531	TRANSISTOR	1	
Q5606-08	2SC3130	TRANSISTOR	3	
Q5609	XN6435	TRANSISTOR	1	
Q5610,11	2SA1022-C	TRANSISTOR	2	
		RESISTORS		
R375	ERJ6GEYJ820	M.RESISTOR CH1/10W 82	1	
R5001,02	VRE0034E510	M.RESISTOR CH 1/10W 51	2	
R5003,04	ERJ6GEYJ182	M.RESISTOR CH1/10W 1.8K	2	
R5005	ERJ6GEYJ560	M.RESISTOR CH1/10W 56	1	
R5006,07	ERJ6GEYJ470	M.RESISTOR CH1/10W 47	2	
R5008,09	ERJ6GEYJ100	M.RESISTOR CH1/10W 10	2	
R5010,11	ERJ6GEYJ152	M.RESISTOR CH1/10W 1.5K	2	
R5012	ERJ6GEYJ101	M.RESISTOR CH1/10W 100	1	
R5013,14	ERJ6GEYJ470	M.RESISTOR CH1/10W 47	2	
R5015,16	ERJ6GEYG151	M.RESISTOR CH1/10W 150	2	
R5017	ERJ6GEYJ102	M.RESISTOR CH1/10W 1K	1	
R5018	ERJ6GEYJ221	M.RESISTOR CH1/10W 220	1	
R5019	ERJ6GEYJ470	M.RESISTOR CH1/10W 47	1	
R5020,21	VRE0034E510	M.RESISTOR CH 1/10W 51	2	
R5022	ERJ6GEYJ182	M.RESISTOR CH1/10W 1.8K	1	
R5023	ERJ6GEYJ152	M.RESISTOR CH1/10W 1.5K	1	
R5024	ERJ6GEYJ560	M.RESISTOR CH1/10W 56	1	
R5025,26	ERJ6GEYJ470	M.RESISTOR CH1/10W 47	2	
R5027,28	ERJ6GEYJ100	M.RESISTOR CH1/10W 10	2	
R5029,30	ERJ6GEYJ152	M.RESISTOR CH1/10W 1.5K	2	
R5031	ERJ6GEYJ101	M.RESISTOR CH1/10W 100	1	
R5032,33	ERJ6GEYJ470	M.RESISTOR CH1/10W 47	2	
R5034	ERJ6GEYJ682	M.RESISTOR CH1/10W 6.8K	1	
R5035	ERJ6GEYJ272	M.RESISTOR CH1/10W 2.7K	1	
R5036	ERJ6GEYG151	M.RESISTOR CH1/10W 150	1	
R5037	ERJ6GEYJ272	M.RESISTOR CH1/10W 2.7K	1	
R5038	ERJ6GEYJ682	M.RESISTOR CH1/10W 6.8K	1	
R5039,40	ERJ6GEYJ273	M.RESISTOR CH1/10W 27K	2	
R5041,42	ERJ6GEYJ560	M.RESISTOR CH1/10W 56	2	
R5043,44	ERJ6GEYJ122	M.RESISTOR CH1/10W 1.2K	2	
R5045	ERJ6GEYJ101	M.RESISTOR CH1/10W 100	1	
R5046	ERJ6GEYJ470	M.RESISTOR CH1/10W 47	1	
R5047	ERJ6GEYJ560	M.RESISTOR CH1/10W 56	1	
R5048	ERJ6GEYJ681	M.RESISTOR CH1/10W 680	1	
R5049,50	ERJ6GEYJ470	M.RESISTOR CH1/10W 47	2	
R5051	ERJ6GEYJ101	M.RESISTOR CH1/10W 100	1	
R5052	ERJ6GEYJ331	M.RESISTOR CH1/10W 330	1	
R5053	ERJ6GEYJ470	M.RESISTOR CH1/10W 47	1	
R5054	ERJ6GEYF472	M.RESISTOR CH1/10W 4.7K	1	
R5055,56	ERJ6GEYJ471	M.RESISTOR CH1/10W 470	2	
R5057	ERJ6GEYJ331	M.RESISTOR CH1/10W 330	1	
R5058	ERJ6GEYJ101	M.RESISTOR CH1/10W 100	1	
R5059,60	ERJ6GEYJ331	M.RESISTOR CH1/10W 330	2	
R5061,62	ERJ6GEYJ103	M.RESISTOR CH1/10W 10K	2	
R5063	ERJ6GEYJ470	M.RESISTOR CH1/10W 47	1	
R5064	ERJ6GEYJ560	M.RESISTOR CH1/10W 56	1	
R5065	ERJ6GEYJ561	M.RESISTOR CH1/10W 560	1	
R5066,67	VRE0034E510	M.RESISTOR CH 1/10W 51	2	
R5068	ERJ6GEYJ560	M.RESISTOR CH1/10W 56	1	
R5069	ERJ6GEYJ102	M.RESISTOR CH1/10W 1K	1	

Ref.No.	Part No.	Part Name & Description	Pcs	Remarks
R5070	ERJ6GEYF472	M.RESISTOR CH1/10W 4.7K	1	
R5071	ERJ6GEYJ470	M.RESISTOR CH1/10W 47	1	
R5072	ERJ6GEYJ101	M.RESISTOR CH1/10W 100	1	
R5074	ERJ6GEYJ101	M.RESISTOR CH1/10W 100	1	
R5075	ERJ6GEYF472	M.RESISTOR CH1/10W 4.7K	1	
R5076	ERJ6GEYJ390	M.RESISTOR CH1/10W 39	1	
R5077	ERJ6GEYF472	M.RESISTOR CH1/10W 4.7K	1	
R5078	ERJ6GEYJ390	M.RESISTOR CH1/10W 39	1	
R5079	ERJ6GEYG151	M.RESISTOR CH1/10W 150	1	
R5080	ERJ6GEYJ391	M.RESISTOR CH1/10W 390	1	
R5081,82	ERJ6GEYJ471	M.RESISTOR CH1/10W 470	2	
R5083	ERJ8GCYJ221	M.RESISTOR CH 1/8W 220	1	
R5084	ERJ6GEYF472	M.RESISTOR CH1/10W 4.7K	1	
R5085	ERJ6GEYJ390	M.RESISTOR CH1/10W 39	1	
R5086	ERJ8GCYJ221	M.RESISTOR CH 1/8W 220	1	
R5087	ERJ6GEYF472	M.RESISTOR CH1/10W 4.7K	1	
R5088	ERJ6GEYJ390	M.RESISTOR CH1/10W 39	1	
R5089	ERJ6GEYJ101	M.RESISTOR CH1/10W 100	1	
R5090	ERJ6GEYJ390	M.RESISTOR CH1/10W 39	1	
R5091	ERJ6GEYJ102	M.RESISTOR CH1/10W 1K	1	
R5092	ERJ6GEYJ392	M.RESISTOR CH1/10W 3.9K	1	
R5093	ERJ6GEYJ101	M.RESISTOR CH1/10W 100	1	
R5094	ERJ6GEYJ331	M.RESISTOR CH1/10W 330	1	
R5095	ERJ6GEYJ392	M.RESISTOR CH1/10W 3.9K	1	
R5096,97	ERJ6GEYJ121	M.RESISTOR CH1/10W 120	2	
R5098,99	ERJ6GEYF472	M.RESISTOR CH1/10W 4.7K	2	
R5100,01	ERJ6GEYJ390	M.RESISTOR CH1/10W 39	2	
R5102	ERJ6GEYG151	M.RESISTOR CH1/10W 150	1	
R5103	ERJ6GEYJ391	M.RESISTOR CH1/10W 390	1	
R5104,05	ERJ6GEYJ471	M.RESISTOR CH1/10W 470	2	
R5106	ERJ8GCYJ221	M.RESISTOR CH 1/8W 220	1	
R5108	ERJ6GEYJ470	M.RESISTOR CH1/10W 47	1	
R5109	ERJ8GCYJ221	M.RESISTOR CH 1/8W 220	1	
R5110	ERJ6GEYF472	M.RESISTOR CH1/10W 4.7K	1	
R5111	ERJ6GEYJ470	M.RESISTOR CH1/10W 47	1	
R5113,14	ERJ6GEYJ101	M.RESISTOR CH1/10W 100	2	
R5115	ERJ6GEYJ222	M.RESISTOR CH1/10W 2.2K	1	
R5116	ERJ6GEYJ392	M.RESISTOR CH1/10W 3.9K	1	
R5117	ERJ6GEYJ101	M.RESISTOR CH1/10W 100	1	
R5118	ERJ6GEYJ222	M.RESISTOR CH1/10W 2.2K	1	
R5119	ERJ6GEYJ101	M.RESISTOR CH1/10W 100	1	
R5120	ERJ6GEYJ222	M.RESISTOR CH1/10W 2.2K	1	
R5121	ERJ6GEYJ101	M.RESISTOR CH1/10W 100	1	
R5122	ERJ6GEYJ222	M.RESISTOR CH1/10W 2.2K	1	
R5123	ERJ6GEYJ101	M.RESISTOR CH1/10W 100	1	
R5124	ERJ6GEYJ332	M.RESISTOR CH1/10W 3.3K	1	
R5125	ERJ6GEYJ222	M.RESISTOR CH1/10W 2.2K	1	
R5126,27	ERJ6GEYJ390	M.RESISTOR CH1/10W 39	2	
R5128	ERJ6GEYJ101	M.RESISTOR CH1/10W 100	1	
R5129	ERJ6GEYJ122	M.RESISTOR CH1/10W 1.2K	1	
R5130	ERJ6GEYJ102	M.RESISTOR CH1/10W 1K	1	
R5131	ERJ6GEYJ392	M.RESISTOR CH1/10W 3.9K	1	
R5132	ERJ6GEYJ102	M.RESISTOR CH1/10W 1K	1	
R5133	ERJ6GEYJ331	M.RESISTOR CH1/10W 330	1	
R5134	ERJ6GEYJ392	M.RESISTOR CH1/10W 3.9K	1	
R5135,36	ERJ6GEYJ390	M.RESISTOR CH1/10W 39	2	
R5137	ERJ6GEYJ101	M.RESISTOR CH1/10W 100	1	
R5138	ERJ6GEYJ390	M.RESISTOR CH1/10W 39	1	
R5139	ERJ6GEYJ102	M.RESISTOR CH1/10W 1K	1	
R5140	ERJ6GEYJ392	M.RESISTOR CH1/10W 3.9K	1	
R5141	ERJ6GEYJ102	M.RESISTOR CH1/10W 1K	1	
R5142	ERJ6GEYG151	M.RESISTOR CH1/10W 150	1	
R5143	ERJ6GEYJ392	M.RESISTOR CH1/10W 3.9K	1	
R5144,45	ERJ6GEYJ390	M.RESISTOR CH1/10W 39	2	
R5146	ERJ6GEYF333	M.RESISTOR CH1/10W 33K	1	
R5147	ERJ6GEYJ392	M.RESISTOR CH1/10W 3.9K	1	
R5148	ERJ6GEYJ390	M.RESISTOR CH1/10W 39	1	
R5149	ERJ6GEYJ471	M.RESISTOR CH1/10W 470	1	
R5150	ERJ6GEYJ392	M.RESISTOR CH1/10W 3.9K	1	
R5151	ERJ6GEYJ102	M.RESISTOR CH1/10W 1K	1	
R5152	ERJ6GEYJ331	M.RESISTOR CH1/10W 330	1	
R5153	ERJ6GEYJ392	M.RESISTOR CH1/10W 3.9K	1	
R5155,56	ERJ6GEYG181	M.RESISTOR CH1/10W 180	2	
R5157,58	ERJ6GEYJ392	M.RESISTOR CH1/10W 3.9K	2	
R5159,60	ERJ6GEYJ390	M.RESISTOR CH1/10W 39	2	

Ref.No.	Part No.	Part Name & Description	Pcs	Remarks
R5161	ERJ6GEYG151	M.RESISTOR CH1/10W 150	1	
R5162	ERJ6GEYJ391	M.RESISTOR CH1/10W 390	1	
R5163,64	ERJ6GEYJ471	M.RESISTOR CH1/10W 470	2	
R5165	ERJ8GCYJ221	M.RESISTOR CH 1/8W 220	1	
R5166	ERJ6GEYJ470	M.RESISTOR CH1/10W 47	1	
R5168	ERJ8GCYJ221	M.RESISTOR CH 1/8W 220	1	
R5169	ERJ6GEYF472	M.RESISTOR CH1/10W 4.7K	1	
R5170	ERJ6GEYJ470	M.RESISTOR CH1/10W 47	1	
R5172	ERJ6GEYJ470	M.RESISTOR CH1/10W 47	1	
R5173,74	ERJ6GEYJ471	M.RESISTOR CH1/10W 470	2	
R5175,76	ERJ8GCYJ331	M.RESISTOR CH 1/8W 330	2	
R5177-80	ERJ6GEYF472	M.RESISTOR CH1/10W 4.7K	4	
R5181,82	ERJ8GCYJ221	M.RESISTOR CH 1/8W 220	2	
R5183,84	VRE0034E510	M.RESISTOR CH 1/10W 51	2	
R5185	ERJ6GEYJ560	M.RESISTOR CH1/10W 56	1	
R5186	ERJ6GEYJ122	M.RESISTOR CH1/10W 1.2K	1	
R5187	ERJ6GEYJ101	M.RESISTOR CH1/10W 100	1	
R5188	ERJ6GEYJ471	M.RESISTOR CH1/10W 470	1	
R5189	ERJ6GEYJ101	M.RESISTOR CH1/10W 100	1	
R5190	ERJ6GEYF472	M.RESISTOR CH1/10W 4.7K	1	
R5191	ERJ6GEYJ470	M.RESISTOR CH1/10W 47	1	
R5192	ERJ6GEYJ471	M.RESISTOR CH1/10W 470	1	
R5193	ERJ6GEYJ101	M.RESISTOR CH1/10W 100	1	
R5194	ERJ6GEYJ470	M.RESISTOR CH1/10W 47	1	
R5195	ERJ6GEYJ101	M.RESISTOR CH1/10W 100	1	
R5196	ERJ6GEYJ470	M.RESISTOR CH1/10W 47	1	
R5197,98	ERJ8GCYJ221	M.RESISTOR CH 1/8W 220	2	
R5199	ERJ6GEYF472	M.RESISTOR CH1/10W 4.7K	1	
R5200	VRE0034E750	M.RESISTOR CH 1/10W 75	1	
R5201	ERJ6GEYJ101	M.RESISTOR CH1/10W 100	1	
R5202	ERJ6GEYJ102	M.RESISTOR CH1/10W 1K	1	
R5203	ERJ6GEYJ101	M.RESISTOR CH1/10W 100	1	
R5204	ERJ6GEYJ102	M.RESISTOR CH1/10W 1K	1	
R5205,06	ERJ6GEYG680	M.RESISTOR CH1/10W 68	2	
R5207	ERJ6GEYJ470	M.RESISTOR CH1/10W 47	1	
R5208	ERJ6GEYJ221	M.RESISTOR CH1/10W 220	1	
R5209,10	ERJ6GEYG151	M.RESISTOR CH1/10W 150	2	
R5211	ERJ6GEYJ102	M.RESISTOR CH1/10W 1K	1	
R5212	ERJ6GEYJ101	M.RESISTOR CH1/10W 100	1	
R5213	ERJ6GEYJ682	M.RESISTOR CH1/10W 6.8K	1	
R5214,15	ERJ6GEYJ390	M.RESISTOR CH1/10W 39	2	
R5216-22	ERJ6GEY0R00	C.RESISTOR 1/10W 0	7	
R5223	ERJ6GEYJ470	M.RESISTOR CH1/10W 47	1	
R5224,25	ERJ6GEY0R00	C.RESISTOR 1/10W 0	2	
R5226	ERJ6GEYJ150	M.RESISTOR CH1/10W 15	1	
R5227	ERJ6GEYJ470	M.RESISTOR CH1/10W 47	1	
R5300-02	ERJ6GEYJ101	M.RESISTOR CH1/10W 100	3	
R5303,04	ERJ6GEYJ391	M.RESISTOR CH1/10W 390	2	
R5305-09	ERJ6GEYJ101	M.RESISTOR CH1/10W 100	5	
R5310,11	ERJ6GEYJ330	M.RESISTOR CH1/10W 33	2	
R5312,13	ERJ6GEYJ561	M.RESISTOR CH1/10W 560	2	
R5314,15	ERJ6GEYJ330	M.RESISTOR CH1/10W 33	2	
R5318,19	VRE0034E101	M.RESISTOR CH 1/10W 100	2	
R5320,21	ERJ6GEYF472	M.RESISTOR CH1/10W 4.7K	2	
R5322	ERJ6GEYJ102	M.RESISTOR CH1/10W 1K	1	
R5323	VRE0034E510	M.RESISTOR CH 1/10W 51	1	
R5324	VRE0034E101	M.RESISTOR CH 1/10W 100	1	
R5325	VRE0034E510	M.RESISTOR CH 1/10W 51	1	
R5326	VRE0034E101	M.RESISTOR CH 1/10W 100	1	
R5327	ERJ6GEYJ271	M.RESISTOR CH1/10W 270	1	
R5329	ERJ6GEYJ271	M.RESISTOR CH1/10W 270	1	
R5331,32	ERJ6GEYJ101	M.RESISTOR CH1/10W 100	2	
R5335-42	ERJ6GEYJ101	M.RESISTOR CH1/10W 100	8	
R5343,44	ERJ6GEYJ331	M.RESISTOR CH1/10W 330	2	
R5345,46	VRE0034E510	M.RESISTOR CH 1/10W 51	2	
R5347,48	ERJ6GEYJ331	M.RESISTOR CH1/10W 330	2	
R5349,50	VRE0034E510	M.RESISTOR CH 1/10W 51	2	
R5351	ERJ6GEYJ101	M.RESISTOR CH1/10W 100	1	
R5352	ERJ6GEYJ562	M.RESISTOR CH1/10W 5.6K	1	
R5353	VRE0034E512	M.RESISTOR CH 1/10W 5.1K	1	
R5354	ERJ6GEYJ821	M.RESISTOR CH1/10W 820	1	
R5355	ERJ6GEYJ562	M.RESISTOR CH1/10W 5.6K	1	
R5356,57	ERJ6GEYJ103	M.RESISTOR CH1/10W 10K	2	
R5358	ERJ6GEYJ101	M.RESISTOR CH1/10W 100	1	
R5359	ERJ6GEYJ223	M.RESISTOR CH1/10W 22K	1	

Ref.No.	Part No.	Part Name & Description	Pcs	Remarks
R5360	ERG2SJ220	M.RESISTOR 2W 22	1	
R5361	ERJ6GEYJ121	M.RESISTOR CH1/10W 120	1	
R5362	ERJ6GEYJ820	M.RESISTOR CH1/10W 82	1	
R5363	ERJ6GEYJ221	M.RESISTOR CH1/10W 220	1	
R5364,65	VRE0034E750	M.RESISTOR CH 1/10W 75	2	
R5366	ERJ6GEYJ102	M.RESISTOR CH1/10W 1K	1	
R5368	ERJ6GEYJ101	M.RESISTOR CH1/10W 100	1	
R5369	ERJ6GEY0R00	C.RESISTOR 1/10W 0	1	
R5372,73	ERJ6GEYJ101	M.RESISTOR CH1/10W 100	2	
R5374	ERJ6GEYJ330	M.RESISTOR CH1/10W 33	1	
R5400	ERJ6GEYF472	M.RESISTOR CH1/10W 4.7K	1	
R5401-03	ERJ6GEYJ103	M.RESISTOR CH1/10W 10K	3	
R5411	ERJ6GEYJ101	M.RESISTOR CH1/10W 100	1	
R5412,13	ERJ6GEYF472	M.RESISTOR CH1/10W 4.7K	2	
R5414,15	ERJ6GEYJ103	M.RESISTOR CH1/10W 10K	2	
R5416	ERJ6GEYJ183	M.RESISTOR CH1/10W 18K	1	
R5500	ERJ6GEYJ101	M.RESISTOR CH1/10W 100	1	
R5501	ERJ6GEYJ560	M.RESISTOR CH1/10W 56	1	
R5502	ERJ6GEYJ561	M.RESISTOR CH1/10W 560	1	
R5503,04	VRE0034E750	M.RESISTOR CH 1/10W 75	2	
R5505,06	ERJ6GEYJ470	M.RESISTOR CH1/10W 47	2	
R5508,09	ERJ6GEYJ331	M.RESISTOR CH1/10W 330	2	
R5510,11	ERJ6GEYJ102	M.RESISTOR CH1/10W 1K	2	
R5512-14	ERJ6GEYJ560	M.RESISTOR CH1/10W 56	3	
R5515,16	ERJ6GEYJ562	M.RESISTOR CH1/10W 5.6K	2	
R5517-21	ERJ6GEYJ102	M.RESISTOR CH1/10W 1K	5	
R5522	ERJ6GEYJ821	M.RESISTOR CH1/10W 820	1	
R5523-26	ERJ6GEYJ560	M.RESISTOR CH1/10W 56	4	
R5527	ERJ6GEYJ822	M.RESISTOR CH1/10W 8.2K	1	
R5528	ERJ6GEYJ392	M.RESISTOR CH1/10W 3.9K	1	
R5530	ERJ6GEYJ392	M.RESISTOR CH1/10W 3.9K	1	
R5531	ERJ6GEYJ562	M.RESISTOR CH1/10W 5.6K	1	
R5532,33	ERJ6GEYJ102	M.RESISTOR CH1/10W 1K	2	
R5534-37	ERJ6GEYJ103	M.RESISTOR CH1/10W 10K	4	
R5538	ERJ6GEYJ101	M.RESISTOR CH1/10W 100	1	
R5539	ERJ6GEYJ821	M.RESISTOR CH1/10W 820	1	
R5540	ERJ6GEYJ123	M.RESISTOR CH1/10W 12K	1	
R5541	VRE0034E750	M.RESISTOR CH 1/10W 75	1	
R5542	ERJ6GEYJ122	M.RESISTOR CH1/10W 1.2K	1	
R5543	ERJ6GEY0R00	C.RESISTOR 1/10W 0	1	
R5544	ERJ6GEYJ101	M.RESISTOR CH1/10W 100	1	
R5545	ERJ6GEYJ392	M.RESISTOR CH1/10W 3.9K	1	
R5547	ERJ6GEYJ222	M.RESISTOR CH1/10W 2.2K	1	
R5548	ERJ6GEYJ101	M.RESISTOR CH1/10W 100	1	
R5600,01	ERJ6GEYJ103	M.RESISTOR CH1/10W 10K	2	
R5602-04	ERJ6GEYJ562	M.RESISTOR CH1/10W 5.6K	3	
R5605	ERJ6GEYJ101	M.RESISTOR CH1/10W 100	1	
R5606,07	ERJ6GEYJ561	M.RESISTOR CH1/10W 560	2	
R5608,09	ERJ6GEYJ560	M.RESISTOR CH1/10W 56	2	
R5610	ERDS2TJ102	C.RESISTOR 1/4W 1K	1	
R5611	ERDS2TJ101	C.RESISTOR 1/4W 100	1	
R5612	ERJ6GEYJ101	M.RESISTOR CH1/10W 100	1	
R5613	ERDS2TJ222	C.RESISTOR 1/4W 2.2K	1	
R5614-17	ERJ6GEYJ101	M.RESISTOR CH1/10W 100	4	
R5618	ERDS2TJ152	C.RESISTOR 1/4W 1.5K	1	
R5619	ERJ6GEYG151	M.RESISTOR CH1/10W 150	1	
R5620,21	ERJ6GEYJ470	M.RESISTOR CH1/10W 47	2	
R5622,23	ERJ6GEYJ102	M.RESISTOR CH1/10W 1K	2	
R5624	ERJ6GEYG151	M.RESISTOR CH1/10W 150	1	
R5625,26	ERJ6GEYJ102	M.RESISTOR CH1/10W 1K	2	
R5627	ERJ6GEYJ471	M.RESISTOR CH1/10W 470	1	
R5628	ERJ6GEYJ223	M.RESISTOR CH1/10W 22K	1	
R5629	ERJ6GEYJ331	M.RESISTOR CH1/10W 330	1	
R5630,31	ERJ6GEYJ471	M.RESISTOR CH1/10W 470	2	
R5632,33	ERJ6GEYJ562	M.RESISTOR CH1/10W 5.6K	2	
R5634-37	ERJ6GEYJ103	M.RESISTOR CH1/10W 10K	4	
R5638	ERJ6GEYJ102	M.RESISTOR CH1/10W 1K	1	
R5639	ERJ6GEYJ682	M.RESISTOR CH1/10W 6.8K	1	
R5640	ERJ6GEYJ123	M.RESISTOR CH1/10W 12K	1	
R5641,42	ERJ6GEYJ102	M.RESISTOR CH1/10W 1K	2	
R5643,44	ERJ6GEYJ330	M.RESISTOR CH1/10W 33	2	
R5645	ERJ6GEYJ390	M.RESISTOR CH1/10W 39	1	
R5646-49	ERJ6GEYJ101	M.RESISTOR CH1/10W 100	4	
R5650,51	ERJ6GEYJ103	M.RESISTOR CH1/10W 10K	2	
R5652-54	ERJ6GEYJ562	M.RESISTOR CH1/10W 5.6K	3	

Ref.No.	Part No.	Part Name & Description	Pcs	Remarks
R5655	ERJ6GEYJ101	M.RESISTOR CH1/10W 100	1	
R5656,57	ERJ6GEYJ561	M.RESISTOR CH1/10W 560	2	
R5658,59	ERJ6GEYJ560	M.RESISTOR CH1/10W 56	2	
R5670	ERDS2TJ102	C.RESISTOR 1/4W 1K	1	
R5671	ERDS2TJ101	C.RESISTOR 1/4W 100	1	
R5672	ERJ6GEYJ101	M.RESISTOR CH1/10W 100	1	
R5673	ERDS2TJ222	C.RESISTOR 1/4W 2.2K	1	
R5674,75	ERJ6GEYJ101	M.RESISTOR CH1/10W 100	2	
R5677,78	ERJ6GEYJ101	M.RESISTOR CH1/10W 100	2	
R5679	ERDS2TJ152	C.RESISTOR 1/4W 1.5K	1	
R5680	ERJ6GEYJ101	M.RESISTOR CH1/10W 100	1	
R5681,82	ERJ6GEYJ102	M.RESISTOR CH1/10W 1K	2	
R5683,84	ERJ6GEYJ470	M.RESISTOR CH1/10W 47	2	
R5685	ERJ6GEYJ471	M.RESISTOR CH1/10W 470	1	
R5686	ERJ6GEYJ223	M.RESISTOR CH1/10W 22K	1	
R5687,88	ERJ6GEYJ471	M.RESISTOR CH1/10W 470	2	
R5689	ERJ6GEYJ331	M.RESISTOR CH1/10W 330	1	
R5690,91	ERJ6GEYJ562	M.RESISTOR CH1/10W 5.6K	2	
R5692-97	ERJ6GEYJ103	M.RESISTOR CH1/10W 10K	6	
R5698	ERJ6GEYJ102	M.RESISTOR CH1/10W 1K	1	
R5699	ERJ6GEYJ682	M.RESISTOR CH1/10W 6.8K	1	
R5700	ERJ6GEYJ123	M.RESISTOR CH1/10W 12K	1	
R5701-04	ERJ6GEYJ102	M.RESISTOR CH1/10W 1K	4	
R5705	ERJ6GEYJ471	M.RESISTOR CH1/10W 470	1	
R5706	ERJ6GEYJ100	M.RESISTOR CH1/10W 10	1	
R5707,08	ERJ6GEYJ101	M.RESISTOR CH1/10W 100	2	
R5709,10	ERJ6GEYJ560	M.RESISTOR CH1/10W 56	2	
R5711,12	ERJ6GEYF472	M.RESISTOR CH1/10W 4.7K	2	
R5713-18	ERJ6GEYJ100	M.RESISTOR CH1/10W 10	6	
R5721,22	ERJ6GEYJ100	M.RESISTOR CH1/10W 10	2	
R5723	ERJ6GEY0R00	C.RESISTOR 1/10W 0	1	
RY5002	VSY2069	RELAY	1	
SW5001-03	VJP1990	CONNECTOR (MALE)	3	
SW5400,01	VJP2536A003	CONNECTOR (MALE)	2	
SW5600,01	VJP2536A003	CONNECTOR (MALE)	2	
SW5001S	VJS1990	CONNECTOR (FEMALE)	1	
SW5002S	VJS1990	CONNECTOR (FEMALE)	1	
SW5003S	VJS1990	CONNECTOR (FEMALE)	1	
SW5400S	VJS1990	CONNECTOR (FEMALE)	1	
SW5401S	VJS1990	CONNECTOR (FEMALE)	1	
SW5600S	VJS1990	CONNECTOR (FEMALE)	1	
SW5601S	VJS1990	CONNECTOR (FEMALE)	1	
TP5001-05	VJR0646	TEST POINT	5	
TP5007-09	VJR0646	TEST POINT	3	
TP5300-04	VJR0646	TEST POINT	5	
TP5400-04	VJR0646	TEST POINT	5	
TP5501,02	VJR0646	TEST POINT	2	
TP5600-04	VJR0646	TEST POINT	5	
TPG5001-05	VJR0646	TEST POINT	5	
TPG5300	VJR0646	TEST POINT	1	
TPG5600	VJR0646	TEST POINT	1	
VC5001,02	ECV1ZW20X53T	C.CAPACITOR 20P	2	
VC5301	ECV1ZW20X53T	C.CAPACITOR 20P	1	
VL5001	EIV7EL066B	COIL	1	
VL5002	EIV7EL064B	COIL	1	
VL5003	EIV7EL067B	COIL	1	
VL5004	EIV7EL069B	COIL	1	
VL5005	EIV7EL070B	COIL	1	
VL5006	EIV7EL071B	COIL	1	
VL5300	VLQ0547	COIL	1	

S2 EQUALIZER CH1 VEP 85021B
S2 SUB VEP87002A

Ref.No.	Part No.	Part Name & Description	Pcs	Remarks
VR5001	VRV0064B501	V.RESISTOR 500	1	
VR5002	VRV0064B202	V.RESISTOR 2K	1	
VR5003	VRV0109B501	V.RESISTOR 500	1	
VR5004	VRV0109B201	V.RESISTOR 200	1	
VR5005,06	VRV0109B101	V.RESISTOR 100	2	
VR5008,09	VRV0109B101	V.RESISTOR 100	2	
VR5010	VRV0064B202	V.RESISTOR 2K	1	
VR5011,12	VRV0109B101	V.RESISTOR 100	2	
VR5300	VRV0109B102	V.RESISTOR 1K	1	
VR5301	VRV0109B101	V.RESISTOR 100	1	
VR5302	VRV0113B103	V.RESISTOR 10K	1	
VR5500	VRV0109B202	V.RESISTOR 2K	1	
VR5501	VRV0109B502	V.RESISTOR 5K	1	
VR5502	VRV0109B202	V.RESISTOR 2K	1	
VR5600	VRV0109B502	V.RESISTOR 5K	1	
VR5601	VRV0109B103	V.RESISTOR 10K	1	
VR5602	VRV0109B502	V.RESISTOR 5K	1	
VR5603	VRV0109B103	V.RESISTOR 10K	1	
VR5604	VRV0109B502	V.RESISTOR 5K	1	
VR5605	VRV0109B103	V.RESISTOR 10K	1	
VR5606	VRV0109B502	V.RESISTOR 5K	1	
VR5607	VRV0109B103	V.RESISTOR 10K	1	
VR5608-13	VRV0064B202	V.RESISTOR 2K	6	
VR5614,15	VRV0109B502	V.RESISTOR 5K	2	
		MISCELLANEOUS		
	VGQ0291	P.C.BOARD NAME PLATE	1	
	VJF0300	BINDER	1	
	VJF0817	CLAMPER	1	
	VML2143	CARD PULLER	1	
	VML2144	CARD PULLER	1	
	VSC3316	SHIELD CASE	1	
	VSC3317	SHIELD CASE	1	
	VXA4420	P.C.BOARD SHIELD PLATE	1	
	XNG26E	NUT	4	
	XTV3+6FFR	SCREW	5	
	XYN26+C12	SCREW	4	
	VMS2875	POST	3	
	VEP85021B	P.C.BOARD W/COMPONENT		
		S2 EQUALIZER CH1		
	VEP87002A	P.C.BOARD W/COMPONENT		FOR VEP85021B
		S2 SUB		
		CAPACITORS		
C347	ECUM1H220JCN	C.CAPACITOR CH 50V 22P	1	
C350,51	ECUM1E104ZFN	C.CAPACITOR 25V 0.1U	2	
C5001	ECUM1E104ZFN	C.CAPACITOR 25V 0.1U	1	
C5002	ECEA1CGE471	E.CAPACITOR 16V 470U	1	
C5003,04	ECUM1E104ZFN	C.CAPACITOR 25V 0.1U	2	
C5005	ECEA1CGE471	E.CAPACITOR 16V 470U	1	
C5006,07	ECUM1E104ZFN	C.CAPACITOR 25V 0.1U	2	
C5008	ECEA1CGE471	E.CAPACITOR 16V 470U	1	
C5009,10	ECUM1E104ZFN	C.CAPACITOR 25V 0.1U	2	
C5011	ECEA1CGE471	E.CAPACITOR 16V 470U	1	
C5012	ECUM1E104ZFN	C.CAPACITOR 25V 0.1U	1	
C5013,14	ECA1HXS2R2	E.CAPACITOR 50V 2.2U	2	
C5015	ECUM1E104ZFN	C.CAPACITOR 25V 0.1U	1	
C5016,17	ECUM1H561JCN	C.CAPACITOR CH 50V 560P	2	
C5018	ECUM1E104ZFN	C.CAPACITOR 25V 0.1U	1	
C5020	ECUM1E104ZFN	C.CAPACITOR 25V 0.1U	1	
C5021,22	ECA1HXS2R2	E.CAPACITOR 50V 2.2U	2	

Ref.No.	Part No.	Part Name & Description	Pcs	Remarks
C5023	ECUM1E104ZFN	C.CAPACITOR 25V 0.1U	1	
C5024,25	ECUM1H561JCN	C.CAPACITOR CH 50V 560P	2	
C5026	ECUM1E104ZFN	C.CAPACITOR 25V 0.1U	1	
C5028,29	ECUM1E104ZFN	C.CAPACITOR 25V 0.1U	2	
C5030,31	ECUM1H151JCN	C.CAPACITOR CH 50V 150P	2	
C5032-34	ECUM1E104ZFN	C.CAPACITOR 25V 0.1U	3	
C5035	ECUM1H220JCN	C.CAPACITOR CH 50V 22P	1	
C5036,37	ECUM1E104ZFN	C.CAPACITOR 25V 0.1U	2	
C5038	ECUM1H104KBM	C.CAPACITOR CH 50V 0.1U	1	
C5039-44	ECUM1E104ZFN	C.CAPACITOR 25V 0.1U	6	
C5045	ECUM1H104KBM	C.CAPACITOR CH 50V 0.1U	1	
C5046	VCM0058C021	M.CAPACITOR 20P	1	
C5047	VCM0059F067	M.CAPACITOR 60U	1	
C5048	VCM0059F088	M.CAPACITOR 800U	1	
C5049	VCM0059F230	M.CAPACITOR 23P	1	
C5050,51	ECUM1E104ZFN	C.CAPACITOR 25V 0.1U	2	
C5052	ECUM1H392KBN	C.CAPACITOR CH 50V 3900P	1	
C5053	ECUM1E104ZFN	C.CAPACITOR 25V 0.1U	1	
C5054	ECA1CXS470	E.CAPACITOR 16V 47U	1	
C5055	ECUM1E104ZFN	C.CAPACITOR 25V 0.1U	1	
C5056	ECA1CXS470	E.CAPACITOR 16V 47U	1	
C5057	ECUM1H104KBM	C.CAPACITOR CH 50V 0.1U	1	
C5058-60	ECUM1E104ZFN	C.CAPACITOR 25V 0.1U	3	
C5061,62	ECUM1H104KBM	C.CAPACITOR CH 50V 0.1U	2	
C5063	ECUM1H101JCN	C.CAPACITOR CH 50V 100P	1	
C5064,65	ECUM1E104ZFN	C.CAPACITOR 25V 0.1U	2	
C5066,67	ECUM1H104KBM	C.CAPACITOR CH 50V 0.1U	2	
C5068,69	ECUM1E104ZFN	C.CAPACITOR 25V 0.1U	2	
C5071	ECUM1H104KBM	C.CAPACITOR CH 50V 0.1U	1	
C5072,73	ECUM1E104ZFN	C.CAPACITOR 25V 0.1U	2	
C5074	ECUM1H104KBM	C.CAPACITOR CH 50V 0.1U	1	
C5075-82	ECUM1E104ZFN	C.CAPACITOR 25V 0.1U	8	
C5083	ECUM1H101JCN	C.CAPACITOR CH 50V 100P	1	
C5084	ECUM1E104ZFN	C.CAPACITOR 25V 0.1U	1	
C5085	ECUM1H101JCN	C.CAPACITOR CH 50V 100P	1	
C5086-89	ECUM1E104ZFN	C.CAPACITOR 25V 0.1U	4	
C5090,91	ECUM1H104KBM	C.CAPACITOR CH 50V 0.1U	2	
C5092,93	ECUM1E104ZFN	C.CAPACITOR 25V 0.1U	2	
C5095	ECUM1H104KBM	C.CAPACITOR CH 50V 0.1U	1	
C5096	ECUM1E104ZFN	C.CAPACITOR 25V 0.1U	1	
C5097	ECA1CXS470	E.CAPACITOR 16V 47U	1	
C5098	ECUM1E104ZFN	C.CAPACITOR 25V 0.1U	1	
C5099	ECA1CXS470	E.CAPACITOR 16V 47U	1	
C5100	VCM0058C031	M.CAPACITOR 30P	1	
C5101	VCM0059F056	M.CAPACITOR 5U	1	
C5102	VCM0059F130	M.CAPACITOR 13P	1	
C5103	VCM0060F340	M.CAPACITOR 34P	1	
C5104,05	ECUM1E104ZFN	C.CAPACITOR 25V 0.1U	2	
C5106,07	ECUM1H104KBM	C.CAPACITOR CH 50V 0.1U	2	
C5108-22	ECUM1E104ZFN	C.CAPACITOR 25V 0.1U	15	
C5123,24	ECA1HXS100	E.CAPACITOR 50V 10U	2	
C5125	ECUM1E104ZFN	C.CAPACITOR 25V 0.1U	1	
C5126	ECA1CXS470	E.CAPACITOR 16V 47U	1	
C5127	ECUM1E104ZFN	C.CAPACITOR 25V 0.1U	1	
C5128	ECA1CXS470	E.CAPACITOR 16V 47U	1	
C5129	ECA1HXS100	E.CAPACITOR 50V 10U	1	
C5130	ECUM1H104KBM	C.CAPACITOR CH 50V 0.1U	1	
C5132-34	ECUM1E104ZFN	C.CAPACITOR 25V 0.1U	3	
C5135,36	ECUM1H101JCN	C.CAPACITOR CH 50V 100P	2	
C5137-41	ECUM1E104ZFN	C.CAPACITOR 25V 0.1U	5	
C5143,44	ECUM1E104ZFN	C.CAPACITOR 25V 0.1U	2	
C5145	ECUM1H070DCN	C.CAPACITOR CH 50V 7P	1	
C5147	ECUM1H020CCN	C.CAPACITOR CH 50V 2P	1	
C5204	ECUM1H220JCN	C.CAPACITOR CH 50V 22P	1	
C5208	VCM0058F033	M.CAPACITOR 3000P	1	
C5209	ECUM1H391JCN	C.CAPACITOR CH 50V 390P	1	
C5210	ECUM1E104ZFN	C.CAPACITOR 25V 0.1U	1	
C5300-06	ECUM1E104ZFN	C.CAPACITOR 25V 0.1U	7	
C5307	ECUM1C104KBN	C.CAPACITOR CH 16V 0.1U	1	
C5308	ECA1CXS470	E.CAPACITOR 16V 47U	1	
C5309	ECUM1E104ZFN	C.CAPACITOR 25V 0.1U	1	
C5316,17	ECUM1E104ZFN	C.CAPACITOR 25V 0.1U	2	
C5318	ECA1CXS470	E.CAPACITOR 16V 47U	1	
C5319	ECUM1E104ZFN	C.CAPACITOR 25V 0.1U	1	
C5320	ECEA1CGE471	E.CAPACITOR 16V 470U	1	

Ref.No.	Part No.	Part Name & Description	Pcs	Remarks
C5321-32	ECUM1E104ZFN	C.CAPACITOR 25V 0.1U	12	
C5333	ECA1CXS470	E.CAPACITOR 16V 47U	1	
C5334-41	ECUM1E104ZFN	C.CAPACITOR 25V 0.1U	8	
C5342	ECUM1H020CCN	C.CAPACITOR CH 50V 2P	1	
C5343	ECUM1H102JN	C.CAPACITOR CH 50V 1000P	1	
C5344	ECA1HXS100	E.CAPACITOR 50V 10U	1	
C5345	ECUM1E104ZFN	C.CAPACITOR 25V 0.1U	1	
C5346	ECUM1H820JCN	C.CAPACITOR CH 50V 82P	1	
C5347	ECUM1H560JCN	C.CAPACITOR CH 50V 56P	1	
C5400	ECUM1E104ZFN	C.CAPACITOR 25V 0.1U	1	
C5405	ECUM1E104ZFN	C.CAPACITOR 25V 0.1U	1	
C5500-02	ECUM1E104ZFN	C.CAPACITOR 25V 0.1U	3	
C5503,04	ECUM1H151JCN	C.CAPACITOR CH 50V 150P	2	
C5505-18	ECUM1E104ZFN	C.CAPACITOR 25V 0.1U	14	
C5519	ECUM1H102JN	C.CAPACITOR CH 50V 1000P	1	
C5520-26	ECUM1E104ZFN	C.CAPACITOR 25V 0.1U	7	
C5528	ECUM1H104ZFN	C.CAPACITOR CH 50V 0.1U	1	
C5600-06	ECUM1E104ZFN	C.CAPACITOR 25V 0.1U	7	
C5607	ECUM1H331JCN	C.CAPACITOR CH 50V 330P	1	
C5608,09	ECUM1E104ZFN	C.CAPACITOR 25V 0.1U	2	
C5610	ECA1HXS100	E.CAPACITOR 50V 10U	1	
C5611	ECUM1H560JCN	C.CAPACITOR CH 50V 56P	1	
C5612-18	ECUM1E104ZFN	C.CAPACITOR 25V 0.1U	7	
C5619	ECUM1E153KBN	C.CAPACITOR CH 25V 0.015U	1	
C5620-22	ECUM1E104ZFN	C.CAPACITOR 25V 0.1U	3	
C5623	ECA1CXS470	E.CAPACITOR 16V 47U	1	
C5624	ECUM1E104ZFN	C.CAPACITOR 25V 0.1U	1	
C5625	ECA1CXS470	E.CAPACITOR 16V 47U	1	
C5626-30	ECUM1E104ZFN	C.CAPACITOR 25V 0.1U	5	
C5631	ECUM1H331JCN	C.CAPACITOR CH 50V 330P	1	
C5632,33	ECUM1E104ZFN	C.CAPACITOR 25V 0.1U	2	
C5634	ECA1HXS100	E.CAPACITOR 50V 10U	1	
C5635	ECUM1H561JCN	C.CAPACITOR CH 50V 560P	1	
C5636-42	ECUM1E104ZFN	C.CAPACITOR 25V 0.1U	7	
C5643	ECUM1E153KBN	C.CAPACITOR CH 25V 0.015U	1	
C5644-58	ECUM1E104ZFN	C.CAPACITOR 25V 0.1U	15	
CN5001	VJP1230R	CONNECTOR (MALE)	1	
CN5002	VJP1230G	CONNECTOR (MALE)	1	
D5301	FC54M-5	DIODE	1	
D5302	MA157	DIODE	1	
D5401	MA151K	DIODE	1	
D5600	MA151K	DIODE	1	
D5601	MA3030	DIODE	1	
D5602-05	MA151K	DIODE	4	
D5606	MA3030	DIODE	1	
D5607-09	MA151K	DIODE	3	
DL5001	VLD0220	DELAY	1	
DL5002,03	VLD0219	DELAY	2	
FL5001-04	VLF0931	FILTER	4	
IC5001,02	UPC1663G	IC	2	
IC5003	MC1495L	IC	1	
IC5004	UPC1663G	IC	1	
IC5005-07	MC1495L	IC	3	
IC5008,09	UPC1663G	IC	2	
IC5010	AD96685BQ	IC	1	
IC5011	UPC1663G	IC	1	
IC5300,01	MC10H116L	IC	2	
IC5302	MC10H107L	IC	1	
IC5303	MB813AZ	IC	1	
IC5304	MC10H116L	IC	1	

Ref.No.	Part No.	Part Name & Description	Pcs	Remarks
IC5306	UPC78L08J	IC	1	
IC5307	UPC79L08J	IC	1	
IC5308	TL082CPS	IC	1	
IC5309	LM337T	IC	1	
IC5400	MC74HC04AF	IC	1	
IC5402	MC14053BF	IC	1	
IC5500	UPC1663G	IC	1	
IC5501	NJM1496M	IC	1	
IC5502	TL082CPS	IC	1	
IC5503	NJM360M	IC	1	
IC5600	TL082CPS	IC	1	
IC5601	NJM1496M	IC	1	
IC5602	TL084CNS	IC	1	
IC5603	NJM1496M	IC	1	
IC5604	TL084CNS	IC	1	
IC5605	MC14053BF	IC	1	
L301	VLQ0188MR56N	COIL 0.56UH	1	
L5001,02	VLQEL06F100J	COIL 10UH	2	
L5003	VLQ0171K4R7N	COIL 4.7UH	1	
L5004,05	VLQEL06F100J	COIL 10UH	2	
L5006,07	VLQ0171K4R7N	COIL 4.7UH	2	
L5008	VLQ0171M2R2N	COIL 2.2UH	1	
L5009,10	VLQEL06F100J	COIL 10UH	2	
L5011	VLQ0171K4R7N	COIL 4.7UH	1	
L5012-14	VLQ0171M1R8N	COIL 1.8UH	3	
L5300	VLQEL06F100J	COIL 10UH	1	
L5500,01	VLQ0188KR39N	COIL 0.39UH	2	
L5600,01	VLQEL06F100J	COIL 10UH	2	
P201,02	VJP3151	CONNECTOR (MALE)	2	
Q309,10	2SK198-P	TRANSISTOR	2	
Q5001-04	XN6537	TRANSISTOR	4	
Q5005	XN5531	TRANSISTOR	1	
Q5006,07	2SA1738	TRANSISTOR	2	
Q5008	XN5531	TRANSISTOR	1	
Q5009-11	2SC3130	TRANSISTOR	3	
Q5012-16	2SC2480-S	TRANSISTOR	5	
Q5017-19	2SA1022-C	TRANSISTOR	3	
Q5020,21	2SC3130	TRANSISTOR	2	
Q5022,23	2SD1938-T	TRANSISTOR	2	
Q5300	XN5531	TRANSISTOR	1	
Q5301	2SC2295-C	TRANSISTOR	1	
Q5302,03	XN6543	TRANSISTOR	2	
Q5304	2SC2295-C	TRANSISTOR	1	
Q5305	2SA1022-C	TRANSISTOR	1	
Q5306	2SC2295-C	TRANSISTOR	1	
Q5307	2SA1022-C	TRANSISTOR	1	
Q5308	2SC2295-C	TRANSISTOR	1	
Q5402	2SD601A-R	TRANSISTOR	1	
Q5403,04	2SD1938-T	TRANSISTOR	2	
Q5500-02	2SC3130	TRANSISTOR	3	
Q5503	2SC2295-C	TRANSISTOR	1	
Q5504	2SA1022-C	TRANSISTOR	1	
Q5600	XN5531	TRANSISTOR	1	
Q5601,02	2SC3130	TRANSISTOR	2	
Q5603	XN6435	TRANSISTOR	1	
Q5604	2SC3130	TRANSISTOR	1	
Q5605	XN5531	TRANSISTOR	1	
Q5606-08	2SC3130	TRANSISTOR	3	
Q5609	XN6435	TRANSISTOR	1	
Q5610,11	2SA1022-C	TRANSISTOR	2	
		RESISTORS		
R375	ERJ6GEYJ820	M.RESISTOR CH1/10W 82	1	
R5001,02	VRE0034E510	M.RESISTOR CH 1/10W 51	2	

Ref.No.	Part No.	Part Name & Description	Pcs	Remarks
R5199	ERJ6GEYF472	M.RESISTOR CH1/10W 4.7K	1	
R5200	VRE0034E750	M.RESISTOR CH 1/10W 75	1	
R5201	ERJ6GEYJ101	M.RESISTOR CH1/10W 100	1	
R5202	ERJ6GEYJ102	M.RESISTOR CH1/10W 1K	1	
R5203	ERJ6GEYJ101	M.RESISTOR CH1/10W 100	1	
R5204	ERJ6GEYJ102	M.RESISTOR CH1/10W 1K	1	
R5205,06	ERJ6GEYG680	M.RESISTOR CH1/10W 68	2	
R5207	ERJ6GEYJ470	M.RESISTOR CH1/10W 47	1	
R5208	ERJ6GEYJ221	M.RESISTOR CH1/10W 220	1	
R5209,10	ERJ6GEYG151	M.RESISTOR CH1/10W 150	2	
R5211	ERJ6GEYJ102	M.RESISTOR CH1/10W 1K	1	
R5212	ERJ6GEYJ101	M.RESISTOR CH1/10W 100	1	
R5213	ERJ6GEYJ682	M.RESISTOR CH1/10W 6.8K	1	
R5214,15	ERJ6GEYJ390	M.RESISTOR CH1/10W 39	2	
R5216-22	ERJ6GEY0R00	C.RESISTOR 1/10W 0	7	
R5223	ERJ6GEYJ470	M.RESISTOR CH1/10W 47	1	
R5224,25	ERJ6GEY0R00	C.RESISTOR 1/10W 0	2	
R5226	ERJ6GEYJ150	M.RESISTOR CH1/10W 15	1	
R5227	ERJ6GEYJ470	M.RESISTOR CH1/10W 47	1	
R5300-02	ERJ6GEYJ101	M.RESISTOR CH1/10W 100	3	
R5303,04	ERJ6GEYJ391	M.RESISTOR CH1/10W 390	2	
R5305-09	ERJ6GEYJ101	M.RESISTOR CH1/10W 100	5	
R5310,11	ERJ6GEYJ330	M.RESISTOR CH1/10W 33	2	
R5312,13	ERJ6GEYJ561	M.RESISTOR CH1/10W 560	2	
R5314,15	ERJ6GEYJ330	M.RESISTOR CH1/10W 33	2	
R5318,19	VRE0034E101	M.RESISTOR CH 1/10W 100	2	
R5320,21	ERJ6GEYF472	M.RESISTOR CH1/10W 4.7K	2	
R5322	ERJ6GEYJ102	M.RESISTOR CH1/10W 1K	1	
R5323	VRE0034E510	M.RESISTOR CH 1/10W 51	1	
R5324	VRE0034E101	M.RESISTOR CH 1/10W 100	1	
R5325	VRE0034E510	M.RESISTOR CH 1/10W 51	1	
R5326	VRE0034E101	M.RESISTOR CH 1/10W 100	1	
R5327	ERJ6GEYJ271	M.RESISTOR CH1/10W 270	1	
R5329	ERJ6GEYJ271	M.RESISTOR CH1/10W 270	1	
R5331,32	ERJ6GEYJ101	M.RESISTOR CH1/10W 100	2	
R5335-42	ERJ6GEYJ101	M.RESISTOR CH1/10W 100	8	
R5343,44	ERJ6GEYJ331	M.RESISTOR CH1/10W 330	2	
R5345,46	VRE0034E510	M.RESISTOR CH 1/10W 51	2	
R5347,48	ERJ6GEYJ331	M.RESISTOR CH1/10W 330	2	
R5349,50	VRE0034E510	M.RESISTOR CH 1/10W 51	2	
R5351	ERJ6GEYJ101	M.RESISTOR CH1/10W 100	1	
R5352	ERJ6GEYJ562	M.RESISTOR CH1/10W 5.6K	1	
R5353	VRE0034E512	M.RESISTOR CH 1/10W 5.1K	1	
R5354	ERJ6GEYJ821	M.RESISTOR CH1/10W 820	1	
R5355	ERJ6GEYJ562	M.RESISTOR CH1/10W 5.6K	1	
R5356,57	ERJ6GEYJ103	M.RESISTOR CH1/10W 10K	2	
R5358	ERJ6GEYJ101	M.RESISTOR CH1/10W 100	1	
R5359	ERJ6GEYJ223	M.RESISTOR CH1/10W 22K	1	
R5360	ERG2SJ220	M.RESISTOR 2W 22	1	
R5361	ERJ6GEYJ121	M.RESISTOR CH1/10W 120	1	
R5362	ERJ6GEYJ820	M.RESISTOR CH1/10W 82	1	
R5363	ERJ6GEYJ221	M.RESISTOR CH1/10W 220	1	
R5364,65	VRE0034E750	M.RESISTOR CH 1/10W 75	2	
R5366	ERJ6GEYJ102	M.RESISTOR CH1/10W 1K	1	
R5368	ERJ6GEYJ101	M.RESISTOR CH1/10W 100	1	
R5369	ERJ6GEY0R00	C.RESISTOR 1/10W 0	1	
R5372,73	ERJ6GEYJ101	M.RESISTOR CH1/10W 100	2	
R5374	ERJ6GEYJ330	M.RESISTOR CH1/10W 33	1	
R5400	ERJ6GEYF472	M.RESISTOR CH1/10W 4.7K	1	
R5401-03	ERJ6GEYJ103	M.RESISTOR CH1/10W 10K	3	
R5411	ERJ6GEYJ101	M.RESISTOR CH1/10W 100	1	
R5412,13	ERJ6GEYF472	M.RESISTOR CH1/10W 4.7K	2	
R5414,15	ERJ6GEYJ103	M.RESISTOR CH1/10W 10K	2	
R5416	ERJ6GEYJ183	M.RESISTOR CH1/10W 18K	1	
R5500	ERJ6GEYJ101	M.RESISTOR CH1/10W 100	1	
R5501	ERJ6GEYJ560	M.RESISTOR CH1/10W 56	1	
R5502	ERJ6GEYJ561	M.RESISTOR CH1/10W 560	1	
R5503,04	VRE0034E750	M.RESISTOR CH 1/10W 75	2	
R5505,06	ERJ6GEYJ470	M.RESISTOR CH1/10W 47	2	
R5508,09	ERJ6GEYJ331	M.RESISTOR CH1/10W 330	2	
R5510,11	ERJ6GEYJ102	M.RESISTOR CH1/10W 1K	2	
R5512-14	ERJ6GEYJ560	M.RESISTOR CH1/10W 56	3	
R5515,16	ERJ6GEYJ562	M.RESISTOR CH1/10W 5.6K	2	
R5517-21	ERJ6GEYJ102	M.RESISTOR CH1/10W 1K	5	
R5522	ERJ6GEYJ821	M.RESISTOR CH1/10W 820	1	

Ref.No.	Part No.	Part Name & Description	Pcs	Remarks
R5523-26	ERJ6GEYJ560	M.RESISTOR CH1/10W 56	4	
R5527	ERJ6GEYJ822	M.RESISTOR CH1/10W 8.2K	1	
R5528	ERJ6GEYJ392	M.RESISTOR CH1/10W 3.9K	1	
R5530	ERJ6GEYJ392	M.RESISTOR CH1/10W 3.9K	1	
R5531	ERJ6GEYJ562	M.RESISTOR CH1/10W 5.6K	1	
R5532,33	ERJ6GEYJ102	M.RESISTOR CH1/10W 1K	2	
R5534-37	ERJ6GEYJ103	M.RESISTOR CH1/10W 10K	4	
R5538	ERJ6GEYJ101	M.RESISTOR CH1/10W 100	1	
R5539	ERJ6GEYJ821	M.RESISTOR CH1/10W 820	1	
R5540	ERJ6GEYJ123	M.RESISTOR CH1/10W 12K	1	
R5541	VRE0034E750	M.RESISTOR CH 1/10W 75	1	
R5542	ERJ6GEYJ122	M.RESISTOR CH1/10W 1.2K	1	
R5543	ERJ6GEY0R00	C.RESISTOR 1/10W 0	1	
R5544	ERJ6GEYJ101	M.RESISTOR CH1/10W 100	1	
R5545	ERJ6GEYJ392	M.RESISTOR CH1/10W 3.9K	1	
R5547	ERJ6GEYJ222	M.RESISTOR CH1/10W 2.2K	1	
R5548	ERJ6GEYJ101	M.RESISTOR CH1/10W 100	1	
R5600,01	ERJ6GEYJ103	M.RESISTOR CH1/10W 10K	2	
R5602-04	ERJ6GEYJ562	M.RESISTOR CH1/10W 5.6K	3	
R5605	ERJ6GEYJ101	M.RESISTOR CH1/10W 100	1	
R5606,07	ERJ6GEYJ561	M.RESISTOR CH1/10W 560	2	
R5608,09	ERJ6GEYJ560	M.RESISTOR CH1/10W 56	2	
R5610	ERDS2TJ102	C.RESISTOR 1/4W 1K	1	
R5611	ERDS2TJ101	C.RESISTOR 1/4W 100	1	
R5612	ERJ6GEYJ101	M.RESISTOR CH1/10W 100	1	
R5613	ERDS2TJ222	C.RESISTOR 1/4W 2.2K	1	
R5614-17	ERJ6GEYJ101	M.RESISTOR CH1/10W 100	4	
R5618	ERDS2TJ152	C.RESISTOR 1/4W 1.5K	1	
R5619	ERJ6GEYG151	M.RESISTOR CH1/10W 150	1	
R5620,21	ERJ6GEYJ470	M.RESISTOR CH1/10W 47	2	
R5622,23	ERJ6GEYJ102	M.RESISTOR CH1/10W 1K	2	
R5624	ERJ6GEYG151	M.RESISTOR CH1/10W 150	1	
R5625,26	ERJ6GEYJ102	M.RESISTOR CH1/10W 1K	2	
R5627	ERJ6GEYJ471	M.RESISTOR CH1/10W 470	1	
R5628	ERJ6GEYJ223	M.RESISTOR CH1/10W 22K	1	
R5629	ERJ6GEYJ331	M.RESISTOR CH1/10W 330	1	
R5630,31	ERJ6GEYJ471	M.RESISTOR CH1/10W 470	2	
R5632,33	ERJ6GEYJ562	M.RESISTOR CH1/10W 5.6K	2	
R5634-37	ERJ6GEYJ103	M.RESISTOR CH1/10W 10K	4	
R5638	ERJ6GEYJ102	M.RESISTOR CH1/10W 1K	1	
R5639	ERJ6GEYJ682	M.RESISTOR CH1/10W 6.8K	1	
R5640	ERJ6GEYJ123	M.RESISTOR CH1/10W 12K	1	
R5641,42	ERJ6GEYJ102	M.RESISTOR CH1/10W 1K	2	
R5643,44	ERJ6GEYJ330	M.RESISTOR CH1/10W 33	2	
R5645	ERJ6GEYJ390	M.RESISTOR CH1/10W 39	1	
R5646-49	ERJ6GEYJ101	M.RESISTOR CH1/10W 100	4	
R5650,51	ERJ6GEYJ103	M.RESISTOR CH1/10W 10K	2	
R5652-54	ERJ6GEYJ562	M.RESISTOR CH1/10W 5.6K	3	
R5655	ERJ6GEYJ101	M.RESISTOR CH1/10W 100	1	
R5656,57	ERJ6GEYJ561	M.RESISTOR CH1/10W 560	2	
R5658,59	ERJ6GEYJ560	M.RESISTOR CH1/10W 56	2	
R5670	ERDS2TJ102	C.RESISTOR 1/4W 1K	1	
R5671	ERDS2TJ101	C.RESISTOR 1/4W 100	1	
R5672	ERJ6GEYJ101	M.RESISTOR CH1/10W 100	1	
R5673	ERDS2TJ222	C.RESISTOR 1/4W 2.2K	1	
R5674,75	ERJ6GEYJ101	M.RESISTOR CH1/10W 100	2	
R5677,78	ERJ6GEYJ101	M.RESISTOR CH1/10W 100	2	
R5679	ERDS2TJ152	C.RESISTOR 1/4W 1.5K	1	
R5680	ERJ6GEYJ101	M.RESISTOR CH1/10W 100	1	
R5681,82	ERJ6GEYJ102	M.RESISTOR CH1/10W 1K	2	
R5683,84	ERJ6GEYJ470	M.RESISTOR CH1/10W 47	2	
R5685	ERJ6GEYJ471	M.RESISTOR CH1/10W 470	1	
R5686	ERJ6GEYJ223	M.RESISTOR CH1/10W 22K	1	
R5687,88	ERJ6GEYJ471	M.RESISTOR CH1/10W 470	2	
R5689	ERJ6GEYJ331	M.RESISTOR CH1/10W 330	1	
R5690,91	ERJ6GEYJ562	M.RESISTOR CH1/10W 5.6K	2	
R5692-97	ERJ6GEYJ103	M.RESISTOR CH1/10W 10K	6	
R5698	ERJ6GEYJ102	M.RESISTOR CH1/10W 1K	1	
R5699	ERJ6GEYJ682	M.RESISTOR CH1/10W 6.8K	1	
R5700	ERJ6GEYJ123	M.RESISTOR CH1/10W 12K	1	
R5701-04	ERJ6GEYJ102	M.RESISTOR CH1/10W 1K	4	
R5705	ERJ6GEYJ471	M.RESISTOR CH1/10W 470	1	
R5706	ERJ6GEYJ100	M.RESISTOR CH1/10W 10	1	
R5707,08	ERJ6GEYJ101	M.RESISTOR CH1/10W 100	2	
R5709,10	ERJ6GEYJ560	M.RESISTOR CH1/10W 56	2	

S3

S3 CUE AUDIO VEP84107A

Ref.No.	Part No.	Part Name & Description	Pcs	Remarks
R5711,12	ERJ6GEYF472	M.RESISTOR CH1/10W 4.7K	2	
R5713-18	ERJ6GEYJ100	M.RESISTOR CH1/10W 10	6	
R5721,22	ERJ6GEYJ100	M.RESISTOR CH1/10W 10	2	
R5723	ERJ6GEY0R00	C.RESISTOR 1/10W 0	1	
RY5002	VSY2069	RELAY	1	
SW5001-03	VJP1990	CONNECTOR (MALE)	3	
SW5400,01	VJP2536A003	CONNECTOR (MALE)	2	
SW5600,01	VJP2536A003	CONNECTOR (MALE)	2	
SW5001S	VJS1990	CONNECTOR (FEMALE)	1	
SW5002S	VJS1990	CONNECTOR (FEMALE)	1	
SW5003S	VJS1990	CONNECTOR (FEMALE)	1	
SW5400S	VJS1990	CONNECTOR (FEMALE)	1	
SW5401S	VJS1990	CONNECTOR (FEMALE)	1	
SW5600S	VJS1990	CONNECTOR (FEMALE)	1	
SW5601S	VJS1990	CONNECTOR (FEMALE)	1	
TP5001-05	VJR0646	TEST POINT	5	
TP5007-09	VJR0646	TEST POINT	3	
TP5300-04	VJR0646	TEST POINT	5	
TP5400-04	VJR0646	TEST POINT	5	
TP5501,02	VJR0646	TEST POINT	2	
TP5600-04	VJR0646	TEST POINT	5	
TPG5001-05	VJR0646	TEST POINT	5	
TPG5300	VJR0646	TEST POINT	1	
TPG5600	VJR0646	TEST POINT	1	
VC5001,02	ECV1ZW20X53T	C.CAPACITOR 20P	2	
VC5301	ECV1ZW20X53T	C.CAPACITOR 20P	1	
VL5001	EIV7EL066B	COIL	1	
VL5002	EIV7EL064B	COIL	1	
VL5003	EIV7EL067B	COIL	1	
VL5004	EIV7EL069B	COIL	1	
VL5005	EIV7EL070B	COIL	1	
VL5006	EIV7EL071B	COIL	1	
VL5300	VLQ0547	COIL	1	
VR5001	VRV0064B501	V.RESISTOR 500	1	
VR5002	VRV0064B202	V.RESISTOR 2K	1	
VR5003	VRV0109B501	V.RESISTOR 500	1	
VR5004	VRV0109B201	V.RESISTOR 200	1	
VR5005,06	VRV0109B101	V.RESISTOR 100	2	
VR5008,09	VRV0109B101	V.RESISTOR 100	2	
VR5010	VRV0064B202	V.RESISTOR 2K	1	
VR5011,12	VRV0109B101	V.RESISTOR 100	2	
VR5300	VRV0109B102	V.RESISTOR 1K	1	
VR5301	VRV0109B101	V.RESISTOR 100	1	
VR5302	VRV0113B103	V.RESISTOR 10K	1	
VR5500	VRV0109B202	V.RESISTOR 2K	1	
VR5501	VRV0109B502	V.RESISTOR 5K	1	
VR5502	VRV0109B202	V.RESISTOR 2K	1	
VR5600	VRV0109B502	V.RESISTOR 5K	1	
VR5601	VRV0109B103	V.RESISTOR 10K	1	
VR5602	VRV0109B502	V.RESISTOR 5K	1	
VR5603	VRV0109B103	V.RESISTOR 10K	1	
VR5604	VRV0109B502	V.RESISTOR 5K	1	
VR5605	VRV0109B103	V.RESISTOR 10K	1	
VR5606	VRV0109B502	V.RESISTOR 5K	1	
VR5607	VRV0109B103	V.RESISTOR 10K	1	
VR5608-13	VRV0064B202	V.RESISTOR 2K	6	
VR5614,15	VRV0109B502	V.RESISTOR 5K	2	

Ref.No.	Part No.	Part Name & Description	Pcs	Remarks
		MISCELLANEOUS		
	VGQ0291	P.C.BOARD NAME PLATE	1	
	VJF0300	BINDER	1	
	VJF0817	CLAMPER	1	
	VML2143	CARD PULLER	1	
	VML2144	CARD PULLER	1	
	VSC3316	SHIELD CASE	1	
	VSC3317	SHIELD CASE	1	
	VXA4420	P.C.BOARD SHIELD PLATE	1	
	XNG26E	NUT	4	
	XTV3+6FFR	SCREW	5	
	XYN26+C12	SCREW	4	
	VMS2875	POST	3	
	VEP84107A	P.C.BOARD W/COMPONENT S3 CUE AUDIO		
		CAPACITORS		
C4001	ECA1VXLV470	E.CAPACITOR 35V 47U	1	
C4002	ECUM1E104ZFN	C.CAPACITOR 25V 0.1U	1	
C4003	ECA1HXLV101X	E.CAPACITOR 50V 100U	1	
C4004,05	ECUM1H103KBN	C.CAPACITOR CH 50V 0.01U	2	
C4006	ECQB1H103JF	P.CAPACITOR 50V 0.01U	1	
C4007	ECQB1H682JF	P.CAPACITOR 50V 6800P	1	
C4008	ECA1HXLV101X	E.CAPACITOR 50V 100U	1	
C4009	ECUM1H103KBN	C.CAPACITOR CH 50V 0.01U	1	
C4010	ECA1EXLV101X	E.CAPACITOR 25V 100U	1	
C4011,12	ECA1VXLV220	E.CAPACITOR 35V 22U	2	
C4013,14	ECUM1H222KBN	C.CAPACITOR CH 50V 2200P	2	
C4015	ECA1HXLV330	E.CAPACITOR 50V 33U	1	
C4016	VCF0042	P.CAPACITOR	1	
C4017	ECA1HXLV010	E.CAPACITOR 50V 1U	1	
C4018	ECA1HXNV010	E.CAPACITOR 50V 1U	1	
C4019,20	ECUM1H222KBN	C.CAPACITOR CH 50V 2200P	2	
C4021	ECA1HXLV330	E.CAPACITOR 50V 33U	1	
C4022	VCF0042	P.CAPACITOR	1	
C4023	ECUM1H104KBM	C.CAPACITOR CH 50V 0.1U	1	
C4024	ECA1HXLV010	E.CAPACITOR 50V 1U	1	
C4025	ECA1HXNV010	E.CAPACITOR 50V 1U	1	
C4026,27	ECUM1H222KBN	C.CAPACITOR CH 50V 2200P	2	
C4028	ECA1HXLV330	E.CAPACITOR 50V 33U	1	
C4029	VCF0042	P.CAPACITOR	1	
C4030	ECUM1H104KBM	C.CAPACITOR CH 50V 0.1U	1	
C4031	ECA1HXLV010	E.CAPACITOR 50V 1U	1	
C4032	ECA1HXNV010	E.CAPACITOR 50V 1U	1	
C4033,34	ECUM1H222KBN	C.CAPACITOR CH 50V 2200P	2	
C4035	ECA1HXLV330	E.CAPACITOR 50V 33U	1	
C4036	VCF0042	P.CAPACITOR	1	
C4037	ECUM1H104KBM	C.CAPACITOR CH 50V 0.1U	1	
C4038	ECA1HXLV010	E.CAPACITOR 50V 1U	1	
C4039	ECA1HXNV010	E.CAPACITOR 50V 1U	1	
C4040,41	ECUM1H102JCN	C.CAPACITOR CH 50V 1000P	2	
C4042	ECA1HXLV330	E.CAPACITOR 50V 33U	1	
C4043	ECCF2H121JC	C.CAPACITOR 500V 120P	1	
C4044	ECUM1H221JCN	C.CAPACITOR CH 50V 220P	1	
C4045	ECA1HXLV010	E.CAPACITOR 50V 1U	1	
C4046	ECA1HXNV010	E.CAPACITOR 50V 1U	1	
C4047,48	ECUM1H102JCN	C.CAPACITOR CH 50V 1000P	2	
C4049	ECA1HXLV330	E.CAPACITOR 50V 33U	1	
C4050	VCF0043	P.CAPACITOR	1	
C4051	ECUM1H221JCN	C.CAPACITOR CH 50V 220P	1	
C4052	ECQB1H334JF	P.CAPACITOR 50V 0.33U	1	

Ref.No.	Part No.	Part Name & Description	Pcs	Remarks
C4053	ECUM1H104KBM	C.CAPACITOR CH 50V 0.1U	1	
C4054	ECQB1H334JF	P.CAPACITOR 50V 0.33U	1	
C4055	ECUM1H104KBM	C.CAPACITOR CH 50V 0.1U	1	
C4056	ECA1HXLV100	E.CAPACITOR 50V 10U	1	
C4057	ECA1HXLV3R3	E.CAPACITOR 50V 3.3U	1	
C4058,59	ECA1CXLV101	E.CAPACITOR 16V 100U	2	
C4060	ECUM1E104ZFN	C.CAPACITOR 25V 0.1U	1	
C4061,62	ECA1CXLV101	E.CAPACITOR 16V 100U	2	
C4063	ECUM1E104ZFN	C.CAPACITOR 25V 0.1U	1	
C4064-66	ECA1VXNV4R7	E.CAPACITOR 35V 4.7U	3	
C4067	ECA1HXLV100	E.CAPACITOR 50V 10U	1	
C4068	ECUM1H560JCN	C.CAPACITOR CH 50V 56P	1	
C4069	ECUM1H102JCN	C.CAPACITOR CH 50V 1000P	1	
C4070	ECA1HXLV330	E.CAPACITOR 50V 33U	1	
C4071	ECA1CXLV221	E.CAPACITOR 16V 220U	1	
C4072	ECUM1H103KBN	C.CAPACITOR CH 50V 0.01U	1	
C4073	ECA1CXLV101	E.CAPACITOR 16V 100U	1	
C4074	ECA1HXNV010	E.CAPACITOR 50V 1U	1	
C4075	ECA1HXLV100	E.CAPACITOR 50V 10U	1	
C4076	ECUM1H222KBN	C.CAPACITOR CH 50V 2200P	1	
C4078,79	ECA1CXLV470	E.CAPACITOR 16V 47U	2	
C4080	ECA1EXNV220	E.CAPACITOR 25V 22U	1	
C4081,82	ECA1CXLV470	E.CAPACITOR 16V 47U	2	
C4083	ECA1VXNV4R7	E.CAPACITOR 35V 4.7U	1	
C4084,85	ECA1CXLV470	E.CAPACITOR 16V 47U	2	
C4086	ECA1EXNV220	E.CAPACITOR 25V 22U	1	
C4087,88	ECA1HXLV010	E.CAPACITOR 50V 1U	2	
C4089	ECA1HXLV100	E.CAPACITOR 50V 10U	1	
C4090	ECA1HXLV3R3	E.CAPACITOR 50V 3.3U	1	
C4091-00	ECA1CXLV101	E.CAPACITOR 16V 100U	10	
C4101-07	ECA1CXNV100	E.CAPACITOR 16V 10U	7	
C4108	ECUM1H104KBM	C.CAPACITOR CH 50V 0.1U	1	
C4109-11	ECA1CXNV100	E.CAPACITOR 16V 10U	3	
C4112	ECUM1H153KBN	C.CAPACITOR CH 50V 0.015U	1	
C4113	ECUM1H103KBN	C.CAPACITOR CH 50V 0.01U	1	
C4114	ECUM1H472KBN	C.CAPACITOR CH 50V 4700P	1	
C4115	ECA1CXNV220	E.CAPACITOR 16V 22U	1	
C4116	ECUM1H102JCN	C.CAPACITOR CH 50V 1000P	1	
C4117	ECA1CXLV470	E.CAPACITOR 16V 47U	1	
C4118	ECUM1H271JCN	C.CAPACITOR CH 50V 270P	1	
C4119	ECUM1H820JCN	C.CAPACITOR CH 50V 82P	1	
C4120,21	ECA1CXLV101	E.CAPACITOR 16V 100U	2	
C4122	ECA1CXLV221	E.CAPACITOR 16V 220U	1	
C4123	ECUM1H470JCN	C.CAPACITOR CH 50V 47P	1	
C4124	ECQB1H473JF	P.CAPACITOR 50V 0.047U	1	
C4125	ECA1CXNV100	E.CAPACITOR 16V 10U	1	
C4126	ECUM1H562KBN	C.CAPACITOR CH 50V 5600P	1	
C4127	ECA1CXNV100	E.CAPACITOR 16V 10U	1	
C4128	ECUM1H104KBM	C.CAPACITOR CH 50V 0.1U	1	
C4129	ECA1CXNV100	E.CAPACITOR 16V 10U	1	
C4130	ECA1CXNV220	E.CAPACITOR 16V 22U	1	
C4131	ECUM1H153KBN	C.CAPACITOR CH 50V 0.015U	1	
C4132	ECA1HXLV100	E.CAPACITOR 50V 10U	1	
C4134,35	ECA1HXLV100	E.CAPACITOR 50V 10U	2	
C4136	ECA1VXLV220	E.CAPACITOR 35V 22U	1	
C4137,38	ECA1CXLV101	E.CAPACITOR 16V 100U	2	
C4139,40	ECA1HXLV100	E.CAPACITOR 50V 10U	2	
C4141	ECA1VXLV220	E.CAPACITOR 35V 22U	1	
C4142,43	ECA1HXLV100	E.CAPACITOR 50V 10U	2	
C4144	ECA1VXLV220	E.CAPACITOR 35V 22U	1	
C4145,46	ECA1HXLV100	E.CAPACITOR 50V 10U	2	
C4147	ECA1VXLV220	E.CAPACITOR 35V 22U	1	
C4148	ECA1CXLV470	E.CAPACITOR 16V 47U	1	
C4151-56	ECUM1H220JCN	C.CAPACITOR CH 50V 22P	6	
C4201,02	ECUM1H152JN	C.CAPACITOR CH 50V 1500P	2	
C4203	ECUM1H682KBM	C.CAPACITOR 50V 6800P	1	
C4204	ECA1HXLV330	E.CAPACITOR 50V 33U	1	
C4205	ECUM1H103KBN	C.CAPACITOR CH 50V 0.01U	1	
C4206,07	ECA1CXLV470	E.CAPACITOR 16V 47U	2	
C4211	ECCF1H680JC5	C.CAPACITOR 50V 68P	1	
C4212	ECQV1H104JZ	P.CAPACITOR 50V 0.1U	1	
D4001	MA3100	DIODE	1	

Ref.No.	Part No.	Part Name & Description	Pcs	Remarks
D4002	MA151K	DIODE	1	
D4003	MA151WK	DIODE	1	
D4004	MA153	DIODE	1	
D4005-11	MA151K	DIODE	7	
D4012,13	MA153	DIODE	2	
D4014-16	MA151K	DIODE	3	
D4017	MA153	DIODE	1	
D4018-20	MA151K	DIODE	3	
D4023-30	0A95	DIODE	8	
D4031	MA151K	DIODE	1	
FL4001	VLQ0142	COIL	1	
FL4002	EIR7QG010B	FILTER	1	
FL4003	VLF0427	FILTER	1	
FL4004	VLQ0190	COIL	1	
FL4005	VLQ0142	COIL	1	
FL4006	EIR7QH002B	FILTER	1	
FL4007	VLF0427	FILTER	1	
IC4001	MC14011BF	IC	1	
IC4002	MC14538BF	IC	1	
IC4003	NJM4558M	IC	1	
IC4004	BA301	IC	1	
IC4005,06	LM318N	IC	2	
IC4007	MN6631A	IC	1	
IC4008	LM318N	IC	1	
IC4009	NJM5532MD	IC	1	
IC4010	MN6631A	IC	1	
IC4011	NJM4558M	IC	1	
IC4012	M5206P	IC	1	
IC4013,14	NJM4558M	IC	2	
IC4015	AN6558S	IC	1	
IC4016,17	NJM4558M	IC	2	
IC4018	UPC451G	IC	1	
IC4019	UPC339G2	IC	1	
IC4020	MC14012BF	IC	1	
L4001-03	VLQEL05S471J	COIL 470UH	3	
L4004	VLQ0228	COIL	1	
L4005	VLQEL05S471J	COIL 470UH	1	
L4006	VLQ0228	COIL	1	
L4007	VLQEL05S471J	COIL 470UH	1	
L4008	VLQ0228	COIL	1	
L4009-11	VLQEL05S471J	COIL 470UH	3	
P205,06	VJP3151	CONNECTOR (MALE)	2	
P4001	VJP1243T	CONNECTOR (MALE)	1	
P4002	VJP1243G	CONNECTOR (MALE)	1	
P4003	VJP1243R	CONNECTOR (MALE)	1	
P4004	VJP1243T	CONNECTOR (MALE)	1	
P4005	VJP1243G	CONNECTOR (MALE)	1	
Q4001	2SC1847	TRANSISTOR	1	
Q4002	2SD601-R	TRANSISTOR	1	
Q4003	2SB709-R	TRANSISTOR	1	
Q4004,05	UN2213	TRANSISTOR	2	
Q4006	2SD601-R	TRANSISTOR	1	
Q4007	2SC1318A-R	TRANSISTOR	1	
Q4008	2SB709-R	TRANSISTOR	1	
Q4009	UN2213	TRANSISTOR	1	
Q4010	2SB709-R	TRANSISTOR	1	
Q4011	2SC1318A-R	TRANSISTOR	1	
Q4012,13	2SC2497A-R	TRANSISTOR	2	
Q4014,15	2SB709-R	TRANSISTOR	2	
Q4016	2SC1318A-R	TRANSISTOR	1	

Ref.No.	Part No.	Part Name & Description	Pcs	Remarks
Q4017,18	2SC2497A-R	TRANSISTOR	2	
Q4019,20	2SC2925	TRANSISTOR	2	
Q4021,22	2SB709-R	TRANSISTOR	2	
Q4023	2SC1318A-R	TRANSISTOR	1	
Q4024,25	2SC2497A-R	TRANSISTOR	2	
Q4026,27	2SC2925	TRANSISTOR	2	
Q4028,29	2SB709-R	TRANSISTOR	2	
Q4030	2SC1318A-R	TRANSISTOR	1	
Q4031,32	2SC2497A-R	TRANSISTOR	2	
Q4033,34	2SC2925	TRANSISTOR	2	
Q4035	2SB709-R	TRANSISTOR	1	
Q4036-38	2SC1318A-R	TRANSISTOR	3	
Q4039	2SB709-R	TRANSISTOR	1	
Q4040-42	2SC1318A-R	TRANSISTOR	3	
Q4043,44	UN2213	TRANSISTOR	2	
Q4045	2SD601-R	TRANSISTOR	1	
Q4046	UN2213	TRANSISTOR	1	
Q4047	2SD601-R	TRANSISTOR	1	
Q4048	2SD602-R	TRANSISTOR	1	
Q4049	2SB710-R	TRANSISTOR	1	
Q4050	2SD601-R	TRANSISTOR	1	
Q4051,52	2SD1149-R	TRANSISTOR	2	
Q4053	2SA1018-R	TRANSISTOR	1	
Q4054	2SD601-R	TRANSISTOR	1	
Q4055	UN2213	TRANSISTOR	1	
Q4056,57	2SD601-R	TRANSISTOR	2	
Q4058	UN2213	TRANSISTOR	1	
Q4059	2SD601-R	TRANSISTOR	1	
Q4060	UN2113	TRANSISTOR	1	
Q4061	UN2213	TRANSISTOR	1	
Q4062,63	2SD602-R	TRANSISTOR	2	
Q4064,65	2SB710-R	TRANSISTOR	2	
Q4066,67	2SD601-R	TRANSISTOR	2	
Q4068,69	2SD1149-R	TRANSISTOR	2	
Q4070	2SA1018-R	TRANSISTOR	1	
Q4071	2SK146	TRANSISTOR	1	
Q4072-75	UN2213	TRANSISTOR	4	
Q4076	2SD601-R	TRANSISTOR	1	
Q4077	2SB709-R	TRANSISTOR	1	
Q4078	UN2213	TRANSISTOR	1	
Q4080	MSD601-R	TRANSISTOR	1	
Q4081-84	2SD601-R	TRANSISTOR	4	
Q4086	UN2213	TRANSISTOR	1	
Q4091,92	2SC1318A-R	TRANSISTOR	2	
		RESISTORS		
R4001	ERJ6GEYJ331	M.RESISTOR CH1/10W 330	1	
R4002	ERJ6GEYJ223	M.RESISTOR CH1/10W 22K	1	
R4003,04	ERJ6GEYJ562	M.RESISTOR CH1/10W 5.6K	2	
R4005	ERJ6GEYJ332	M.RESISTOR CH1/10W 3.3K	1	
R4006	ERJ6GEYJ392	M.RESISTOR CH1/10W 3.9K	1	
R4007,08	ERJ6GEYJ103	M.RESISTOR CH1/10W 10K	2	
R4009	ERJ6GEYF333	M.RESISTOR CH1/10W 33K	1	
R4010	ERJ6GEYJ101	M.RESISTOR CH1/10W 100	1	
R4011	ERJ6GEYJ274	M.RESISTOR CH1/10W 270K	1	
R4012,13	ERJ6GEYJ223	M.RESISTOR CH1/10W 22K	2	
R4014,15	ERJ6GEYJ683	M.RESISTOR CH1/10W 68K	2	
R4016,17	ERJ6GEYJ103	M.RESISTOR CH1/10W 10K	2	
R4018	ERJ6GEYJ222	M.RESISTOR CH1/10W 2.2K	1	
R4019	ERJ6GEYJ103	M.RESISTOR CH1/10W 10K	1	
R4020	ERJ6GEYG153	M.RESISTOR CH1/10W 15K	1	
R4021	ERJ6GEYJ332	M.RESISTOR CH1/10W 3.3K	1	
R4022,23	ERJ6GEYJ220	M.RESISTOR CH1/10W 22	2	
R4024,25	ERJ6GEYJ104	M.RESISTOR CH1/10W 100K	2	
R4026	ERJ6GEYJ103	M.RESISTOR CH1/10W 10K	1	
R4027	ERG12SJ100	M.RESISTOR 1/2W 10	1	
R4028	ERDS2TJ1R0	C.RESISTOR 1/4W 1.0	1	
R4029	ERJ6GEYJ222	M.RESISTOR CH1/10W 2.2K	1	
R4030	ERJ6GEYJ103	M.RESISTOR CH1/10W 10K	1	
R4031	ERJ6GEYJ682	M.RESISTOR CH1/10W 6.8K	1	
R4032	ERJ6GEYG153	M.RESISTOR CH1/10W 15K	1	
R4033	ERJ6GEYJ272	M.RESISTOR CH1/10W 2.7K	1	
R4034,35	ERJ6GEYJ220	M.RESISTOR CH1/10W 22	2	

Ref.No.	Part No.	Part Name & Description	Pcs	Remarks
R4036,37	ERJ6GEYJ104	M.RESISTOR CH1/10W 100K	2	
R4038	ERJ6GEYJ103	M.RESISTOR CH1/10W 10K	1	
R4039	ERJ6GEYF472	M.RESISTOR CH1/10W 4.7K	1	
R4040	ERG12SJ100	M.RESISTOR 1/2W 10	1	
R4041	ERJ6GEYJ102	M.RESISTOR CH1/10W 1K	1	
R4042,43	ERJ6GEYJ222	M.RESISTOR CH1/10W 2.2K	2	
R4044	ERDS2TJ1R0	C.RESISTOR 1/4W 1.0	1	
R4045	ERJ6GEYJ222	M.RESISTOR CH1/10W 2.2K	1	
R4046	ERJ6GEYJ103	M.RESISTOR CH1/10W 10K	1	
R4047	ERJ6GEYJ682	M.RESISTOR CH1/10W 6.8K	1	
R4048	ERJ6GEYG153	M.RESISTOR CH1/10W 15K	1	
R4049	ERJ6GEYJ272	M.RESISTOR CH1/10W 2.7K	1	
R4050,51	ERJ6GEYJ220	M.RESISTOR CH1/10W 22	2	
R4052,53	ERJ6GEYJ104	M.RESISTOR CH1/10W 100K	2	
R4054	ERJ6GEYJ103	M.RESISTOR CH1/10W 10K	1	
R4055	ERJ6GEYF472	M.RESISTOR CH1/10W 4.7K	1	
R4056	ERG12SJ100	M.RESISTOR 1/2W 10	1	
R4057	ERJ6GEYJ102	M.RESISTOR CH1/10W 1K	1	
R4058,59	ERJ6GEYJ222	M.RESISTOR CH1/10W 2.2K	2	
R4060	ERDS2TJ1R0	C.RESISTOR 1/4W 1.0	1	
R4061	ERJ6GEYJ222	M.RESISTOR CH1/10W 2.2K	1	
R4062	ERJ6GEYJ103	M.RESISTOR CH1/10W 10K	1	
R4063	ERJ6GEYJ682	M.RESISTOR CH1/10W 6.8K	1	
R4064	ERJ6GEYG153	M.RESISTOR CH1/10W 15K	1	
R4065	ERJ6GEYJ272	M.RESISTOR CH1/10W 2.7K	1	
R4066,67	ERJ6GEYJ220	M.RESISTOR CH1/10W 22	2	
R4068,69	ERJ6GEYJ104	M.RESISTOR CH1/10W 100K	2	
R4070	ERJ6GEYJ103	M.RESISTOR CH1/10W 10K	1	
R4071	ERJ6GEYF472	M.RESISTOR CH1/10W 4.7K	1	
R4072	ERG12SJ100	M.RESISTOR 1/2W 10	1	
R4073	ERJ6GEYJ102	M.RESISTOR CH1/10W 1K	1	
R4074,75	ERJ6GEYJ222	M.RESISTOR CH1/10W 2.2K	2	
R4076	ERDS2TJ1R0	C.RESISTOR 1/4W 1.0	1	
R4077	ERJ6GEYJ222	M.RESISTOR CH1/10W 2.2K	1	
R4078	ERJ6GEYJ103	M.RESISTOR CH1/10W 10K	1	
R4079	ERJ6GEYJ682	M.RESISTOR CH1/10W 6.8K	1	
R4080	ERJ6GEYG153	M.RESISTOR CH1/10W 15K	1	
R4081	ERJ6GEYJ272	M.RESISTOR CH1/10W 2.7K	1	
R4084,85	ERJ6GEYJ154	M.RESISTOR CH1/10W 150K	2	
R4086	ERJ6GEYJ103	M.RESISTOR CH1/10W 10K	1	
R4087	ERJ6GEYJ152	M.RESISTOR CH1/10W 1.5K	1	
R4088	ERG12SJ330	M.RESISTOR 1/2W 33	1	
R4089	ERJ6GEYJ222	M.RESISTOR CH1/10W 2.2K	1	
R4090	ERJ6GEYJ103	M.RESISTOR CH1/10W 10K	1	
R4091	ERJ6GEYJ682	M.RESISTOR CH1/10W 6.8K	1	
R4092	ERJ6GEYG153	M.RESISTOR CH1/10W 15K	1	
R4093	ERJ6GEYJ272	M.RESISTOR CH1/10W 2.7K	1	
R4094,95	ERJ6GEYJ220	M.RESISTOR CH1/10W 22	2	
R4096,97	ERJ6GEYJ154	M.RESISTOR CH1/10W 150K	2	
R4098	ERJ6GEYJ103	M.RESISTOR CH1/10W 10K	1	
R4099	ERJ6GEYJ152	M.RESISTOR CH1/10W 1.5K	1	
R4100	ERG12SJ330	M.RESISTOR 1/2W 33	1	
R4101,02	ERJ6GEYJ394	M.RESISTOR CH1/10W 390K	2	
R4103	ERJ6GEYJ102	M.RESISTOR CH1/10W 1K	1	
R4104,05	ERJ6GEYJ563	M.RESISTOR CH1/10W 56K	2	
R4106-08	ERJ6GEYJ103	M.RESISTOR CH1/10W 10K	3	
R4109	ERJ6GEYJ392	M.RESISTOR CH1/10W 3.9K	1	
R4110	ERJ6GEYJ223	M.RESISTOR CH1/10W 22K	1	
R4111	ERJ6GEYJ103	M.RESISTOR CH1/10W 10K	1	
R4112,13	ERJ6GEYJ331	M.RESISTOR CH1/10W 330	2	
R4114	ERJ6GEYJ223	M.RESISTOR CH1/10W 22K	1	
R4115	ERJ6GEYJ392	M.RESISTOR CH1/10W 3.9K	1	
R4116	ERJ6GEYJ223	M.RESISTOR CH1/10W 22K	1	
R4117	ERJ6GEYJ103	M.RESISTOR CH1/10W 10K	1	
R4118	ERJ6GEYJ682	M.RESISTOR CH1/10W 6.8K	1	
R4119	ERJ6GEYJ272	M.RESISTOR CH1/10W 2.7K	1	
R4120	ERJ6GEYJ562	M.RESISTOR CH1/10W 5.6K	1	
R4121,22	ERJ6GEYJ103	M.RESISTOR CH1/10W 10K	2	
R4123	ERJ6GEYJ100	M.RESISTOR CH1/10W 10	1	
R4124	ERJ6GEYJ182	M.RESISTOR CH1/10W 1.8K	1	
R4125	ERJ6GEYF472	M.RESISTOR CH1/10W 4.7K	1	
R4126	ERJ6GEYJ561	M.RESISTOR CH1/10W 560	1	
R4127	ERJ6GEYJ101	M.RESISTOR CH1/10W 100	1	
R4128	ERJ6GEYJ332	M.RESISTOR CH1/10W 3.3K	1	
R4129	ERJ6GEYJ473	M.RESISTOR CH1/10W 47K	1	

Ref.No.	Part No.	Part Name & Description	Pcs	Remarks
R4130	ERJ6GEYJ154	M.RESISTOR CH1/10W 150K	1	
R4131	ERJ6GEYJ103	M.RESISTOR CH1/10W 10K	1	
R4132	ERJ6GEYJ561	M.RESISTOR CH1/10W 560	1	
R4133	ERJ6GEYJ102	M.RESISTOR CH1/10W 1K	1	
R4134	ERJ6GEYJ103	M.RESISTOR CH1/10W 10K	1	
R4135	ERJ6GEYG153	M.RESISTOR CH1/10W 15K	1	
R4136	ERJ6GEYF472	M.RESISTOR CH1/10W 4.7K	1	
R4137	ERJ6GEYJ122	M.RESISTOR CH1/10W 1.2K	1	
R4138	ERJ6GEYJ104	M.RESISTOR CH1/10W 100K	1	
R4139,40	ERJ6GEYJ101	M.RESISTOR CH1/10W 100	2	
R4141	ERJ6GEYJ103	M.RESISTOR CH1/10W 10K	1	
R4142	ERJ6GEYF472	M.RESISTOR CH1/10W 4.7K	1	
R4143	ERJ6GEYJ182	M.RESISTOR CH1/10W 1.8K	1	
R4144	ERJ6GEYJ823	M.RESISTOR CH1/10W 82K	1	
R4145,46	ERJ6GEYJ101	M.RESISTOR CH1/10W 100	2	
R4147	ERJ6GEYJ103	M.RESISTOR CH1/10W 10K	1	
R4148	ERJ6GEYJ222	M.RESISTOR CH1/10W 2.2K	1	
R4149	ERJ6GEYF472	M.RESISTOR CH1/10W 4.7K	1	
R4150	ERJ6GEYJ182	M.RESISTOR CH1/10W 1.8K	1	
R4151,52	ERJ6GEYJ101	M.RESISTOR CH1/10W 100	2	
R4153	ERJ6GEYJ103	M.RESISTOR CH1/10W 10K	1	
R4154	ERJ6GEYJ561	M.RESISTOR CH1/10W 560	1	
R4155,56	ERJ6GEYJ103	M.RESISTOR CH1/10W 10K	2	
R4157	ERJ6GEYJ102	M.RESISTOR CH1/10W 1K	1	
R4158,59	ERJ6GEYJ563	M.RESISTOR CH1/10W 56K	2	
R4160	ERJ6GEYJ103	M.RESISTOR CH1/10W 10K	1	
R4161	ERJ6GEYJ392	M.RESISTOR CH1/10W 3.9K	1	
R4162	ERJ6GEYJ223	M.RESISTOR CH1/10W 22K	1	
R4163	ERJ6GEYJ473	M.RESISTOR CH1/10W 47K	1	
R4164	ERJ6GEYJ104	M.RESISTOR CH1/10W 100K	1	
R4165-68	ERJ6GEYJ103	M.RESISTOR CH1/10W 10K	4	
R4169,70	ERJ6GEYJ104	M.RESISTOR CH1/10W 100K	2	
R4171-74	ERJ6GEYJ331	M.RESISTOR CH1/10W 330	4	
R4175-78	VRE0034E472	M.RESISTOR CH 1/10W 4.7K	4	
R4179	ERJ6GEYJ103	M.RESISTOR CH1/10W 10K	1	
R4180-83	VRE0034E472	M.RESISTOR CH 1/10W 4.7K	4	
R4184	ERJ6GEYJ272	M.RESISTOR CH1/10W 2.7K	1	
R4185	ERJ6GEYJ332	M.RESISTOR CH1/10W 3.3K	1	
R4186,87	ERJ6GEYF472	M.RESISTOR CH1/10W 4.7K	2	
R4188	ERJ6GEYJ103	M.RESISTOR CH1/10W 10K	1	
R4189	ERJ6GEYJ332	M.RESISTOR CH1/10W 3.3K	1	
R4190	ERJ6GEYJ221	M.RESISTOR CH1/10W 220	1	
R4191	ERJ6GEYJ822	M.RESISTOR CH1/10W 8.2K	1	
R4192	ERJ6GEYJ682	M.RESISTOR CH1/10W 6.8K	1	
R4193	ERJ6GEYJ473	M.RESISTOR CH1/10W 47K	1	
R4194	ERJ6GEYJ103	M.RESISTOR CH1/10W 10K	1	
R4195	ERJ6GEYJ222	M.RESISTOR CH1/10W 2.2K	1	
R4196	ERJ6GEY0R00	C.RESISTOR 1/10W 0	1	
R4197	ERJ6GEYJ103	M.RESISTOR CH1/10W 10K	1	
R4198	ERJ6GEYF472	M.RESISTOR CH1/10W 4.7K	1	
R4199	ERJ6GEYJ103	M.RESISTOR CH1/10W 10K	1	
R4200	ERJ6GEYF472	M.RESISTOR CH1/10W 4.7K	1	
R4201	ERJ6GEYJ102	M.RESISTOR CH1/10W 1K	1	
R4202	ERJ6GEYJ392	M.RESISTOR CH1/10W 3.9K	1	
R4204	ERJ6GEYJ471	M.RESISTOR CH1/10W 470	1	
R4205	ERJ6GEYJ103	M.RESISTOR CH1/10W 10K	1	
R4206	ERJ6GEYJ100	M.RESISTOR CH1/10W 10	1	
R4207	ERJ6GEYJ103	M.RESISTOR CH1/10W 10K	1	
R4208	ERJ6GEYF472	M.RESISTOR CH1/10W 4.7K	1	
R4209	ERJ6GEYJ561	M.RESISTOR CH1/10W 560	1	
R4210	ERJ6GEYJ473	M.RESISTOR CH1/10W 47K	1	
R4211	ERJ6GEYJ103	M.RESISTOR CH1/10W 10K	1	
R4212	ERJ6GEYJ332	M.RESISTOR CH1/10W 3.3K	1	
R4213-15	VRE0034E272	M.RESISTOR CH 1/10W 2.7K	3	
R4216	ERJ6GEYJ470	M.RESISTOR CH1/10W 47	1	
R4217	ERJ6GEYJ104	M.RESISTOR CH1/10W 100K	1	
R4218	ERJ6GEYJ103	M.RESISTOR CH1/10W 10K	1	
R4219,20	ERJ6GEYJ102	M.RESISTOR CH1/10W 1K	2	
R4221	ERJ6GEYJ392	M.RESISTOR CH1/10W 3.9K	1	
R4222,23	ERJ6GEYJ101	M.RESISTOR CH1/10W 100	2	
R4224-27	ERJ6GEYJ103	M.RESISTOR CH1/10W 10K	4	
R4228	ERJ6GEYJ561	M.RESISTOR CH1/10W 560	1	
R4229	ERJ6GEYJ101	M.RESISTOR CH1/10W 100	1	
R4230	ERJ6GEYJ221	M.RESISTOR CH1/10W 220	1	
R4231	ERJ6GEYJ103	M.RESISTOR CH1/10W 10K	1	

Ref.No.	Part No.	Part Name & Description	Pcs	Remarks
R4232	ERJ6GEYJ221	M.RESISTOR CH1/10W 220	1	
R4233	ERJ6GEYJ332	M.RESISTOR CH1/10W 3.3K	1	
R4234	ERJ6GEYJ473	M.RESISTOR CH1/10W 47K	1	
R4235	ERJ6GEYF472	M.RESISTOR CH1/10W 4.7K	1	
R4236	ERJ6GEYJ682	M.RESISTOR CH1/10W 6.8K	1	
R4237	ERJ6GEYJ103	M.RESISTOR CH1/10W 10K	1	
R4238	ERJ6GEYJ272	M.RESISTOR CH1/10W 2.7K	1	
R4239	ERJ6GEYJ332	M.RESISTOR CH1/10W 3.3K	1	
R4240	ERJ6GEYJ102	M.RESISTOR CH1/10W 1K	1	
R4241	ERJ6GEYJ103	M.RESISTOR CH1/10W 10K	1	
R4242	ERJ6GEYJ332	M.RESISTOR CH1/10W 3.3K	1	
R4243	ERJ6GEYJ103	M.RESISTOR CH1/10W 10K	1	
R4244	ERJ6GEYF472	M.RESISTOR CH1/10W 4.7K	1	
R4245	ERJ6GEYJ822	M.RESISTOR CH1/10W 8.2K	1	
R4246	ERJ6GEYJ103	M.RESISTOR CH1/10W 10K	1	
R4247,48	ERJ6GEYJ272	M.RESISTOR CH1/10W 2.7K	2	
R4251,52	ERJ6GEYJ103	M.RESISTOR CH1/10W 10K	2	
R4253	ERJ6GEYJ272	M.RESISTOR CH1/10W 2.7K	1	
R4254	ERJ6GEYG153	M.RESISTOR CH1/10W 15K	1	
R4255	ERJ6GEYJ221	M.RESISTOR CH1/10W 220	1	
R4256	ERJ6GEYJ222	M.RESISTOR CH1/10W 2.2K	1	
R4257	ERJ6GEYG153	M.RESISTOR CH1/10W 15K	1	
R4258	ERJ6GEYJ103	M.RESISTOR CH1/10W 10K	1	
R4259	ERJ6GEYJ122	M.RESISTOR CH1/10W 1.2K	1	
R4260	ERJ6GEYJ562	M.RESISTOR CH1/10W 5.6K	1	
R4261	ERJ6GEYJ103	M.RESISTOR CH1/10W 10K	1	
R4262	ERJ6GEYJ272	M.RESISTOR CH1/10W 2.7K	1	
R4263	ERJ6GEYG153	M.RESISTOR CH1/10W 15K	1	
R4264	ERJ6GEYJ221	M.RESISTOR CH1/10W 220	1	
R4265	ERJ6GEYJ222	M.RESISTOR CH1/10W 2.2K	1	
R4266	ERJ6GEYG153	M.RESISTOR CH1/10W 15K	1	
R4267	ERJ6GEYJ562	M.RESISTOR CH1/10W 5.6K	1	
R4268	ERJ6GEYJ103	M.RESISTOR CH1/10W 10K	1	
R4269	ERJ6GEYJ272	M.RESISTOR CH1/10W 2.7K	1	
R4270	ERJ6GEYG153	M.RESISTOR CH1/10W 15K	1	
R4271	ERJ6GEYJ221	M.RESISTOR CH1/10W 220	1	
R4272	ERJ6GEYJ222	M.RESISTOR CH1/10W 2.2K	1	
R4273	ERJ6GEYG153	M.RESISTOR CH1/10W 15K	1	
R4274	ERJ6GEYJ562	M.RESISTOR CH1/10W 5.6K	1	
R4275	ERJ6GEYJ103	M.RESISTOR CH1/10W 10K	1	
R4276	ERJ6GEYJ272	M.RESISTOR CH1/10W 2.7K	1	
R4277	ERJ6GEYG153	M.RESISTOR CH1/10W 15K	1	
R4278	ERJ6GEYJ221	M.RESISTOR CH1/10W 220	1	
R4279	ERJ6GEYJ222	M.RESISTOR CH1/10W 2.2K	1	
R4280	ERJ6GEYG153	M.RESISTOR CH1/10W 15K	1	
R4281	ERJ6GEYJ562	M.RESISTOR CH1/10W 5.6K	1	
R4285	ERJ6GEYJ103	M.RESISTOR CH1/10W 10K	1	
R4291,92	ERJ6GEYJ394	M.RESISTOR CH1/10W 390K	2	
R4293-95	ERJ6GEYJ220	M.RESISTOR CH1/10W 22	3	
R4296	ERJ6GEYJ332	M.RESISTOR CH1/10W 3.3K	1	
R4301	ERDS2TJ681	C.RESISTOR 1/4W 680	1	
T4001	VLT0540	TRANSFORMER	1	
T4002-05	VLT0302	TRANSFORMER	4	
T4006	VLT0304	TRANSFORMER	1	
T4007	VLT0303	TRANSFORMER	1	
T4008	VLT0545	TRANSFORMER	1	
TP4001-18	VJR0646	TEST POINT	18	
TPG4001-05	VJR0646	TEST POINT	5	
VR4001	VRV0109B103	V.RESISTOR 10K	1	
VR4002,03	VRV0109B104	V.RESISTOR 100K	2	
VR4004,05	VRV0109B103	V.RESISTOR 10K	2	
VR4006,07	VRV0109B502	V.RESISTOR 5K	2	
VR4008	VRV0109B103	V.RESISTOR 10K	1	
VR4009,10	VRV0109B502	V.RESISTOR 5K	2	
VR4011-13	VRV0109B103	V.RESISTOR 10K	3	
VR4014	VRV0109B501	V.RESISTOR 500	1	

S4

S4 AT VEP82065C
S4 SUB VEP82078A

Ref.No.	Part No.	Part Name & Description	Pcs	Remarks
		MISCELLANEOUS		
	VGQ0291	P.C.BOARD NAME PLATE	1	
	VML2143	CARD PULLER	1	
	VML2144	CARD PULLER	1	
	VXA4420	P.C.BOARD SHIELD PLATE	1	
	XNG26E	NUT	4	
	XTV3+6FFR	SCREW	5	
	XYN26+C12	SCREW	4	
	VEP82065C	P.C.BOARD W/COMPONENT		
		S4 AT		
	VEP82078A	P.C.BOARD W/COMPONENT		FOR VEP82065C
		S4 SUB		
		CAPACITORS		
C2601	ECQB1H561JF	P.CAPACITOR 50V 560P	1	
C2602	ECUM1H103KBN	C.CAPACITOR CH 50V 0.01U	1	
C2603,04	ECUM1H330JCN	C.CAPACITOR CH 50V 33P	2	
C2605	ECUM1H102JCN	C.CAPACITOR CH 50V 1000P	1	
C2606-08	ECUM1H104KBM	C.CAPACITOR CH 50V 0.1U	3	
C2609,10	ECUM1H121JCN	C.CAPACITOR CH 50V 120P	2	
C2611	ECCF1H090DC	C.CAPACITOR 50V 9P	1	
C2612,13	ECUM1H104KBM	C.CAPACITOR CH 50V 0.1U	2	
C2614	ECUM1H103KBN	C.CAPACITOR CH 50V 0.01U	1	
C2615	ECA1HXLV330	E.CAPACITOR 50V 33U	1	
C2616	ECUM1H103KBN	C.CAPACITOR CH 50V 0.01U	1	
C2617	ECUM1H151JCN	C.CAPACITOR CH 50V 150P	1	
C2618,19	ECUM1H102JCN	C.CAPACITOR CH 50V 1000P	2	
C2620,21	ECUM1H151JCN	C.CAPACITOR CH 50V 150P	2	
C2622	ECKF1H103KB	C.CAPACITOR 50V 0.01U	1	
C2623,24	ECUM1H103KBN	C.CAPACITOR CH 50V 0.01U	2	
C2625	ECA1HXLV010	E.CAPACITOR 50V 1U	1	
C2626-31	ECA1HXLV330	E.CAPACITOR 50V 33U	6	
C2632	ECUM1H103KBN	C.CAPACITOR CH 50V 0.01U	1	
C2633	ECA1HXLV100	E.CAPACITOR 50V 10U	1	
C2634	ECA1HXLV330	E.CAPACITOR 50V 33U	1	
C2635-37	ECUM1H472KBN	C.CAPACITOR CH 50V 4700P	3	
C2640,41	ECUM1H104KBM	C.CAPACITOR CH 50V 0.1U	2	
C2642-49	ECUM1H223KBN	C.CAPACITOR CH 50V 0.022U	8	
C2650,51	ECUM1E473KBN	C.CAPACITOR CH 25V 0.047U	2	
C2652,53	ECUM1H220JCN	C.CAPACITOR CH 50V 22P	2	
C2654	ECUM1H103KBN	C.CAPACITOR CH 50V 0.01U	1	
C2655	ECA1HXLV100	E.CAPACITOR 50V 10U	1	
C2656	ECA1HXLV330	E.CAPACITOR 50V 33U	1	
C2657-60	ECUM1H273KBN	C.CAPACITOR CH 50V 0.027U	4	
C2661,62	ECUM1H123KBN	C.CAPACITOR CH 50V 0.012U	2	
C2663,64	ECUM1H683KBM	C.CAPACITOR CH 50V 0.068U	2	
C2665,66	ECUM1H104ZFN	C.CAPACITOR CH 50V 0.1U	2	
C2667-70	ECUM1H391JCN	C.CAPACITOR CH 50V 390P	4	
C2671-83	ECUM1H104KBM	C.CAPACITOR CH 50V 0.1U	13	
C2684,85	ECUM1H104ZFN	C.CAPACITOR CH 50V 0.1U	2	
C2686-91	ECUM1H103KBN	C.CAPACITOR CH 50V 0.01U	6	
C2696,97	ECUM1H104KBM	C.CAPACITOR CH 50V 0.1U	2	
C2698,99	ECA1HXLV100	E.CAPACITOR 50V 10U	2	
C2700-02	ECA1HXLV330	E.CAPACITOR 50V 33U	3	
C2703	ECUM1H103KBN	C.CAPACITOR CH 50V 0.01U	1	
C2704,05	ECA1HXLV330	E.CAPACITOR 50V 33U	2	
C2706	ECUM1H103KBN	C.CAPACITOR CH 50V 0.01U	1	
C2707-12	ECUM1H104KBM	C.CAPACITOR CH 50V 0.1U	6	
C2713-17	ECUM1H103KBN	C.CAPACITOR CH 50V 0.01U	5	
C2718,19	ECA1HXLV100	E.CAPACITOR 50V 10U	2	
C2720,21	ECUM1H103KBN	C.CAPACITOR CH 50V 0.01U	2	
C2722	ECA1HXLV100	E.CAPACITOR 50V 10U	1	
C2722	ECQB1H273JF	P.CAPACITOR 50V 0.027U	1	

Ref.No.	Part No.	Part Name & Description	Pcs	Remarks
C2723,24	ECUM1H103KBN	C.CAPACITOR CH 50V 0.01U	2	
C2725,26	ECA1HXNV010	E.CAPACITOR 50V 1U	2	
C2727-29	ECUM1H104KBM	C.CAPACITOR CH 50V 0.1U	3	
D2601-06	MA157	DIODE	6	
D2607-10	LN25RP	LED	4	
D2611-14	MA3039-H	DIODE	4	
D2615-22	MA157	DIODE	8	
D2623,24	MA3039-H	DIODE	2	
D2625,26	MA151K	DIODE	2	
D2627	MA151WA	DIODE	1	
D2628,29	MA151K	DIODE	2	
IC2601	MC74HC4538A	IC	1	
IC2602,03	DAC1220LCN	IC	2	
IC2604	UPC4074G	IC	1	
IC2605	UPC4741G2	IC	1	
IC2606	MC10125L	IC	1	
IC2607	NE564D	IC	1	
IC2608	74AC74SJ	IC	1	
IC2609	MC74HCU04F	IC	1	
IC2610	MN53030VPT	IC	1	
IC2611	VSI0894B	IC	1	
IC2612	MC74HC161AF	IC	1	
IC2613	MSM5210RS	IC	1	
IC2614	UPC4741G2	IC	1	
IC2615	MSM5210RS	IC	1	
IC2616	MC74HC86F	IC	1	
IC2617	UPC4558G2	IC	1	
IC2618	MN188166VHI5	IC	1	
IC2619	M51951BML	IC	1	
IC2620,21	UPC4074G	IC	2	
IC2622	TL431CLP	DIODE	1	
IC2623	UPC4558G2	IC	1	
IC2624	UPC4741G2	IC	1	
IC2625,26	UPD4053BG	IC	2	
IC2627-30	UPC4741G2	IC	4	
IC2631,32	UPC4572G2	IC	2	
IC2633	UPC4741G2	IC	1	
IC2634,35	UPD4051BG	IC	2	
IC2636-38	TC74HC193AF	IC	3	
IC2640	MC74HC244AF	IC	1	
IC2641	MC74HC00AF	IC	1	
IC2642	74AC74SJ	IC	1	
IC2643	UPC4558G2	IC	1	
IC2644	MC74HC08AF	IC	1	
IC2645,46	MC74HC4050F	IC	2	
IC2647	CD74AC00M	IC	1	
IC2648-51	UPC4558G2	IC	4	
IC2652,53	UPC393G2	IC	2	
IC2654	MC74HC08AF	IC	1	
IC2655	MC74HC74AF	IC	1	
IC2656	MC74HC27F	IC	1	
IC2657	VSI1084F	IC	1	
IC2658	MB8464A80LFF	IC	1	
IC2659	VSI0896	IC	1	
IC2660,61	MC74HC257F	IC	2	
IC2662	VSI0897	IC	1	
IC2663,64	MC74HC574AF	IC	2	
IC2665-68	MC74HC273AF	IC	4	
IC2669-72	MC74HC85F	IC	4	
IC2673	VSI0895A	IC	1	
IC2674-76	TC74HC283AF	IC	3	
IC2677-79	MC74HC157AF	IC	3	
IC2680	MC74HC04AF	IC	1	
IC2681	AN78L05	IC	1	
IC2682,83	UPC4741G2	IC	2	
IC2684	UPD4053BG	IC	1	
IC2685	UPC4558G2	IC	1	
IC2686	AN79L05	IC	1	
IC2687,88	MC74HC4053F	IC	2	

Ref.No.	Part No.	Part Name & Description	Pcs	Remarks
IC2689,90	UPC4082G2	IC	2	
IC2691	MC74HC4538A	IC	1	
IC2692	MC74HC02AF	IC	1	
ICS2611	VJS3096328	CONNECTOR (FEMALE)	1	
ICS2657	VJS2726	CONNECTOR (FEMALE)	1	
ICS2659	VJS3096328	CONNECTOR (FEMALE)	1	
ICS2662	VJS3096328	CONNECTOR (FEMALE)	1	
ICS2673	VJS3096328	CONNECTOR (FEMALE)	1	
L2601	VLQ0128	COIL	1	
L2602	VLQEL05S101K	COIL 100UH	1	
L2603	VLQ0128	COIL	1	
L2604-06	VLQEL05S101K	COIL 100UH	3	
P2207,08	VJP3151	CONNECTOR (MALE)	2	
P2602	VJS1435	CONNECTOR (FEMALE)	1	
Q2601-04	UN2213	TRANSISTOR	4	
Q2605,06	MSB709-R	TRANSISTOR	2	
Q2607,08	MSD601-R	TRANSISTOR	2	
		RESISTORS		
R2601	ERDS2TJ103	C.RESISTOR 1/4W 10K	1	
R2602	ERJ6GEYJ105	M.RESISTOR CH1/10W 1M	1	
R2603	ERJ6GEYJ102	M.RESISTOR CH1/10W 1K	1	
R2604	ERJ6GEYJ221	M.RESISTOR CH1/10W 220	1	
R2605	ERJ6GEYJ331	M.RESISTOR CH1/10W 330	1	
R2606,07	ERJ6GEYF472	M.RESISTOR CH1/10W 4.7K	2	
R2608	ERJ6GEYJ222	M.RESISTOR CH1/10W 2.2K	1	
R2609,10	ERJ6GEYJ101	M.RESISTOR CH1/10W 100	2	
R2611	VRE0034E100	M.RESISTOR CH 1/10W 10	1	
R2612	VRE0034E102	M.RESISTOR CH 1/10W 1K	1	
R2613-16	VRE0034E273	M.RESISTOR CH 1/10W 27K	4	
R2619,20	ERJ6GEYJ104	M.RESISTOR CH1/10W 100K	2	
R2621,22	ERJ6GEYJ223	M.RESISTOR CH1/10W 22K	2	
R2623,24	ERJ6GEYJ183	M.RESISTOR CH1/10W 18K	2	
R2625	ERJ6GEYJ561	M.RESISTOR CH1/10W 560	1	
R2630	ERJ6GEYJ102	M.RESISTOR CH1/10W 1K	1	
R2631	VRE0034E222	M.RESISTOR CH 1/10W 2.2K	1	
R2632,33	VRE0034E332	M.RESISTOR CH 1/10W 3.3K	2	
R2636-39	VRE0034E273	M.RESISTOR CH 1/10W 27K	4	
R2642,43	VRE0034E273	M.RESISTOR CH 1/10W 27K	2	
R2646,47	VRE0034E273	M.RESISTOR CH 1/10W 27K	2	
R2648	ERJ6GEYJ101	M.RESISTOR CH1/10W 100	1	
R2652-54	VRE0034E561	M.RESISTOR CH 1/10W 560	3	
R2655-57	VRE0034E564	M.RESISTOR CH 1/10W 560K	3	
R2658	VRE0034E333	M.RESISTOR CH 1/10W 33K	1	
R2659	VRE0034E564	M.RESISTOR CH 1/10W 560K	1	
R2660	VRE0034E333	M.RESISTOR CH 1/10W 33K	1	
R2661,62	VRE0034E154	M.RESISTOR CH 1/10W 150K	2	
R2663,64	VRE0034E224	M.RESISTOR CH 1/10W 220K	2	
R2665	ERJ6GEYJ272	M.RESISTOR CH1/10W 2.7K	1	
R2666	ERJ6GEYJ224	M.RESISTOR CH1/10W 220K	1	
R2667	ERJ6GEYJ272	M.RESISTOR CH1/10W 2.7K	1	
R2668,69	VRE0034E224	M.RESISTOR CH 1/10W 220K	2	
R2670	ERJ6GEYJ272	M.RESISTOR CH1/10W 2.7K	1	
R2671	ERJ6GEYJ224	M.RESISTOR CH1/10W 220K	1	
R2672	ERJ6GEYJ272	M.RESISTOR CH1/10W 2.7K	1	
R2673,74	ERJ6GEYJ331	M.RESISTOR CH1/10W 330	2	
R2675	ERJ6GEYJ103	M.RESISTOR CH1/10W 10K	1	
R2676,77	ERJ6GEYJ223	M.RESISTOR CH1/10W 22K	2	
R2678-81	VRE0034E103	M.RESISTOR CH 1/10W 10K	4	
R2682,83	ERJ6GEYJ823	M.RESISTOR CH1/10W 82K	2	
R2685	VRE0034E394	M.RESISTOR CH 1/10W 390K	1	
R2687	VRE0034E394	M.RESISTOR CH 1/10W 390K	1	
R2688,89	VRE0034E153	M.RESISTOR CH 1/10W 15K	2	
R2690,91	VRE0034E103	M.RESISTOR CH 1/10W 10K	2	

Ref.No.	Part No.	Part Name & Description	Pcs	Remarks
R2694-99	VRE0034E153	M.RESISTOR CH 1/10W 15K	6	
R2708,09	VRE0034E223	M.RESISTOR CH 1/10W 22K	2	
R2710,11	VRE0034E303	M.RESISTOR CH 1/10W 30K	2	
R2712,13	VRE0034E123	M.RESISTOR CH 1/10W 12K	2	
R2714,15	VRE0034E273	M.RESISTOR CH 1/10W 27K	2	
R2716,17	VRE0034E472	M.RESISTOR CH 1/10W 4.7K	2	
R2718-23	VRE0034E912	M.RESISTOR CH 1/10W 9.1K	6	
R2724-47	VRE0034E273	M.RESISTOR CH 1/10W 27K	24	
R2748	ERJ6GEYJ272	M.RESISTOR CH1/10W 2.7K	1	
R2749	ERJ6GEYJ154	M.RESISTOR CH1/10W 150K	1	
R2750	ERJ6GEYJ272	M.RESISTOR CH1/10W 2.7K	1	
R2751-56	VRE0034E273	M.RESISTOR CH 1/10W 27K	6	
R2757	ERJ6GEYJ272	M.RESISTOR CH1/10W 2.7K	1	
R2758	ERJ6GEYJ154	M.RESISTOR CH1/10W 150K	1	
R2759	ERJ6GEYJ272	M.RESISTOR CH1/10W 2.7K	1	
R2767,68	VRE0034E123	M.RESISTOR CH 1/10W 12K	2	
R2769,70	VRE0034E103	M.RESISTOR CH 1/10W 10K	2	
R2771,72	VRE0034E473	M.RESISTOR CH 1/10W 47K	2	
R2773,74	VRE0034E562	M.RESISTOR CH 1/10W 5.6K	2	
R2775-78	VRE0034E243	M.RESISTOR CH 1/10W 24K	4	
R2779,80	VRE0034E302	M.RESISTOR CH 1/10W 3K	2	
R2783-86	VRE0034E273	M.RESISTOR CH 1/10W 27K	4	
R2787,88	VRE0034E102	M.RESISTOR CH 1/10W 1K	2	
R2789,90	VRE0034E104	M.RESISTOR CH 1/10W 100K	2	
R2791,92	VRE0034E272	M.RESISTOR CH 1/10W 2.7K	2	
R2793,94	VRE0034E562	M.RESISTOR CH 1/10W 5.6K	2	
R2795,96	VRE0034E472	M.RESISTOR CH 1/10W 4.7K	2	
R2797,98	VRE0034E392	M.RESISTOR CH 1/10W 3.9K	2	
R2799,00	VRE0034E562	M.RESISTOR CH 1/10W 5.6K	2	
R2801,02	ERJ6GEYJ101	M.RESISTOR CH1/10W 100	2	
R2803-06	VRE0034E273	M.RESISTOR CH 1/10W 27K	4	
R2807	ERJ6GEYJ154	M.RESISTOR CH1/10W 150K	1	
R2808-11	ERJ6GEYJ273	M.RESISTOR CH1/10W 27K	4	
R2812	ERJ6GEYJ154	M.RESISTOR CH1/10W 150K	1	
R2813,14	ERJ6GEYJ273	M.RESISTOR CH1/10W 27K	2	
R2815,16	ERJ6GEYJ331	M.RESISTOR CH1/10W 330	2	
R2818	ERJ6GEYJ273	M.RESISTOR CH1/10W 27K	1	
R2820-24	ERJ6GEYJ273	M.RESISTOR CH1/10W 27K	5	
R2825,26	ERJ6GEYJ331	M.RESISTOR CH1/10W 330	2	
R2827	ERJ6GEYJ103	M.RESISTOR CH1/10W 10K	1	
R2828,29	VRE0034E273	M.RESISTOR CH 1/10W 27K	2	
R2830,31	ERJ6GEYJ103	M.RESISTOR CH1/10W 10K	2	
R2832,33	ERJ6GEYJ473	M.RESISTOR CH1/10W 47K	2	
R2834,35	ERJ6GEYJ103	M.RESISTOR CH1/10W 10K	2	
R2836,37	ERJ6GEYJ473	M.RESISTOR CH1/10W 47K	2	
R2838-41	ERJ6GEYJ103	M.RESISTOR CH1/10W 10K	4	
R2842-45	VRE0034E223	M.RESISTOR CH 1/10W 22K	4	
R2846-49	VRE0034E273	M.RESISTOR CH 1/10W 27K	4	
R2850,51	VRE0034E274	M.RESISTOR CH 1/10W 270K	2	
R2852,53	VRE0034E333	M.RESISTOR CH 1/10W 33K	2	
R2854	ERJ6GEYJ104	M.RESISTOR CH1/10W 100K	1	
R2857	ERJ6GEYJ154	M.RESISTOR CH1/10W 150K	1	
R2858,59	ERJ6GEYJ104	M.RESISTOR CH1/10W 100K	2	
R2860-63	ERJ6GEYJ331	M.RESISTOR CH1/10W 330	4	
R2864-67	VRE0034E223	M.RESISTOR CH 1/10W 22K	4	
R2868,69	VRE0034E272	M.RESISTOR CH 1/10W 2.7K	2	
RA2601	EXBLD8103G	COMBI.R-R 10K	1	
RA2602	EXBF9E103J	COMBI.R-R 10K	1	
RA2603	EXBF8E103J	COMBI.R-R 10K	1	
RA2604	VCR0202	RESISTOR ARRAY	1	
SW2601	VSS0207	SWITCH	1	
TP2601-07	VJR0646	TEST POINT	7	
TP2609-33	VJR0646	TEST POINT	25	
TPG2601,02	VJR0646	TEST POINT	2	
TPG2604	VJR0646	TEST POINT	1	

Ref.No.	Part No.	Part Name & Description	Pcs	Remarks
VR2601,02	VRV0109B502	V.RESISTOR 5K	2	
VR2603,04	VRV0109B203	V.RESISTOR 20K	2	
VR2605-10	VRV0064B203	V.RESISTOR 20K	6	
VR2611,12	VRV0064B103	V.RESISTOR 10K	2	
VR2613,14	VRV0109B102	V.RESISTOR 1K	2	
VR2615,16	VRV0109B202	V.RESISTOR 2K	2	
VR2617,18	VRV0064B503	V.RESISTOR 50K	2	
VR2619-22	VRV0109B103	V.RESISTOR 10K	4	
X2601	VSX0150	CRYSTAL OSCILLATOR	1	
		MISCELLANEOUS		
	VGQ0291	P.C.BOARD NAME PLATE	1	
	VML2143	CARD PULLER	1	
	VML2144	CARD PULLER	1	
	VXA4420	P.C.BOARD SHIELD PLATE	1	
	XNG26E	NUT	4	
	XTV3+6FFR	SCREW	5	
	XYN26+C12	SCREW	4	
	VJP1435	CONNECTOR (MALE)	1	

Ref.No.	Part No.	Part Name & Description	Pcs	Remarks

S5 SERVO VEP82067D
S5 SUB VEP82085B

Ref.No.	Part No.	Part Name & Description	Pcs	Remarks
	VEP82067D	P.C.BOARD W/COMPONENT		
		S5 SERVO		
	VEP82085B	P.C.BOARD W/COMPONENT		FOR VEP82067D
		S5 SUB		
		CAPACITORS		
C2014	ECQB1H103JF	P.CAPACITOR 50V 0.01U	1	
C2018,19	ECA1HXLV010	E.CAPACITOR 50V 1U	2	
C2020	ECA1EXLV330	E.CAPACITOR 25V 33U	1	
C2021	ECUM1H103KBN	C.CAPACITOR CH 50V 0.01U	1	
C2023,24	ECA1CXLV470	E.CAPACITOR 16V 47U	2	
C2025	ECUM1H103KBN	C.CAPACITOR CH 50V 0.01U	1	
C2026	ECA1EXLV220	E.CAPACITOR 25V 22U	1	
C2027	ECUM1H103KBN	C.CAPACITOR CH 50V 0.01U	1	
C2028	ECA1HXLV2R2	E.CAPACITOR 50V 2.2U	1	
C2029	ECA1CXLV470	E.CAPACITOR 16V 47U	1	
C2034,35	ECUM1H103KBN	C.CAPACITOR CH 50V 0.01U	2	
C2036,37	ECUM1H300JCN	C.CAPACITOR CH 50V 30P	2	
C2038	ECUM1H271JCN	C.CAPACITOR CH 50V 270P	1	
C2039	ECUM1H103KBN	C.CAPACITOR CH 50V 0.01U	1	
C2040	ECUM1H271JCN	C.CAPACITOR CH 50V 270P	1	
C2041	ECUM1H103KBN	C.CAPACITOR CH 50V 0.01U	1	
C2042,43	ECA1EXLV330	E.CAPACITOR 25V 33U	2	
C2044	ECUM1H103KBN	C.CAPACITOR CH 50V 0.01U	1	
C2045,46	ECA1EXLV330	E.CAPACITOR 25V 33U	2	
C2047,48	ECUM1H103KBN	C.CAPACITOR CH 50V 0.01U	2	
C2049	ECUM1H152JN	C.CAPACITOR CH 50V 1500P	1	
C2051	ECUM1H152JN	C.CAPACITOR CH 50V 1500P	1	
C2052	ECUM1H151JCN	C.CAPACITOR CH 50V 150P	1	
C2054	ECQB1H103JF	P.CAPACITOR 50V 0.01U	1	
C2058,59	ECA1HXLV010	E.CAPACITOR 50V 1U	2	
C2060	ECA1EXLV330	E.CAPACITOR 25V 33U	1	
C2061	ECUM1H103KBN	C.CAPACITOR CH 50V 0.01U	1	
C2063,64	ECA1CXLV470	E.CAPACITOR 16V 47U	2	
C2065	ECUM1H103KBN	C.CAPACITOR CH 50V 0.01U	1	
C2066,67	ECUM1H560JCN	C.CAPACITOR CH 50V 56P	2	
C2068	ECA1EXLV220	E.CAPACITOR 25V 22U	1	
C2069	ECUM1H103KBN	C.CAPACITOR CH 50V 0.01U	1	
C2070	ECUM1H273KBN	C.CAPACITOR CH 50V 0.027U	1	
C2073	ECUM1H562KBN	C.CAPACITOR CH 50V 5600P	1	
C2074	ECQB1H153JF	P.CAPACITOR 50V 0.015U	1	
C2076	ECQB1H333JF	P.CAPACITOR 50V 0.033U	1	
C2079	ECUM1H562KBN	C.CAPACITOR CH 50V 5600P	1	
C2080	ECUM1H103KBN	C.CAPACITOR CH 50V 0.01U	1	
C2081	ECA1CXLV470	E.CAPACITOR 16V 47U	1	
C2082	ECUM1H103KBN	C.CAPACITOR CH 50V 0.01U	1	
C2083	ECA1CXLV470	E.CAPACITOR 16V 47U	1	
C2084	ECUM1H103KBN	C.CAPACITOR CH 50V 0.01U	1	
C2085	ECA1CXLV470	E.CAPACITOR 16V 47U	1	
C2086	ECUM1H103KBN	C.CAPACITOR CH 50V 0.01U	1	
C2087	ECA1VXLV470	E.CAPACITOR 35V 47U	1	
C2088	ECUM1H103KBN	C.CAPACITOR CH 50V 0.01U	1	
C2089	ECA1CXLV470	E.CAPACITOR 16V 47U	1	
C2090	ECUM1H103KBN	C.CAPACITOR CH 50V 0.01U	1	
C2091	ECA1CXLV470	E.CAPACITOR 16V 47U	1	
C2096	ECA1CXLV470	E.CAPACITOR 16V 47U	1	
C2097	ECA1EXLV101X	E.CAPACITOR 25V 100U	1	
C2098	ECA1CXLV470	E.CAPACITOR 16V 47U	1	
C2099	ECQB1H561JF	P.CAPACITOR 50V 560P	1	
C2101	ECUM1H330JCN	C.CAPACITOR CH 50V 33P	1	
C2102	ECUM1H333KBN	C.CAPACITOR CH 50V 0.033U	1	
C2103	ECUM1H090DCN	C.CAPACITOR CH 50V 9P	1	
C2104	ECA1CXNV100	E.CAPACITOR 16V 10U	1	
C2105	ECQB1H332JF	P.CAPACITOR 50V 3300P	1	
C2106	ECA1CXNV100	E.CAPACITOR 16V 10U	1	
C2107	ECUM1H103KBN	C.CAPACITOR CH 50V 0.01U	1	
C2108,09	ECA1CXLV470	E.CAPACITOR 16V 47U	2	
C2110	ECUM1H103KBN	C.CAPACITOR CH 50V 0.01U	1	
C2111-20	ECUM1E104ZFN	C.CAPACITOR 25V 0.1U	10	
C2121	ECA1CXLV470	E.CAPACITOR 16V 47U	1	

Ref.No.	Part No.	Part Name & Description	Pcs	Remarks
C2130	ECUM1H391JCN	C.CAPACITOR CH 50V 390P	1	
C2131	ECUM1H103KBN	C.CAPACITOR CH 50V 0.01U	1	
C2132	ECUM1H102JCN	C.CAPACITOR CH 50V 1000P	1	
C2133	ECUM1E104ZFN	C.CAPACITOR 25V 0.1U	1	
C2134	ECUM1H101JCN	C.CAPACITOR CH 50V 100P	1	
C2135	ECUM1H102JCN	C.CAPACITOR CH 50V 1000P	1	
C2136	ECUM1H101JCN	C.CAPACITOR CH 50V 100P	1	
C2137	ECUM1E104ZFN	C.CAPACITOR 25V 0.1U	1	
C2138	ECUM1H151JCN	C.CAPACITOR CH 50V 150P	1	
C2142	ECUM1H103KBN	C.CAPACITOR CH 50V 0.01U	1	
C2143	ECA1EXLV101X	E.CAPACITOR 25V 100U	1	
C2144	ECA1EXLV220	E.CAPACITOR 25V 22U	1	
C2145	ECUM1H222JN	C.CAPACITOR CH 50V 2200P	1	
C2146	ECUM1H102JCN	C.CAPACITOR CH 50V 1000P	1	
C2147	ECUM1H103ZFN	C.CAPACITOR CH 50V 0.01U	1	
C2148	ECA1CXLV470	E.CAPACITOR 16V 47U	1	
C2150,51	ECUM1E104ZFN	C.CAPACITOR 25V 0.1U	2	
C2154	ECUM1E104ZFN	C.CAPACITOR 25V 0.1U	1	
C2160	ECA1HXSR47	E.CAPACITOR 50V 0.47U	1	
C2204	ECUM1H220JCN	C.CAPACITOR CH 50V 22P	1	
C2205	ECA1HXLV010	E.CAPACITOR 50V 1U	1	
C2206	ECUM1E104ZFN	C.CAPACITOR 25V 0.1U	1	
C2207	ECUM1H103ZFN	C.CAPACITOR CH 50V 0.01U	1	
C2208,09	ECUM1E104ZFN	C.CAPACITOR 25V 0.1U	2	
C2215	ECUM1H151JCN	C.CAPACITOR CH 50V 150P	1	
C2216	ECA1EXLV220	E.CAPACITOR 25V 22U	1	
C2219	ECUM1E104ZFN	C.CAPACITOR 25V 0.1U	1	
C2220-22	ECA1HXLV100	E.CAPACITOR 50V 10U	3	
C2223	ECA1CXLV470	E.CAPACITOR 16V 47U	1	
C2224,25	ECA1HXLV100	E.CAPACITOR 50V 10U	2	
C2231	ECQB1H394JF	P.CAPACITOR 50V 0.39U	1	
C2232-38	ECUM1H562KBN	C.CAPACITOR CH 50V 5600P	7	
C2241	ECUM1H330JCN	C.CAPACITOR CH 50V 33P	1	
C2242	ECUM1H101JCN	C.CAPACITOR CH 50V 100P	1	
C2243	ECUM1H103KBN	C.CAPACITOR CH 50V 0.01U	1	
C2244,45	ECA1EXLV330	E.CAPACITOR 25V 33U	2	
C2246	ECUM1H103KBN	C.CAPACITOR CH 50V 0.01U	1	
C2247	ECUM1H101JCN	C.CAPACITOR CH 50V 100P	1	
C2248	ECUM1H330JCN	C.CAPACITOR CH 50V 33P	1	
C2249	ECUM1H103KBN	C.CAPACITOR CH 50V 0.01U	1	
C2250,51	ECA1EXLV330	E.CAPACITOR 25V 33U	2	
C2252	ECUM1H101JCN	C.CAPACITOR CH 50V 100P	1	
C2253	ECUM1H330JCN	C.CAPACITOR CH 50V 33P	1	
C2254	ECUM1H103KBN	C.CAPACITOR CH 50V 0.01U	1	
C2255,56	ECA1EXLV330	E.CAPACITOR 25V 33U	2	
C2257	ECUM1H101JCN	C.CAPACITOR CH 50V 100P	1	
C2258	ECUM1H330JCN	C.CAPACITOR CH 50V 33P	1	
C2259	ECUM1H103KBN	C.CAPACITOR CH 50V 0.01U	1	
C2260,61	ECA1EXLV330	E.CAPACITOR 25V 33U	2	
C2263	ECUM1H562KBN	C.CAPACITOR CH 50V 5600P	1	
C2264-68	ECUM1H103KBN	C.CAPACITOR CH 50V 0.01U	5	
C2270	ECUM1H103KBN	C.CAPACITOR CH 50V 0.01U	1	
C2271	ECA1EXLV101X	E.CAPACITOR 25V 100U	1	
C2272-77	ECUM1H103KBN	C.CAPACITOR CH 50V 0.01U	6	
C2278	ECA1EXLV220	E.CAPACITOR 25V 22U	1	
C2347,48	ECUM1H103ZFN	C.CAPACITOR CH 50V 0.01U	2	
C21602	ECA1HXSR47	E.CAPACITOR 50V 0.47U	1	
D2001-04	MA153	DIODE	4	
D2006	MA153	DIODE	1	
D2007	MA151K	DIODE	1	
D2010,11	MA151K	DIODE	2	
D2012	MA153	DIODE	1	
D2014	MA151K	DIODE	1	
D2015-18	MA153	DIODE	4	
D2019	MA151K	DIODE	1	
D2201-08	MA153	DIODE	8	
D2209	MA151WK	DIODE	1	
D2211-20	MA153	DIODE	10	
IC2001	MN67512VAVF	IC	1	

S5

Ref.No.	Part No.	Part Name & Description	Pcs	Remarks
IC2002	MN67512VMCZ	IC	1	
IC2003	MC14556BF	IC	1	
IC2004	MC14539BF	IC	1	
IC2005	UPC78N12H	IC	1	
IC2006	MC14049UBF	IC	1	
IC2011	NJM2904M	IC	1	
IC2012,13	NJM4558M	IC	2	
IC2014	NJM2904M	IC	1	
IC2015	NJM2903M	IC	1	
IC2016	MC14013BF	IC	1	
IC2018	MN4030BS	IC	1	
IC2021	MC14027BF	IC	1	
IC2022,23	NJM2904M	IC	2	
IC2024	MC74HC14AF	IC	1	
IC2025	MC74HC157AF	IC	1	
IC2026	MC74HC74AF	IC	1	
IC2027	MC74HC175F	IC	1	
IC2028	MC74HC00AF	IC	1	
IC2029-31	MC74HC161AF	IC	3	
IC2033	NJM2904M	IC	1	
IC2035	NJM2904M	IC	1	
IC2036	MC74HC14AF	IC	1	
IC2037-39	MC14050BF	IC	3	
IC2040	MC74HC157AF	IC	1	
IC2041	NJM4558M	IC	1	
IC2042	TL082CPS	IC	1	
IC2043	BA6110	IC	1	
IC2044	NJM4558M	IC	1	
IC2045	MC14538BF	IC	1	
IC2046	MC74HC14AF	IC	1	
IC2047	AN78L09	IC	1	
IC2050	NJM2903M	IC	1	
IC2051	NJM2904M	IC	1	
IC2053	MC14526BF	IC	1	
IC2054	MSM5210RS	IC	1	
IC2055	NJM2904M	IC	1	
IC2056,57	MC14053BF	IC	2	
IC2058	AN79L09	IC	1	
IC2060	NJM2903M	IC	1	
IC2061	NJM2904M	IC	1	
IC2062	MC74HC08AF	IC	1	
IC2063	MC14053BF	IC	1	
IC2064	MC74HC86F	IC	1	
IC2100	MC14053BF	IC	1	
IC2201	MN188166VHI5	IC	1	
IC2202	VSI1155J	IC	1	
IC2203	DAC1220LCN	IC	1	
IC2204	TL7705CPSB	IC	1	
IC2205	MC14520BF	IC	1	
IC2206	NJM2904M	IC	1	
IC2207	NJM2902M	IC	1	
IC2208	MC14053BF	IC	1	
IC2209	NJM2904M	IC	1	
IC2210	TL084CNS	IC	1	
IC2211,12	MC14066BF	IC	2	
IC2213	MC14013BF	IC	1	
IC2214	MC14053BF	IC	1	
IC2216	MC14081BF	IC	1	
IC2217	NJM2902M	IC	1	
IC2218,19	MSM5210RS	IC	2	
IC2220	MC74HC08AF	IC	1	
IC2221	MC14053BF	IC	1	
IC2222	NJM2903M	IC	1	
IC2231	MC74HC237F	IC	1	
IC2232,33	TL084CNS	IC	2	
IC2235	BA6110	IC	1	
IC2236-39	UPC4741G2	IC	4	
IC2240	TL084CNS	IC	1	
IC2241	NJM2901M	IC	1	
IC2242	MC14053BF	IC	1	
IC2243	MC14050BF	IC	1	
IC2245	MC14053BF	IC	1	
ICS2202	VJS2726	CONNECTOR (FEMALE)	1	

Ref.No.	Part No.	Part Name & Description	Pcs	Remarks
L2002	VLQ0128	COIL	1	
L2004	VLQ0128	COIL	1	
L2206	VLQ0128	COIL	1	
P2209,10	VJP3151	CONNECTOR (MALE)	2	
Q2003,04	2SD601-R	TRANSISTOR	2	
Q2006	2SD601-R	TRANSISTOR	1	
Q2007	2SJ43	TRANSISTOR	1	
Q2008	UN2213	TRANSISTOR	1	
Q2010	UN2213	TRANSISTOR	1	
Q2011	2SD601-R	TRANSISTOR	1	
Q2012,13	2SB709-R	TRANSISTOR	2	
Q2014,15	2SD601-R	TRANSISTOR	2	
Q2016	2SK374-R	TRANSISTOR	1	
Q2017	UN2213	TRANSISTOR	1	
Q2018	UN2113	TRANSISTOR	1	
Q2019	2SK374-R	TRANSISTOR	1	
Q2020	UN2213	TRANSISTOR	1	
Q2021	UN2113	TRANSISTOR	1	
Q2022	2SB709-R	TRANSISTOR	1	
Q2023	UN2215	TRANSISTOR	1	
Q2026	UN2213	TRANSISTOR	1	
Q2027	UN2113	TRANSISTOR	1	
Q2028	UN2213	TRANSISTOR	1	
Q2029	UN2113	TRANSISTOR	1	
Q2201	2SD601-R	TRANSISTOR	1	
Q2202	UN2213	TRANSISTOR	1	
		RESISTORS		
R2001	ERJ6GEYJ824	M.RESISTOR CH1/10W 820K	1	
R2012	ERJ6GEYJ102	M.RESISTOR CH1/10W 1K	1	
R2013-15	ERJ6GEYJ103	M.RESISTOR CH1/10W 10K	3	
R2023	ERJ6GEYG153	M.RESISTOR CH1/10W 15K	1	
R2024,25	ERJ6GEYJ103	M.RESISTOR CH1/10W 10K	2	
R2026	ERJ6GEYJ474	M.RESISTOR CH1/10W 470K	1	
R2027	ERJ6GEYG153	M.RESISTOR CH1/10W 15K	1	
R2028,29	ERJ6GEYJ103	M.RESISTOR CH1/10W 10K	2	
R2030	ERJ6GEYJ474	M.RESISTOR CH1/10W 470K	1	
R2031-34	ERJ6GEYJ473	M.RESISTOR CH1/10W 47K	4	
R2035-37	ERJ6GEYJ272	M.RESISTOR CH1/10W 2.7K	3	
R2038	ERJ6GEYJ224	M.RESISTOR CH1/10W 220K	1	
R2039	ERJ6GEYJ272	M.RESISTOR CH1/10W 2.7K	1	
R2040	ERJ6GEYJ224	M.RESISTOR CH1/10W 220K	1	
R2041	ERJ6GEYF333	M.RESISTOR CH1/10W 33K	1	
R2043	ERJ6GEYJ104	M.RESISTOR CH1/10W 100K	1	
R2044	ERJ6GEYJ102	M.RESISTOR CH1/10W 1K	1	
R2045,46	ERJ6GEYJ103	M.RESISTOR CH1/10W 10K	2	
R2047	ERJ6GEYJ563	M.RESISTOR CH1/10W 56K	1	
R2050	ERJ6GEYJ563	M.RESISTOR CH1/10W 56K	1	
R2051	ERJ6GEYJ750	M.RESISTOR CH1/10W 75	1	
R2054-56	ERJ6GEYJ563	M.RESISTOR CH1/10W 56K	3	
R2057	ERJ6GEYJ332	M.RESISTOR CH1/10W 3.3K	1	
R2058	ERJ6GEYJ223	M.RESISTOR CH1/10W 22K	1	
R2059	ERJ6GEYJ183	M.RESISTOR CH1/10W 18K	1	
R2060	ERJ6GEYJ102	M.RESISTOR CH1/10W 1K	1	
R2061	ERJ6GEYJ562	M.RESISTOR CH1/10W 5.6K	1	
R2062	ERJ6GEYJ821	M.RESISTOR CH1/10W 820	1	
R2064,65	ERJ6GEYJ562	M.RESISTOR CH1/10W 5.6K	2	
R2066	ERJ6GEYJ563	M.RESISTOR CH1/10W 56K	1	
R2067	ERJ6GEYJ562	M.RESISTOR CH1/10W 5.6K	1	
R2068	ERJ6GEYJ563	M.RESISTOR CH1/10W 56K	1	
R2069	ERJ6GEYJ273	M.RESISTOR CH1/10W 27K	1	
R2070	ERJ6GEYJ103	M.RESISTOR CH1/10W 10K	1	
R2071	ERJ6GEYJ684	M.RESISTOR CH1/10W 680K	1	
R2072,73	ERJ6GEYJ103	M.RESISTOR CH1/10W 10K	2	
R2074	ERJ6GEYJ184	M.RESISTOR CH1/10W 180K	1	
R2075	ERJ6GEYJ474	M.RESISTOR CH1/10W 470K	1	

5

Ref.No.	Part No.	Part Name & Description	Pcs	Remarks
R2076	VRE0034E104	M.RESISTOR CH 1/10W 100K	1	
R2077	VRE0034E123	M.RESISTOR CH 1/10W 12K	1	
R2078	VRE0034E152	M.RESISTOR CH 1/10W 1.5K	1	
R2079	VRE0034E123	M.RESISTOR CH 1/10W 12K	1	
R2080	ERJ6GEYJ273	M.RESISTOR CH1/10W 27K	1	
R2081,82	VRE0034E103	M.RESISTOR CH 1/10W 10K	2	
R2083	VRE0034E273	M.RESISTOR CH 1/10W 27K	1	
R2084	ERJ6GEYJ103	M.RESISTOR CH1/10W 10K	1	
R2085,86	ERJ6GEYJ473	M.RESISTOR CH1/10W 47K	2	
R2087	ERJ6GEYJ273	M.RESISTOR CH1/10W 27K	1	
R2088,89	ERJ6GEYG151	M.RESISTOR CH1/10W 150	2	
R2090-93	ERJ6GEYJ103	M.RESISTOR CH1/10W 10K	4	
R2095	ERJ6GEYJ331	M.RESISTOR CH1/10W 330	1	
R2096	ERJ6GEYF333	M.RESISTOR CH1/10W 33K	1	
R2100	ERJ6GEYJ334	M.RESISTOR CH1/10W 330K	1	
R2101	ERJ6GEYJ100	M.RESISTOR CH1/10W 10	1	
R2102	ERJ6GEYJ103	M.RESISTOR CH1/10W 10K	1	
R2104	ERJ6GEYF472	M.RESISTOR CH1/10W 4.7K	1	
R2110	ERJ6GEYJ272	M.RESISTOR CH1/10W 2.7K	1	
R2111	ERJ6GEYJ274	M.RESISTOR CH1/10W 270K	1	
R2112	ERJ6GEYJ103	M.RESISTOR CH1/10W 10K	1	
R2113	ERJ6GEYJ104	M.RESISTOR CH1/10W 100K	1	
R2114	ERJ6GEYJ103	M.RESISTOR CH1/10W 10K	1	
R2115	ERJ6GEYJ394	M.RESISTOR CH1/10W 390K	1	
R2116	ERJ6GEYJ103	M.RESISTOR CH1/10W 10K	1	
R2117	ERJ6GEYJ155	M.RESISTOR CH1/10W 1.5M	1	
R2118	ERJ6GEYJ103	M.RESISTOR CH1/10W 10K	1	
R2119	ERJ6GEYJ272	M.RESISTOR CH1/10W 2.7K	1	
R2120	ERJ6GEYJ393	M.RESISTOR CH1/10W 39K	1	
R2121	ERJ6GEYJ273	M.RESISTOR CH1/10W 27K	1	
R2122	ERJ6GEYJ334	M.RESISTOR CH1/10W 330K	1	
R2125-28	ERJ6GEYJ102	M.RESISTOR CH1/10W 1K	4	
R2129-31	ERJ6GEYJ221	M.RESISTOR CH1/10W 220	3	
R2132	ERJ6GEYJ105	M.RESISTOR CH1/10W 1M	1	
R2133	ERJ6GEYJ103	M.RESISTOR CH1/10W 10K	1	
R2134	ERJ6GEYJ105	M.RESISTOR CH1/10W 1M	1	
R2135	ERJ6GEYJ103	M.RESISTOR CH1/10W 10K	1	
R2136	ERJ6GEYJ104	M.RESISTOR CH1/10W 100K	1	
R2137	ERJ6GEYJ563	M.RESISTOR CH1/10W 56K	1	
R2138,39	ERJ6GEYJ103	M.RESISTOR CH1/10W 10K	2	
R2141-63	ERJ6GEYJ103	M.RESISTOR CH1/10W 10K	23	
R2165-72	ERJ6GEYJ103	M.RESISTOR CH1/10W 10K	8	
R2176	ERJ6GEYJ103	M.RESISTOR CH1/10W 10K	1	
R2178,79	ERJ6GEYJ103	M.RESISTOR CH1/10W 10K	2	
R2180	ERJ6GEYJ105	M.RESISTOR CH1/10W 1M	1	
R2181-83	ERJ6GEYJ562	M.RESISTOR CH1/10W 5.6K	3	
R2184,85	ERJ6GEYJ103	M.RESISTOR CH1/10W 10K	2	
R2186	ERJ6GEYJ562	M.RESISTOR CH1/10W 5.6K	1	
R2187,88	ERJ6GEYJ103	M.RESISTOR CH1/10W 10K	2	
R2189	ERJ6GEYF333	M.RESISTOR CH1/10W 33K	1	
R2190	ERJ6GEYJ123	M.RESISTOR CH1/10W 12K	1	
R2191	ERJ6GEYJ562	M.RESISTOR CH1/10W 5.6K	1	
R2192-95	ERJ6GEYJ103	M.RESISTOR CH1/10W 10K	4	
R2196	ERJ6GEYJ101	M.RESISTOR CH1/10W 100	1	
R2197	ERDS2TJ103	C.RESISTOR 1/4W 10K	1	
R2201	ERJ6GEYJ473	M.RESISTOR CH1/10W 47K	1	
R2202	ERJ6GEYJ103	M.RESISTOR CH1/10W 10K	1	
R2203-05	ERJ6GEYJ561	M.RESISTOR CH1/10W 560	3	
R2206-08	ERJ6GEYJ473	M.RESISTOR CH1/10W 47K	3	
R2209,10	VRE0034E103	M.RESISTOR CH 1/10W 10K	2	
R2211,12	ERJ6GEYJ103	M.RESISTOR CH1/10W 10K	2	
R2213	ERJ6GEYJ272	M.RESISTOR CH1/10W 2.7K	1	
R2214	ERJ6GEYJ392	M.RESISTOR CH1/10W 3.9K	1	
R2215	ERJ6GEYJ272	M.RESISTOR CH1/10W 2.7K	1	
R2216	ERJ6GEYJ100	M.RESISTOR CH1/10W 10	1	
R2217,18	ERJ6GEYJ103	M.RESISTOR CH1/10W 10K	2	
R2219	ERJ6GEYJ105	M.RESISTOR CH1/10W 1M	1	
R2236	ERJ6GEYJ103	M.RESISTOR CH1/10W 10K	1	
R2237	VRE0034E102	M.RESISTOR CH 1/10W 1K	1	
R2238	VRE0034E302	M.RESISTOR CH 1/10W 3K	1	
R2239-41	VRE0034E102	M.RESISTOR CH 1/10W 1K	3	
R2247	ERJ6GEYJ100	M.RESISTOR CH1/10W 10	1	
R2251	ERJ6GEYJ103	M.RESISTOR CH1/10W 10K	1	
R2252	ERJ6GEYJ563	M.RESISTOR CH1/10W 56K	1	
R2260	ERJ6GEYJ561	M.RESISTOR CH1/10W 560	1	

Ref.No.	Part No.	Part Name & Description	Pcs	Remarks
R2261,62	VRE0034E683	M.RESISTOR CH 1/10W 63K	2	
R2263,64	VRE0034E103	M.RESISTOR CH 1/10W 10K	2	
R2265,66	ERJ6GEYJ103	M.RESISTOR CH1/10W 10K	2	
R2267	ERJ6GEYJ154	M.RESISTOR CH1/10W 150K	1	
R2268	ERJ6GEYJ393	M.RESISTOR CH1/10W 39K	1	
R2269	ERJ6GEYF333	M.RESISTOR CH1/10W 33K	1	
R2270	ERJ6GEYF124	M.RESISTOR CH1/10W 120K	1	
R2271	ERJ6GEYJ104	M.RESISTOR CH1/10W 100K	1	
R2272,73	VRE0034E103	M.RESISTOR CH 1/10W 10K	2	
R2278	ERJ6GEYJ103	M.RESISTOR CH1/10W 10K	1	
R2279	ERJ6GEYJ223	M.RESISTOR CH1/10W 22K	1	
R2280	ERJ6GEYJ273	M.RESISTOR CH1/10W 27K	1	
R2281	ERJ6GEYJ223	M.RESISTOR CH1/10W 22K	1	
R2282	ERJ6GEYJ224	M.RESISTOR CH1/10W 220K	1	
R2283	ERJ6GEYJ394	M.RESISTOR CH1/10W 390K	1	
R2284,85	ERJ6GEYJ473	M.RESISTOR CH1/10W 47K	2	
R2286	ERJ6GEYJ152	M.RESISTOR CH1/10W 1.5K	1	
R2287	ERJ6GEYF333	M.RESISTOR CH1/10W 33K	1	
R2288	ERJ6GEYJ223	M.RESISTOR CH1/10W 22K	1	
R2289	ERJ6GEYJ272	M.RESISTOR CH1/10W 2.7K	1	
R2290	ERJ6GEYF333	M.RESISTOR CH1/10W 33K	1	
R2291	ERJ6GEYJ184	M.RESISTOR CH1/10W 180K	1	
R2292	ERJ6GEYJ103	M.RESISTOR CH1/10W 10K	1	
R2293	ERJ6GEYJ223	M.RESISTOR CH1/10W 22K	1	
R2294	ERJ6GEYJ273	M.RESISTOR CH1/10W 27K	1	
R2295	ERJ6GEYJ223	M.RESISTOR CH1/10W 22K	1	
R2296	ERJ6GEYJ224	M.RESISTOR CH1/10W 220K	1	
R2297	ERJ6GEYJ394	M.RESISTOR CH1/10W 390K	1	
R2298,99	ERJ6GEYJ473	M.RESISTOR CH1/10W 47K	2	
R2300	ERJ6GEYJ152	M.RESISTOR CH1/10W 1.5K	1	
R2301	ERJ6GEYF333	M.RESISTOR CH1/10W 33K	1	
R2302	ERJ6GEYJ223	M.RESISTOR CH1/10W 22K	1	
R2303	ERJ6GEYJ272	M.RESISTOR CH1/10W 2.7K	1	
R2304	ERJ6GEYF333	M.RESISTOR CH1/10W 33K	1	
R2305	ERJ6GEYJ184	M.RESISTOR CH1/10W 180K	1	
R2306	ERJ6GEYJ103	M.RESISTOR CH1/10W 10K	1	
R2307	ERJ6GEYJ223	M.RESISTOR CH1/10W 22K	1	
R2308	ERJ6GEYJ273	M.RESISTOR CH1/10W 27K	1	
R2309	ERJ6GEYJ223	M.RESISTOR CH1/10W 22K	1	
R2310	ERJ6GEYJ224	M.RESISTOR CH1/10W 220K	1	
R2311	ERJ6GEYJ394	M.RESISTOR CH1/10W 390K	1	
R2312,13	ERJ6GEYJ473	M.RESISTOR CH1/10W 47K	2	
R2314	ERJ6GEYJ152	M.RESISTOR CH1/10W 1.5K	1	
R2315	ERJ6GEYF333	M.RESISTOR CH1/10W 33K	1	
R2316	ERJ6GEYJ223	M.RESISTOR CH1/10W 22K	1	
R2317	ERJ6GEYJ272	M.RESISTOR CH1/10W 2.7K	1	
R2318	ERJ6GEYF333	M.RESISTOR CH1/10W 33K	1	
R2319	ERJ6GEYJ184	M.RESISTOR CH1/10W 180K	1	
R2320	ERJ6GEYJ103	M.RESISTOR CH1/10W 10K	1	
R2321	ERJ6GEYJ273	M.RESISTOR CH1/10W 27K	1	
R2322,23	ERJ6GEYJ223	M.RESISTOR CH1/10W 22K	2	
R2324	ERJ6GEYJ224	M.RESISTOR CH1/10W 220K	1	
R2325	ERJ6GEYJ394	M.RESISTOR CH1/10W 390K	1	
R2326,27	ERJ6GEYJ473	M.RESISTOR CH1/10W 47K	2	
R2328	ERJ6GEYJ152	M.RESISTOR CH1/10W 1.5K	1	
R2329	ERJ6GEYF333	M.RESISTOR CH1/10W 33K	1	
R2330	ERJ6GEYJ223	M.RESISTOR CH1/10W 22K	1	
R2331	ERJ6GEYJ272	M.RESISTOR CH1/10W 2.7K	1	
R2332	ERJ6GEYF333	M.RESISTOR CH1/10W 33K	1	
R2333	ERJ6GEYJ184	M.RESISTOR CH1/10W 180K	1	
R2335,36	ERJ6GEYJ473	M.RESISTOR CH1/10W 47K	2	
R2337	ERJ6GEYJ103	M.RESISTOR CH1/10W 10K	1	
R2338	ERJ6GEYJ563	M.RESISTOR CH1/10W 56K	1	
R2339	ERJ6GEYJ561	M.RESISTOR CH1/10W 560	1	
R2340-42	ERJ6GEYJ100	M.RESISTOR CH1/10W 10	3	
R2343	ERJ6GEYJ103	M.RESISTOR CH1/10W 10K	1	
R2344-46	ERJ6GEYJ100	M.RESISTOR CH1/10W 10	3	
R2361	ERJ6GEYJ223	M.RESISTOR CH1/10W 22K	1	
SW2001	VJP2631	CONNECTOR (MALE)	1	
SW2002-04	VSR0032	SWITCH	3	
SW2005	VJS1990	CONNECTOR (FEMALE)	1	

S6

S6 TIME CODE VEP86091F
S6 SUB VEP86133A

Ref.No.	Part No.	Part Name & Description	Pcs	Remarks
TP2001,02	VJR0646	TEST POINT	2	
TP2012	VJR0646	TEST POINT	1	
TP2014	VJR0646	TEST POINT	1	
TP2017	VJR0646	TEST POINT	1	
TP2020	VJR0646	TEST POINT	1	
TP2037	VJR0646	TEST POINT	1	
TP2039-41	VJR0646	TEST POINT	3	
TP2044	VJR0646	TEST POINT	1	
TP2049	VJR0646	TEST POINT	1	
TP2201-26	VJR0646	TEST POINT	26	
TPG2001,02	VJR0646	TEST POINT	2	
TPG2004,05	VJR0646	TEST POINT	2	
VR2001,02	VRV0109B202	V.RESISTOR 2K	2	
VR2006	VRV0109B504	V.RESISTOR 500K	1	
VR2007	VRV0111B204	V.RESISTOR 200K	1	
VR2008	VRV0109B102	V.RESISTOR 1K	1	
VR2009	VRV0109B203	V.RESISTOR 20K	1	
VR2010	VRV0109B502	V.RESISTOR 5K	1	
VR2203	VRV0109B504	V.RESISTOR 500K	1	
X2001	VSX0150	CRYSTAL OSCILLATOR	1	
		MISCELLANEOUS		
	VGQ0291	P.C.BOARD NAME PLATE	1	
	VJS2509	CONNECTOR (FEMALE)	4	
	VML2143	CARD PULLER	1	
	VML2144	CARD PULLER	1	
	VXA4420	P.C.BOARD SHIELD PLATE	1	
	XNG26E	NUT	4	
	XTV3+6FFR	SCREW	5	
	XYN26+C12	SCREW	4	
	VJP2509	CONNECTOR (MALE)	4	
	VEP86091F	P.C.BOARD W/COMPONENT		
		S6 TIME CODE		
	VEP86133A	P.C.BOARD W/COMPONENT		FOR VEP86091F
		S6 SUB		
B1,B2	VSB0017	BATTERY	2	
		CAPACITORS		
C1-C9	ECUM1H104ZFN	C.CAPACITOR CH 50V 0.1U	9	
C10-22	ECUM1H104ZFN	C.CAPACITOR CH 50V 0.1U	13	
C23,24	ECUM1H103ZFN	C.CAPACITOR CH 50V 0.01U	2	
C25	ECUM1H104ZFN	C.CAPACITOR CH 50V 0.1U	1	
C26-40	ECUM1H103ZFN	C.CAPACITOR CH 50V 0.01U	15	
C41	ECUM1H104ZFN	C.CAPACITOR CH 50V 0.1U	1	
C42-53	ECUM1H103ZFN	C.CAPACITOR CH 50V 0.01U	12	
C61-65	ECUM1H103ZFN	C.CAPACITOR CH 50V 0.01U	5	
C66	ECUM1H104ZFN	C.CAPACITOR CH 50V 0.1U	1	
C71-74	ECUM1H103ZFN	C.CAPACITOR CH 50V 0.01U	4	
C76	ECUM1H224ZFM	C.CAPACITOR CH 50V 0.22U	1	
C81,82	ECUM1H330JCN	C.CAPACITOR CH 50V 33P	2	
C83	ECUM1H390JCN	C.CAPACITOR CH 50V 39P	1	
C84	ECUM1H020DCN	C.CAPACITOR CH 50V 2P	1	
C85	ECUM1H330JCN	C.CAPACITOR CH 50V 33P	1	

Ref.No.	Part No.	Part Name & Description	Pcs	Remarks
C86-88	ECUM1H102KBN	C.CAPACITOR CH 50V 1000P	3	
C89	ECA1CXS470	E.CAPACITOR 16V 47U	1	
C90	ECA1HXS010	E.CAPACITOR 50V 1U	1	
C91,92	ECUM1H470JCN	C.CAPACITOR CH 50V 47P	2	
C93,94	ECUM1H150JCN	C.CAPACITOR CH 50V 15P	2	
C95,96	ECUM1H180JCN	C.CAPACITOR CH 50V 18P	2	
C97	ECUM1H470JCN	C.CAPACITOR CH 50V 47P	1	
C99	ECA1VXNV4R7	E.CAPACITOR 35V 4.7U	1	
C100	ECA1VXNV4R7	E.CAPACITOR 35V 4.7U	1	
C101	ECA1CXS100	E.CAPACITOR 16V 10U	1	
C102	ECUM1H120JCN	C.CAPACITOR CH 50V 12P	1	
C103	ECUM1H121JCN	C.CAPACITOR CH 50V 120P	1	
C104	ECUM1H122KBN	C.CAPACITOR CH 50V 1200P	1	
C105-07	ECA1VXNV4R7	E.CAPACITOR 35V 4.7U	3	
C108,09	ECUM1H220JCN	C.CAPACITOR CH 50V 22P	2	
C110	ECUM1H103KBN	C.CAPACITOR CH 50V 0.01U	1	
C111,12	ECUM1H221JCN	C.CAPACITOR CH 50V 220P	2	
C113-16	ECA1CXS100	E.CAPACITOR 16V 10U	4	
C117	ECA1AXS680	E.CAPACITOR 10V 68U	1	
C118	ECUM1H390JCN	C.CAPACITOR CH 50V 39P	1	
C119	ECUM1H560JCN	C.CAPACITOR CH 50V 56P	1	
C120	ECUM1H151JCN	C.CAPACITOR CH 50V 150P	1	
C121	ECUM1H101JCN	C.CAPACITOR CH 50V 100P	1	
C6201,02	ECUM1H103ZFN	C.CAPACITOR CH 50V 0.01U	2	
C6203	ECEV1CV470Q	E.CAPACITOR 16V 47U	1	
C6204-06	ECEV1EV100Q	E.CAPACITOR 25V 10U	3	
C6207	ECUM1H472KBN	C.CAPACITOR CH 50V 4700P	1	
C6208	ECEV1CV470Q	E.CAPACITOR 16V 47U	1	
C6209	ECUM1H472KBN	C.CAPACITOR CH 50V 4700P	1	
C6210	ECEV1HN4R7Q	E.CAPACITOR 50V 4.7U	1	
C6211,12	ECUM1H103ZFN	C.CAPACITOR CH 50V 0.01U	2	
C6214	ECUM1H220JCN	C.CAPACITOR CH 50V 22P	1	
C6215-19	ECUM1H103ZFN	C.CAPACITOR CH 50V 0.01U	5	
C6220	ECUM1H102KBN	C.CAPACITOR CH 50V 1000P	1	
C6221	ECEV1CN100Q	E.CAPACITOR 16V 10U	1	
D1,D2	MA151K	DIODE	2	
D3,D4	HZ3ALL	DIODE	2	
D5,D6	MA153	DIODE	2	
D7	MA151K	DIODE	1	
FL6201	VLF0928	FILTER	1	
IC1	UPD78C10GF	IC	1	
IC2	UPD7503GB26	IC	1	
IC3	VSI1094J	IC	1	
IC4	MN51040VPI	IC	1	
IC5	MN1287BF	IC	1	
IC6	MB8421-90LPF	IC	1	
IC7	MB89363BPF	IC	1	
IC8	HD64180ZRP8	IC	1	
IC9	VSI1096G	IC	1	
IC10	MB8464A80LFF	IC	1	
IC11	MB8421-90LPF	IC	1	
IC12,13	TMPZ84C43AF6	IC	2	
IC14	UPD7210C	IC	1	
IC15	MC74HC573AF	IC	1	
IC16,17	MC74HC138AF	IC	2	
IC18	MC74HC574AF	IC	1	
IC19-21	MC74HC138AF	IC	3	
IC22	MM74HC221AM	IC	1	
IC23	MC74HC4053F	IC	1	
IC24	MC74HC541AF	IC	1	
IC25	MC74HC4040F	IC	1	
IC26	MC74HC4053F	IC	1	
IC27	MC74HC153F	IC	1	
IC28-30	MC34051M	IC	3	
IC31	MC1488M	IC	1	
IC32	MC1489M	IC	1	

Ref.No.	Part No.	Part Name & Description	Pcs	Remarks
IC33	SN75160BN	IC	1	
IC34	SN75161BN	IC	1	
IC35,36	MC74HC4066F	IC	2	
IC37	MC74HC74AF	IC	1	
IC38	MC74HC32AF	IC	1	
IC39	MC74HC4050F	IC	1	
IC40	MC74HC32AF	IC	1	
IC41	MC74HCU04F	IC	1	
IC42,43	MC74HC08AF	IC	2	
IC44-46	MC74HC4050F	IC	3	
IC47	MC74HC4053F	IC	1	
IC48	MC14069UBF	IC	1	
IC49	MC14046BF	IC	1	
IC50	MC74HC175F	IC	1	
IC51	MC74HC4040F	IC	1	
IC52	MC74HC164F	IC	1	
IC53	MC74HC00AF	IC	1	
IC61	UPC319G2	IC	1	
IC62,63	NJM4556M	IC	2	
IC64	UPC4741G	IC	1	
IC65	NJM2904M	IC	1	
IC66	UPC317H	IC	1	
IC6201	AN78L05	IC	1	
IC6202	NJM4558M	IC	1	
IC6203	MN8305S	IC	1	
IC6204	MC74HC4053F	IC	1	
IC6205	NJM4558M	IC	1	
IC6206	MC74HC04AF	IC	1	
IC6207	MB81C4256A8P	IC	1	
IC6208	MB621926	IC	1	
ICS3	VJS2336A028	CONNECTOR (FEMALE)	1	
ICS8	VJS1830	CONNECTOR (FEMALE)	1	
ICS9	VJS2336A028	CONNECTOR (FEMALE)	1	
L1-L5	VLF0931	FILTER	5	
P211,12	VJP3151	CONNECTOR (MALE)	2	
P6201	VJP1250T	CONNECTOR (MALE)	1	
Q1	2SB710	TRANSISTOR	1	
Q2,Q3	2SD602	TRANSISTOR	2	
Q4	2SB710	TRANSISTOR	1	
Q5,Q6	UN2213	TRANSISTOR	2	
Q7	2SK198	TRANSISTOR	1	
Q8	2SB710	TRANSISTOR	1	
Q9	2SD602	TRANSISTOR	1	
Q10	2SD602	TRANSISTOR	1	
Q11	2SB710	TRANSISTOR	1	
Q12-25	UN2213	TRANSISTOR	14	
		RESISTORS		
R1,R2	ERJ6GEYJ103	M.RESISTOR CH1/10W 10K	2	
R3	VRE0034E164	M.RESISTOR CH 1/10W 160K	1	
R4	ERJ6GEYJ334	M.RESISTOR CH1/10W 330K	1	
R5-R7	ERJ6GEYJ103	M.RESISTOR CH1/10W 10K	3	
R8	ERJ6GEYJ273	M.RESISTOR CH1/10W 27K	1	
R9	ERJ6GEYJ823	M.RESISTOR CH1/10W 82K	1	
R10-12	ERJ6GEYJ154	M.RESISTOR CH1/10W 150K	3	
R13	ERJ6GEYJ471	M.RESISTOR CH1/10W 470	1	
R14	ERJ6GEYJ823	M.RESISTOR CH1/10W 82K	1	
R15	ERJ6GEYJ223	M.RESISTOR CH1/10W 22K	1	
R16	ERJ6GEYG153	M.RESISTOR CH1/10W 15K	1	
R17	ERJ6GEYJ681	M.RESISTOR CH1/10W 680	1	
R18	ERJ6GEYJ563	M.RESISTOR CH1/10W 56K	1	
R19	ERJ6GEYJ273	M.RESISTOR CH1/10W 27K	1	
R20	ERJ6GEYJ123	M.RESISTOR CH1/10W 12K	1	
R21	ERJ6GEYJ104	M.RESISTOR CH1/10W 100K	1	

Ref.No.	Part No.	Part Name & Description	Pcs	Remarks
R22	ERJ6GEYJ223	M.RESISTOR CH1/10W 22K	1	
R23	ERJ6GEYJ104	M.RESISTOR CH1/10W 100K	1	
R24	ERJ6GEYJ103	M.RESISTOR CH1/10W 10K	1	
R25	ERJ6GEYJ104	M.RESISTOR CH1/10W 100K	1	
R26,27	ERJ6GEYJ562	M.RESISTOR CH1/10W 5.6K	2	
R28	ERJ6GEYJ473	M.RESISTOR CH1/10W 47K	1	
R29,30	ERJ6GEYJ104	M.RESISTOR CH1/10W 100K	2	
R31	ERJ6GEYJ473	M.RESISTOR CH1/10W 47K	1	
R32	ERJ6GEYJ105	M.RESISTOR CH1/10W 1M	1	
R33-37	ERJ6GEYJ104	M.RESISTOR CH1/10W 100K	5	
R38	ERJ6GEYJ682	M.RESISTOR CH1/10W 6.8K	1	
R39,40	ERJ6GEYJ104	M.RESISTOR CH1/10W 100K	2	
R42	ERJ6GEYJ103	M.RESISTOR CH1/10W 10K	1	
R43	ERJ6GEYJ473	M.RESISTOR CH1/10W 47K	1	
R44	ERJ6GEYJ104	M.RESISTOR CH1/10W 100K	1	
R45,46	ERJ6GEYJ103	M.RESISTOR CH1/10W 10K	2	
R47	ERJ6GEYJ824	M.RESISTOR CH1/10W 820K	1	
R48-50	ERJ6GEYJ102	M.RESISTOR CH1/10W 1K	3	
R51	ERJ6GEYJ104	M.RESISTOR CH1/10W 100K	1	
R52,53	ERJ6GEYJ223	M.RESISTOR CH1/10W 22K	2	
R54	ERJ6GEYJ394	M.RESISTOR CH1/10W 390K	1	
R55,56	ERJ6GEYF333	M.RESISTOR CH1/10W 33K	2	
R57	ERJ6GEYJ103	M.RESISTOR CH1/10W 10K	1	
R58,59	ERJ6GEYJ105	M.RESISTOR CH1/10W 1M	2	
R60	ERJ6GEYJ223	M.RESISTOR CH1/10W 22K	1	
R61	ERJ6GEYJ103	M.RESISTOR CH1/10W 10K	1	
R62,63	ERJ6GEYJ222	M.RESISTOR CH1/10W 2.2K	2	
R64,65	ERJ6GEYJ4R7	M.RESISTOR CH1/10W 4.7	2	
R66	ERJ6GEYG680	M.RESISTOR CH1/10W 68	1	
R67	VRE0034E332	M.RESISTOR CH 1/10W 3.3K	1	
R68,69	VRE0034E822	M.RESISTOR CH 1/10W 8.2K	2	
R70	ERJ6GEYJ470	M.RESISTOR CH1/10W 47	1	
R71-73	VRE0034E332	M.RESISTOR CH 1/10W 3.3K	3	
R74	VRE0034E822	M.RESISTOR CH 1/10W 8.2K	1	
R75	ERJ6GEYJ470	M.RESISTOR CH1/10W 47	1	
R76	ERJ6GEYJ103	M.RESISTOR CH1/10W 10K	1	
R77	ERJ6GEYJ473	M.RESISTOR CH1/10W 47K	1	
R78	ERJ6GEYJ102	M.RESISTOR CH1/10W 1K	1	
R79	ERJ6GEYJ473	M.RESISTOR CH1/10W 47K	1	
R80	ERJ6GEYJ102	M.RESISTOR CH1/10W 1K	1	
R81-84	VRE0034E222	M.RESISTOR CH 1/10W 2.2K	4	
R85-88	ERJ6GEYJ103	M.RESISTOR CH1/10W 10K	4	
R89-98	ERJ6GEYJ104	M.RESISTOR CH1/10W 100K	10	
R99	ERJ6GEYJ103	M.RESISTOR CH1/10W 10K	1	
R100,01	ERJ6GEYJ562	M.RESISTOR CH1/10W 5.6K	2	
R102	ERJ6GEYJ474	M.RESISTOR CH1/10W 470K	1	
R103,04	ERJ6GEYJ562	M.RESISTOR CH1/10W 5.6K	2	
R105	ERJ6GEYJ105	M.RESISTOR CH1/10W 1M	1	
R106	ERJ6GEYJ562	M.RESISTOR CH1/10W 5.6K	1	
R107-10	ERJ6GEYJ103	M.RESISTOR CH1/10W 10K	4	
R111-22	ERJ6GEYJ152	M.RESISTOR CH1/10W 1.5K	12	
R123	ERJ6GEYJ103	M.RESISTOR CH1/10W 10K	1	
R124	ERJ6GEYJ241	M.RESISTOR CH1/10W 240	1	
R125	ERC14GJ226D	S.RESISTOR 1/4W 22M	1	
R126	ERJ6GEYJ822	M.RESISTOR CH1/10W 8.2K	1	
R127	ERJ6GEYJ223	M.RESISTOR CH1/10W 22K	1	
R128	ERJ6GEYJ684	M.RESISTOR CH1/10W 680K	1	
R129	ERJ6GEYJ564	M.RESISTOR CH1/10W 560K	1	
R130-33	ERJ6GEYJ104	M.RESISTOR CH1/10W 100K	4	
R134	ERJ6GEYJ473	M.RESISTOR CH1/10W 47K	1	
R6201	ERJ6GEYF472	M.RESISTOR CH1/10W 4.7K	1	
R6202	ERJ6GEYJ562	M.RESISTOR CH1/10W 5.6K	1	
R6203,04	ERJ6GEYF472	M.RESISTOR CH1/10W 4.7K	2	
R6205	ERJ6GEYJ123	M.RESISTOR CH1/10W 12K	1	
R6206	ERJ6GEYJ393	M.RESISTOR CH1/10W 39K	1	
R6207	ERJ6GEYJ822	M.RESISTOR CH1/10W 8.2K	1	
R6208	ERJ6GEYJ152	M.RESISTOR CH1/10W 1.5K	1	
R6209-11	ERJ6GEYJ823	M.RESISTOR CH1/10W 82K	3	
R6212	ERJ6GEYJ183	M.RESISTOR CH1/10W 18K	1	
R6213	ERJ6GEYJ223	M.RESISTOR CH1/10W 22K	1	
R6214	ERJ6GEYJ824	M.RESISTOR CH1/10W 820K	1	
R6215-23	ERJ6GEYJ103	M.RESISTOR CH1/10W 10K	9	
R6225-28	ERJ6GEY0R00	C.RESISTOR 1/10W 0	4	
R6230	ERJ6GEY0R00	C.RESISTOR 1/10W 0	1	

S7

S7 SYSTEM CONTROL VEP86092E

Ref.No.	Part No.	Part Name & Description	Pcs	Remarks
RA1,A2	EXBLD8103G	COMBI.R-R 10K	2	
TP1	VJR0646	TEST POINT	1	
TP4-P6	VJR0646	TEST POINT	3	
TP6002,03	VJR0646	TEST POINT	2	
TP6201	VJR0646	TEST POINT	1	
TPGA1	VJR0646	TEST POINT	1	
TPGD1,D2	VJR0646	TEST POINT	2	
VC1	ECRHA010A11	TRIMMER 10P	1	
VR1	VRV0109B502	V.RESISTOR 5K	1	
VR2	VRV0109B102	V.RESISTOR 1K	1	
VR6201	VRV0109B103	V.RESISTOR 10K	1	
W1	ERJ6GEY0R00	C.RESISTOR 1/10W 0	1	
W3	ERJ6GEY0R00	C.RESISTOR 1/10W 0	1	
W5	ERJ6GEY0R00	C.RESISTOR 1/10W 0	1	
W7	ERJ6GEY0R00	C.RESISTOR 1/10W 0	1	
W9	ERJ6GEY0R00	C.RESISTOR 1/10W 0	1	
W11	ERJ6GEY0R00	C.RESISTOR 1/10W 0	1	
W13	ERJ6GEY0R00	C.RESISTOR 1/10W 0	1	
W15	ERJ6GEY0R00	C.RESISTOR 1/10W 0	1	
W19	ERJ6GEY0R00	C.RESISTOR 1/10W 0	1	
W22	ERJ6GEY0R00	C.RESISTOR 1/10W 0	1	
W2P	VJP1990	CONNECTOR (MALE)	1	
W2S	VJS1990	CONNECTOR (FEMALE)	1	
X1	VSX0178	CRYSTAL OSCILLATOR	1	
X2	VSX0254	CRYSTAL OSCILLATOR	1	
X3	VSX0119	CRYSTAL OSCILLATOR	1	
X4	VSX0098	CRYSTAL OSCILLATOR	1	
X5	VSX0150	CRYSTAL OSCILLATOR	1	
X6	VSX0541	CRYSTAL OSCILLATOR	1	
X7	VSX0097	CRYSTAL OSCILLATOR	1	
		MISCELLANEOUS		
	VGQ0291	P.C.BOARD NAME PLATE	1	
	VML2143	CARD PULLER	1	
	VML2144	CARD PULLER	1	
	VXA4420	P.C.BOARD SHIELD PLATE	1	
	XNG26E	NUT	4	
	XTV3+6FFR	SCREW	5	
	XYN26+C12	SCREW	4	
	VJR0421	POST	4	
	VEP86092E	P.C.BOARD W/COMPONENT S7 SYSTEM CONTROL		
		CAPACITORS		
C1-C9	ECUM1H104ZFN	C.CAPACITOR CH 50V 0.1U	9	

Ref.No.	Part No.	Part Name & Description	Pcs	Remarks
C10-35	ECUM1H104ZFN	C.CAPACITOR CH 50V 0.1U	26	
C36-82	ECUM1H103ZFN	C.CAPACITOR CH 50V 0.01U	47	
C83	ECUM1H104ZFN	C.CAPACITOR CH 50V 0.1U	1	
C84-86	ECUM1H103ZFN	C.CAPACITOR CH 50V 0.01U	3	
C88	ECUM1H104ZFN	C.CAPACITOR CH 50V 0.1U	1	
C89	ECUM1H224ZFM	C.CAPACITOR CH 50V 0.22U	1	
C101,02	ECUM1H220JCN	C.CAPACITOR CH 50V 22P	2	
C103	ECUM1H104ZFN	C.CAPACITOR CH 50V 0.1U	1	
C104	ECA1HXS2R2	E.CAPACITOR 50V 2.2U	1	
C105	ECUM1H103KBN	C.CAPACITOR CH 50V 0.01U	1	
C106	ECUM1H101JCN	C.CAPACITOR CH 50V 100P	1	
C107-28	ECUM1H103KBN	C.CAPACITOR CH 50V 0.01U	22	
C129	ECA1AXS680	E.CAPACITOR 10V 68U	1	
C130-33	ECUM1H103KBN	C.CAPACITOR CH 50V 0.01U	4	
C134	ECA1HXS0R1	E.CAPACITOR 50V 0.1U	1	
C135	ECA1CXS100	E.CAPACITOR 16V 10U	1	
C136	ECA1AXS680	E.CAPACITOR 10V 68U	1	
C200	ECKF1H471KB	C.CAPACITOR 50V 470P	1	
C201	ECKF1H102KB	C.CAPACITOR 50V 1000P	1	
D1,D2	MA151K	DIODE	2	
IC1	HD64180ZRP8	IC	1	
IC2	VSI1092V	IC	1	
IC3	MB8464A80LFF	IC	1	
IC4	DS1225Y-200	IC	1	
IC5,C6	MB8421-90LPF	IC	2	
IC7,C8	MB89363BPF	IC	2	
IC9	UPD71054GB	IC	1	
IC10,11	UPD71054GB	IC	2	
IC12-23	MC74HC574AF	IC	12	
IC24	MC74HC245AF	IC	1	
IC25-27	MC74HC541AF	IC	3	
IC28	MC74HC138AF	IC	1	
IC29	MC74HC139AF	IC	1	
IC30-34	MC74HC138AF	IC	5	
IC35	MC74HC4040F	IC	1	
IC36	MC74HC164F	IC	1	
IC37	MC74HC175F	IC	1	
IC38	MC74HC161AF	IC	1	
IC39	MC74HC164F	IC	1	
IC40-43	MC74HC541AF	IC	4	
IC44	MC74HC164F	IC	1	
IC45	MC74HC175F	IC	1	
IC46	MC74HC161AF	IC	1	
IC47	MC74HC164F	IC	1	
IC48,49	MC74HC541AF	IC	2	
IC50	MC74HC244AF	IC	1	
IC51,52	MC74HC4040F	IC	2	
IC53	MC74HC165F	IC	1	
IC54	MC14094BF	IC	1	
IC55,56	MC34051M	IC	2	
IC57,58	MC74HC164F	IC	2	
IC59,60	MC74HC158F	IC	2	
IC61	MC74HC4050F	IC	1	
IC62,63	MC74HC32AF	IC	2	
IC64	MC74HC08AF	IC	1	
IC65,66	MC74HC74AF	IC	2	
IC67	MC74HC27F	IC	1	
IC68	MC74HC02AF	IC	1	
IC69	MC74HC74AF	IC	1	
IC70	MC14584BF	IC	1	
IC71	MC74HC74AF	IC	1	
IC72,73	MC74HC04AF	IC	2	
IC74	MC74HC02AF	IC	1	
IC75-82	MC74HC4050F	IC	8	
IC83	MC74HC573AF	IC	1	
IC84	NJM2901M	IC	1	
IC85	NJM2904M	IC	1	
IC86	NJM2902M	IC	1	
IC87	TL7705CPSB	IC	1	

S8 AUDIO PROCESS VEP84111A
S8 SUB 1 VEP84158D

Ref.No.	Part No.	Part Name & Description	Pcs	Remarks
IC88	UPC317H	IC	1	
IC89,90	SN74S1051NS	DIODE	2	
ICS1	VJS1830	CONNECTOR (FEMALE)	1	
ICS2	VJS2336A028	CONNECTOR (FEMALE)	1	
L1-L3	VLF0931	FILTER	3	
P213,14	VJP3151	CONNECTOR (MALE)	2	
Q1	UN2112	TRANSISTOR	1	
Q2	2SB710	TRANSISTOR	1	
Q3	UN2213	TRANSISTOR	1	
Q4	2SD602	TRANSISTOR	1	
Q5	UN2224	TRANSISTOR	1	
Q6-Q9	UN2213	TRANSISTOR	4	
Q10	UN2213	TRANSISTOR	1	
		RESISTORS		
R1-R9	ERJ6GEYJ104	M.RESISTOR CH1/10W 100K	9	
R10	ERJ6GEYJ104	M.RESISTOR CH1/10W 100K	1	
R11	ERJ6GEYJ103	M.RESISTOR CH1/10W 10K	1	
R12,13	ERJ6GEYJ562	M.RESISTOR CH1/10W 5.6K	2	
R14	ERJ6GEYJ222	M.RESISTOR CH1/10W 2.2K	1	
R15	ERJ6GEYJ474	M.RESISTOR CH1/10W 470K	1	
R16-18	ERJ6GEYJ473	M.RESISTOR CH1/10W 47K	3	
R19,20	ERJ6GEYJ104	M.RESISTOR CH1/10W 100K	2	
R21-23	ERJ6GEYJ473	M.RESISTOR CH1/10W 47K	3	
R24	ERJ6GEYJ562	M.RESISTOR CH1/10W 5.6K	1	
R25	ERJ6GEYJ103	M.RESISTOR CH1/10W 10K	1	
R26,27	ERJ6GEYJ104	M.RESISTOR CH1/10W 100K	2	
R28,29	ERJ6GEYJ103	M.RESISTOR CH1/10W 10K	2	
R30	ERJ8GCJ151	M.RESISTOR CH 1/8W 150	1	
R31-50	ERJ6GEYJ103	M.RESISTOR CH1/10W 10K	20	
R51-53	ERJ6GEYJ393	M.RESISTOR CH1/10W 39K	3	
R54	ERJ6GEYJ103	M.RESISTOR CH1/10W 10K	1	
R55,56	ERJ6GEYJ222	M.RESISTOR CH1/10W 2.2K	2	
R57,58	ERJ6GEYJ103	M.RESISTOR CH1/10W 10K	2	
R59,60	ERJ6GEYF333	M.RESISTOR CH1/10W 33K	2	
R61,62	ERJ6GEYJ564	M.RESISTOR CH1/10W 560K	2	
R63	ERJ6GEYJ103	M.RESISTOR CH1/10W 10K	1	
R64	ERJ6GEYJ104	M.RESISTOR CH1/10W 100K	1	
R65	ERJ6GEYJ332	M.RESISTOR CH1/10W 3.3K	1	
R66	ERJ6GEYJ474	M.RESISTOR CH1/10W 470K	1	
R67	ERJ6GEYJ105	M.RESISTOR CH1/10W 1M	1	
R68	ERJ6GEYJ222	M.RESISTOR CH1/10W 2.2K	1	
R69	ERJ6GEYJ104	M.RESISTOR CH1/10W 100K	1	
R70	ERJ8GCYJ220	M.RESISTOR CH 1/8W 22	1	
R71-88	ERJ6GEYJ103	M.RESISTOR CH1/10W 10K	18	
R89,90	ERJ6GEYJ223	M.RESISTOR CH1/10W 22K	2	
R91,92	ERJ6GEYJ331	M.RESISTOR CH1/10W 330	2	
R93	ERJ6GEYJ122	M.RESISTOR CH1/10W 1.2K	1	
R94,95	ERJ6GEYJ391	M.RESISTOR CH1/10W 390	2	
R96	ERJ6GEYJ122	M.RESISTOR CH1/10W 1.2K	1	
R97	ERJ6GEYJ473	M.RESISTOR CH1/10W 47K	1	
R98	ERJ6GEYJ103	M.RESISTOR CH1/10W 10K	1	
R99	ERJ6GEYJ104	M.RESISTOR CH1/10W 100K	1	
R100-10	ERJ6GEYJ104	M.RESISTOR CH1/10W 100K	11	
R111,12	ERJ6GEYJ562	M.RESISTOR CH1/10W 5.6K	2	
R113-22	ERJ6GEYJ104	M.RESISTOR CH1/10W 100K	10	
R123	ERJ6GEYJ105	M.RESISTOR CH1/10W 1M	1	
R124	ERJ6GEYJ241	M.RESISTOR CH1/10W 240	1	
RA1-A6	EXBLD8103G	COMBI.R-R 10K	6	

S8 SUB 2 VEP84137A
S8 SUB 3 VEP84142A

Ref.No.	Part No.	Part Name & Description	Pcs	Remarks
TP1-P6	VJR0646	TEST POINT	6	
TPGA1	VJR0646	TEST POINT	1	
TPGD1,D2	VJR0646	TEST POINT	2	
VR1	VRV0109B201	V.RESISTOR 200	1	
X1	VSX0150	CRYSTAL OSCILLATOR	1	
		MISCELLANEOUS		
	VGQ0291	P.C.BOARD NAME PLATE	1	
	VML2143	CARD PULLER	1	
	VML2144	CARD PULLER	1	
	VXA4420	P.C.BOARD SHIELD PLATE	1	
	XNG26E	NUT	4	
	XTV3+6FFR	SCREW	5	
	XYN26+C12	SCREW	4	
	VEP84111A	P.C.BOARD W/COMPONENT		
		S8 AUDIO PROCESS		
	VEP84158D	P.C.BOARD W/COMPONENT		FOR VEP84111A
		S8 SUB 1		
	VEP84137A	P.C.BOARD W/COMPONENT		FOR VEP84111A
		S8 SUB 2		
	VEP84142A	P.C.BOARD W/COMPONENT		FOR VEP84111A
		S8 SUB 3		
		CAPACITORS		
C1001	ECUM1E104ZFN	C.CAPACITOR 25V 0.1U	1	
C4001	ECUM1E104ZFN	C.CAPACITOR 25V 0.1U	1	
C4002,03	ECA1CXLV101	E.CAPACITOR 16V 100U	2	
C4004	ECA1CXS470	E.CAPACITOR 16V 47U	1	
C4005	ECA1CXLV101	E.CAPACITOR 16V 100U	1	
C4006	ECA1CXS470	E.CAPACITOR 16V 47U	1	
C4007	ECUM1H181JCN	C.CAPACITOR CH 50V 180P	1	
C4008	ECA1CXLV101	E.CAPACITOR 16V 100U	1	
C4009	ECA1CXS470	E.CAPACITOR 16V 47U	1	
C4010	ECUM1E104ZFN	C.CAPACITOR 25V 0.1U	1	
C4011,12	ECA1HXNV2R2	E.CAPACITOR 50V 2.2U	2	
C4020-25	ECUM1E104ZFN	C.CAPACITOR 25V 0.1U	6	
C4201	ECUM1H150JCN	C.CAPACITOR CH 50V 15P	1	
C4202	ECUM1H100DCN	C.CAPACITOR CH 50V 10P	1	
C4203	ECUM1E104ZFN	C.CAPACITOR 25V 0.1U	1	
C4401,02	ECUM1H121JCN	C.CAPACITOR CH 50V 120P	2	
C4403,04	ECUM1E104ZFN	C.CAPACITOR 25V 0.1U	2	
C4405	ECA1CXLV101	E.CAPACITOR 16V 100U	1	
C4406,07	ECUM1E104ZFN	C.CAPACITOR 25V 0.1U	2	
C4408	ECA1CXLV101	E.CAPACITOR 16V 100U	1	
C4409,10	ECUM1H103KBN	C.CAPACITOR CH 50V 0.01U	2	
C4411,12	ECUM1H101JCN	C.CAPACITOR CH 50V 100P	2	
C4413,14	ECA1CXS100	E.CAPACITOR 16V 10U	2	
C4551,52	ECUM1E104ZFN	C.CAPACITOR 25V 0.1U	2	
C4553	ECA1CXS100	E.CAPACITOR 16V 10U	1	
C4554	ECUM1H471JCN	C.CAPACITOR CH 50V 470P	1	
C4555	ECUM1E104ZFN	C.CAPACITOR 25V 0.1U	1	
C4556	ECA1CXS100	E.CAPACITOR 16V 10U	1	
C4557	ECUM1H472KBN	C.CAPACITOR CH 50V 4700P	1	
C4558,59	ECUM1H103ZFN	C.CAPACITOR CH 50V 0.01U	2	
C4560	ECUM1E104ZFN	C.CAPACITOR 25V 0.1U	1	
C4561	ECA1CXLV101	E.CAPACITOR 16V 100U	1	
C4562	ECUM1E104ZFN	C.CAPACITOR 25V 0.1U	1	
C4563,64	ECUM1H103ZFN	C.CAPACITOR CH 50V 0.01U	2	
C4565	ECUM1H220JCN	C.CAPACITOR CH 50V 22P	1	
C4566-68	ECUM1E104ZFN	C.CAPACITOR 25V 0.1U	3	
C4569	ECA1HXLV010	E.CAPACITOR 50V 1U	1	

S8

Ref.No.	Part No.	Part Name & Description	Pcs	Remarks
C4901-04	ECUM1E104ZFN	C.CAPACITOR 25V 0.1U	4	
D4001-04	MA157	DIODE	4	
D4401-04	MA151K	DIODE	4	
IC1001	VSI0995	IC	1	
IC1002	MB8464A80LFF	IC	1	
IC4001	MC10124L	IC	1	
IC4002	MC10125L	IC	1	
IC4003	PC74HCT541T	IC	1	
IC4004,05	SN74LS541NS	IC	2	
IC4006,07	DS9637ACN	IC	2	
IC4008-10	SN75158P	IC	3	
IC4011	PC74HCT574	IC	1	
IC4051	MC74HC573AF	IC	1	
IC4052	VSI0930B	IC	1	
IC4053	UPD71055GB	IC	1	
IC4054,55	MC74HC74AF	IC	2	
IC4101	MN53030VPR	IC	1	
IC4151	MC74HC595AF	IC	1	
IC4152	74AC374SJ	IC	1	
IC4153	MC74HC595AF	IC	1	
IC4154	74AC374SJ	IC	1	
IC4155,56	MB8464A80LFF	IC	2	
IC4157	MC74HC04AF	IC	1	
IC4201	TMS320C25FNL	IC	1	
IC4202	VSI0924	IC	1	
IC4203	VSI0922	IC	1	
IC4204	MC74HC04AF	IC	1	
IC4205	MC74HC4075F	IC	1	
IC4251-53	MC74HC273AF	IC	3	
IC4254	MM74HC166M	IC	1	
IC4255-57	MC74HC273AF	IC	3	
IC4258	MM74HC166M	IC	1	
IC4401,02	AN78L05	IC	2	
IC4403,04	CD74AC04M	IC	2	
IC4406	L7A0541	IC	1	
IC4407	74AC157SJ	IC	1	
IC4408	L7A0541	IC	1	
IC4410	MB81C68A35PS	IC	1	
IC4412	VSI0926	IC	1	
IC4413,14	UPD42101G-3	IC	2	
IC4415	VSI0928B	IC	1	
IC4451	MN56200VPV	IC	1	
IC4452	L7A0651	IC	1	
IC4453-55	MC74HC541AF	IC	3	
IC4501	VSI0927A	IC	1	
IC4503	VSI0929	IC	1	
IC4505,06	MB8464A80LFF	IC	2	
IC4508	VSI0985B	IC	1	
IC4551	MN8305S	IC	1	
IC4552-54	NJM5532MD	IC	3	
IC4901	MC74HC541AF	IC	1	
IC4902	MB621926	IC	1	
IC4903	MB81C4256A8P	IC	1	
IC4904	MC74HC541AF	IC	1	
ICS1001	VJS3122A044	CONNECTOR (FEMALE)	1	
ICS4052	VJS2575	CONNECTOR (FEMALE)	1	
ICS4201	VJS3107	CONNECTOR (FEMALE)	1	
ICS4202,03	VJS2575	CONNECTOR (FEMALE)	2	
ICS4412	VJS3122A044	CONNECTOR (FEMALE)	1	
ICS4415	VJS3096328	CONNECTOR (FEMALE)	1	
ICS4501	VJS3096328	CONNECTOR (FEMALE)	1	
ICS4503	VJS3122A044	CONNECTOR (FEMALE)	1	
ICS4508	VJS3096328	CONNECTOR (FEMALE)	1	
L4001-06	VLF0931	FILTER	6	
L4008	VLF0931	FILTER	1	
L4201	VLQEL05S1R8J	COIL 1.8UH	1	

Ref.No.	Part No.	Part Name & Description	Pcs	Remarks
LPF4551	VLF0928	FILTER	1	
OSC1,C2	VSX0392	IC	2	
P1,P2	VJP2509	CONNECTOR (MALE)	2	
P215,16	VJP3151	CONNECTOR (MALE)	2	
PC4001-11	ECUM1E104ZFN	C.CAPACITOR 25V 0.1U	11	
PC4051-55	ECUM1E104ZFN	C.CAPACITOR 25V 0.1U	5	
PC4101	ECUM1E104ZFN	C.CAPACITOR 25V 0.1U	1	
PC4151-57	ECUM1E104ZFN	C.CAPACITOR 25V 0.1U	7	
PC4201-05	ECUM1E104ZFN	C.CAPACITOR 25V 0.1U	5	
PC4251-58	ECUM1E104ZFN	C.CAPACITOR 25V 0.1U	8	
PC4401-04	ECUM1E104ZFN	C.CAPACITOR 25V 0.1U	4	
PC4406-08	ECUM1E104ZFN	C.CAPACITOR 25V 0.1U	3	
PC4410	ECUM1E104ZFN	C.CAPACITOR 25V 0.1U	1	
PC4412-15	ECUM1E104ZFN	C.CAPACITOR 25V 0.1U	4	
PC4451-55	ECUM1E104ZFN	C.CAPACITOR 25V 0.1U	5	
PC4501	ECUM1E104ZFN	C.CAPACITOR 25V 0.1U	1	
PC4503	ECUM1E104ZFN	C.CAPACITOR 25V 0.1U	1	
PC4505-10	ECUM1E104ZFN	C.CAPACITOR 25V 0.1U	6	
P1S	VJS3109	CONNECTOR (FEMALE)	1	
P2S	VJS3109	CONNECTOR (FEMALE)	1	
Q4401-06	2SC2188	TRANSISTOR	6	
Q4407,08	2SJ43	TRANSISTOR	2	
		RESISTORS		
R4001-04	ERJ6GEYJ101	M.RESISTOR CH1/10W 100	4	
R4006-13	ERJ6GEYJ101	M.RESISTOR CH1/10W 100	8	
R4014,15	ERJ6GEYJ471	M.RESISTOR CH1/10W 470	2	
R4016-22	ERJ6GEYJ101	M.RESISTOR CH1/10W 100	7	
R4401,02	ERJ6GEYJ102	M.RESISTOR CH1/10W 1K	2	
R4403,04	ERJ6GEYJ105	M.RESISTOR CH1/10W 1M	2	
R4405,06	ERJ6GEYJ332	M.RESISTOR CH1/10W 3.3K	2	
R4407,08	ERJ6GEYJ103	M.RESISTOR CH1/10W 10K	2	
R4409,10	ERJ6GEYJ332	M.RESISTOR CH1/10W 3.3K	2	
R4411,12	ERJ6GEYJ101	M.RESISTOR CH1/10W 100	2	
R4551	ERJ6GEYJ101	M.RESISTOR CH1/10W 100	1	
R4552	ERJ6GEYJ152	M.RESISTOR CH1/10W 1.5K	1	
R4553-55	ERJ6GEYJ823	M.RESISTOR CH1/10W 82K	3	
R4556	ERJ6GEYJ101	M.RESISTOR CH1/10W 100	1	
R4557	ERJ6GEYJ183	M.RESISTOR CH1/10W 18K	1	
R4558	ERJ6GEYJ822	M.RESISTOR CH1/10W 8.2K	1	
R4560	ERJ6GEYF472	M.RESISTOR CH1/10W 4.7K	1	
R4561	ERJ6GEYJ101	M.RESISTOR CH1/10W 100	1	
R4562	ERJ6GEYJ223	M.RESISTOR CH1/10W 22K	1	
R4563-67	ERJ6GEYF472	M.RESISTOR CH1/10W 4.7K	5	
R4568-70	ERJ6GEYJ101	M.RESISTOR CH1/10W 100	3	
R4571	ERJ6GEYF333	M.RESISTOR CH1/10W 33K	1	
R4572	ERJ6GEYJ682	M.RESISTOR CH1/10W 6.8K	1	
R4573	ERJ6GEYF472	M.RESISTOR CH1/10W 4.7K	1	
R4902,03	ERJ6GEY0R00	C.RESISTOR 1/10W 0	2	
R4905	ERJ6GEYJ103	M.RESISTOR CH1/10W 10K	1	
R4906	ERJ6GEY0R00	C.RESISTOR 1/10W 0	1	
T1-T4	VLT0654	TRANSFORMER	4	

S9 VIDEO A/D PLL VEP88073A
S9 SUB VEP88100B

Ref.No.	Part No.	Part Name & Description	Pcs	Remarks
TP4101	VJR0646	TEST POINT	1	
TP4401,02	VJR0646	TEST POINT	2	
TP4451	VJR0646	TEST POINT	1	
TP4453	VJR0400Y	TEST POINT	1	
TP4456	VJR0646	TEST POINT	1	
TPG4001-03	VJR0646	TEST POINT	3	
VR4401,02	VRV0109B202	V.RESISTOR 2K	2	
VR4403,04	VRV0109B501	V.RESISTOR 500	2	
VR4551	VRV0109B502	V.RESISTOR 5K	1	
X4201	VSX0453	CRYSTAL OSCILLATOR	1	
		MISCELLANEOUS		
	VGQ0291	P.C.BOARD NAME PLATE	1	
	VML2143	CARD PULLER	1	
	VML2144	CARD PULLER	1	
	VMZ1970	BARRIER	1	
	VXA4420	P.C.BOARD SHIELD PLATE	1	
	XNG26E	NUT	4	
	XTV3+6FFR	SCREW	5	
	XYN26+C12	SCREW	4	
	VJP2509	CONNECTOR (MALE)	1	
	VJS3109	CONNECTOR (FEMALE)	1	
	VEP88073A	P.C.BOARD W/COMPONENT		
		S9 VIDEO A/D PLL		
	VEP88100B	P.C.BOARD W/COMPONENT		FOR VEP88073A
		S9 SUB		
		CAPACITORS		
C101	ECUM1E104ZFN	C.CAPACITOR 25V 0.1U	1	
C102	ECEA1CGE331	E.CAPACITOR 16V 330U	1	
C103,04	ECUM1E104ZFN	C.CAPACITOR 25V 0.1U	2	
C105	ECEA1CGE471	E.CAPACITOR 16V 470U	1	
C106	ECUM1E104ZFN	C.CAPACITOR 25V 0.1U	1	
C107,08	ECA1CXNV470	E.CAPACITOR 16V 47U	2	
C109	ECA1VXLV470	E.CAPACITOR 35V 47U	1	
C110	ECUM1E104ZFN	C.CAPACITOR 25V 0.1U	1	
C111	ECA1VXLV470	E.CAPACITOR 35V 47U	1	
C112	ECUM1E104ZFN	C.CAPACITOR 25V 0.1U	1	
C113,14	ECA1AXLV331X	E.CAPACITOR 10V 330U	2	
C115	ECUM1E104ZFN	C.CAPACITOR 25V 0.1U	1	
C116	ECA1HXNV4R7	E.CAPACITOR 50V 4.7U	1	
C117	ECUM1E104ZFN	C.CAPACITOR 25V 0.1U	1	
C118	ECUM1H391JN	C.CAPACITOR CH 50V 390P	1	
C119	ECUM1H020DCN	C.CAPACITOR CH 50V 2P	1	
C120-22	ECUM1E104ZFN	C.CAPACITOR 25V 0.1U	3	
C124	ECA1CXLV101	E.CAPACITOR 16V 100U	1	
C125,26	ECUM1E104ZFN	C.CAPACITOR 25V 0.1U	2	
C127,28	ECA1VXLV470	E.CAPACITOR 35V 47U	2	
C129	ECUM1E104ZFN	C.CAPACITOR 25V 0.1U	1	
C130	ECUM1H331JCN	C.CAPACITOR CH 50V 330P	1	
C131	ECUM1H470JCN	C.CAPACITOR CH 50V 47P	1	
C132,33	ECQB1H104JF	P.CAPACITOR 50V 0.1U	2	
C134-42	ECUM1E104ZFN	C.CAPACITOR 25V 0.1U	9	
C144	ECUM1E104ZFN	C.CAPACITOR 25V 0.1U	1	
C146-56	ECUM1E104ZFN	C.CAPACITOR 25V 0.1U	11	

Ref.No.	Part No.	Part Name & Description	Pcs	Remarks
C158-63	ECUM1E104ZFN	C.CAPACITOR 25V 0.1U	6	
C165,66	ECUM1E104ZFN	C.CAPACITOR 25V 0.1U	2	
C167	ECA1VXLV470	E.CAPACITOR 35V 47U	1	
C168	ECUM1H122JN	C.CAPACITOR CH 50V 1200P	1	
C169	ECUM1H150JCN	C.CAPACITOR CH 50V 15P	1	
C170	ECRHA040E41	TRIMMER 40P	1	
C171	ECUM1H180JCN	C.CAPACITOR CH 50V 18P	1	
C172	ECUM1H100DCN	C.CAPACITOR CH 50V 10P	1	
C173	ECUM1H270JCN	C.CAPACITOR CH 50V 27P	1	
C174	ECUM1E104ZFN	C.CAPACITOR 25V 0.1U	1	
C201,02	ECUM1E104ZFN	C.CAPACITOR 25V 0.1U	2	
C203,04	ECA1VXLV470	E.CAPACITOR 35V 47U	2	
C205	ECUM1E104ZFN	C.CAPACITOR 25V 0.1U	1	
C206	ECUM1H180JCN	C.CAPACITOR CH 50V 18P	1	
C207	ECUM1H680JCN	C.CAPACITOR CH 50V 68P	1	
C208,09	ECQB1H104JF	P.CAPACITOR 50V 0.1U	2	
C210	ECA1HXNV010	E.CAPACITOR 50V 1U	1	
C211	ECUM1E104ZFN	C.CAPACITOR 25V 0.1U	1	
C212	ECUM1H103KBN	C.CAPACITOR CH 50V 0.01U	1	
C213	ECUM1H820JCN	C.CAPACITOR CH 50V 82P	1	
C214,15	ECUM1H103KBN	C.CAPACITOR CH 50V 0.01U	2	
C216	ECUM1H470JCN	C.CAPACITOR CH 50V 47P	1	
C217	ECUM1E104ZFN	C.CAPACITOR 25V 0.1U	1	
C218	ECUM1H470JCN	C.CAPACITOR CH 50V 47P	1	
C219	ECQB1H104JF	P.CAPACITOR 50V 0.1U	1	
C220	ECUM1E104ZFN	C.CAPACITOR 25V 0.1U	1	
C221	ECUM1H470JCN	C.CAPACITOR CH 50V 47P	1	
C222	ECUM1E104ZFN	C.CAPACITOR 25V 0.1U	1	
C223	ECUM1H470JCN	C.CAPACITOR CH 50V 47P	1	
C224	ECA1CXLV101	E.CAPACITOR 16V 100U	1	
C225	ECUM1E104ZFN	C.CAPACITOR 25V 0.1U	1	
C226	ECUM1H270JCN	C.CAPACITOR CH 50V 27P	1	
C227	ECUM1H103KBN	C.CAPACITOR CH 50V 0.01U	1	
C228	ECUM1E104ZFN	C.CAPACITOR 25V 0.1U	1	
C229	ECUM1H220JCN	C.CAPACITOR CH 50V 22P	1	
C230	ECUM1E104ZFN	C.CAPACITOR 25V 0.1U	1	
C231	ECQB1H104JF	P.CAPACITOR 50V 0.1U	1	
C232,33	ECUM1E104ZFN	C.CAPACITOR 25V 0.1U	2	
C234	ECQB1H104JF	P.CAPACITOR 50V 0.1U	1	
C235	ECA1HXNV010	E.CAPACITOR 50V 1U	1	
C236-42	ECUM1E104ZFN	C.CAPACITOR 25V 0.1U	7	
C243	ECA1CXLV101	E.CAPACITOR 16V 100U	1	
C244-46	ECUM1E104ZFN	C.CAPACITOR 25V 0.1U	3	
C247	ECA1CXLV101	E.CAPACITOR 16V 100U	1	
C248-51	ECUM1E104ZFN	C.CAPACITOR 25V 0.1U	4	
C252	ECA1CXLV101	E.CAPACITOR 16V 100U	1	
C253	ECUM1E104ZFN	C.CAPACITOR 25V 0.1U	1	
C254	ECA1CXLV101	E.CAPACITOR 16V 100U	1	
C255,56	ECUM1E104ZFN	C.CAPACITOR 25V 0.1U	2	
C257	ECQB1H223JF	P.CAPACITOR 50V 0.022U	1	
C258	ECUM1E104ZFN	C.CAPACITOR 25V 0.1U	1	
C259	ECUM1H102JN	C.CAPACITOR CH 50V 1000P	1	
C260-62	ECUM1E104ZFN	C.CAPACITOR 25V 0.1U	3	
C264	ECA1CXLV101	E.CAPACITOR 16V 100U	1	
C265	ECA1HXS010	E.CAPACITOR 50V 1U	1	
C266	ECUM1H472KBN	C.CAPACITOR CH 50V 4700P	1	
C301-13	ECUM1E104ZFN	C.CAPACITOR 25V 0.1U	13	
C314	ECA1CXLV101	E.CAPACITOR 16V 100U	1	
C315	ECUM1E104ZFN	C.CAPACITOR 25V 0.1U	1	
C316	ECA1CXLV101	E.CAPACITOR 16V 100U	1	
C317	ECUM1E104ZFN	C.CAPACITOR 25V 0.1U	1	
C318	ECA1CXLV101	E.CAPACITOR 16V 100U	1	
C319	ECUM1E104ZFN	C.CAPACITOR 25V 0.1U	1	
C320	ECA1CXLV101	E.CAPACITOR 16V 100U	1	
C321	ECUM1E104ZFN	C.CAPACITOR 25V 0.1U	1	
C322	ECA1CXLV101	E.CAPACITOR 16V 100U	1	
C323	ECUM1E104ZFN	C.CAPACITOR 25V 0.1U	1	
C324	ECA1CXLV101	E.CAPACITOR 16V 100U	1	
C325	ECUM1E104ZFN	C.CAPACITOR 25V 0.1U	1	
C326	ECUM1H560JCN	C.CAPACITOR CH 50V 56P	1	
C401	ECA1VXLV470	E.CAPACITOR 35V 47U	1	
C402	ECUM1E104ZFN	C.CAPACITOR 25V 0.1U	1	
C403	ECA1CXLV101	E.CAPACITOR 16V 100U	1	
C404	ECUM1E104ZFN	C.CAPACITOR 25V 0.1U	1	
C405	ECQM1H822JF	P.CAPACITOR 50V 8200P	1	

Ref.No.	Part No.	Part Name & Description	Pcs	Remarks
C406	ECA1CXLV101	E.CAPACITOR 16V 100U	1	
C407,08	ECUM1E104ZFN	C.CAPACITOR 25V 0.1U	2	
C409	ECUM1H271JCN	C.CAPACITOR CH 50V 270P	1	
C410	ECA1HXS010	E.CAPACITOR 50V 1U	1	
C411	ECQM1H224JF	P.CAPACITOR 50V 0.22U	1	
C412	ECUM1E104ZFN	C.CAPACITOR 25V 0.1U	1	
C413	ECUM1H391JN	C.CAPACITOR CH 50V 390P	1	
C414,15	ECUM1E104ZFN	C.CAPACITOR 25V 0.1U	2	
C416	ECA1CXLV101	E.CAPACITOR 16V 100U	1	
C417	ECUM1E104ZFN	C.CAPACITOR 25V 0.1U	1	
C418	ECA1VXLV470	E.CAPACITOR 35V 47U	1	
C419	ECUM1E104ZFN	C.CAPACITOR 25V 0.1U	1	
C420	ECA1CXLV101	E.CAPACITOR 16V 100U	1	
C421-23	ECUM1E104ZFN	C.CAPACITOR 25V 0.1U	3	
C424	ECQB1H104JF	P.CAPACITOR 50V 0.1U	1	
C425	ECUM1E104ZFN	C.CAPACITOR 25V 0.1U	1	
C426	ECUM1H822KBN	C.CAPACITOR CH 50V 8200P	1	
C427-29	ECUM1E104ZFN	C.CAPACITOR 25V 0.1U	3	
C430	ECA1CXLV101	E.CAPACITOR 16V 100U	1	
C431-34	ECUM1E104ZFN	C.CAPACITOR 25V 0.1U	4	
C435	ECQB1H104JF	P.CAPACITOR 50V 0.1U	1	
C436-40	ECUM1E104ZFN	C.CAPACITOR 25V 0.1U	5	
C501-04	ECUM1E104ZFN	C.CAPACITOR 25V 0.1U	4	
C506	ECUM1E104ZFN	C.CAPACITOR 25V 0.1U	1	
C508-11	ECUM1E104ZFN	C.CAPACITOR 25V 0.1U	4	
C601,02	ECUM1E104ZFN	C.CAPACITOR 25V 0.1U	2	
C603	ECUM1H101JCN	C.CAPACITOR CH 50V 100P	1	
C604	ECUM1H122JN	C.CAPACITOR CH 50V 1200P	1	
C605	ECUM1H101JCN	C.CAPACITOR CH 50V 100P	1	
C606-08	ECUM1E104ZFN	C.CAPACITOR 25V 0.1U	3	
C609	ECQM1H332JF	P.CAPACITOR 50V 3300P	1	
C610	ECUM1H103KBN	C.CAPACITOR CH 50V 0.01U	1	
C611-15	ECUM1E104ZFN	C.CAPACITOR 25V 0.1U	5	
C616	ECA1VXLV470	E.CAPACITOR 35V 47U	1	
C617-20	ECUM1E104ZFN	C.CAPACITOR 25V 0.1U	4	
C621	ECUM1H221JCN	C.CAPACITOR CH 50V 220P	1	
C622	ECUM1H102JN	C.CAPACITOR CH 50V 1000P	1	
C623	ECUM1E104ZFN	C.CAPACITOR 25V 0.1U	1	
C624	ECQB1H223JF	P.CAPACITOR 50V 0.022U	1	
C625-28	ECUM1E104ZFN	C.CAPACITOR 25V 0.1U	4	
C629	ECA1VXLV470	E.CAPACITOR 35V 47U	1	
C630-33	ECUM1E104ZFN	C.CAPACITOR 25V 0.1U	4	
C701	ECUM1E104ZFN	C.CAPACITOR 25V 0.1U	1	
C702	ECQM1H683JF	P.CAPACITOR 50V 0.068U	1	
C703,04	ECUM1E104ZFN	C.CAPACITOR 25V 0.1U	2	
C706-08	ECUM1E104ZFN	C.CAPACITOR 25V 0.1U	3	
C709	ECUM1H820JCN	C.CAPACITOR CH 50V 82P	1	
C710,11	ECUM1E104ZFN	C.CAPACITOR 25V 0.1U	2	
C712	ECUM1H102JN	C.CAPACITOR CH 50V 1000P	1	
C713	ECUM1E104ZFN	C.CAPACITOR 25V 0.1U	1	
C714	ECQB1H223JF	P.CAPACITOR 50V 0.022U	1	
C715,16	ECUM1E104ZFN	C.CAPACITOR 25V 0.1U	2	
C717,18	ECA1VXLV470	E.CAPACITOR 35V 47U	2	
C719	ECUM1H121JCN	C.CAPACITOR CH 50V 120P	1	
C720	ECUM1H271JCN	C.CAPACITOR CH 50V 270P	1	
C721	ECUM1H181JCN	C.CAPACITOR CH 50V 180P	1	
C722	ECUM1H103ZFN	C.CAPACITOR CH 50V 0.01U	1	
C723	ECUM1H102JN	C.CAPACITOR CH 50V 1000P	1	
C724	ECUM1E104ZFN	C.CAPACITOR 25V 0.1U	1	
C725	ECA1CXS100	E.CAPACITOR 16V 10U	1	
C726	ECA1HXNV4R7	E.CAPACITOR 50V 4.7U	1	
C727,28	ECUM1H103ZFN	C.CAPACITOR CH 50V 0.01U	2	
C729,30	ECUM1E104ZFN	C.CAPACITOR 25V 0.1U	2	
C731,32	ECA1HXLV2R2	E.CAPACITOR 50V 2.2U	2	
C733-42	ECUM1E104ZFN	C.CAPACITOR 25V 0.1U	10	
D101	MA3160-M	DIODE	1	
D102	1SZ53	DIODE	1	
D201	MA151K	DIODE	1	
D202	MA151WK	DIODE	1	
D401	MA157	DIODE	1	
D402,03	MA3051M	DIODE	2	
D405,06	MA151K	DIODE	2	

Ref.No.	Part No.	Part Name & Description	Pcs	Remarks
D701	MA157	DIODE	1	
D702-05	MA151K	DIODE	4	
FL101	VLF0901	FILTER	1	
IC101	AN78N09	IC	1	
IC102	AN79N09	IC	1	
IC103	NE5539D	IC	1	
IC104	NJM084M	IC	1	
IC105,06	NJM4560MD	IC	2	
IC108	TDC1038N6C	IC	1	
IC109	MC74HC574AF	IC	1	
IC110,11	MC10124L	IC	2	
IC113	TDC1038N6C	IC	1	
IC114	MC74HC574AF	IC	1	
IC201	AN78N09	IC	1	
IC202	AN91A12S	IC	1	
IC203,04	MM74HC221AM	IC	2	
IC205	SN74LS123NS	IC	1	
IC206	NJM311M	IC	1	
IC207	MC74HC00AF	IC	1	
IC208	NJM319M	IC	1	
IC209	NJM084M	IC	1	
IC210	MC74HC4053F	IC	1	
IC211	NJM082BM	IC	1	
IC212	AN78N05	IC	1	
IC213	CXD1175AM	IC	1	
IC214	UPC624C	IC	1	
IC215	NJM4558M	IC	1	
IC216	MC74HC574AF	IC	1	
IC217	MC74HC74AF	IC	1	
IC301,02	MC74HC138AF	IC	2	
IC303	MC74HC573AF	IC	1	
IC304,05	UPD71055GB	IC	2	
IC306	MC10124L	IC	1	
IC307	MC10104L	IC	1	
IC308	MC10125L	IC	1	
IC309	SN74AS244NS	IC	1	
IC310	SN74LS08NS	IC	1	
IC401	MC74HC4053F	IC	1	
IC402	NJM084M	IC	1	
IC403	AN78L05	IC	1	
IC404	MC74HC365F	IC	1	
IC405	NJM082BM	IC	1	
IC406	MC74HC04AF	IC	1	
IC407	AN78L05	IC	1	
IC408	SN74ALS574B	IC	1	
IC409	SN74S85NS	IC	1	
IC411	MC74HC74AF	IC	1	
IC412	SN74LS123NS	IC	1	
IC413	MC74HC4053F	IC	1	
IC502	VSI0878	IC	1	
IC503	ZR33891PQ-20	IC	1	
IC504	VSI0879B	IC	1	
IC505	HM63021P	IC	1	
IC507,08	SN74S85NS	IC	2	
IC509,10	MC74HC74AF	IC	2	
IC601	MN53015VZW	IC	1	
IC602	SN74LS221NS	IC	1	
IC603	MC74HC04AF	IC	1	
IC604	74F00SJ	IC	1	
IC605	UPD65022F210	IC	1	
IC606	AN78N09	IC	1	
IC607	UPC624C	IC	1	
IC608	NJM082BM	IC	1	
IC609	NJM319M	IC	1	
IC610	AN79N09	IC	1	
IC611	VSI0981B	IC	1	
IC701	SN74LS221NS	IC	1	
IC702-04	SN74AS109NS	IC	3	
IC706	MC74HC00AF	IC	1	

Ref.No.	Part No.	Part Name & Description	Pcs	Remarks
IC707	MC74HC86F	IC	1	
IC708	MC74HC163AF	IC	1	
IC709	NJM084M	IC	1	
IC710	NJM319M	IC	1	
IC711	MC14538BF	IC	1	
IC712	NJM084M	IC	1	
IC713	MC74HC74AF	IC	1	
IC714	MB40576P	IC	1	
IC715	MC74HC574AF	IC	1	
ICS108	VJS2577	CONNECTOR (FEMALE)	1	
ICS113	VJS2577	CONNECTOR (FEMALE)	1	
ICS502	VJS2575	CONNECTOR (FEMALE)	1	
ICS504	VJS2575	CONNECTOR (FEMALE)	1	
ICS611	VJS2575	CONNECTOR (FEMALE)	1	
L101-04	VLQEL05S220K	COIL 22UH	4	
L105	VLQEL05S821J	COIL 820UH	1	
L109	VLP0017	COIL	1	
L201	VLQEL05S221J	COIL 220UH	1	
L202	VLQEL05S220K	COIL 22UH	1	
L203	VLQEL05S680J	COIL 68UH	1	
L204	VLP0017	COIL	1	
L205-07	VLQEL05S220K	COIL 22UH	3	
L301,02	VLP0017	COIL	2	
L304-07	VLP0017	COIL	4	
L401-04	VLQEL05S220K	COIL 22UH	4	
L701,02	VLQEL05S220K	COIL 22UH	2	
P1	VJP1243T	CONNECTOR (MALE)	1	
P217,18	VJP3151	CONNECTOR (MALE)	2	
Q101	2SB709-R	TRANSISTOR	1	
Q102,03	2SD636	TRANSISTOR	2	
Q104	2SD601-R	TRANSISTOR	1	
Q105,06	2SC2295-B	TRANSISTOR	2	
Q107,08	2SA1022-B	TRANSISTOR	2	
Q109	2SD601-R	TRANSISTOR	1	
Q111	2SB793-R	TRANSISTOR	1	
Q112	2SK198-P	TRANSISTOR	1	
Q113	2SB641-R	TRANSISTOR	1	
Q114	2SB709-R	TRANSISTOR	1	
Q201,02	2SB709-R	TRANSISTOR	2	
Q401	2SD601-R	TRANSISTOR	1	
Q601	2SB709-R	TRANSISTOR	1	
Q701	2SD601-R	TRANSISTOR	1	
Q702	2SK301-PQR	TRANSISTOR	1	
Q703,04	2SC1216	TRANSISTOR	2	
Q705	2SD601-R	TRANSISTOR	1	
Q706	2SK301-PQR	TRANSISTOR	1	
Q707	UN2212	TRANSISTOR	1	
		RESISTORS		
R101	VRE0034E103	M.RESISTOR CH 1/10W 10K	1	
R102-05	VRE0034E222	M.RESISTOR CH 1/10W 2.2K	4	
R106	VRE0034E221	M.RESISTOR CH 1/10W 220	1	
R107	VRE0034E392	M.RESISTOR CH 1/10W 3.9K	1	
R108	VRE0034E221	M.RESISTOR CH 1/10W 220	1	
R109,10	VRE0034E750	M.RESISTOR CH 1/10W 75	2	
R111	VRE0034E122	M.RESISTOR CH 1/10W 1.2K	1	
R112,13	VRE0034E681	M.RESISTOR CH 1/10W 680	2	
R114	VRE0034E471	M.RESISTOR CH 1/10W 470	1	
R115	VRE0034E821	M.RESISTOR CH 1/10W 820	1	
R116	VRE0034E470	M.RESISTOR CH 1/10W 47	1	
R117	VRE0034E222	M.RESISTOR CH 1/10W 2.2K	1	
R118	VRE0034E470	M.RESISTOR CH 1/10W 47	1	
R119	VRE0034E102	M.RESISTOR CH 1/10W 1K	1	
R120	VRE0034E471	M.RESISTOR CH 1/10W 470	1	

Ref.No.	Part No.	Part Name & Description	Pcs	Remarks
R121	VRE0034E221	M.RESISTOR CH 1/10W 220	1	
R122	VRE0034E821	M.RESISTOR CH 1/10W 820	1	
R123,24	VRE0034E470	M.RESISTOR CH 1/10W 47	2	
R125	VRE0034E222	M.RESISTOR CH 1/10W 2.2K	1	
R126,27	VRE0034E122	M.RESISTOR CH 1/10W 1.2K	2	
R128	VRE0034E221	M.RESISTOR CH 1/10W 220	1	
R129	VRE0034E332	M.RESISTOR CH 1/10W 3.3K	1	
R130	VRE0034E100	M.RESISTOR CH 1/10W 10	1	
R131	VRE0034E101	M.RESISTOR CH 1/10W 100	1	
R132	VRE0034E102	M.RESISTOR CH 1/10W 1K	1	
R133	VRE0034E561	M.RESISTOR CH 1/10W 560	1	
R134	VRE0034E100	M.RESISTOR CH 1/10W 10	1	
R135	VRE0034E102	M.RESISTOR CH 1/10W 1K	1	
R137	VRE0034E101	M.RESISTOR CH 1/10W 100	1	
R139	VRE0034E102	M.RESISTOR CH 1/10W 1K	1	
R140	VRE0034E222	M.RESISTOR CH 1/10W 2.2K	1	
R141,42	VRE0034E105	M.RESISTOR CH 1/10W 1000K	2	
R143,44	VRE0034E101	M.RESISTOR CH 1/10W 100	2	
R145	VRE0034E102	M.RESISTOR CH 1/10W 1K	1	
R146	VRE0034E103	M.RESISTOR CH 1/10W 10K	1	
R147	VRE0034E432	M.RESISTOR CH 1/10W 4.3K	1	
R148	VRE0034E153	M.RESISTOR CH 1/10W 15K	1	
R149,50	VRE0034E102	M.RESISTOR CH 1/10W 1K	2	
R151	VRE0034E272	M.RESISTOR CH 1/10W 2.7K	1	
R152	VRE0034E152	M.RESISTOR CH 1/10W 1.5K	1	
R153	VRE0034E271	M.RESISTOR CH 1/10W 270	1	
R154,55	VRE0034E181	M.RESISTOR CH 1/10W 180	2	
R157-72	ERJ6GEYJ471	M.RESISTOR CH1/10W 470	16	
R189	VRE0034E822	M.RESISTOR CH 1/10W 8.2K	1	
R190	VRE0034E123	M.RESISTOR CH 1/10W 12K	1	
R191	VRE0034E104	M.RESISTOR CH 1/10W 100K	1	
R192	VRE0034E683	M.RESISTOR CH 1/10W 63K	1	
R193	VRE0034E302	M.RESISTOR CH 1/10W 3K	1	
R194	VRE0034E242	M.RESISTOR CH 1/10W 2.4K	1	
R195	ERJ6GEY0R00	C.RESISTOR 1/10W 0	1	
R203	ERJ6GEYJ221	M.RESISTOR CH1/10W 220	1	
R204-06	ERJ6GEYJ222	M.RESISTOR CH1/10W 2.2K	3	
R207	ERJ6GEYJ332	M.RESISTOR CH1/10W 3.3K	1	
R208,09	ERJ6GEYJ822	M.RESISTOR CH1/10W 8.2K	2	
R210	ERJ6GEYJ103	M.RESISTOR CH1/10W 10K	1	
R211	ERJ6GEYJ684	M.RESISTOR CH1/10W 680K	1	
R212	ERJ6GEYJ104	M.RESISTOR CH1/10W 100K	1	
R213	ERJ6GEYF333	M.RESISTOR CH1/10W 33K	1	
R214	ERJ6GEYG153	M.RESISTOR CH1/10W 15K	1	
R215	VRE0034E303	M.RESISTOR CH 1/10W 30K	1	
R216	ERJ6GEYJ393	M.RESISTOR CH1/10W 39K	1	
R217	ERJ6GEYF124	M.RESISTOR CH1/10W 120K	1	
R218	ERJ6GEYJ102	M.RESISTOR CH1/10W 1K	1	
R219	ERJ6GEYJ103	M.RESISTOR CH1/10W 10K	1	
R220	ERJ6GEYJ560	M.RESISTOR CH1/10W 56	1	
R221	ERJ6GEYJ102	M.RESISTOR CH1/10W 1K	1	
R222	ERJ6GEYJ223	M.RESISTOR CH1/10W 22K	1	
R223	ERJ6GEYF124	M.RESISTOR CH1/10W 120K	1	
R224	ERJ6GEYJ103	M.RESISTOR CH1/10W 10K	1	
R225	ERJ6GEYF472	M.RESISTOR CH1/10W 4.7K	1	
R226	ERJ6GEYJ563	M.RESISTOR CH1/10W 56K	1	
R227	ERJ6GEYJ105	M.RESISTOR CH1/10W 1M	1	
R228	ERJ6GEYJ103	M.RESISTOR CH1/10W 10K	1	
R229	ERJ6GEYJ105	M.RESISTOR CH1/10W 1M	1	
R230	ERJ6GEYJ122	M.RESISTOR CH1/10W 1.2K	1	
R231	ERJ6GEYJ222	M.RESISTOR CH1/10W 2.2K	1	
R232	ERJ6GEYJ220	M.RESISTOR CH1/10W 22	1	
R233	ERJ6GEYJ620	M.RESISTOR CH1/10W 62	1	
R234-49	ERJ6GEYJ101	M.RESISTOR CH1/10W 100	16	
R250	ERJ6GEYJ822	M.RESISTOR CH1/10W 8.2K	1	
R251	ERJ6GEYF472	M.RESISTOR CH1/10W 4.7K	1	
R252	ERJ6GEYJ822	M.RESISTOR CH1/10W 8.2K	1	
R253	ERJ6GEYF472	M.RESISTOR CH1/10W 4.7K	1	
R254	ERJ6GEYJ101	M.RESISTOR CH1/10W 100	1	
R255	ERJ6GEYJ103	M.RESISTOR CH1/10W 10K	1	
R256	ERJ6GEYG153	M.RESISTOR CH1/10W 15K	1	
R257	ERJ6GEYJ104	M.RESISTOR CH1/10W 100K	1	
R258	ERJ6GEYJ221	M.RESISTOR CH1/10W 220	1	
R301-12	ERJ6GEYJ471	M.RESISTOR CH1/10W 470	12	
R313-16	ERJ6GEYJ101	M.RESISTOR CH1/10W 100	4	

M1

M1 DRIVE VEP82068A

M1 SUB 1 VEP82086A

Ref.No.	Part No.	Part Name & Description	Pcs	Remarks
R317,18	ERJ6GEYJ330	M.RESISTOR CH1/10W 33	2	
R401	ERJ6GEYJ682	M.RESISTOR CH1/10W 6.8K	1	
R402	ERJ6GEYJ222	M.RESISTOR CH1/10W 2.2K	1	
R403	ERJ6GEYJ103	M.RESISTOR CH1/10W 10K	1	
R404	ERJ6GEYJ821	M.RESISTOR CH1/10W 820	1	
R405	ERJ6GEYJ473	M.RESISTOR CH1/10W 47K	1	
R406	ERJ6GEYJ103	M.RESISTOR CH1/10W 10K	1	
R407	ERJ6GEYJ105	M.RESISTOR CH1/10W 1M	1	
R408	ERJ6GEYJ223	M.RESISTOR CH1/10W 22K	1	
R409	ERJ6GEYJ122	M.RESISTOR CH1/10W 1.2K	1	
R410	ERJ6GEYJ222	M.RESISTOR CH1/10W 2.2K	1	
R411	ERJ6GEYJ102	M.RESISTOR CH1/10W 1K	1	
R412,13	ERJ6GEYJ103	M.RESISTOR CH1/10W 10K	2	
R414,15	ERJ6GEYJ223	M.RESISTOR CH1/10W 22K	2	
R416	ERJ6GEYJ105	M.RESISTOR CH1/10W 1M	1	
R417	ERJ6GEYJ103	M.RESISTOR CH1/10W 10K	1	
R418	ERJ6GEYJ224	M.RESISTOR CH1/10W 220K	1	
R419	ERJ6GEYJ682	M.RESISTOR CH1/10W 6.8K	1	
R501-04	ERJ6GEYJ103	M.RESISTOR CH1/10W 10K	4	
R505	ERJ6GEY0R00	C.RESISTOR 1/10W 0	1	
R601	ERJ6GEYJ331	M.RESISTOR CH1/10W 330	1	
R602,03	ERJ6GEYJ103	M.RESISTOR CH1/10W 10K	2	
R604	ERJ6GEY0R00	C.RESISTOR 1/10W 0	1	
R606-08	ERJ6GEYJ103	M.RESISTOR CH1/10W 10K	3	
R609,10	ERJ6GEY0R00	C.RESISTOR 1/10W 0	2	
R611	ERJ6GEYJ682	M.RESISTOR CH1/10W 6.8K	1	
R612	ERJ6GEYJ273	M.RESISTOR CH1/10W 27K	1	
R613	ERJ6GEYJ103	M.RESISTOR CH1/10W 10K	1	
R614	ERJ6GEY0R00	C.RESISTOR 1/10W 0	1	
R617	ERJ6GEYJ103	M.RESISTOR CH1/10W 10K	1	
R618-25	ERJ6GEYJ101	M.RESISTOR CH1/10W 100	8	
R626	ERJ6GEYJ183	M.RESISTOR CH1/10W 18K	1	
R627	ERJ6GEYF333	M.RESISTOR CH1/10W 33K	1	
R628,29	ERJ6GEYJ103	M.RESISTOR CH1/10W 10K	2	
R630	ERJ6GEYJ272	M.RESISTOR CH1/10W 2.7K	1	
R631	ERJ6GEYJ562	M.RESISTOR CH1/10W 5.6K	1	
R632	ERJ6GEYJ222	M.RESISTOR CH1/10W 2.2K	1	
R633,34	ERJ6GEYJ101	M.RESISTOR CH1/10W 100	2	
R635	ERJ6GEYJ681	M.RESISTOR CH1/10W 680	1	
R637	ERJ6GEYJ222	M.RESISTOR CH1/10W 2.2K	1	
R638	ERJ6GEYJ101	M.RESISTOR CH1/10W 100	1	
R639,40	ERJ6GEYF472	M.RESISTOR CH1/10W 4.7K	2	
R641	ERJ6GEYJ562	M.RESISTOR CH1/10W 5.6K	1	
R701	ERJ6GEYJ123	M.RESISTOR CH1/10W 12K	1	
R703	ERJ6GEY0R00	C.RESISTOR 1/10W 0	1	
R705	ERJ6GEY0R00	C.RESISTOR 1/10W 0	1	
R709,10	ERJ6GEY0R00	C.RESISTOR 1/10W 0	2	
R711	ERJ6GEYJ102	M.RESISTOR CH1/10W 1K	1	
R712	ERJ6GEYJ104	M.RESISTOR CH1/10W 100K	1	
R713	ERJ6GEYG153	M.RESISTOR CH1/10W 15K	1	
R714	ERJ6GEYJ103	M.RESISTOR CH1/10W 10K	1	
R715	ERJ6GEYJ102	M.RESISTOR CH1/10W 1K	1	
R716	ERJ6GEYJ562	M.RESISTOR CH1/10W 5.6K	1	
R717	ERJ6GEYJ103	M.RESISTOR CH1/10W 10K	1	
R718	VRE0034E821	M.RESISTOR CH 1/10W 820	1	
R719	VRE0034E392	M.RESISTOR CH 1/10W 3.9K	1	
R720	VRE0034E103	M.RESISTOR CH 1/10W 10K	1	
R721	ERJ6GEYJ104	M.RESISTOR CH1/10W 100K	1	
R722	ERJ6GEYG153	M.RESISTOR CH1/10W 15K	1	
R723	ERJ6GEYJ103	M.RESISTOR CH1/10W 10K	1	
R724,25	ERJ6GEYJ105	M.RESISTOR CH1/10W 1M	2	
R726	ERJ6GEYJ563	M.RESISTOR CH1/10W 56K	1	
R727,28	ERJ6GEYJ562	M.RESISTOR CH1/10W 5.6K	2	
R729	ERJ6GEYJ102	M.RESISTOR CH1/10W 1K	1	
R730	ERJ6GEYJ223	M.RESISTOR CH1/10W 22K	1	
R731,32	ERJ6GEYJ824	M.RESISTOR CH1/10W 820K	2	
R733	ERJ6GEYJ103	M.RESISTOR CH1/10W 10K	1	
R734	VRE0034E202	M.RESISTOR CH 1/10W 2K	1	
R735	VRE0034E162	M.RESISTOR CH 1/10W 1.6K	1	
R736	ERJ6GEYJ822	M.RESISTOR CH1/10W 8.2K	1	
R737	VRE0034E202	M.RESISTOR CH 1/10W 2K	1	
R738	ERJ6GEYJ222	M.RESISTOR CH1/10W 2.2K	1	
R739	ERJ6GEYJ152	M.RESISTOR CH1/10W 1.5K	1	
R740	ERJ6GEYJ102	M.RESISTOR CH1/10W 1K	1	
R741	ERJ6GEYJ391	M.RESISTOR CH1/10W 390	1	

M1 SUB 2 VEP82103A

Ref.No.	Part No.	Part Name & Description	Pcs	Remarks
SW501	VSS0184	SWITCH	1	
SW701	VJP1940	CONNECTOR (MALE)	1	
SWS701	VJS1940	CONNECTOR (FEMALE)	1	
TH1	ERTD2FHL103S	THERMISTOR	1	
TH2	ERTD2FGL601S	THERMISTOR	1	
TH601	ERTD2FFL102S	THERMISTOR	1	
TP101	VJR0646	TEST POINT	1	
TP103	VJR0646	TEST POINT	1	
TP201-03	VJR0646	TEST POINT	3	
TP401-04	VJR0646	TEST POINT	4	
TP601	VJR0646	TEST POINT	1	
TP701-10	VJR0646	TEST POINT	10	
TPG1-G3	VJR0646	TEST POINT	3	
TPG5,G6	VJR0646	TEST POINT	2	
VR101	VRV0109B501	V.RESISTOR 500	1	
VR102	VRV0109B102	V.RESISTOR 1K	1	
VR103	VRV0109B101	V.RESISTOR 100	1	
VR201	VRV0109B202	V.RESISTOR 2K	1	
VR202	VRV0109B201	V.RESISTOR 200	1	
VR401	VRV0109B503	V.RESISTOR 50K	1	
VR601,02	VRV0109B103	V.RESISTOR 10K	2	
VR701	VRV0109B103	V.RESISTOR 10K	1	
VR702	VRV0109B502	V.RESISTOR 5K	1	
VR703,04	VRV0109B103	V.RESISTOR 10K	2	
VR705,06	VRV0109B202	V.RESISTOR 2K	2	
X401	VSX0567A	CRYSTAL OSCILLATOR	1	
X402	VSX0338	CRYSTAL OSCILLATOR	1	
		MISCELLANEOUS		
	VGQ0291	P.C.BOARD NAME PLATE	1	
	VML2143	CARD PULLER	1	
	VML2144	6CARD PULLER	1	
	VSC3335	SHIELD CASE	1	
	VXA4420	P.C.BOARD SHIELD PLATE	1	
	XNG26E	NUT	4	
	XTV3+6FFR	SCFREW	5	
	XYN26+C12	SCREW	4	
	VEP82068A	P.C.BOARD W/COMPONENT		
		M1 DRIVE		
	VEP82086A	P.C.BOARD W/COMPONENT		FOR VEP82068A
		M1 SUB 1		
	VEP82103A	P.C.BOARD W/COMPONENT		FOR VEP82068A
		M1 SUB 2		
		CAPACITORS		
C337,38	ECQB1H104JF	P.CAPACITOR 50V 0.1U	2	
C2301-03	ECA1CXLV470	E.CAPACITOR 16V 47U	3	
C2304	ECA1HXLV101X	E.CAPACITOR 50V 100U	1	
C2304	ECA1HXLV101X	E.CAPACITOR 50V 100U	1	
C2305,06	ECEA1HGE471	E.CAPACITOR 50V 470U	2	
C2307	ECA1HXLV101X	E.CAPACITOR 50V 100U	1	

Ref.No.	Part No.	Part Name & Description	Pcs	Remarks
C2308,09	ECEA1HGE471	E.CAPACITOR 50V 470U	2	
C2313	ECUM1H561JN	C.CAPACITOR CH 50V 560P	1	
C2314	ECQB1H103JF	P.CAPACITOR 50V 0.01U	1	
C2315	ECA1CXLV470	E.CAPACITOR 16V 47U	1	
C2316	ECUM1H102JCN	C.CAPACITOR CH 50V 1000P	1	
C2320	ECA1HXLV470X	E.CAPACITOR 50V 47U	1	
C2321	ECEA1HGE471	E.CAPACITOR 50V 470U	1	
C2323-25	ECUM1H103KBN	C.CAPACITOR CH 50V 0.01U	3	
C2328	ECUM1H104ZFN	C.CAPACITOR CH 50V 0.1U	1	
C2330	ECUM1H102JCN	C.CAPACITOR CH 50V 1000P	1	
C2332	ECUM1H104ZFN	C.CAPACITOR CH 50V 0.1U	1	
C2333-35	ECUM1H102JCN	C.CAPACITOR CH 50V 1000P	3	
C2336	ECA1HXLV4R7	E.CAPACITOR 50V 4.7U	1	
C2339	ECA1HXSR47	E.CAPACITOR 50V 0.47U	1	
C2340	ECA1CXLV470	E.CAPACITOR 16V 47U	1	
C2341-43	ECA1HXNV4R7	E.CAPACITOR 50V 4.7U	3	
C2344-46	ECUM1H103KBN	C.CAPACITOR CH 50V 0.01U	3	
C2348-55	ECUM1H104ZFN	C.CAPACITOR CH 50V 0.1U	8	
C2360	ECA1CXLV470	E.CAPACITOR 16V 47U	1	
C2361,62	ECUM1H104ZFN	C.CAPACITOR CH 50V 0.1U	2	
C2364	ECUM1H123KBN	C.CAPACITOR CH 50V 0.012U	1	
C2365	ECA1HXLV220	E.CAPACITOR 50V 22U	1	
C2368	ECUM1H102KBN	C.CAPACITOR CH 50V 1000P	1	
C2369-77	ECUM1H104ZFN	C.CAPACITOR CH 50V 0.1U	9	
C2378	ECA1HXLV100	E.CAPACITOR 50V 10U	1	
C2380	ECUM1H123KBN	C.CAPACITOR CH 50V 0.012U	1	
C2381	ECA1HXLV100	E.CAPACITOR 50V 10U	1	
C2382-90	ECUM1H104ZFN	C.CAPACITOR CH 50V 0.1U	9	
C2391	ECUM1H102KBN	C.CAPACITOR CH 50V 1000P	1	
C2394	ECA1HXLV220	E.CAPACITOR 50V 22U	1	
C2395-98	ECUM1H104ZFN	C.CAPACITOR CH 50V 0.1U	4	
C2401	ECUM1H103KBN	C.CAPACITOR CH 50V 0.01U	1	
C2402	ECUM1H102JCN	C.CAPACITOR CH 50V 1000P	1	
C2405	ECUM1H103ZFN	C.CAPACITOR CH 50V 0.01U	1	
C2411-16	ECA1HXLV4R7	E.CAPACITOR 50V 4.7U	6	
C2421-23	ECUM1H473ZFN	C.CAPACITOR CH 50V 0.047U	3	
C2440,41	ECKF1H122KB	C.CAPACITOR 50V 1200P	2	
C2501	ECA1EXS330	E.CAPACITOR 25V 33U	1	
C2502	ECUM1H104ZFN	C.CAPACITOR CH 50V 0.1U	1	
C2503-06	ECA1HXNV2R2	E.CAPACITOR 50V 2.2U	4	
C2507-11	ECA1HXNVR22	E.CAPACITOR 50V 0.22U	5	
C2512	ECA1EXS330	E.CAPACITOR 25V 33U	1	
C2513-21	ECUM1H103ZFN	C.CAPACITOR CH 50V 0.01U	9	
C2523,24	ECKF1H562KB	C.CAPACITOR 50V 5600P	2	
D2301	31DQ06	DIODE	1	
D2302	21DQ04	DIODE	1	
D2303,04	31DQ06	DIODE	2	
D2308,09	MA3150-M	DIODE	2	
D2310	MA151WK	DIODE	1	
D2311	MA151K	DIODE	1	
D2312	MA153	DIODE	1	
D2313	MA3110-M	DIODE	1	
D2314	MA3150-M	DIODE	1	
D2315	MA153	DIODE	1	
D2320-31	10E1	DIODE	12	
D2361	0A95	DIODE	1	
D2501	MA4120-M	DIODE	1	
D2502	MA4056-M	DIODE	1	
D2503	MA4043M	DIODE	1	
D2504	MA4100M	DIODE	1	
D2505	MA4082M	DIODE	1	
D2506	MA4100M	DIODE	1	
D2507	MA4039-M	DIODE	1	
IC1	NJM2904M	IC	1	
IC2301	NJM2902M	IC	1	
IC2302	TA7712F	IC	1	
IC2304	NJM2903M	IC	1	
IC2305,06	TL1451CNS	IC	2	
IC2307	AN3821K	IC	1	

Ref.No.	Part No.	Part Name & Description	Pcs	Remarks
IC2308	UPA1453H	IC	1	
IC2309	MP6901	IC	1	
IC2310	MC14053BF	IC	1	
IC2311,12	TA7712F	IC	2	
IC2315	TL084CNS	IC	1	
IC2316	UPC393G2	IC	1	
IC2317	MC14053BF	IC	1	
IC2318	TL082CPS	IC	1	
IC2501,02	BA6238AU2M	IC	2	
IC2503-05	PU4124	POWER TRANSISTOR	3	
IC2506-08	MC14538BF	IC	3	
IC2509,10	MC14081BF	IC	2	
IC2511,12	MC14050BF	IC	2	
IC2513	MC14073BF	IC	1	
IC2514	MC14049UBF	IC	1	
L2301-03	VLQ0128	COIL	3	
L2304,05	VLQ0214	COIL	2	
L2306	VLQ0497	COIL	1	
L2307	VLQ0504561K	COIL 560U	1	
L2308,09	VLQ0497	COIL	2	
L2315	VLQ0128	COIL	1	
L2501	VLP0017	COIL	1	
L2502	VLQ0214	COIL	1	
P2101	VJP3097B040	CONNECTOR (MALE)	1	
P2102	VJP3098B034	CONNECTOR (MALE)	1	
P2103	VJP3098B032	CONNECTOR (MALE)	1	
P2104	VJP1154	CONNECTOR (MALE)	1	
Q2301-04	2SB644	TRANSISTOR	4	
Q2305	UN2213	TRANSISTOR	1	
Q2307	2SD637-Q	TRANSISTOR	1	
Q2308	2SB942A-Q	TRANSISTOR	1	
Q2309	2SB642	TRANSISTOR	1	
Q2310-12	2SC829	TRANSISTOR	3	
Q2313	2SB944-Q	TRANSISTOR	1	
Q2316	2SB709-R	TRANSISTOR	1	
Q2320	2SC1685	TRANSISTOR	1	
Q2321	2SB942A-Q	TRANSISTOR	1	
Q2322	2SB642	TRANSISTOR	1	
Q2323	UN2210	TRANSISTOR	1	
Q2324-26	2SC829	TRANSISTOR	3	
Q2327	2SC1685	TRANSISTOR	1	
Q2328-30	2SC829	TRANSISTOR	3	
Q2331	2SB942A-Q	TRANSISTOR	1	
Q2332	2SB642	TRANSISTOR	1	
Q2340-42	2SB951A-Q	TRANSISTOR	3	
Q2343-45	2SD1277A-Q	TRANSISTOR	3	
Q2346-48	2SB951A-Q	TRANSISTOR	3	
Q2349-51	2SD1277A-Q	TRANSISTOR	3	
Q2361-63	2SA1022-B	TRANSISTOR	3	
Q2501-07	UN2213	TRANSISTOR	7	
		RESISTORS		
R418	VRE0034E103	M.RESISTOR CH 1/10W 10K	1	
R484	VRE0034E152	M.RESISTOR CH 1/10W 1.5K	1	
R485	VRE0034E102	M.RESISTOR CH 1/10W 1K	1	
R486	VRE0034E152	M.RESISTOR CH 1/10W 1.5K	1	
R487	VRE006605102	M.RESISTOR 1K	1	
R2301-04	ERDS2TJ222	C.RESISTOR 1/4W 2.2K	4	
R2305-08	ERDS2TJ152	C.RESISTOR 1/4W 1.5K	4	
R2309-12	ERDS2TJ390	C.RESISTOR 1/4W 39	4	
R2314	ERJ6GEYJ103	M.RESISTOR CH1/10W 10K	1	
R2315	ERJ6GEYF472	M.RESISTOR CH1/10W 4.7K	1	
R2316,17	ERJ6GEYJ103	M.RESISTOR CH1/10W 10K	2	
R2318	ERJ6GEYJ105	M.RESISTOR CH1/10W 1M	1	

REC AMP

REC AMP VEP85023B

REC AMP SUB 1 VEP85046A

Ref.No.	Part No.	Part Name & Description	Pcs	Remarks
R2319	ERJ6GEYF333	M.RESISTOR CH1/10W 33K	1	
R2320	ERJ6GEYJ103	M.RESISTOR CH1/10W 10K	1	
R2321	ERJ6GEYF333	M.RESISTOR CH1/10W 33K	1	
R2322	ERJ6GEYJ332	M.RESISTOR CH1/10W 3.3K	1	
R2323	ERJ6GEYJ103	M.RESISTOR CH1/10W 10K	1	
R2324	ERJ6GEYJ272	M.RESISTOR CH1/10W 2.7K	1	
R2325,26	ERJ6GEYJ103	M.RESISTOR CH1/10W 10K	2	
R2327	ERG1SJ821	M.RESISTOR 1W 820	1	
R2328	ERJ6GEYJ223	M.RESISTOR CH1/10W 22K	1	
R2329	ERJ6GEYJ103	M.RESISTOR CH1/10W 10K	1	
R2330	ERJ6GEYJ104	M.RESISTOR CH1/10W 100K	1	
R2331-34	ERJ6GEYJ103	M.RESISTOR CH1/10W 10K	4	
R2335-40	ERJ6GEYJ122	M.RESISTOR CH1/10W 1.2K	6	
R2341	ERX3SG1R0	M.RESISTOR 3W 1.0	1	
R2342-45	ERJ6GEYJ123	M.RESISTOR CH1/10W 12K	4	
R2346	ERJ6GEYJ563	M.RESISTOR CH1/10W 56K	1	
R2347	ERJ6GEYG153	M.RESISTOR CH1/10W 15K	1	
R2348	ERJ6GEYJ563	M.RESISTOR CH1/10W 56K	1	
R2349-52	ERJ6GEYJ123	M.RESISTOR CH1/10W 12K	4	
R2353	ERJ6GEYJ563	M.RESISTOR CH1/10W 56K	1	
R2354	ERJ6GEYG153	M.RESISTOR CH1/10W 15K	1	
R2355	ERJ6GEYJ563	M.RESISTOR CH1/10W 56K	1	
R2356	ERJ6GEYJ562	M.RESISTOR CH1/10W 5.6K	1	
R2367	ERJ6GEYJ103	M.RESISTOR CH1/10W 10K	1	
R2368	ERJ6GEYJ104	M.RESISTOR CH1/10W 100K	1	
R2369	ERJ6GEYJ272	M.RESISTOR CH1/10W 2.7K	1	
R2370	ERJ6GEYJ103	M.RESISTOR CH1/10W 10K	1	
R2371	ERJ6GEYJ392	M.RESISTOR CH1/10W 3.9K	1	
R2372	ERJ6GEYJ223	M.RESISTOR CH1/10W 22K	1	
R2373-75	ERJ6GEYJ224	M.RESISTOR CH1/10W 220K	3	
R2376	ERX12SJR68	M.RESISTOR 1/2W 0.68	1	
R2377	ERJ6GEYJ272	M.RESISTOR CH1/10W 2.7K	1	
R2378	ERJ6GEYJ103	M.RESISTOR CH1/10W 10K	1	
R2379	ERJ6GEYG153	M.RESISTOR CH1/10W 15K	1	
R2380,81	VRE0034E103	M.RESISTOR CH 1/10W 10K	2	
R2382	ERJ6GEYF472	M.RESISTOR CH1/10W 4.7K	1	
R2383,84	ERJ6GEYJ103	M.RESISTOR CH1/10W 10K	2	
R2385	ERJ6GEYJ105	M.RESISTOR CH1/10W 1M	1	
R2386	ERJ6GEYJ562	M.RESISTOR CH1/10W 5.6K	1	
R2387,88	VRE0034E103	M.RESISTOR CH 1/10W 10K	2	
R2389	ERJ6GEYJ332	M.RESISTOR CH1/10W 3.3K	1	
R2390	VRE0034E103	M.RESISTOR CH 1/10W 10K	1	
R2391	ERJ6GEYJ473	M.RESISTOR CH1/10W 47K	1	
R2392	VRE0034E103	M.RESISTOR CH 1/10W 10K	1	
R2393	ERJ6GEYJ562	M.RESISTOR CH1/10W 5.6K	1	
R2394	ERJ6GEYJ563	M.RESISTOR CH1/10W 56K	1	
R2395	ERJ6GEYJ103	M.RESISTOR CH1/10W 10K	1	
R2396	ERDS2TJ3R3	C.RESISTOR 1/4W 3.3	1	
R2397	ERG1SJ391	M.RESISTOR 1W 390	1	
R2398	ERJ6GEYJ223	M.RESISTOR CH1/10W 22K	1	
R2399	ERJ6GEYJ103	M.RESISTOR CH1/10W 10K	1	
R2400	ERJ6GEYJ104	M.RESISTOR CH1/10W 100K	1	
R2401	ERJ6GEYJ103	M.RESISTOR CH1/10W 10K	1	
R2402-07	ERJ6GEYJ122	M.RESISTOR CH1/10W 1.2K	6	
R2408	ERX3SG1R0	M.RESISTOR 3W 1.0	1	
R2409	ERJ6GEYJ104	M.RESISTOR CH1/10W 100K	1	
R2410	VRE0034E103	M.RESISTOR CH 1/10W 10K	1	
R2411	ERJ6GEYF472	M.RESISTOR CH1/10W 4.7K	1	
R2412	VRE0034E103	M.RESISTOR CH 1/10W 10K	1	
R2413,14	ERJ6GEYJ103	M.RESISTOR CH1/10W 10K	2	
R2415	ERJ6GEYJ105	M.RESISTOR CH1/10W 1M	1	
R2416	ERJ6GEYJ562	M.RESISTOR CH1/10W 5.6K	1	
R2417	VRE0034E103	M.RESISTOR CH 1/10W 10K	1	
R2419	ERJ6GEYJ332	M.RESISTOR CH1/10W 3.3K	1	
R2420,21	VRE0034E103	M.RESISTOR CH 1/10W 10K	2	
R2422	ERJ6GEYJ562	M.RESISTOR CH1/10W 5.6K	1	
R2423	ERJ6GEYJ563	M.RESISTOR CH1/10W 56K	1	
R2424	ERJ6GEYJ103	M.RESISTOR CH1/10W 10K	1	
R2425	ERG1SJ561	M.RESISTOR 1W 560	1	
R2426	ERJ6GEYJ223	M.RESISTOR CH1/10W 22K	1	
R2427	ERJ6GEYJ103	M.RESISTOR CH1/10W 10K	1	
R2428	ERJ6GEYJ104	M.RESISTOR CH1/10W 100K	1	
R2429	ERJ6GEYJ103	M.RESISTOR CH1/10W 10K	1	
R2430	ERDS2TJ3R3	C.RESISTOR 1/4W 3.3	1	
R2431-36	ERJ6GEYJ122	M.RESISTOR CH1/10W 1.2K	6	

REC AMP SUB 2 VEP85047A

Ref.No.	Part No.	Part Name & Description	Pcs	Remarks
R2437	ERJ6GEYJ104	M.RESISTOR CH1/10W 100K	1	
R2438	ERX3SG1R0	M.RESISTOR 3W 1.0	1	
R2439-42	ERJ6GEYJ331	M.RESISTOR CH1/10W 330	4	
R2451-56	ERJ6GEYJ223	M.RESISTOR CH1/10W 22K	6	
R2457	ERJ6GEYF472	M.RESISTOR CH1/10W 4.7K	1	
R2458-63	ERJ6GEYJ223	M.RESISTOR CH1/10W 22K	6	
R2464	ERJ6GEYF472	M.RESISTOR CH1/10W 4.7K	1	
R2465-76	ERJ6GEYJ102	M.RESISTOR CH1/10W 1K	12	
R2477	ERJ6GEYJ100	M.RESISTOR CH1/10W 10	1	
R2481-83	ERJ6GEYG153	M.RESISTOR CH1/10W 15K	3	
R2501,02	ERDS2TJ102	C.RESISTOR 1/4W 1K	2	
R2503-10	ERJ6GEYJ104	M.RESISTOR CH1/10W 100K	8	
R2511-15	ERJ6GEYJ105	M.RESISTOR CH1/10W 1M	5	
R2516-25	ERJ6GEYJ681	M.RESISTOR CH1/10W 680	10	
R2526	ERJ6GEYJ104	M.RESISTOR CH1/10W 100K	1	
R2527	ERJ6GEYJ105	M.RESISTOR CH1/10W 1M	1	
R2528-31	ERJ6GEYJ104	M.RESISTOR CH1/10W 100K	4	
R2532-37	ERJ6GEYJ103	M.RESISTOR CH1/10W 10K	6	
R2538,39	ERJ6GEYJ123	M.RESISTOR CH1/10W 12K	2	
R2550	ERX1SJ2R2	M.RESISTOR 1W 2.2	1	
TP2305	VJR0646	TEST POINT	1	
TP2316	VJR0646	TEST POINT	1	
TP2324-37	VJR0646	TEST POINT	14	
TP2339-42	VJR0646	TEST POINT	4	
TPG1,G2	VJR0646	TEST POINT	2	
		MISCELLANEOUS		
	VJF0300	BINDER	3	
	VMB2318	SPRING	1	
	VMP3034	P.C.BOARD HOLDER ANGLE	1	
	VMP3087	P.C.BOARD HOLDER ANGLE	1	
	VSC3326	SHIELD CASE	2	
	VSC3367	SHIELD CASE	1	
	VXA4419	P.C.BOARD SHIELD PLATE	1	
	XNG3CS	NUT	12	
	XTV3+6FFR	SCREW	5	
	XYNV3+K8S	SCREW	3	
	XYN3+C8S	SCREW	2	
	XYN3+F10S	SCREW	16	
	VJR0421	PIN	6	
	VJR0133	PIN	4	
	VEP85023B	P.C.BOARD W/COMPONENT		
		REC AMP		
	VEP85046A	P.C.BOARD W/COMPONENT		FOR VEP85023B
		REC AMP SUB 1		
	VEP85047A	P.C.BOARD W/COMPONENT		FOR VEP85023B
		REC AMP SUB 2		
		CAPACITORS		
C1-C9	ECUM1E104ZFN	C.CAPACITOR 25V 0.1U	9	
C10-15	ECUM1E104ZFN	C.CAPACITOR 25V 0.1U	6	
C18-21	ECA1HXLV100	E.CAPACITOR 50V 10U	4	
C22-25	ECUM1E104ZFN	C.CAPACITOR 25V 0.1U	4	
C26,27	ECUM1H470JCN	C.CAPACITOR CH 50V 47P	2	
C28-31	ECUM1E104ZFN	C.CAPACITOR 25V 0.1U	4	
C32	ECUM1H102KBN	C.CAPACITOR CH 50V 1000P	1	
C33	ECUM1H101JCN	C.CAPACITOR CH 50V 100P	1	
C34-39	ECUM1E104ZFN	C.CAPACITOR 25V 0.1U	6	
C40	ECUM1H102KBN	C.CAPACITOR CH 50V 1000P	1	
C41-46	ECUM1E104ZFN	C.CAPACITOR 25V 0.1U	6	
C48-53	ECUM1E104ZFN	C.CAPACITOR 25V 0.1U	6	
C55	ECUM1E104ZFN	C.CAPACITOR 25V 0.1U	1	
C58,59	ECA1HXLV100	E.CAPACITOR 50V 10U	2	

Ref.No.	Part No.	Part Name & Description	Pcs	Remarks
C62-65	ECUM1E104ZFN	C.CAPACITOR 25V 0.1U	4	
C66,67	ECUM1H470JCN	C.CAPACITOR CH 50V 47P	2	
C68,69	ECUM1E104ZFN	C.CAPACITOR 25V 0.1U	2	
C72	ECUM1H102KBN	C.CAPACITOR CH 50V 1000P	1	
C73	ECUM1H101JCN	C.CAPACITOR CH 50V 100P	1	
C74-77	ECUM1E104ZFN	C.CAPACITOR 25V 0.1U	4	
C80	ECUM1H102KBN	C.CAPACITOR CH 50V 1000P	1	
C83	ECA1HXLV100	E.CAPACITOR 50V 10U	1	
C85-88	ECUM1E104ZFN	C.CAPACITOR 25V 0.1U	4	
C89-92	ECUM1H470JCN	C.CAPACITOR CH 50V 47P	4	
C93-99	ECUM1H101JCN	C.CAPACITOR CH 50V 100P	7	
C100	ECUM1H101JCN	C.CAPACITOR CH 50V 100P	1	
C101	ECA1CXLV101	E.CAPACITOR 16V 100U	1	
C102	ECA1HXLV330	E.CAPACITOR 50V 33U	1	
C103,04	ECUM1H332KBN	C.CAPACITOR CH 50V 3300P	2	
C105,06	ECUM1H103ZFN	C.CAPACITOR CH 50V 0.01U	2	
C200-03	ECUM1E104ZFN	C.CAPACITOR 25V 0.1U	4	
C204	ECUM1H050DCN	C.CAPACITOR CH 50V 5P	1	
C205-07	ECUM1E104ZFN	C.CAPACITOR 25V 0.1U	3	
C208	ECUM1H050DCN	C.CAPACITOR CH 50V 5P	1	
C209-14	ECUM1E104ZFN	C.CAPACITOR 25V 0.1U	6	
C215,16	ECUM1H221JCN	C.CAPACITOR CH 50V 220P	2	
C221	ECUM1E104ZFN	C.CAPACITOR 25V 0.1U	1	
C222	ECA1HXLV100	E.CAPACITOR 50V 10U	1	
C223,24	ECUM1E104ZFN	C.CAPACITOR 25V 0.1U	2	
C225	ECA1HXLV100	E.CAPACITOR 50V 10U	1	
C226,27	ECUM1E104ZFN	C.CAPACITOR 25V 0.1U	2	
C228	ECUM1H682KBN	C.CAPACITOR CH 50V 6800P	1	
C229	ECUM1E104ZFN	C.CAPACITOR 25V 0.1U	1	
C231	ECUM1E104ZFN	C.CAPACITOR 25V 0.1U	1	
C232	ECUM1H102KBN	C.CAPACITOR CH 50V 1000P	1	
C234-36	ECUM1E104ZFN	C.CAPACITOR 25V 0.1U	3	
C237	ECUM1H220JCN	C.CAPACITOR CH 50V 22P	1	
C238,39	ECUM1E104ZFN	C.CAPACITOR 25V 0.1U	2	
C240	ECUM1H220JCN	C.CAPACITOR CH 50V 22P	1	
C241,42	ECUM1E104ZFN	C.CAPACITOR 25V 0.1U	2	
C400	ECUM1H181JCN	C.CAPACITOR CH 50V 180P	1	
C401	ECUM1H330JCN	C.CAPACITOR CH 50V 33P	1	
C402	ECUM1H181JCN	C.CAPACITOR CH 50V 180P	1	
C403	ECUM1H330JCN	C.CAPACITOR CH 50V 33P	1	
C500-03	ECUM1E104ZFN	C.CAPACITOR 25V 0.1U	4	
D1-D6	MA151K	DIODE	6	
D7	MA153	DIODE	1	
D200	MA151K	DIODE	1	
D202,03	MA3024	DIODE	2	
D204	MA151K	DIODE	1	
HS1-S8	VSC3391	SHIELD CASE	8	
IC3-C6	UPC1663G	IC	4	
IC7	MC14053BF	IC	1	
IC8	NJM082BM	IC	1	
IC9	NJM1496M	IC	1	
IC10	NJM1496M	IC	1	
IC11	NJM082BM	IC	1	
IC13	TC4S584F	IC	1	
IC14	TC4S71F	IC	1	
IC15	TC4S584F	IC	1	
IC16	TC4S71F	IC	1	
IC17	TC4S584F	IC	1	
IC18,19	TC4S71F	IC	2	
IC20,21	TC4S66F	IC	2	
IC200	MC10H116L	IC	1	
IC201	MC10H102L	IC	1	
IC202	MC10H176L	IC	1	
IC203-05	MC10H116L	IC	3	
IC206	MC74HC86F	IC	1	
IC207	MC14528BF	IC	1	

Ref.No.	Part No.	Part Name & Description	Pcs	Remarks
IC208	MC14015BF	IC	1	
IC210,11	MC74HC86F	IC	2	
IC213	MC74HC08AF	IC	1	
IC214	TC7S02F	IC	1	
IC215,16	TC4S69F	IC	2	
IC300	MC10H116L	IC	1	
IC301	MC10H101L	IC	1	
L1,L2	ELEA100JA	COIL 10UH	2	
L202,03	VLQEL06F100J	COIL 10UH	2	
LY1-Y4	VSY2069	RELAY	4	
LY200,01	VSY2069	RELAY	2	
P501	VJP1234T	CONNECTOR (MALE)	1	
P502	VJP3079	CONNECTOR (MALE)	1	
P503	VJP1230T	CONNECTOR (MALE)	1	
P504	VJP1233G	CONNECTOR (MALE)	1	
P505,06	VJP1231T	CONNECTOR (MALE)	2	
P507	VJP1230T	CONNECTOR (MALE)	1	
P508	VJP1233T	CONNECTOR (MALE)	1	
P509,10	VJP1230T	CONNECTOR (MALE)	2	
P511	VJP1233R	CONNECTOR (MALE)	1	
P520,21	VJP2509	CONNECTOR (MALE)	2	
Q1-Q8	2SC3356	TRANSISTOR	8	
Q9	2SC1253	TRANSISTOR	1	
Q10-20	2SC1253	TRANSISTOR	11	
Q21-24	2SA1022-B	TRANSISTOR	4	
Q25,26	2SC3110	TRANSISTOR	2	
Q27-30	2SD601-R	TRANSISTOR	4	
Q31-34	2SA1022-B	TRANSISTOR	4	
Q35,36	2SC2845	TRANSISTOR	2	
Q37	2SB709-R	TRANSISTOR	1	
Q38	2SD601-R	TRANSISTOR	1	
Q200,01	2SA1022-B	TRANSISTOR	2	
Q202,03	2SD601-R	TRANSISTOR	2	
Q204	2SA1022-B	TRANSISTOR	1	
Q205	2SD601-R	TRANSISTOR	1	
Q206	2SA1022-B	TRANSISTOR	1	
Q207	2SD601-R	TRANSISTOR	1	
Q500	2SA1022-B	TRANSISTOR	1	
		RESISTORS		
R1,R2	ERJ6GEYJ103	M.RESISTOR CH1/10W 10K	2	
R3,R4	ERJ6GEYJ101	M.RESISTOR CH1/10W 100	2	
R5-R9	ERJ6GEYJ471	M.RESISTOR CH1/10W 470	5	
R10-12	ERJ6GEYJ471	M.RESISTOR CH1/10W 470	3	
R13,14	ERJ6GEYJ102	M.RESISTOR CH1/10W 1K	2	
R15,16	ERJ6GEYJ123	M.RESISTOR CH1/10W 12K	2	
R17-20	ERJ6GEYJ330	M.RESISTOR CH1/10W 33	4	
R21-24	ERJ6GEYJ470	M.RESISTOR CH1/10W 47	4	
R25-28	ERJ6GEYJ102	M.RESISTOR CH1/10W 1K	4	
R29,30	ERG2SG470	M.RESISTOR 2W 47	2	
R31,32	ERG2SJ680	M.RESISTOR 2W 68	2	
R33,34	ERJ6GEYJ104	M.RESISTOR CH1/10W 100K	2	
R35,36	ERJ6GEYJ222	M.RESISTOR CH1/10W 2.2K	2	
R37,38	ERJ6GEYF472	M.RESISTOR CH1/10W 4.7K	2	
R39,40	ERJ6GEYJ103	M.RESISTOR CH1/10W 10K	2	
R41,42	ERJ6GEYJ822	M.RESISTOR CH1/10W 8.2K	2	
R43	ERJ6GEYJ682	M.RESISTOR CH1/10W 6.8K	1	
R44,45	ERJ6GEYJ103	M.RESISTOR CH1/10W 10K	2	
R47-54	ERJ6GEYJ102	M.RESISTOR CH1/10W 1K	8	
R55-58	ERJ6GEYJ101	M.RESISTOR CH1/10W 100	4	
R59,60	ERJ8GCYJ100	M.RESISTOR CH 1/8W 10	2	

Ref.No.	Part No.	Part Name & Description	Pcs	Remarks
R61	ERJ6GEYJ561	M.RESISTOR CH1/10W 560	1	
R62,63	ERJ6GEYJ102	M.RESISTOR CH1/10W 1K	2	
R64	ERJ6GEYJ103	M.RESISTOR CH1/10W 10K	1	
R66	ERJ6GEYJ101	M.RESISTOR CH1/10W 100	1	
R67	ERJ6GEYJ331	M.RESISTOR CH1/10W 330	1	
R68	ERJ6GEYJ821	M.RESISTOR CH1/10W 820	1	
R69	ERJ6GEYJ102	M.RESISTOR CH1/10W 1K	1	
R70	ERJ6GEYJ182	M.RESISTOR CH1/10W 1.8K	1	
R71	ERJ6GEYJ332	M.RESISTOR CH1/10W 3.3K	1	
R72	ERJ6GEYF472	M.RESISTOR CH1/10W 4.7K	1	
R73	ERJ6GEYJ392	M.RESISTOR CH1/10W 3.9K	1	
R74	ERJ6GEYG153	M.RESISTOR CH1/10W 15K	1	
R75	ERJ6GEYJ123	M.RESISTOR CH1/10W 12K	1	
R76,77	ERJ6GEYJ103	M.RESISTOR CH1/10W 10K	2	
R78,79	ERJ6GEYJ101	M.RESISTOR CH1/10W 100	2	
R80-87	ERJ6GEYJ471	M.RESISTOR CH1/10W 470	8	
R88,89	ERJ6GEYJ102	M.RESISTOR CH1/10W 1K	2	
R90,91	ERJ6GEYJ123	M.RESISTOR CH1/10W 12K	2	
R92-95	ERJ6GEYJ330	M.RESISTOR CH1/10W 33	4	
R96-99	ERJ6GEYJ470	M.RESISTOR CH1/10W 47	4	
R100-03	ERJ6GEYJ102	M.RESISTOR CH1/10W 1K	4	
R104,05	ERG2SG470	M.RESISTOR 2W 47	2	
R106,07	ERG2SJ680	M.RESISTOR 2W 68	2	
R108,09	ERJ6GEYJ104	M.RESISTOR CH1/10W 100K	2	
R110,11	ERJ6GEYJ222	M.RESISTOR CH1/10W 2.2K	2	
R112,13	ERJ6GEYF472	M.RESISTOR CH1/10W 4.7K	2	
R114,15	ERJ6GEYJ103	M.RESISTOR CH1/10W 10K	2	
R116,17	ERJ6GEYJ822	M.RESISTOR CH1/10W 8.2K	2	
R118	ERJ6GEYJ682	M.RESISTOR CH1/10W 6.8K	1	
R119,20	ERJ6GEYJ103	M.RESISTOR CH1/10W 10K	2	
R122-29	ERJ6GEYJ102	M.RESISTOR CH1/10W 1K	8	
R130-33	ERJ6GEYJ101	M.RESISTOR CH1/10W 100	4	
R134,35	ERJ8GCYJ100	M.RESISTOR CH 1/8W 10	2	
R136	ERJ6GEYJ561	M.RESISTOR CH1/10W 560	1	
R137,38	ERJ6GEYJ102	M.RESISTOR CH1/10W 1K	2	
R139	ERJ6GEYJ103	M.RESISTOR CH1/10W 10K	1	
R141	ERJ6GEYJ101	M.RESISTOR CH1/10W 100	1	
R142	ERJ6GEYJ331	M.RESISTOR CH1/10W 330	1	
R143	ERJ6GEYJ821	M.RESISTOR CH1/10W 820	1	
R144	ERJ6GEYJ102	M.RESISTOR CH1/10W 1K	1	
R145	ERJ6GEYJ182	M.RESISTOR CH1/10W 1.8K	1	
R146	ERJ6GEYJ332	M.RESISTOR CH1/10W 3.3K	1	
R147	ERJ6GEYF472	M.RESISTOR CH1/10W 4.7K	1	
R148	ERJ6GEYJ392	M.RESISTOR CH1/10W 3.9K	1	
R149	ERJ6GEYG153	M.RESISTOR CH1/10W 15K	1	
R150	ERJ6GEYJ123	M.RESISTOR CH1/10W 12K	1	
R151-54	ERJ6GEYJ183	M.RESISTOR CH1/10W 18K	4	
R156	ERJ6GEYJ101	M.RESISTOR CH1/10W 100	1	
R158	ERJ6GEYJ101	M.RESISTOR CH1/10W 100	1	
R159	ERJ6GEYJ223	M.RESISTOR CH1/10W 22K	1	
R160	ERJ6GEYJ681	M.RESISTOR CH1/10W 680	1	
R161	ERJ6GEYJ103	M.RESISTOR CH1/10W 10K	1	
R162	ERJ6GEYJ470	M.RESISTOR CH1/10W 47	1	
R163	ERJ6GEYJ102	M.RESISTOR CH1/10W 1K	1	
R164	ERJ6GEYJ223	M.RESISTOR CH1/10W 22K	1	
R165	ERJ6GEYJ681	M.RESISTOR CH1/10W 680	1	
R166	ERJ6GEYJ103	M.RESISTOR CH1/10W 10K	1	
R167	ERJ6GEYJ470	M.RESISTOR CH1/10W 47	1	
R168	ERJ6GEYJ102	M.RESISTOR CH1/10W 1K	1	
R169,70	ERJ6GEYJ331	M.RESISTOR CH1/10W 330	2	
R171,72	ERJ6GEYJ560	M.RESISTOR CH1/10W 56	2	
R173,74	ERJ6GEYJ223	M.RESISTOR CH1/10W 22K	2	
R175	ERJ6GEYJ103	M.RESISTOR CH1/10W 10K	1	
R176	ERJ6GEYJ563	M.RESISTOR CH1/10W 56K	1	
R177-79	ERJ6GEYJ103	M.RESISTOR CH1/10W 10K	3	
R180	ERJ6GEYJ104	M.RESISTOR CH1/10W 100K	1	
R181,82	ERJ6GEYJ470	M.RESISTOR CH1/10W 47	2	
R200	ERJ6GEYJ101	M.RESISTOR CH1/10W 100	1	
R201	ERJ6GEYJ470	M.RESISTOR CH1/10W 47	1	
R202-05	ERJ6GEYJ471	M.RESISTOR CH1/10W 470	4	
R206	ERJ6GEYJ121	M.RESISTOR CH1/10W 120	1	
R207	ERJ6GEYJ471	M.RESISTOR CH1/10W 470	1	
R208	ERJ6GEYJ102	M.RESISTOR CH1/10W 1K	1	
R209	ERJ6GEYJ101	M.RESISTOR CH1/10W 100	1	
R210	ERJ6GEYJ102	M.RESISTOR CH1/10W 1K	1	

Ref.No.	Part No.	Part Name & Description	Pcs	Remarks
R211	ERJ6GEYJ101	M.RESISTOR CH1/10W 100	1	
R212	ERJ6GEYJ102	M.RESISTOR CH1/10W 1K	1	
R213	ERJ6GEYJ152	M.RESISTOR CH1/10W 1.5K	1	
R214	ERJ6GEYJ470	M.RESISTOR CH1/10W 47	1	
R215	ERJ6GEYJ101	M.RESISTOR CH1/10W 100	1	
R216	ERJ6GEYJ471	M.RESISTOR CH1/10W 470	1	
R217	ERJ6GEYJ470	M.RESISTOR CH1/10W 47	1	
R218	ERJ6GEYJ101	M.RESISTOR CH1/10W 100	1	
R219	ERJ6GEYJ471	M.RESISTOR CH1/10W 470	1	
R220	ERJ6GEYJ470	M.RESISTOR CH1/10W 47	1	
R221-23	ERJ6GEYJ471	M.RESISTOR CH1/10W 470	3	
R224	ERJ6GEYJ121	M.RESISTOR CH1/10W 120	1	
R225	ERJ6GEYJ471	M.RESISTOR CH1/10W 470	1	
R226	ERJ6GEYJ102	M.RESISTOR CH1/10W 1K	1	
R227,28	ERJ6GEYJ101	M.RESISTOR CH1/10W 100	2	
R229,30	ERJ6GEYJ102	M.RESISTOR CH1/10W 1K	2	
R231	ERJ6GEYJ152	M.RESISTOR CH1/10W 1.5K	1	
R232	ERJ6GEYJ470	M.RESISTOR CH1/10W 47	1	
R233,34	ERJ6GEYJ103	M.RESISTOR CH1/10W 10K	2	
R235	ERJ6GEYJ392	M.RESISTOR CH1/10W 3.9K	1	
R236,37	ERJ6GEYJ103	M.RESISTOR CH1/10W 10K	2	
R238	ERJ6GEYJ362	M.RESISTOR CH1/10W 3.6K	1	
R239	ERJ6GEYJ562	M.RESISTOR CH1/10W 5.6K	1	
R240,41	ERJ6GEYJ103	M.RESISTOR CH1/10W 10K	2	
R242	ERJ6GEYJ392	M.RESISTOR CH1/10W 3.9K	1	
R243,44	ERJ6GEYJ103	M.RESISTOR CH1/10W 10K	2	
R245	ERJ6GEYJ362	M.RESISTOR CH1/10W 3.6K	1	
R246	ERJ6GEYJ562	M.RESISTOR CH1/10W 5.6K	1	
R247	ERJ6GEYJ103	M.RESISTOR CH1/10W 10K	1	
R248	ERJ6GEYJ183	M.RESISTOR CH1/10W 18K	1	
R249	ERJ6GEYJ473	M.RESISTOR CH1/10W 47K	1	
R250	ERJ6GEYJ562	M.RESISTOR CH1/10W 5.6K	1	
R251	ERJ6GEYJ103	M.RESISTOR CH1/10W 10K	1	
R253	ERJ6GEYJ103	M.RESISTOR CH1/10W 10K	1	
R254	ERJ6GEYJ562	M.RESISTOR CH1/10W 5.6K	1	
R255	ERJ6GEYJ103	M.RESISTOR CH1/10W 10K	1	
R256	ERJ6GEYJ470	M.RESISTOR CH1/10W 47	1	
R258	ERJ6GEYJ103	M.RESISTOR CH1/10W 10K	1	
R259	ERJ6GEYJ182	M.RESISTOR CH1/10W 1.8K	1	
R260	ERJ6GEYJ331	M.RESISTOR CH1/10W 330	1	
R261	ERJ6GEYJ822	M.RESISTOR CH1/10W 8.2K	1	
R262	ERJ6GEYJ103	M.RESISTOR CH1/10W 10K	1	
R263	ERJ6GEYJ222	M.RESISTOR CH1/10W 2.2K	1	
R264	ERJ6GEYJ392	M.RESISTOR CH1/10W 3.9K	1	
R265	ERJ6GEYJ182	M.RESISTOR CH1/10W 1.8K	1	
R266	ERJ6GEYJ331	M.RESISTOR CH1/10W 330	1	
R267	ERJ6GEYJ822	M.RESISTOR CH1/10W 8.2K	1	
R268	ERJ6GEYJ103	M.RESISTOR CH1/10W 10K	1	
R269	ERJ6GEYJ222	M.RESISTOR CH1/10W 2.2K	1	
R270	ERJ6GEYJ392	M.RESISTOR CH1/10W 3.9K	1	
R271-78	ERJ6GEYJ471	M.RESISTOR CH1/10W 470	8	
R279-86	ERJ6GEYJ271	M.RESISTOR CH1/10W 270	8	
R287	ERJ6GEYJ183	M.RESISTOR CH1/10W 18K	1	
R288-90	ERJ6GEYJ103	M.RESISTOR CH1/10W 10K	3	
R500	ERJ6GEYJ471	M.RESISTOR CH1/10W 470	1	
R501	ERJ6GEYJ101	M.RESISTOR CH1/10W 100	1	
R502-05	ERJ6GEYJ821	M.RESISTOR CH1/10W 820	4	
R510	ERJ6GEYJ471	M.RESISTOR CH1/10W 470	1	
R511	ERJ6GEYJ101	M.RESISTOR CH1/10W 100	1	
R512-15	ERJ6GEYJ821	M.RESISTOR CH1/10W 820	4	
R520	ERJ6GEYF472	M.RESISTOR CH1/10W 4.7K	1	
R521-23	ERJ6GEYJ103	M.RESISTOR CH1/10W 10K	3	
R524	ERJ6GEYJ362	M.RESISTOR CH1/10W 3.6K	1	
R525	ERJ6GEYJ562	M.RESISTOR CH1/10W 5.6K	1	
R700,01	ERJ6GEYJ221	M.RESISTOR CH1/10W 220	2	
SW200	VSS0228	SWITCH	1	
T1-T4	VET0141	TRANSFORMER	4	

HEAD AMP POWER (R) VEP85026A
H.A REGULATOR (S) VEP85027A

Ref.No.	Part No.	Part Name & Description	Pcs	Remarks
TP1-P9	VJR0646	TEST POINT	9	
TP10-12	VJR0646	TEST POINT	3	
TP200-07	VJR0646	TEST POINT	8	
TPG0,G1	VJR0646	TEST POINT	2	
TPG200,01	VJR0646	TEST POINT	2	
VR2	VRV0109B102	V.RESISTOR 1K	1	
VR4	VRV0109B102	V.RESISTOR 1K	1	
VR5	VRV0109B502	V.RESISTOR 5K	1	
VR7	VRV0109B102	V.RESISTOR 1K	1	
VR9	VRV0109B102	V.RESISTOR 1K	1	
VR10	VRV0109B502	V.RESISTOR 5K	1	
VR11,12	VRV0109B501	V.RESISTOR 500	2	
VR200-03	VRV0109B502	V.RESISTOR 5K	4	
		MISCELLANEOUS		
	VJF0304	CLAMPER	1	
	VMP3037	P.C.BOARD HOLDER ANGLE	1	
	VMP3038	P.C.BOARD HOLDER ANGLE	1	
	VMZ1818	BARRIER	1	
	VMZ2164	BARRIER	1	
	VSC3328	SHIELD CASE	1	
	VSC3329	SHIELD CASE	1	
	VSC3331	SHIELD CASE	1	
	XTV3+6FFR	SCREW	8	
	VEP85026A	P.C.BOARD W/COMPONENT		
		HEAD AMP POWER (R)		
		CAPACITORS		
C5001,02	ECST1CD336Z	E.CAPACITOR 16V 33M	2	
C5003,04	ECST0GY335	E.CAPACITOR CH 4V 3.3U	2	
C5005,06	ECST1AY335Z	E.CAPACITOR 10V 3.3M	2	
D5001-04	MA701	DIODE	4	
IC5001	S-81250HG	IC	1	
IC5002	S-80230AG	IC	1	
Q5001	2SB956-R	TRANSISTOR	1	
Q5002	2SD1280-R	TRANSISTOR	1	
		RESISTORS		
R5001,02	ERJ8GCYJ470	M.RESISTOR CH 1/8W 47	2	
R5004	ERJ14YK2R2	C.RESISTOR 1/4W 2.2	1	
R5006	ERJ14YK2R2	C.RESISTOR 1/4W 2.2	1	
R5007	ERJ6GEYJ103	M.RESISTOR CH1/10W 10K	1	
R5008	ERJ6GEY0R00	C.RESISTOR 1/10W 0	1	
R5009	ERJ6GEYJ392	M.RESISTOR CH1/10W 3.9K	1	
R5010	ERJ6GEYJ562	M.RESISTOR CH1/10W 5.6K	1	

Ref.No.	Part No.	Part Name & Description	Pcs	Remarks
	VEP85027A	P.C.BOARD W/COMPONENT		
		H.A REGULATOR (S)		
		CAPACITORS		
C5001	ECA1HXLV220	E.CAPACITOR 50V 22U	1	
C5002	ECQB1H473JF	P.CAPACITOR 50V 0.047U	1	
C5003	ECQB1H392JF	P.CAPACITOR 50V 3900P	1	
C5004	ECQB1H473JF	P.CAPACITOR 50V 0.047U	1	
C5005,06	ECA1HXLV220	E.CAPACITOR 50V 22U	2	
C5007	ECA1CXLV101	E.CAPACITOR 16V 100U	1	
C5008,09	ECQB1H104JF	P.CAPACITOR 50V 0.1U	2	
C5010,11	ECCD2H331J	E.CAPACITOR 500V 330U	2	
C5012	ECKF1H103KB	C.CAPACITOR 50V 0.01U	1	
C5015	ECKF1H102KB	C.CAPACITOR 50V 1000P	1	
D5001-04	MA165	DIODE	4	
D5005,06	MA701A	DIODE	2	
HS5001	VSC3090	HEAT SINK	1	
IC5001	UPC494C	IC	1	
IC5002	AN7805	IC	1	
L5001	VLQ0242	COIL	1	
P521	VJP1230T	CONNECTOR (MALE)	1	
P522	VJP1230R	CONNECTOR (MALE)	1	
P523	VJP3079	CONNECTOR (MALE)	1	
P525	VJP1230T	CONNECTOR (MALE)	1	
P526	VJP1230G	CONNECTOR (MALE)	1	
P527	VJP1142T	CONNECTOR (MALE)	1	
P708	VJP1143	CONNECTOR (MALE)	1	
Q5001-04	2SB643	TRANSISTOR	4	
Q5005,06	2SK1059	TRANSISTOR	2	
		RESISTORS		
R5001	ERDS2TJ151	C.RESISTOR 1/4W 150	1	
R5002	ERDS2TJ512	C.RESISTOR 1/4W 5.1K	1	
R5003	ERDS2TJ332	C.RESISTOR 1/4W 3.3K	1	
R5004,05	ERDS2TJ222	C.RESISTOR 1/4W 2.2K	2	
R5006	ERDS2TJ472	C.RESISTOR 1/4W 4.7K	1	
R5007	ERDS2TJ562	C.RESISTOR 1/4W 5.6K	1	
R5008	ERDS2TJ272	C.RESISTOR 1/4W 2.7K	1	
R5009	ERDS2TJ223	C.RESISTOR 1/4W 22K	1	
R5010,11	ERDS2TJ102	C.RESISTOR 1/4W 1K	2	
R5012	ERDS2TJ821	C.RESISTOR 1/4W 820	1	
R5013	ERDS2TJ562	C.RESISTOR 1/4W 5.6K	1	
R5014	ERDS2TJ272	C.RESISTOR 1/4W 2.7K	1	
R5015	ERDS2TJ221	C.RESISTOR 1/4W 220	1	
R5016	ERDS2TJ562	C.RESISTOR 1/4W 5.6K	1	
R5017	ERDS2TJ821	C.RESISTOR 1/4W 820	1	

POWER SUPPLY 1 VEP81045A
POWER SUB 1 VEP81048A

Ref.No.	Part No.	Part Name & Description	Pcs	Remarks
R5018	ERDS2TJ272	C.RESISTOR 1/4W 2.7K	1	
R5019	ERDS2TJ221	C.RESISTOR 1/4W 220	1	
R5020	ERDS2TJ271	C.RESISTOR 1/4W 270	1	
TP5001-07	VJR0646	TEST POINT	7	
TPG5001,02	VJR0646	TEST POINT	2	
VR5001	VRV0064B502	V.RESISTOR 5K	1	
VR5002	VRV0064B501	V.RESISTOR 500	1	
		MISCELLANEOUS		
	VMP3270	P.C.BOARD HOLDER ANGLE	1	
	XNG3ES	NUT	1	
	XTV3+6F	SCREW	2	
	XYN3+C8	SCREW	1	
	VEP81045A	P.C.BOARD W/COMPONENT		
		POWER SUPPLY 1		
	VEP81048A	P.C.BOARD W/COMPONENT		FOR VEP81045A
		POWER SUB 1		
		CAPACITORS		
C1001-04	ECOS2DA122EA	E.CAPACITOR 200V 1200U	4	
C1005	ECKD3A331KB	C.CAPACITOR 1000V 330P	1	
C1006	ECQB1H472JF	P.CAPACITOR 50V 4700P	1	
C1007	ECA1HXS010	E.CAPACITOR 50V 1U	1	
C1008	ECEA1CNX101	E.CAPACITOR 16V 100U	1	
C1017,18	ECQE10223KF	P.CAPACITOR 10V 0.022U	2	
C1019	ECEA1HNX470	E.CAPACITOR 50V 47U	1	
C1023	ECEA1HNX471	E.CAPACITOR 50V 470U	1	
C1024,25	ECQE1103KF	P.CAPACITOR 0.01U	2	
C1026,27	ECEA1VNX102	E.CAPACITOR 35V 1000U	2	
C1028	ECA1VFZ221L	E.CAPACITOR 35V 220U	1	
C1029	ECA1VXLV221	E.CAPACITOR 35V 220U	1	
C1030	ECQE1474KF	P.CAPACITOR 0.47U	1	
C1031	ECA1EFZ121	E.CAPACITOR 25V 120U	1	
C1032	ECQE1474KF	P.CAPACITOR 0.47U	1	
C1033	ECA1EFZ121	E.CAPACITOR 25V 120U	1	
C1039,40	ECA1CFZ221L	E.CAPACITOR 16V 220U	2	
C1041,42	ECA1AFZ221	E.CAPACITOR 10V 220U	2	
C1060	ECQE2155KF	P.CAPACITOR 1.5U	1	
C1061	ECKDNS102MB	C.CAPACITOR 1000P	1	
C1064	ECKDNS102MB	C.CAPACITOR 1000P	1	
C1201,02	ECA1VXS220	E.CAPACITOR 35V 22U	2	
C1203	ECUM1H101JCN	C.CAPACITOR CH 50V 100P	1	
C1204	ECUM1H223ZFN	C.CAPACITOR CH 50V 0.022U	1	
C1205	ECA1CXS100	E.CAPACITOR 16V 10U	1	
C1206	ECUM1H224ZFM	C.CAPACITOR CH 50V 0.22U	1	
C1207	ECUM1H223ZFN	C.CAPACITOR CH 50V 0.022U	1	
C1208	ECUM1H101JCN	C.CAPACITOR CH 50V 100P	1	
C1209	ECUM1H224ZFM	C.CAPACITOR CH 50V 0.22U	1	
C1210	ECUM1H101JCN	C.CAPACITOR CH 50V 100P	1	
C1211	ECUM1H223ZFN	C.CAPACITOR CH 50V 0.022U	1	
C1212	ECA1CXS100	E.CAPACITOR 16V 10U	1	
C1213	ECUM1H224ZFM	C.CAPACITOR CH 50V 0.22U	1	
C1214	ECUM1H223ZFN	C.CAPACITOR CH 50V 0.022U	1	
C1215	ECUM1H101JCN	C.CAPACITOR CH 50V 100P	1	
C1216	ECUM1H224ZFM	C.CAPACITOR CH 50V 0.22U	1	
C1307	ECQU2A104MN	P.CAPACITOR 100V 0.1U	1	
C1309	ECQU2A224MN	P.CAPACITOR 100V 0.22U	1	

Ref.No.	Part No.	Part Name & Description	Pcs	Remarks
D1001	D10XB40H	DIODE	1	
D1002	MA4051M	DIODE	1	
D1003,04	ERB35-02	DIODE	2	
D1010	10E1	DIODE	1	
D1017,18	RP1H	DIODE	2	
D1019	D8LC40	DIODE	1	
D1020	D8LCA20	DIODE	1	
D1021	D8LCA20R	DIODE	1	
D1022,23	MA185	DIODE	2	
D1037	11DQ04	DIODE	1	
D1201	MA151WK	DIODE	1	
D1202	MA151WA	DIODE	1	
D1203,04	TL431CLP	DIODE	2	
D1205	RD16ESB1	DIODE	1	
IC1001	AN7818F	IC	1	
IC1002	AN7918F	IC	1	
IC1201	UPC4741G	IC	1	
JP1001	VJP2824A007	CONNECTOR (MALE)	1	
JP1002	VJP2824A006	CONNECTOR (MALE)	1	
JP1003	VJP1188T	CONNECTOR (MALE)	1	
JP1004	VJP1142T	CONNECTOR (MALE)	1	
L1001	VLQ0501	COIL	1	
L1003	VLQ0134	COIL	1	
L1008	VLQ0504220M	COIL 22U	1	
L1009	VLQ0236	COIL	1	
P1601,02	VJP3117	CONNECTOR (MALE)	2	
P1604	VJP2824B004	CONNECTOR (MALE)	1	
P1605	VJP1243T	CONNECTOR (MALE)	1	
P1606	VJP1149	CONNECTOR (MALE)	1	
P1607,08	VJP2824B003	CONNECTOR (MALE)	2	
P1609	VJP1150	CONNECTOR (MALE)	1	
P1691,92	VJR0161	CONNECTOR	2	
Q1001	2SC3979	TRANSISTOR	1	
Q1002	2SD637	TRANSISTOR	1	
Q1003	2SB644	TRANSISTOR	1	
Q1008,09	2SB642	TRANSISTOR	2	
Q1010	2SD637	TRANSISTOR	1	
Q1015	2SB951A	TRANSISTOR	1	
Q1016	2SD1277A	TRANSISTOR	1	
Q1017	2SB951A	TRANSISTOR	1	
Q1018	2SD1277A	TRANSISTOR	1	
Q1201	2SD602	TRANSISTOR	1	
Q1202	2SB710	TRANSISTOR	1	
Q1203	2SD602	TRANSISTOR	1	
Q1204	2SB710	TRANSISTOR	1	
		RESISTORS		
R1001,02	ERG2SJ333	M.RESISTOR 2W 33K	2	
R1003	ERDS1TJ104	C.RESISTOR 1/2W 100K	1	
R1004	ERG2SJ101	M.RESISTOR 2W 100	1	
R1005,06	ERDS2TJ101	C.RESISTOR 1/4W 100	2	
R1007	ERDS2TJ2R2	C.RESISTOR 1/4W 2.2	1	
R1008	ERDS2TJ102	C.RESISTOR 1/4W 1K	1	
R1025	ERDS2TJ102	C.RESISTOR 1/4W 1K	1	
R1027-30	ERG2SJ104	M.RESISTOR 2W 100K	4	

POWER SUPPLY 2 VEP81047A
POWER SUB 2 VEP81046A

Ref.No.	Part No.	Part Name & Description	Pcs	Remarks
R1033	ERDS2TJ101	C.RESISTOR 1/4W 100	1	
R1034	ERX3SZJR10	M.RESISTOR 3W 0.1	1	
R1035	ERDS2TJ101	C.RESISTOR 1/4W 100	1	
R1037,38	ERG3SJ102	M.RESISTOR 3W 1K	2	
R1039	ERDS2TJ101	C.RESISTOR 1/4W 100	1	
R1040	ERX3SZJR10	M.RESISTOR 3W 0.1	1	
R1041	ERDS2TJ101	C.RESISTOR 1/4W 100	1	
R1043	ERX1SJR27	M.RESISTOR 1W 0.27	1	
R1044,45	ERDS2TJ101	C.RESISTOR 1/4W 100	2	
R1046	ERG5SJ181	M.RESISTOR 5W 180	1	
R1047	ERDS2TJ1R0	C.RESISTOR 1/4W 1.0	1	
R1058-61	ERDS2TJ102	C.RESISTOR 1/4W 1K	4	
R1081	ERDS1TJ104	C.RESISTOR 1/2W 100K	1	
R1201,02	ERDS2TJ681	C.RESISTOR 1/4W 680	2	
R1203	ERJ6GEYJ101	M.RESISTOR CH1/10W 100	1	
R1204	ERJ6GEYJ330	M.RESISTOR CH1/10W 33	1	
R1205	ERJ6GEYJ332	M.RESISTOR CH1/10W 3.3K	1	
R1206	ERJ6GEYJ104	M.RESISTOR CH1/10W 100K	1	
R1207	ERJ6GEYF333	M.RESISTOR CH1/10W 33K	1	
R1208	ERJ6GEYJ132	M.RESISTOR CH1/10W 1.3K	1	
R1209	ERJ6GEYJ433	M.RESISTOR CH1/10W 43K	1	
R1210	ERJ6GEYJ113	M.RESISTOR CH1/10W 11K	1	
R1211	VRE0034E103	M.RESISTOR CH 1/10W 10K	1	
R1212	ERJ6GEYJ101	M.RESISTOR CH1/10W 100	1	
R1213	ERJ6GEYJ330	M.RESISTOR CH1/10W 33	1	
R1214	ERJ6GEYJ332	M.RESISTOR CH1/10W 3.3K	1	
R1215	ERJ6GEYJ104	M.RESISTOR CH1/10W 100K	1	
R1216	VRE0034E103	M.RESISTOR CH 1/10W 10K	1	
R1217	ERJ6GEYJ101	M.RESISTOR CH1/10W 100	1	
R1218	ERJ6GEYJ330	M.RESISTOR CH1/10W 33	1	
R1219	ERJ6GEYJ332	M.RESISTOR CH1/10W 3.3K	1	
R1220	ERJ6GEYJ104	M.RESISTOR CH1/10W 100K	1	
R1221	ERJ6GEYF333	M.RESISTOR CH1/10W 33K	1	
R1222	ERJ6GEYJ561	M.RESISTOR CH1/10W 560	1	
R1223	ERJ6GEYJ512	M.RESISTOR CH 1/10W 5.1K	1	
R1224	ERJ6GEYJ622	M.RESISTOR CH1/10W 6.2K	1	
R1225	VRE0034E103	M.RESISTOR CH 1/10W 10K	1	
R1226	ERJ6GEYJ101	M.RESISTOR CH1/10W 100	1	
R1227	ERJ6GEYJ330	M.RESISTOR CH1/10W 33	1	
R1228	ERJ6GEYJ332	M.RESISTOR CH1/10W 3.3K	1	
R1229	ERJ6GEYJ104	M.RESISTOR CH1/10W 100K	1	
R1230	VRE0034E103	M.RESISTOR CH 1/10W 10K	1	
R1301	VSF0093	F.RESISTOR	1	
R1302,03	VRE0074	M.RESISTOR	2	
R1306	ERDS1TJ101	C.RESISTOR 1/2W 100	1	
RY1301	VSY1033	RELAY	1	
T1001	VLT0632	TRANSFORMER	1	
T1002	VLT0672	TRANSFORMER	1	
TP2	VJR0646	TEST POINT	1	
TPG1	VJR0646	TEST POINT	1	
VR1001	VRV0063B201	V.RESISTOR 200	1	
VR1201	VRV0063B202	V.RESISTOR 2K	1	
VR1202	VRV0063B302	V.RESISTOR 3K	1	
		MISCELLANEOUS		
	VLT0310	TRANSFORMER	1	
	VMP3083	TR SUPPORT ANGLE	9	
	VMZ0965	CAPACITOR COVER	2	
	VMZ1792	BARRIER	1	
	VMZ1794	BARRIER	1	
	VSC1068	HEAT SINK	1	
	VSC3327	SHIELD CASE	1	
	VSC3370	SHIELD CASE	1	
	VSC3371	SHIELD CASE	1	
	XYN3+F10S	SCREW	2	
	XYN3+F6S	SCREW	10	
	XYN3+F8S	SCREW	4	
	VEP81047A	P.C.BOARD W/COMPONENT		
		POWER SUPPLY 2		
	VEP81046A	P.C.BOARD W/COMPONENT		FOR VEP81047A
		POWER SUB 2		
		CAPACITORS		
C1009,10	ECA1HXS2R2	E.CAPACITOR 50V 2.2U	2	
C1011	ECQF6222KZ	P.CAPACITOR 2200P	1	
C1012	ECQE2155KF	P.CAPACITOR 1.5U	1	
C1013,14	ECA1HXS2R2	E.CAPACITOR 50V 2.2U	2	
C1015	ECQF6222KZ	P.CAPACITOR 2200P	1	
C1016	ECQE2155KF	P.CAPACITOR 1.5U	1	
C1020,21	ECEA1VNX470	E.CAPACITOR 35V 47U	2	
C1034	ECQE1103KF	P.CAPACITOR 0.01U	1	
C1035-38	ECEA1ENX102	E.CAPACITOR 25V 1000U	4	
C1043	ECA1CFZ102	E.CAPACITOR 16V 1000U	1	
C1044,45	ECA1AFZ222	E.CAPACITOR 10V 2200U	2	
C1046	ECQE1103KF	P.CAPACITOR 0.01U	1	
C1047-50	ECA1CFZ222L	E.CAPACITOR 16V 2200U	4	
C1051	ECQE1103KF	P.CAPACITOR 0.01U	1	
C1052	ECEA1AGE103	E.CAPACITOR 10V 10000U	1	
C1053	ECA1AFZ472	E.CAPACITOR 10V 4700U	1	
C1054-57	ECA1HXS2R2	E.CAPACITOR 50V 2.2U	4	
C1101	ECA1VFZ560	E.CAPACITOR 35V 56U	1	
C1102	ECUM1H103KBN	C.CAPACITOR CH 50V 0.01U	1	
C1103	ECEA1AKN100	E.CAPACITOR 10V 10U	1	
C1104	ECUM1E104ZFN	C.CAPACITOR 25V 0.1U	1	
C1105	ECUM1H472KBN	C.CAPACITOR CH 50V 4700P	1	
C1106	ECA1VXS220	E.CAPACITOR 35V 22U	1	
C1107	ECUM1H102JCN	C.CAPACITOR CH 50V 1000P	1	
C1108	ECA1VXS4R7	E.CAPACITOR 35V 4.7U	1	
C1109	ECUM1E104ZFN	C.CAPACITOR 25V 0.1U	1	
C1110	ECUM1E223ZFN	C.CAPACITOR CH 25V 0.022U	1	
C1112	ECUM1E224ZFM	C.CAPACITOR CH 25V 0.22U	1	
C1113	ECUM1H102JCN	C.CAPACITOR CH 50V 1000P	1	
C1114	ECEA1AKN100	E.CAPACITOR 10V 10U	1	
C1115	ECUM1H472KBN	C.CAPACITOR CH 50V 4700P	1	
C1116	ECUM1H473ZFN	C.CAPACITOR CH 50V 0.047U	1	
C1117	ECA1CXS470	E.CAPACITOR 16V 47U	1	
D1005,06	ERC25-04	DIODE	2	
D1007,08	11DQ04	DIODE	2	
D1009	RD2.7ESB	DIODE	1	
D1011,12	ERC25-04	DIODE	2	
D1013,14	11DQ04	DIODE	2	
D1024	D8LCA20	DIODE	1	
D1025	D8LCA20R	DIODE	1	
D1027,28	11DQ04	DIODE	2	
D1029	21DQ04	DIODE	1	
D1030	MA752A	DIODE	1	
D1031-33	MA756	DIODE	3	
D1034	S60SC4M	DIODE	1	
D1035,36	11DQ04	DIODE	2	
D1101	MA3068M	DIODE	1	
D1102	MA151K	DIODE	1	
D1103	MA153	DIODE	1	
D1104	MA3120-M	DIODE	1	
D1105	21DQ04	DIODE	1	

Ref.No.	Part No.	Part Name & Description	Pcs	Remarks
D1106	MA3075M	DIODE	1	
D1107	MA153	DIODE	1	
D1108	MA3047M	DIODE	1	
D1109	MA151K	DIODE	1	
IC1101-03	UPC494G	IC	3	
IC1104	UPC339G	IC	1	
L1004	VLT0315	TRANSFORMER	1	
L1005	VLQ0487	COIL	1	
L1006	VLQ0488	COIL	1	
L1007	VLQ0298	COIL	1	
L1010-12	VLQ0504100M	COIL 10U	3	
L1013	VLQ0504220M	COIL 22U	1	
L1014,15	VLQ0504100M	COIL 10U	2	
L1016	VLQ0486	COIL	1	
P1610,11	VJP2824B002	CONNECTOR (MALE)	2	
P1612	VJP2824B010	CONNECTOR (MALE)	1	
P1681,82	VJR0164	CONNECTOR	2	
Q1004-07	2SC3528	TRANSISTOR	4	
Q1011	2SB642	TRANSISTOR	1	
Q1012	2SD637	TRANSISTOR	1	
Q1013,14	2SA1096	TRANSISTOR	2	
Q1019	2SD1445A	TRANSISTOR	1	
Q1020	2SD637	TRANSISTOR	1	
Q1021	2SB642	TRANSISTOR	1	
Q1022	2SD637	TRANSISTOR	1	
Q1023,24	2SA1096	TRANSISTOR	2	
Q1025	2SD1277A	TRANSISTOR	1	
Q1101-03	UN2113	TRANSISTOR	3	
Q1104	2SB710	TRANSISTOR	1	
Q1105	2SD602	TRANSISTOR	1	
Q1106	UN2213	TRANSISTOR	1	
Q1107	2SD602	TRANSISTOR	1	
Q1108	2SB710	TRANSISTOR	1	
Q1109	2SD1277A	TRANSISTOR	1	
Q1110,11	UN2213	TRANSISTOR	2	
Q1112,13	2SB710	TRANSISTOR	2	
Q1114	UN2213	TRANSISTOR	1	
		RESISTORS		
R1009	ERG2SJ220	M.RESISTOR 2W 22	1	
R1012,13	ERDS1TJ100	C.RESISTOR 1/2W 10	2	
R1014,15	ERX1SJ5R1	M.RESISTOR 1W 5.1	2	
R1018	ERG2SJ220	M.RESISTOR 2W 22	1	
R1021,22	ERDS1TJ100	C.RESISTOR 1/2W 10	2	
R1023,24	ERX1SJ5R1	M.RESISTOR 1W 5.1	2	
R1026	ERQ1CJ4R7	F.RESISTOR 1W 4.7	1	
R1048	ERQ3CJ100	F.RESISTOR 3W 10	1	
R1049	ERDS2TJ101	C.RESISTOR 1/4W 100	1	
R1050	ERX3SZJR10	M.RESISTOR 3W 0.1	1	
R1051	ERDS2TJ101	C.RESISTOR 1/4W 100	1	
R1052	ERDS2TJ472	C.RESISTOR 1/4W 4.7K	1	
R1053	ERX3SZJR10	M.RESISTOR 3W 0.1	1	
R1054-57	ERDS2TJ101	C.RESISTOR 1/4W 100	4	
R1062	ERDS2TJ180	C.RESISTOR 1/4W 18	1	
R1063	ERDS2TJ101	C.RESISTOR 1/4W 100	1	
R1064	ERX3SZJR10	M.RESISTOR 3W 0.1	1	
R1065	ERDS2TJ101	C.RESISTOR 1/4W 100	1	
R1066	ERG1SJ470	M.RESISTOR 1W 47	1	
R1067	ERQ3CJ3R3	F.RESISTOR 3W 3.3	1	
R1068	ERDS2TJ101	C.RESISTOR 1/4W 100	1	
R1069	ERX3SZJR10	M.RESISTOR 3W 0.1	1	

Ref.No.	Part No.	Part Name & Description	Pcs	Remarks
R1070	ERDS2TJ101	C.RESISTOR 1/4W 100	1	
R1071	ERF20HMJ300	W.RESISTOR 30	1	
R1072	ERF5TLK68M	W.RESISTOR	1	
R1073,74	ERDS2TJ101	C.RESISTOR 1/4W 100	2	
R1075	ERQ12HJ3R3	F.RESISTOR 1/2W 3.3	1	
R1076	VRE0064	M.RESISTOR	1	
R1078,79	ERDS2TJ101	C.RESISTOR 1/4W 100	2	
R1080	ERDS2TJ390	C.RESISTOR 1/4W 39	1	
R1101	ERJ6GEYF472	M.RESISTOR CH1/10W 4.7K	1	
R1102	ERJ6GEYJ331	M.RESISTOR CH1/10W 330	1	
R1103	ERJ6GEYJ103	M.RESISTOR CH1/10W 10K	1	
R1104	ERJ6GEYG181	M.RESISTOR CH1/10W 180	1	
R1105,06	ERJ6GEYJ222	M.RESISTOR CH1/10W 2.2K	2	
R1107	ERJ6GEYJ223	M.RESISTOR CH1/10W 22K	1	
R1108	ERJ6GEYJ101	M.RESISTOR CH1/10W 100	1	
R1109	ERJ6GEYJ561	M.RESISTOR CH1/10W 560	1	
R1110	ERJ6GEYJ101	M.RESISTOR CH1/10W 100	1	
R1111	ERJ6GEYJ393	M.RESISTOR CH1/10W 39K	1	
R1112	ERJ6GEYJ682	M.RESISTOR CH1/10W 6.8K	1	
R1113	ERJ6GEYJ393	M.RESISTOR CH1/10W 39K	1	
R1114	ERJ6GEYJ223	M.RESISTOR CH1/10W 22K	1	
R1115	ERJ6GEYF333	M.RESISTOR CH1/10W 33K	1	
R1116	ERJ6GEYG153	M.RESISTOR CH1/10W 15K	1	
R1117	ERJ6GEYJ393	M.RESISTOR CH1/10W 39K	1	
R1118	ERJ6GEYJ223	M.RESISTOR CH1/10W 22K	1	
R1119	ERJ6GEYJ102	M.RESISTOR CH1/10W 1K	1	
R1120,21	ERJ6GEYJ223	M.RESISTOR CH1/10W 22K	2	
R1122	ERJ6GEYF124	M.RESISTOR CH1/10W 120K	1	
R1123-25	ERJ6GEYJ102	M.RESISTOR CH1/10W 1K	3	
R1126	ERJ6GEYJ223	M.RESISTOR CH1/10W 22K	1	
R1127-29	ERJ6GEYJ473	M.RESISTOR CH1/10W 47K	3	
R1130	ERJ6GEYG153	M.RESISTOR CH1/10W 15K	1	
R1131	ERJ6GEYJ223	M.RESISTOR CH1/10W 22K	1	
R1132	ERJ6GEYF472	M.RESISTOR CH1/10W 4.7K	1	
R1133,34	ERJ6GEYJ103	M.RESISTOR CH1/10W 10K	2	
R1135	ERJ6GEYJ104	M.RESISTOR CH1/10W 100K	1	
R1136	ERJ6GEYF333	M.RESISTOR CH1/10W 33K	1	
R1137	ERG1SJ470	M.RESISTOR 1W 47	1	
R1138	ERJ6GEYJ391	M.RESISTOR CH1/10W 390	1	
R1139	ERJ6GEYJ392	M.RESISTOR CH1/10W 3.9K	1	
R1140	ERJ6GEYF472	M.RESISTOR CH1/10W 4.7K	1	
R1141	ERJ6GEYJ102	M.RESISTOR CH1/10W 1K	1	
R1142	ERJ6GEYJ103	M.RESISTOR CH1/10W 10K	1	
R1143	ERJ6GEYJ331	M.RESISTOR CH1/10W 330	1	
R1144,45	ERJ6GEYJ222	M.RESISTOR CH1/10W 2.2K	2	
R1146	ERJ6GEYJ561	M.RESISTOR CH1/10W 560	1	
R1147	ERJ6GEYJ103	M.RESISTOR CH1/10W 10K	1	
R1148	ERJ6GEYG153	M.RESISTOR CH1/10W 15K	1	
R1149	ERJ6GEYJ101	M.RESISTOR CH1/10W 100	1	
R1150	ERJ6GEYJ221	M.RESISTOR CH1/10W 220	1	
R1151	ERJ6GEYG153	M.RESISTOR CH1/10W 15K	1	
R1152,53	ERJ6GEYJ512	M.RESISTOR CH 1/10W 5.1K	2	
R1154	ERJ6GEYJ103	M.RESISTOR CH1/10W 10K	1	
R1155	ERJ6GEYJ101	M.RESISTOR CH1/10W 100	1	
R1156,57	ERJ6GEYJ102	M.RESISTOR CH1/10W 1K	2	
R1158	ERJ6GEYJ103	M.RESISTOR CH1/10W 10K	1	
R1159	ERJ6GEYJ821	M.RESISTOR CH1/10W 820	1	
R1160	ERJ6GEYJ152	M.RESISTOR CH1/10W 1.5K	1	
R1161	ERJ6GEYJ562	M.RESISTOR CH1/10W 5.6K	1	
R1162	ERJ6GEYJ103	M.RESISTOR CH1/10W 10K	1	
R1163	ERJ6GEYJ102	M.RESISTOR CH1/10W 1K	1	
T1003	VLT0673	TRANSFORMER	1	
T1004	VLT0674	TRANSFORMER	1	
T1005	VLT0675	TRANSFORMER	1	
T1006-09	VLT0638	TRANSFORMER	4	
TG1001	VSQ0796	THERMAL GUARD	1	

POWER SUB 3 VEP81055A

POWER LED VEP80628A

EJECT VEP80591A

AUTO OFF VEP80627A

RF MODE VEP86097A

Ref.No.	Part No.	Part Name & Description	Pcs	Remarks
TP1001	VJR0646	TEST POINT	1	
VR1101	VRV0064B202	V.RESISTOR 2K	1	
VR1102	VRV0064B203	V.RESISTOR 20K	1	
VR1103	VRV0064B202	V.RESISTOR 2K	1	
		MISCELLANEOUS		
	VMP3083	TR SUPPORT ANGLE	9	
	VMP3084	P.C.BOARD HOLDER ANGLE	5	
	VMZ1793	BARRIER	1	
	VMZ1796	BARRIER	1	
	VSC3368	SHIELD CASE	1	
	VSC3369	SHIELD CASE	1	
	XYN3+F6S	SCREW	14	
	XYN3+F8S	SCREW	4	
	VEP81055A	P.C.BOARD W/COMPONENT		
		POWER SUB 3		
ARR1301	VSF0086	F.RESISTOR	1	
		CAPACITORS		
C1301,02	ECQU2A224MN	P.CAPACITOR 100V 0.22U	2	
C1304	ECKDNS222ME	C.CAPACITOR 2200P	1	
C1306	ECKDNS222ME	C.CAPACITOR 2200P	1	
C1308	ECQU2A224MN	P.CAPACITOR 100V 0.22U	1	
C1310,11	ECKDNS471MB	C.CAPACITOR 470P	2	
L1301	VLQ0499	COIL	1	
L1302	VLQ0500	COIL	1	
		RESISTORS		
R1308	ERC12AGM334	S.RESISTOR 1/2W 330K	1	
		MISCELLANEOUS		
	VMZ0965	CAPACITOR COVER	4	
	VMZ1798	BARRIER	3	
	VMZ1799	BARRIER	1	
	VMZ1810	BARRIER	1	
	VEP80591A	P.C.BOARD W/COMPONENT		
		EJECT		

Ref.No.	Part No.	Part Name & Description	Pcs	Remarks
P391	VJP1230T	CONNECTOR (MALE)	1	
SW1	VSP0543	SWITCH	1	
	VEP80628A	P.C.BOARD W/COMPONENT		
		POWER LED		
D1	EBG5504S	DIODE	1	
P395	VJP1230T	CONNECTOR (MALE)	1	
		RESISTORS		
R1	ERDS2TJ221	C.RESISTOR 1/4W 220	1	
		MISCELLANEOUS		
	VMX0473	LED HOLDER	1	
	VEP80627A	P.C.BOARD W/COMPONENT		
		AUTO OFF		
D1	VLL0029	DIODE	1	
P392	VJP1230R	CONNECTOR (MALE)	1	
P393	VJP1232T	CONNECTOR (MALE)	1	
P394	VJP1230T	CONNECTOR (MALE)	1	
		RESISTORS		
R1-R3	ERDS2TJ151	C.RESISTOR 1/4W 150	3	
	VEP86097A	P.C.BOARD W/COMPONENT		
		RF MODE		
		CAPACITORS		

FR SW VEP86093A

FR FUNCTION VEP86094A

Ref.No.	Part No.	Part Name & Description	Pcs	Remarks
C1	ECEV1CV470Q	E.CAPACITOR 16V 47U	1	
D1-D9	MA151K	DIODE	9	
D10-15	MA151K	DIODE	6	
P310	VJP1879T	CONNECTOR (MALE)	1	
P311	VJP1881T	CONNECTOR (MALE)	1	
		RESISTORS		
R1-R9	ERJ6GEYJ103	M.RESISTOR CH1/10W 10K	9	
R10-15	ERJ6GEYJ103	M.RESISTOR CH1/10W 10K	6	
	VEP86093A	P.C.BOARD W/COMPONENT		
		FR SW		
		CAPACITORS		
C1-C3	ECA1AXS680	E.CAPACITOR 10V 68U	3	
C4-C9	ECUM1E104ZFN	E.CAPACITOR 25V 0.1U	6	
C10-13	ECUM1E104ZFN	E.CAPACITOR 25V 0.1U	4	
C4D	ECA1HXSR33	E.CAPACITOR 50V 0.33U	1	
D1-D9	MA151K	DIODE	9	
D10-14	MA151K	DIODE	5	
IC1,C2	MC74HC244AF	IC	2	
IC3,C4	MC74HC138AF	IC	2	
IC5-C7	MC74HC273AF	IC	3	
IC8	MC74HC04AF	IC	1	
IC9	MC74HC10F	IC	1	
IC10	MC74HC27F	IC	1	
IC11-13	M54514AP	IC	3	
LED15	EBR5504S	DIODE	1	
LED16,17	EBG5504S	DIODE	2	
LED18	LN41YCPHLU	IC	1	
LED19	LN11WP34	LED	1	
LED20-22	EBG5504S	DIODE	3	
LES15-18	VMX0473	LED SPACER	4	
LES19	VMX1604	LED SPACER	1	
LES20-22	KL04	RP	3	
P315	VJP1248T	CONNECTOR (MALE)	1	
P316	VJP1248R	CONNECTOR (MALE)	1	
P317	VJP3091	CONNECTOR (MALE)	1	
P318	VJP1248T	CONNECTOR (MALE)	1	
P319	VJP1248R	CONNECTOR (MALE)	1	
P320	VJP1245T	CONNECTOR (MALE)	1	
P321	VJP1248T	CONNECTOR (MALE)	1	
P322	VJP3090	CONNECTOR (MALE)	1	

Ref.No.	Part No.	Part Name & Description	Pcs	Remarks
Q1,Q2	UN1224	TRANSISTOR	2	
		RESISTORS		
R1-R9	ERJ6GEYJ103	M.RESISTOR CH1/10W 10K	9	
R10-14	ERJ6GEYJ103	M.RESISTOR CH1/10W 10K	5	
R15-20	ERJ6GEYJ121	M.RESISTOR CH1/10W 120	6	
R21	ERJ6GEYJ391	M.RESISTOR CH1/10W 390	1	
R22-29	ERJ6GEYJ121	M.RESISTOR CH1/10W 120	8	
R30-37	ERJ6GEYJ391	M.RESISTOR CH1/10W 390	8	
R38-53	ERJ6GEYJ103	M.RESISTOR CH1/10W 10K	16	
R54	ERJ6GEYJ823	M.RESISTOR CH1/10W 82K	1	
SW1	VSP0554	SWITCH	1	
SW2-W4	VSP0544	SWITCH	3	
SW5	VSP0542	SWITCH	1	
SW6	VSP0545	SWITCH	1	
SW7	VSP0548	SWITCH	1	
SW8	VSP0552	SWITCH	1	
SW9	VSP0549	SWITCH	1	
SW10	VSP0550	SWITCH	1	
SW11	VSP0551	SWITCH	1	
SW12	VSP0546	SWITCH	1	
SW13	VSP0547	SWITCH	1	
SW14	VSP0553	SWITCH	1	
		MISCELLANEOUS		
	VGU5319	SWITCH COVER	1	ENTRLY OUT
	VGU5346	SWITCH COVER	3	EXECUTE ETC
	VGU5345	SWITCH COVER	1	READY
	VGU5320	SWITCH COVER	1	PLAY
	VGU5324	SWITCH COVER	1	STOP
	VGU5321	SWITCH COVER	1	REC 1 EDIT
	VGU5325	SWITCH COVER	1	JOG
	VGU5326	SWITCH COVER	1	VAR
	VGU5327	SWITCH COVER	1	SHTL
	VGU5323	SWITCH COVER	1	FF
	VGU5318	SWITCH COVER	1	ENTRY IN
	VEP86094A	P.C.BOARD W/COMPONENT		
		FR FUNCTION		
		CAPACITORS		
C1	ECEV1CV470Q	E.CAPACITOR 16V 47U	1	
D1-D9	MA151K	DIODE	9	
D10-37	MA151K	DIODE	28	
P312,13	VJP1879T	CONNECTOR (MALE)	2	
P314	VJP1876T	CONNECTOR (MALE)	1	
		RESISTORS		
R1-R9	ERJ6GEYJ103	M.RESISTOR CH1/10W 10K	9	

FR BASE 1 VEP86095A
FR BASE 2 VEP86096D

Ref.No.	Part No.	Part Name & Description	Pcs	Remarks
R10-16	ERJ6GEYJ103	M.RESISTOR CH1/10W 10K	7	
	VEP86095A	P.C.BOARD W/COMPONENT		
		FR BASE 1		
BT1	VSB0010	BATTERY	1	
		CAPACITORS		
C1	ECUM1H471JCN	C.CAPACITOR CH 50V 470P	1	
C2	ECUM1H473ZFN	C.CAPACITOR CH 50V 0.047U	1	
C3	ECQB1H472JF	P.CAPACITOR 50V 4700P	1	
C4	ECA1EXLV221X	E.CAPACITOR 25V 220U	1	
C5	ECA1CXS470	E.CAPACITOR 16V 47U	1	
C6	ECA1VXLV221	E.CAPACITOR 50V 220U	1	
C7	ECA1AXLV471X	E.CAPACITOR 10V 470U	1	
C8	ECUM1E104ZFN	E.CAPACITOR 25V 0.1U	1	
C9	ECUM1H150JCN	C.CAPACITOR CH 50V 15P	1	
C10	ECUM1E104ZFN	E.CAPACITOR 25V 0.1U	1	
C11	ECUM1H472KBN	C.CAPACITOR CH 50V 4700P	1	
C12-27	ECUM1E104ZFN	E.CAPACITOR 25V 0.1U	16	
C28	ECA1CXLV101	E.CAPACITOR 16V 100U	1	
C29-31	ECUM1E104ZFN	E.CAPACITOR 25V 0.1U	3	
C35	ECCD2H331K2	C.CAPACITOR 500V 330U	1	
C36	ECQB1H102JF	P.CAPACITOR 50V 1000P	1	
C37,38	ECCF1H121JC	C.CAPACITOR 50V 120P	2	
D1	D8LCA20	DIODE	1	
D2	MA752A	DIODE	1	
D3	MA3120	DIODE	1	
D4	ERB35-02	DIODE	1	
D5	MA151K	DIODE	1	
D6	HZ3ALL	DIODE	1	
D7	11ES1	DIODE	1	
D8	MA151K	DIODE	1	
IC1	UPC494GS	IC	1	
IC2	HD63484PS8	IC	1	
IC3,C4	M5256BFP-70	IC	2	
IC5-C9	MC74HC574AF	IC	5	
IC10	MC74HC574AF	IC	1	
IC11,12	MC74HCT245AF	IC	2	
IC13	HD74HC674P	IC	1	
IC14	VSI0906	IC	1	
IC15	VSI0907	IC	1	
IC16	MC74HC04AF	IC	1	
IC17	HD146818AFP	IC	1	
IC18,19	SN74ALS245AS	IC	2	
IC20	MAX690CPA	IC	1	
IC21	AM26LS32M	IC	1	
IC22	AM26LS31M	IC	1	
IC14S	VJS3096328	CONNECTOR (FEMALE)	1	
IC15S	VJS3096328	CONNECTOR (FEMALE)	1	
J301	VJP3008	CONNECTOR (MALE)	1	

Ref.No.	Part No.	Part Name & Description	Pcs	Remarks
L1	VLQ0504821K	COIL 820UH	1	
L2	VLQ0504680K	COIL 68UH	1	
L3	BNX002-01	COIL H	1	
L4	VLT0637	COIL	1	
P304	VJP1245T	CONNECTOR (MALE)	1	
P305	VJP3098B060	CONNECTOR (MALE)	1	
P331	VJP1248T	CONNECTOR (MALE)	1	
P332	VJP1248R	CONNECTOR (MALE)	1	
Q1	2SB710A	TRANSISTOR	1	
Q2	2SK1034	TRANSISTOR	1	
Q3	2SB709	TRANSISTOR	1	
		RESISTORS		
R1	ERJ6GEYJ103	M.RESISTOR CH1/10W 10K	1	
R2	ERJ6GEYF472	M.RESISTOR CH1/10W 4.7K	1	
R3,R4	ERJ6GEYJ222	M.RESISTOR CH1/10W 2.2K	2	
R5	ERJ6GEYJ102	M.RESISTOR CH1/10W 1K	1	
R6	ERG2SJ680U	M.RESISTOR 2W 68	1	
R7	ERG2SJ820U	M.RESISTOR 2W 82	1	
R8	ERG2SJ471	M.RESISTOR 2W 470	1	
R9	ERJ6GEYJ102	M.RESISTOR CH1/10W 1K	1	
R10,11	ERJ6GEYJ392	M.RESISTOR CH1/10W 3.9K	2	
R12	ERJ6GEYG153	M.RESISTOR CH1/10W 15K	1	
R13	ERJ6GEYJ393	M.RESISTOR CH1/10W 39K	1	
R14	ERJ6GEYJ681	M.RESISTOR CH1/10W 680	1	
R15	ERJ6GEYJ104	M.RESISTOR CH1/10W 100K	1	
R16	ERJ6GEYJ222	M.RESISTOR CH1/10W 2.2K	1	
R17,18	ERJ6GEYF472	M.RESISTOR CH1/10W 4.7K	2	
R19	ERJ6GEYJ561	M.RESISTOR CH1/10W 560	1	
R20	ERDS2TJ391	C.RESISTOR 1/4W 390	1	
R21	ERDS2TJ470	C.RESISTOR 1/4W 47	1	
R22,23	ERJ6GEYJ103	M.RESISTOR CH1/10W 10K	2	
RA1-A6	EXBF9E223J	COMBI.R-R 22K	6	
RA7	EXBF5E223J	COMBI.R-R 22K	1	
RA8,A9	EXBF5E331J	COMBI.R-R 330	2	
RA10,11	EXBF5E681J	COMBI.R-R 680	2	
SP1	VSQ0558	BUZZER	1	
TP1-P9	VJR0646	TEST POINT	9	
TPG1,G2	VJR0646	TEST POINT	2	
VC1	ECV1ZW20X53T	E.CAPACITOR 50V 20P	1	
VR1	VRV0109B102	V.RESISTOR 1K	1	
X1	VSX0071	CRYSTAL OSCILLATOR	1	
	VEP86096D	P.C.BOARD W/COMPONENT		
		FR BASE 2		

HEAD PHONE JACK 1 VEP80588A

Ref.No.	Part No.	Part Name & Description	Pcs	Remarks
		CAPACITORS		
C1,C2	ECQB1H333JF	P.CAPACITOR 50V 0.033U	2	
C3	ECQB1H103JF	P.CAPACITOR 50V 0.01U	1	
C4	ECQB1H104JF	P.CAPACITOR 50V 0.1U	1	
C5,C6	ECUM1H330JCN	C.CAPACITOR CH 50V 33P	2	
C7-C9	ECUM1E104ZFN	E.CAPACITOR 25V 0.1U	3	
C10-39	ECUM1E104ZFN	E.CAPACITOR 25V 0.1U	30	
C40	ECA1AXS680	E.CAPACITOR 10V 68U	1	
C41	ECA1HXS100	E.CAPACITOR 50V 10U	1	
C42	ECUM1E104ZFN	E.CAPACITOR 25V 0.1U	1	
C43,44	ECCF1H121JC	C.CAPACITOR 50V 120P	2	
C50	ECKF1H471KB	C.CAPACITOR 50V 470P	1	
D1	MA151K	DIODE	1	
IC1	MC74HC08AF	IC	1	
IC2-C4	MC74HC244AF	IC	3	
IC5,C6	MC74HC4040F	IC	2	
IC7	MC74HC04AF	IC	1	
IC8	MC74HC74AF	IC	1	
IC9	MC74HC164F	IC	1	
IC10	MC74HC74AF	IC	1	
IC11	MC74HC32AF	IC	1	
IC12	MC74HC165F	IC	1	
IC13	TC74HC4094AF	IC	1	
IC14	UPD71054GB	IC	1	
IC15	MB89363BPF	IC	1	
IC16	MC74HC00AF	IC	1	
IC17,18	VSI0908	IC	2	
IC19	MC74HC14AF	IC	1	
IC20	MC74HCU04F	IC	1	
IC21	HD68HC000PS1	IC	1	
IC22	VSI1034K	IC	1	
IC23	VSI1035K	IC	1	
IC24,25	M5256BFP-70	IC	2	
IC26	VSI0903	IC	1	
IC27	VSI0904	IC	1	
IC28	VSI1038	IC	1	
IC29	MC74HC164F	IC	1	
IC30	MB8421-90LPF	IC	1	
IC31	TC74HC148AF	IC	1	
IC32	SN74ALS244BS	IC	1	
IC17S	VJS3096328	CONNECTOR (FEMALE)	1	
IC18S	VJS3096328	CONNECTOR (FEMALE)	1	
IC21S	VJS3111	CONNECTOR (FEMALE)	1	
IC22S	VJS3110	CONNECTOR (FEMALE)	1	
IC23S	VJS3110	CONNECTOR (FEMALE)	1	
IC26S	VJS2575	CONNECTOR (FEMALE)	1	
IC27S	VJS2575	CONNECTOR (FEMALE)	1	
IC28S	VJS2575	CONNECTOR (FEMALE)	1	
P301	VJP1152	CONNECTOR (MALE)	1	
P302	VJP1244T	CONNECTOR (MALE)	1	
P333	VJP3091	CONNECTOR (MALE)	1	
P334	VJP3098B060	CONNECTOR (MALE)	1	
Q1	2SD946A	TRANSISTOR	1	
Q2-Q4	UN2111	TRANSISTOR	3	
Q5	2SD601	TRANSISTOR	1	
Q6,Q7	UN2214	TRANSISTOR	2	

Ref.No.	Part No.	Part Name & Description	Pcs	Remarks
		RESISTORS		
R1,R2	ERJ6GEYJ103	M.RESISTOR CH1/10W 10K	2	
R3	ERJ6GEYG153	M.RESISTOR CH1/10W 15K	1	
R4,R5	ERJ6GEYF472	M.RESISTOR CH1/10W 4.7K	2	
R6,R7	ERJ6GEYJ332	M.RESISTOR CH1/10W 3.3K	2	
R8	ERJ6GEYJ473	M.RESISTOR CH1/10W 47K	1	
R9	ERJ6GEYJ562	M.RESISTOR CH1/10W 5.6K	1	
R10	ERJ6GEYF472	M.RESISTOR CH1/10W 4.7K	1	
R11	ERJ6GEYJ473	M.RESISTOR CH1/10W 47K	1	
R12	ERJ6GEYJ103	M.RESISTOR CH1/10W 10K	1	
R13	ERJ6GEYJ222	M.RESISTOR CH1/10W 2.2K	1	
R14	ERJ6GEYF333	M.RESISTOR CH1/10W 33K	1	
R15	ERJ6GEYJ104	M.RESISTOR CH1/10W 100K	1	
R16	ERJ6GEYJ470	M.RESISTOR CH1/10W 47	1	
R17	ERJ6GEYJ223	M.RESISTOR CH1/10W 22K	1	
R18-21	ERJ6GEYF472	M.RESISTOR CH1/10W 4.7K	4	
R22	ERJ6GEYJ104	M.RESISTOR CH1/10W 100K	1	
R23	ERJ6GEYJ681	M.RESISTOR CH1/10W 680	1	
R24,25	ERJ6GEYJ561	M.RESISTOR CH1/10W 560	2	
R26	ERJ6GEYJ182	M.RESISTOR CH1/10W 1.8K	1	
R27	ERJ6GEYF472	M.RESISTOR CH1/10W 4.7K	1	
R50	ERDS2TJ102	C.RESISTOR 1/4W 1K	1	
RA1	EXBF9E472J	COMBI.R-R 4.7K	1	
RA2	EXBF5E472J	COMBI.R-R 4.7K	1	
RA3,A4	EXBF9E472J	COMBI.R-R 4.7K	2	
RA5	EXBF5E472J	COMBI.R-R 4.7K	1	
SW1	VSS023706	SWITCH	1	
SW3	EVQQS205K	SWITCH	1	
VR1	VRV0109B103	V.RESISTOR 10K	1	
VR2	VRV0109B503	V.RESISTOR 50K	1	
X1	VSX0451	CRYSTAL OSCILLATOR	1	
	VEP80588A	P.C.BOARD W/COMPONENT HEAD PHONE JACK 1		
		CAPACITORS		
C9001	ECA1CXLV101	E.CAPACITOR 16V 100U	1	
C9002,03	ECQV1H104JZ	P.CAPACITOR 50V 0.1U	2	
J303	VJJ0150	HEADPHONE JACK	1	
P341	VJP1232T	CONNECTOR (MALE)	1	
		RESISTORS		

REMOTE JACK 1 VEP80590A
REMOTE JACK 2 VEP80609A

Ref.No.	Part No.	Part Name & Description	Pcs	Remarks
R9001	ERDS2TJ100	C.RESISTOR 1/4W 10	1	
VR9001	EVUKEAF20A14	V.RESISTOR 10K	1	
	VEP80590A	P.C.BOARD W/COMPONENT		
		REMOTE JACK 1		
		CAPACITORS		
C001-07	ECUM1E104ZFN	E.CAPACITOR 25V 0.1U	7	
C008-17	ECUM1H103ZFN	C.CAPACITOR CH 50V 0.01U	10	
IC001-03	MC10H125	IC	3	
IC004	74F827SC	IC	1	
IC005-08	SN74S1051NS	DIODE	4	
J433,34	VJS2642A025	CONNECTOR (FEMALE)	2	
J436,37	VJS2642A015	CONNECTOR (FEMALE)	2	
J438-40	VJS2642A009	CONNECTOR (FEMALE)	3	
J441	VJS2642A025	CONNECTOR (FEMALE)	1	
P441	VJP3010A040	CONNECTOR (MALE)	1	
P442	VJP3083	CONNECTOR (MALE)	1	
P443	VJP3078	CONNECTOR (MALE)	1	
P444	VJP3080	CONNECTOR (MALE)	1	
P445	VJP3079	CONNECTOR (MALE)	1	
P449,50	VJP1230T	CONNECTOR (MALE)	2	
P452	VJP3083	CONNECTOR (MALE)	1	
P486	VJP1232T	CONNECTOR (MALE)	1	
P487	VJP3078	CONNECTOR (MALE)	1	
P488	VJP1230T	CONNECTOR (MALE)	1	
		RESISTORS		
R011-20	ERJ6GEYJ101	M.RESISTOR CH1/10W 100	10	
R021	ERJ6GEY0R00	M.RESISTOR CH 1/10W 0	1	
R022-41	ERJ6GEYJ510	M.RESISTOR CH1/10W 51	20	
		MISCELLANEOUS		
	VMP3093	P.C.BOARD HOLDER ANGLE	1	
	VXQ0102	BOSS	12	
	VXQ0328	BOSS	4	
	VEP80609A	P.C.BOARD W/COMPONENT		
		REMOTE JACK 2		

REMOTE JACK 3 VEP80589A
VIDEO IN/OUT VEP88075B

Ref.No.	Part No.	Part Name & Description	Pcs	Remarks
		CAPACITORS		
C1	ECUM1E224ZFM	C.CAPACITOR CH 25V 0.22U	1	
IC1	MB89363BPF	IC	1	
IC2	MC74HC138AF	IC	1	
J435	VJS3017	CONNECTOR (FEMALE)	1	
L1	VLF0931	FILTER	1	
P451	VJP3098B026	CONNECTOR (MALE)	1	
Q1-Q9	UN2213	TRANSISTOR	9	
Q10-18	UN2213	TRANSISTOR	9	
Q19-23	DTC144EK	TRANSISTOR	5	
		RESISTORS		
R1-R9	ERJ6GEYJ103	M.RESISTOR CH1/10W 10K	9	
R10-48	ERJ6GEYJ103	M.RESISTOR CH1/10W 10K	39	
	VEP80589A	P.C.BOARD W/COMPONENT		
		REMOTE JACK 3		
J443	VJP3008	CONNECTOR (MALE)	1	
P455	VJP3080	CONNECTOR (MALE)	1	
P456	VJP1235T	CONNECTOR (MALE)	1	
	VEP88075B	P.C.BOARD W/COMPONENT		
		VIDEO IN/OUT		
		CAPACITORS		
C1	ECA1CXLV470	E.CAPACITOR 16V 47U	1	
C2	ECUM1E104ZFN	E.CAPACITOR 25V 0.1U	1	
C3,C4	ECA1CXLV470	E.CAPACITOR 16V 47U	2	
C5	ECUM1E104ZFN	E.CAPACITOR 25V 0.1U	1	
C6	ECA1CXLV470	E.CAPACITOR 16V 47U	1	
C10-12	ECUM1H104ZFN	C.CAPACITOR CH 50V 0.1U	3	

AUDIO IN/OUT MONITOR VEP84122A

Ref.No.	Part No.	Part Name & Description	Pcs	Remarks
D1,D2	MA151K	DIODE	2	
IC1	AN78L09	IC	1	
IC2	AN79L09	IC	1	
P431	VJP2739B010	CONNECTOR (MALE)	1	
P432	VJP1248T	CONNECTOR (MALE)	1	
P433	VJP1243T	CONNECTOR (MALE)	1	
P434	VJP1244T	CONNECTOR (MALE)	1	
Q1	2SA1254	TRANSISTOR	1	
Q2	2SC2188	TRANSISTOR	1	
Q3	2SA1254	TRANSISTOR	1	
Q4	2SC2188	TRANSISTOR	1	
		RESISTORS		
R1,R2	VRE0034E750	M.RESISTOR CH 1/10W 75	2	
R3	ERJ6GEYJ334	M.RESISTOR CH1/10W 330K	1	
R4	ERJ6GEYJ332	M.RESISTOR CH1/10W 3.3K	1	
R5	ERJ6GEYJ221	M.RESISTOR CH1/10W 220	1	
R6	ERJ6GEYJ470	M.RESISTOR CH1/10W 47	1	
R7	ERJ6GEYJ102	M.RESISTOR CH1/10W 1K	1	
R8	ERJ6GEYJ330	M.RESISTOR CH1/10W 33	1	
R9	ERJ6GEYJ334	M.RESISTOR CH1/10W 330K	1	
R10	ERJ6GEYJ332	M.RESISTOR CH1/10W 3.3K	1	
R11,12	ERJ6GEYJ470	M.RESISTOR CH1/10W 47	2	
R13	ERJ6GEYJ102	M.RESISTOR CH1/10W 1K	1	
R14	ERJ6GEYJ330	M.RESISTOR CH1/10W 33	1	
R15,16	ERJ6GEYJ100	M.RESISTOR CH1/10W 10	2	
R17,18	ERJ6GEYG151	M.RESISTOR CH1/10W 150	2	
SW1,W2	VSS0119	SWITCH	2	
	VEP84122A	P.C.BOARD W/COMPONENT AUDIO IN/OUT MONITOR		
		CAPACITORS		
C4001	ECEA1EBZ470	E.CAPACITOR 25V 47U	1	
C4002,03	ECEA1EBZ100	E.CAPACITOR 25V 10U	2	
C4004	ECEA1EBZ470	E.CAPACITOR 25V 47U	1	
C4005,06	ECEA1EBZ100	E.CAPACITOR 25V 10U	2	
C4011-14	ECEA1EPZ221	E.CAPACITOR 25V 220U	4	
C4015-18	ECEA1EPZ101	E.CAPACITOR 25V 100U	4	
C4021-34	ECUM1H103ZFN	C.CAPACITOR CH 50V 0.01U	14	
C4041-44	ECCF1H220JC	C.CAPACITOR 50V 22P	4	
D4001-04	MA151K	DIODE	4	
IC4001-04	NJM5532MD	IC	4	

Ref.No.	Part No.	Part Name & Description	Pcs	Remarks
P461	VJP3083	CONNECTOR (MALE)	1	
P462	VJP1230T	CONNECTOR (MALE)	1	
P463	VJP3083	CONNECTOR (MALE)	1	
P464	VJP1230T	CONNECTOR (MALE)	1	
P465	VJP1234T	CONNECTOR (MALE)	1	
P466	VJP1231T	CONNECTOR (MALE)	1	
P467	VJP1230T	CONNECTOR (MALE)	1	
P468	VJP1234T	CONNECTOR (MALE)	1	
P469	VJP1231T	CONNECTOR (MALE)	1	
Q4001	UN2213	TRANSISTOR	1	
Q4002	2SD601-R	TRANSISTOR	1	
Q4003	UN2213	TRANSISTOR	1	
Q4004	2SD601-R	TRANSISTOR	1	
Q4006	UN2213	TRANSISTOR	1	
Q4007,08	2SD601-R	TRANSISTOR	2	
Q4009	2SD602	TRANSISTOR	1	
Q4010	2SB710	TRANSISTOR	1	
		RESISTORS		
R4001	ERJ6GEYJ104	M.RESISTOR CH1/10W 100K	1	
R4002-04	ERJ6GEYJ103	M.RESISTOR CH1/10W 10K	3	
R4005	ERJ6GEYJ104	M.RESISTOR CH1/10W 100K	1	
R4006	ERJ6GEYF472	M.RESISTOR CH1/10W 4.7K	1	
R4007	ERJ6GEY0R00	M.RESISTOR CH 1/10W 0	1	
R4008,09	ERJ6GEYJ104	M.RESISTOR CH1/10W 100K	2	
R4010-12	ERJ6GEYJ103	M.RESISTOR CH1/10W 10K	3	
R4013	ERJ6GEYJ104	M.RESISTOR CH1/10W 100K	1	
R4014	ERJ6GEYF472	M.RESISTOR CH1/10W 4.7K	1	
R4015	ERJ6GEY0R00	M.RESISTOR CH 1/10W 0	1	
R4016	ERJ6GEYJ104	M.RESISTOR CH1/10W 100K	1	
R4017	VRE0034E152	M.RESISTOR CH 1/10W 1.5K	1	
R4018	VRE0034E151	M.RESISTOR CH 1/10W 150	1	
R4019	VRE0034E332	M.RESISTOR CH 1/10W 3.3K	1	
R4020	VRE0034E181	M.RESISTOR CH 1/10W 180	1	
R4021	VRE0034E152	M.RESISTOR CH 1/10W 1.5K	1	
R4022	VRE0034E151	M.RESISTOR CH 1/10W 150	1	
R4023	VRE0034E332	M.RESISTOR CH 1/10W 3.3K	1	
R4024	VRE0034E181	M.RESISTOR CH 1/10W 180	1	
R4025,26	ERJ6GEYJ103	M.RESISTOR CH1/10W 10K	2	
R4027	VRE0034E152	M.RESISTOR CH 1/10W 1.5K	1	
R4028,29	VRE0034E332	M.RESISTOR CH 1/10W 3.3K	2	
R4030,31	VRE0034E223	M.RESISTOR CH 1/10W 22K	2	
R4032	ERJ6GEYJ220	M.RESISTOR CH1/10W 22	1	
R4033,34	VRE0034E332	M.RESISTOR CH 1/10W 3.3K	2	
R4035,36	VRE0034E223	M.RESISTOR CH 1/10W 22K	2	
R4037	ERJ6GEYJ220	M.RESISTOR CH1/10W 22	1	
R4038	ERJ6GEYJ473	M.RESISTOR CH1/10W 47K	1	
R4039	ERJ6GEYJ681	M.RESISTOR CH1/10W 680	1	
R4040	ERJ6GEYJ331	M.RESISTOR CH1/10W 330	1	
R4041	VRE0034E152	M.RESISTOR CH 1/10W 1.5K	1	
R4042,43	VRE0034E332	M.RESISTOR CH 1/10W 3.3K	2	
R4044,45	VRE0034E223	M.RESISTOR CH 1/10W 22K	2	
R4046	ERJ6GEYJ220	M.RESISTOR CH1/10W 22	1	
R4047,48	VRE0034E332	M.RESISTOR CH 1/10W 3.3K	2	
R4049,50	VRE0034E223	M.RESISTOR CH 1/10W 22K	2	
R4051	ERJ6GEYJ220	M.RESISTOR CH1/10W 22	1	
R4052	ERJ6GEYJ473	M.RESISTOR CH1/10W 47K	1	
R4053	ERJ6GEYJ681	M.RESISTOR CH1/10W 680	1	
R4054	ERJ6GEYJ331	M.RESISTOR CH1/10W 330	1	
R4056	ERJ6GEYJ103	M.RESISTOR CH1/10W 10K	1	
R4057	ERJ6GEY0R00	M.RESISTOR CH 1/10W 0	1	
R4059	ERJ6GEY0R00	M.RESISTOR CH 1/10W 0	1	
R4061	ERJ6GEY0R00	M.RESISTOR CH 1/10W 0	1	
R4063	ERJ6GEY0R00	M.RESISTOR CH 1/10W 0	1	
R4071,72	VRE0034E680	M.RESISTOR CH 1/10W 68	2	
R4073-76	ERJ6GEYJ103	M.RESISTOR CH1/10W 10K	4	
R4101-24	ERJ6GEY0R00	M.RESISTOR CH 1/10W 0	24	

DIGITAL AUDIO IN VEP84125A
DIGITAL AUDIO OUT VEP84126A

Ref.No.	Part No.	Part Name & Description	Pcs	Remarks
RY4001-04	VSY2039	RELAY	4	
SW4001	VSS0108	SWITCH	1	
	VEP84125A	P.C.BOARD W/COMPONENT		
		DIGITAL AUDIO IN		
P470	VJP1246T	CONNECTOR (MALE)	1	
	VEP84126A	P.C.BOARD W/COMPONENT		
		DIGITAL AUDIO OUT		
P471	VJP1246R	CONNECTOR (MALE)	1	
	VEP84110B	P.C.BOARD W/COMPONENT		
		AUDIO IN/OUT		
		CAPACITORS		
C4003,04	ECUM1H470JCN	C.CAPACITOR CH 50V 47P	2	
C4007,08	ECUM1H470JCN	C.CAPACITOR CH 50V 47P	2	
C4011,12	ECUM1H470JCN	C.CAPACITOR CH 50V 47P	2	
C4015,16	ECUM1H470JCN	C.CAPACITOR CH 50V 47P	2	
C4019,20	ECUM1H470JCN	C.CAPACITOR CH 50V 47P	2	
C4021-24	ECEA1CPZ101	E.CAPACITOR 16V 100U	4	
C4201	ECEA1EBZ470	E.CAPACITOR 25V 47U	1	
C4202	ECUM1H470JCN	C.CAPACITOR CH 50V 47P	1	
C4203	ECUM1H122JN	C.CAPACITOR CH 50V 1200P	1	
C4204,05	ECEA1EPZ100	E.CAPACITOR 25V 10U	2	
C4211-14	ECEA1EPZ101	E.CAPACITOR 25V 100U	4	
C4221	ECEA1EBZ470	E.CAPACITOR 25V 47U	1	
C4222	ECUM1H470JCN	C.CAPACITOR CH 50V 47P	1	
C4223	ECUM1H122JN	C.CAPACITOR CH 50V 1200P	1	
C4224,25	ECEA1EPZ100	E.CAPACITOR 25V 10U	2	
C4231-34	ECEA1EPZ101	E.CAPACITOR 25V 100U	4	
C4241	ECEA1EBZ470	E.CAPACITOR 25V 47U	1	
C4242	ECUM1H470JCN	C.CAPACITOR CH 50V 47P	1	
C4243	ECUM1H122JN	C.CAPACITOR CH 50V 1200P	1	
C4244,45	ECEA1EPZ100	E.CAPACITOR 25V 10U	2	
C4251-54	ECEA1EPZ101	E.CAPACITOR 25V 100U	4	
C4261	ECEA1EBZ470	E.CAPACITOR 25V 47U	1	
C4262	ECUM1H470JCN	C.CAPACITOR CH 50V 47P	1	

AUDIO IN/OUT 1 VEP84110B

Ref.No.	Part No.	Part Name & Description	Pcs	Remarks
C4263	ECUM1H122JN	C.CAPACITOR CH 50V 1200P	1	
C4264,65	ECEA1EPZ100	E.CAPACITOR 25V 10U	2	
C4271-74	ECEA1EPZ101	E.CAPACITOR 25V 100U	4	
C4281	ECEA1EBZ470	E.CAPACITOR 25V 47U	1	
C4282	ECUM1H470JCN	C.CAPACITOR CH 50V 47P	1	
C4283	ECUM1H122JN	C.CAPACITOR CH 50V 1200P	1	
C4284,85	ECEA1EPZ100	E.CAPACITOR 25V 10U	2	
C4291-94	ECEA1EPZ101	E.CAPACITOR 25V 100U	4	
C4301	ECUM1H103ZFN	C.CAPACITOR CH 50V 0.01U	1	
C4302	ECUM1E104ZFN	E.CAPACITOR 25V 0.1U	1	
D4201	MA157	DIODE	1	
D4203	MA151K	DIODE	1	
D4204	MA157	DIODE	1	
D4206	MA151K	DIODE	1	
D4207	MA157	DIODE	1	
D4209	MA151K	DIODE	1	
D4210	MA157	DIODE	1	
D4212	MA151K	DIODE	1	
D4213	MA157	DIODE	1	
D4215	MA151K	DIODE	1	
IC4001-05	NJM5532MD	IC	5	
IC4201	NJM5532MD	IC	1	
IC4203	NJM5532MD	IC	1	
IC4205	NJM5532MD	IC	1	
IC4207	NJM5532MD	IC	1	
IC4209	NJM5532MD	IC	1	
IC4211	MC74HC138AF	IC	1	
IC4212	MB89363BPF	IC	1	
P401	VJP1230R	CONNECTOR (MALE)	1	
P402	VJP1230G	CONNECTOR (MALE)	1	
P403	VJP1230T	CONNECTOR (MALE)	1	
P404	VJP1230G	CONNECTOR (MALE)	1	
P405	VJP1230T	CONNECTOR (MALE)	1	
P406	VJP1231T	CONNECTOR (MALE)	1	
P407	VJP1231G	CONNECTOR (MALE)	1	
P408,09	VJP1230T	CONNECTOR (MALE)	2	
P410	VJP1230R	CONNECTOR (MALE)	1	
P411	VJP1230G	CONNECTOR (MALE)	1	
P412	VJP1230T	CONNECTOR (MALE)	1	
P413,14	VJP1230G	CONNECTOR (MALE)	2	
P415	VJP1230R	CONNECTOR (MALE)	1	
P416	VJP1230G	CONNECTOR (MALE)	1	
P417-19	VJP1230T	CONNECTOR (MALE)	3	
P420	VJP1142T	CONNECTOR (MALE)	1	
P421-23	VJP1231T	CONNECTOR (MALE)	3	
P424	VJP3079	CONNECTOR (MALE)	1	
P425	VJP1235T	CONNECTOR (MALE)	1	
Q4001	2SD602	TRANSISTOR	1	
Q4002	2SB710	TRANSISTOR	1	
Q4201	2SD973A-QR	TRANSISTOR	1	
Q4202	2SB793A-QR	TRANSISTOR	1	
Q4205	2SD601-R	TRANSISTOR	1	
Q4206	2SD602	TRANSISTOR	1	
Q4207	2SB710	TRANSISTOR	1	
Q4208	2SD973A-QR	TRANSISTOR	1	
Q4209	2SB793A-QR	TRANSISTOR	1	
Q4212	2SD601-R	TRANSISTOR	1	
Q4213	2SD602	TRANSISTOR	1	
Q4214	2SB710	TRANSISTOR	1	
Q4215	2SD973A-QR	TRANSISTOR	1	
Q4216	2SB793A-QR	TRANSISTOR	1	
Q4219	2SD601-R	TRANSISTOR	1	
Q4220	2SD602	TRANSISTOR	1	

Ref.No.	Part No.	Part Name & Description	Pcs	Remarks
Q4221	2SB710	TRANSISTOR	1	
Q4222	2SD973A-QR	TRANSISTOR	1	
Q4223	2SB793A-QR	TRANSISTOR	1	
Q4226	2SD601-R	TRANSISTOR	1	
Q4227	2SD602	TRANSISTOR	1	
Q4228	2SB710	TRANSISTOR	1	
Q4231	2SD973A-QR	TRANSISTOR	1	
Q4232	2SB793A-QR	TRANSISTOR	1	
Q4235	2SD601-R	TRANSISTOR	1	
Q4236	2SD602	TRANSISTOR	1	
Q4237	2SB710	TRANSISTOR	1	
Q4239	UN2213	TRANSISTOR	1	
		RESISTORS		
R4001	ERG3SJ161	M.RESISTOR 3W 160	1	
R4002	ERG12SJ621	M.RESISTOR 1/2W 620	1	
R4003	VRE0034E122	M.RESISTOR CH 1/10W 1.2K	1	
R4004	VRE0034E750	M.RESISTOR CH 1/10W 75	1	
R4005	VRE0034E681	M.RESISTOR CH 1/10W 680	1	
R4006	VRE0034E560	M.RESISTOR CH 1/10W 56	1	
R4007	VRE0034E391	M.RESISTOR CH 1/10W 390	1	
R4008	VRE0034E510	M.RESISTOR CH 1/10W 51	1	
R4009-14	VRE0034E512	M.RESISTOR CH 1/10W 5.1K	6	
R4015-18	ERJ6GEYJ103	M.RESISTOR CH1/10W 10K	4	
R4020	VRE0034E682	M.RESISTOR CH 1/10W 6.8K	1	
R4021	VRE0034E201	M.RESISTOR CH 1/10W 200	1	
R4022,23	ERJ6GEYJ473	M.RESISTOR CH1/10W 47K	2	
R4024-26	VRE0034E472	M.RESISTOR CH 1/10W 4.7K	3	
R4027	ERG3SJ161	M.RESISTOR 3W 160	1	
R4028	ERG12SJ621	M.RESISTOR 1/2W 620	1	
R4029	VRE0034E122	M.RESISTOR CH 1/10W 1.2K	1	
R4030	VRE0034E750	M.RESISTOR CH 1/10W 75	1	
R4031	VRE0034E681	M.RESISTOR CH 1/10W 680	1	
R4032	VRE0034E560	M.RESISTOR CH 1/10W 56	1	
R4033	VRE0034E391	M.RESISTOR CH 1/10W 390	1	
R4034	VRE0034E510	M.RESISTOR CH 1/10W 51	1	
R4035-40	VRE0034E512	M.RESISTOR CH 1/10W 5.1K	6	
R4041-44	ERJ6GEYJ103	M.RESISTOR CH1/10W 10K	4	
R4046	VRE0034E682	M.RESISTOR CH 1/10W 6.8K	1	
R4047	VRE0034E201	M.RESISTOR CH 1/10W 200	1	
R4048,49	ERJ6GEYJ473	M.RESISTOR CH1/10W 47K	2	
R4050-52	VRE0034E472	M.RESISTOR CH 1/10W 4.7K	3	
R4053	ERG3SJ161	M.RESISTOR 3W 160	1	
R4054	ERG12SJ621	M.RESISTOR 1/2W 620	1	
R4055	VRE0034E122	M.RESISTOR CH 1/10W 1.2K	1	
R4056	VRE0034E750	M.RESISTOR CH 1/10W 75	1	
R4057	VRE0034E681	M.RESISTOR CH 1/10W 680	1	
R4058	VRE0034E560	M.RESISTOR CH 1/10W 56	1	
R4059	VRE0034E391	M.RESISTOR CH 1/10W 390	1	
R4060	VRE0034E510	M.RESISTOR CH 1/10W 51	1	
R4061-66	VRE0034E512	M.RESISTOR CH 1/10W 5.1K	6	
R4067-70	ERJ6GEYJ103	M.RESISTOR CH1/10W 10K	4	
R4072	VRE0034E682	M.RESISTOR CH 1/10W 6.8K	1	
R4073	VRE0034E201	M.RESISTOR CH 1/10W 200	1	
R4074,75	ERJ6GEYJ473	M.RESISTOR CH1/10W 47K	2	
R4076-78	VRE0034E472	M.RESISTOR CH 1/10W 4.7K	3	
R4079	ERG3SJ161	M.RESISTOR 3W 160	1	
R4080	ERG12SJ621	M.RESISTOR 1/2W 620	1	
R4081	VRE0034E122	M.RESISTOR CH 1/10W 1.2K	1	
R4082	VRE0034E750	M.RESISTOR CH 1/10W 75	1	
R4083	VRE0034E681	M.RESISTOR CH 1/10W 680	1	
R4084	VRE0034E560	M.RESISTOR CH 1/10W 56	1	
R4085	VRE0034E391	M.RESISTOR CH 1/10W 390	1	
R4086	VRE0034E510	M.RESISTOR CH 1/10W 51	1	
R4087-92	VRE0034E512	M.RESISTOR CH 1/10W 5.1K	6	
R4093-96	ERJ6GEYJ103	M.RESISTOR CH1/10W 10K	4	
R4098	VRE0034E682	M.RESISTOR CH 1/10W 6.8K	1	
R4099	VRE0034E201	M.RESISTOR CH 1/10W 200	1	
R4100,01	ERJ6GEYJ473	M.RESISTOR CH1/10W 47K	2	
R4102-04	VRE0034E472	M.RESISTOR CH 1/10W 4.7K	3	
R4105	ERG3SJ161	M.RESISTOR 3W 160	1	
R4106	ERG12SJ621	M.RESISTOR 1/2W 620	1	
R4107	VRE0034E122	M.RESISTOR CH 1/10W 1.2K	1	

Ref.No.	Part No.	Part Name & Description	Pcs	Remarks
R4108	VRE0034E750	M.RESISTOR CH 1/10W 75	1	
R4109	VRE0034E681	M.RESISTOR CH 1/10W 680	1	
R4110	VRE0034E560	M.RESISTOR CH 1/10W 56	1	
R4111	VRE0034E391	M.RESISTOR CH 1/10W 390	1	
R4112	VRE0034E510	M.RESISTOR CH 1/10W 51	1	
R4113-18	VRE0034E512	M.RESISTOR CH 1/10W 5.1K	6	
R4119-22	ERJ6GEYJ103	M.RESISTOR CH1/10W 10K	4	
R4124	VRE0034E682	M.RESISTOR CH 1/10W 6.8K	1	
R4125	VRE0034E201	M.RESISTOR CH 1/10W 200	1	
R4126,27	ERJ6GEYJ473	M.RESISTOR CH1/10W 47K	2	
R4128	ERJ6GEYJ103	M.RESISTOR CH1/10W 10K	1	
R4129	VRE0034E330	M.RESISTOR CH 1/10W 33	1	
R4130-32	VRE0034E472	M.RESISTOR CH 1/10W 4.7K	3	
R4133,34	ERJ6GEYJ331	M.RESISTOR CH1/10W 330	2	
R4201	VRE0034E122	M.RESISTOR CH 1/10W 1.2K	1	
R4202	VRE0034E302	M.RESISTOR CH 1/10W 3K	1	
R4203	VRE0034E181	M.RESISTOR CH 1/10W 180	1	
R4204	VRE0034E622	M.RESISTOR CH 1/10W 6.2K	1	
R4205	VRE0034E151	M.RESISTOR CH 1/10W 150	1	
R4206	VRE0034E823	M.RESISTOR CH 1/10W 82K	1	
R4207	VRE0034E122	M.RESISTOR CH 1/10W 1.2K	1	
R4208-11	ERJ6GEYJ103	M.RESISTOR CH1/10W 10K	4	
R4212	VRE0034E222	M.RESISTOR CH 1/10W 2.2K	1	
R4213	ERJ6GEYF472	M.RESISTOR CH1/10W 4.7K	1	
R4214	ERJ6GEY0R00	M.RESISTOR CH 1/10W 0	1	
R4215	ERJ6GEYJ103	M.RESISTOR CH1/10W 10K	1	
R4216	ERJ6GEY0R00	M.RESISTOR CH 1/10W 0	1	
R4217	ERJ6GEYJ102	M.RESISTOR CH1/10W 1K	1	
R4218	ERJ6GEYJ105	M.RESISTOR CH1/10W 1M	1	
R4219	ERJ6GEYF472	M.RESISTOR CH1/10W 4.7K	1	
R4220	ERJ6GEYJ122	M.RESISTOR CH1/10W 1.2K	1	
R4223	ERJ6GEYJ100	M.RESISTOR CH1/10W 10	1	
R4224,25	ERJ6GEYJ562	M.RESISTOR CH1/10W 5.6K	2	
R4226,27	ERDS2TJ100	C.RESISTOR 1/4W 10	2	
R4229	ERJ6GEYJ103	M.RESISTOR CH1/10W 10K	1	
R4243	ERJ6GEYJ103	M.RESISTOR CH1/10W 10K	1	
R4244	ERJ6GEYJ473	M.RESISTOR CH1/10W 47K	1	
R4245	ERJ6GEYJ681	M.RESISTOR CH1/10W 680	1	
R4246,47	ERJ6GEYJ331	M.RESISTOR CH1/10W 330	2	
R4248	ERJ6GEYJ470	M.RESISTOR CH1/10W 47	1	
R4251	VRE0034E122	M.RESISTOR CH 1/10W 1.2K	1	
R4252	VRE0034E302	M.RESISTOR CH 1/10W 3K	1	
R4253	VRE0034E181	M.RESISTOR CH 1/10W 180	1	
R4254	VRE0034E622	M.RESISTOR CH 1/10W 6.2K	1	
R4255	VRE0034E151	M.RESISTOR CH 1/10W 150	1	
R4256	VRE0034E823	M.RESISTOR CH 1/10W 82K	1	
R4257	VRE0034E122	M.RESISTOR CH 1/10W 1.2K	1	
R4258-61	ERJ6GEYJ103	M.RESISTOR CH1/10W 10K	4	
R4262	VRE0034E222	M.RESISTOR CH 1/10W 2.2K	1	
R4263	ERJ6GEYF472	M.RESISTOR CH1/10W 4.7K	1	
R4264	ERJ6GEY0R00	M.RESISTOR CH 1/10W 0	1	
R4265	ERJ6GEYJ103	M.RESISTOR CH1/10W 10K	1	
R4266	ERJ6GEY0R00	M.RESISTOR CH 1/10W 0	1	
R4267	ERJ6GEYJ102	M.RESISTOR CH1/10W 1K	1	
R4268	ERJ6GEYJ105	M.RESISTOR CH1/10W 1M	1	
R4269	ERJ6GEYF472	M.RESISTOR CH1/10W 4.7K	1	
R4270	ERJ6GEYJ122	M.RESISTOR CH1/10W 1.2K	1	
R4273	ERJ6GEYJ100	M.RESISTOR CH1/10W 10	1	
R4274,75	ERJ6GEYJ562	M.RESISTOR CH1/10W 5.6K	2	
R4276,77	ERDS2TJ100	C.RESISTOR 1/4W 10	2	
R4279	ERJ6GEYJ103	M.RESISTOR CH1/10W 10K	1	
R4293	ERJ6GEYJ103	M.RESISTOR CH1/10W 10K	1	
R4294	ERJ6GEYJ473	M.RESISTOR CH1/10W 47K	1	
R4295	ERJ6GEYJ681	M.RESISTOR CH1/10W 680	1	
R4296,97	ERJ6GEYJ331	M.RESISTOR CH1/10W 330	2	
R4298	ERJ6GEYJ470	M.RESISTOR CH1/10W 47	1	
R4301	VRE0034E122	M.RESISTOR CH 1/10W 1.2K	1	
R4302	VRE0034E302	M.RESISTOR CH 1/10W 3K	1	
R4303	VRE0034E181	M.RESISTOR CH 1/10W 180	1	
R4304	VRE0034E622	M.RESISTOR CH 1/10W 6.2K	1	
R4305	VRE0034E151	M.RESISTOR CH 1/10W 150	1	
R4306	VRE0034E823	M.RESISTOR CH 1/10W 82K	1	
R4307	VRE0034E122	M.RESISTOR CH 1/10W 1.2K	1	
R4308-11	ERJ6GEYJ103	M.RESISTOR CH1/10W 10K	4	
R4312	VRE0034E222	M.RESISTOR CH 1/10W 2.2K	1	

MECHA I/F VEP80592A

Ref.No.	Part No.	Part Name & Description	Pcs	Remarks
R4313	ERJ6GEYF472	M.RESISTOR CH1/10W 4.7K	1	
R4314	ERJ6GEY0R00	M.RESISTOR CH 1/10W 0	1	
R4315	ERJ6GEYJ103	M.RESISTOR CH1/10W 10K	1	
R4316	ERJ6GEY0R00	M.RESISTOR CH 1/10W 0	1	
R4317	ERJ6GEYJ102	M.RESISTOR CH1/10W 1K	1	
R4318	ERJ6GEYJ105	M.RESISTOR CH1/10W 1M	1	
R4319	ERJ6GEYF472	M.RESISTOR CH1/10W 4.7K	1	
R4320	ERJ6GEYJ122	M.RESISTOR CH1/10W 1.2K	1	
R4323	ERJ6GEYJ100	M.RESISTOR CH1/10W 10	1	
R4324,25	ERJ6GEYJ562	M.RESISTOR CH1/10W 5.6K	2	
R4326,27	ERDS2TJ100	C.RESISTOR 1/4W 10	2	
R4329	ERJ6GEYJ103	M.RESISTOR CH1/10W 10K	1	
R4343	ERJ6GEYJ103	M.RESISTOR CH1/10W 10K	1	
R4344	ERJ6GEYJ473	M.RESISTOR CH1/10W 47K	1	
R4345	ERJ6GEYJ681	M.RESISTOR CH1/10W 680	1	
R4346,47	ERJ6GEYJ331	M.RESISTOR CH1/10W 330	2	
R4348	ERJ6GEYJ470	M.RESISTOR CH1/10W 47	1	
R4351	VRE0034E122	M.RESISTOR CH 1/10W 1.2K	1	
R4352	VRE0034E302	M.RESISTOR CH 1/10W 3K	1	
R4353	VRE0034E181	M.RESISTOR CH 1/10W 180	1	
R4354	VRE0034E622	M.RESISTOR CH 1/10W 6.2K	1	
R4355	VRE0034E151	M.RESISTOR CH 1/10W 150	1	
R4356	VRE0034E823	M.RESISTOR CH 1/10W 82K	1	
R4357	VRE0034E122	M.RESISTOR CH 1/10W 1.2K	1	
R4358-61	ERJ6GEYJ103	M.RESISTOR CH1/10W 10K	4	
R4362	VRE0034E222	M.RESISTOR CH 1/10W 2.2K	1	
R4363	ERJ6GEYF472	M.RESISTOR CH1/10W 4.7K	1	
R4364	ERJ6GEY0R00	M.RESISTOR CH 1/10W 0	1	
R4365	ERJ6GEYJ103	M.RESISTOR CH1/10W 10K	1	
R4366	ERJ6GEY0R00	M.RESISTOR CH 1/10W 0	1	
R4367	ERJ6GEYJ102	M.RESISTOR CH1/10W 1K	1	
R4368	ERJ6GEYJ105	M.RESISTOR CH1/10W 1M	1	
R4369	ERJ6GEYF472	M.RESISTOR CH1/10W 4.7K	1	
R4370	ERJ6GEYJ122	M.RESISTOR CH1/10W 1.2K	1	
R4373	ERJ6GEYJ100	M.RESISTOR CH1/10W 10	1	
R4374,75	ERJ6GEYJ562	M.RESISTOR CH1/10W 5.6K	2	
R4376,77	ERDS2TJ100	C.RESISTOR 1/4W 10	2	
R4379	ERJ6GEYJ103	M.RESISTOR CH1/10W 10K	1	
R4393	ERJ6GEYJ103	M.RESISTOR CH1/10W 10K	1	
R4394	ERJ6GEYJ473	M.RESISTOR CH1/10W 47K	1	
R4395	ERJ6GEYJ681	M.RESISTOR CH1/10W 680	1	
R4396,97	ERJ6GEYJ331	M.RESISTOR CH1/10W 330	2	
R4400	ERJ6GEYJ470	M.RESISTOR CH1/10W 47	1	
R4401	VRE0034E122	M.RESISTOR CH 1/10W 1.2K	1	
R4402	VRE0034E302	M.RESISTOR CH 1/10W 3K	1	
R4403	VRE0034E181	M.RESISTOR CH 1/10W 180	1	
R4404	VRE0034E622	M.RESISTOR CH 1/10W 6.2K	1	
R4405	VRE0034E151	M.RESISTOR CH 1/10W 150	1	
R4406	VRE0034E823	M.RESISTOR CH 1/10W 82K	1	
R4407	VRE0034E122	M.RESISTOR CH 1/10W 1.2K	1	
R4408-11	ERJ6GEYJ103	M.RESISTOR CH1/10W 10K	4	
R4412	VRE0034E222	M.RESISTOR CH 1/10W 2.2K	1	
R4413	ERJ6GEYF472	M.RESISTOR CH1/10W 4.7K	1	
R4414	ERJ6GEY0R00	M.RESISTOR CH 1/10W 0	1	
R4415	ERJ6GEYJ103	M.RESISTOR CH1/10W 10K	1	
R4416	ERJ6GEY0R00	M.RESISTOR CH 1/10W 0	1	
R4417	ERJ6GEYJ102	M.RESISTOR CH1/10W 1K	1	
R4418	ERJ6GEYJ105	M.RESISTOR CH1/10W 1M	1	
R4419	ERJ6GEYF472	M.RESISTOR CH1/10W 4.7K	1	
R4420	ERJ6GEYJ122	M.RESISTOR CH1/10W 1.2K	1	
R4423	ERJ6GEYJ100	M.RESISTOR CH1/10W 10	1	
R4424,25	ERJ6GEYJ562	M.RESISTOR CH1/10W 5.6K	2	
R4426,27	ERDS2TJ100	C.RESISTOR 1/4W 10	2	
R4429	ERJ6GEYJ103	M.RESISTOR CH1/10W 10K	1	
R4442	ERJ6GEYJ103	M.RESISTOR CH1/10W 10K	1	
R4443	ERJ6GEYJ473	M.RESISTOR CH1/10W 47K	1	
R4444	ERJ6GEYJ681	M.RESISTOR CH1/10W 680	1	
R4445,46	ERJ6GEYJ331	M.RESISTOR CH1/10W 330	2	
R4448	ERJ6GEYJ470	M.RESISTOR CH1/10W 47	1	
R4452,53	ERJ6GEYJ103	M.RESISTOR CH1/10W 10K	2	
RY4201-05	VSY2039	RELAY	5	

Ref.No.	Part No.	Part Name & Description	Pcs	Remarks
SW4001	VSS0162	SWITCH	1	
SW4002	VSS0337	SWITCH	1	
SW4003	VSS0162	SWITCH	1	
SW4004	VSS0337	SWITCH	1	
SW4005	VSS0162	SWITCH	1	
SW4006	VSS0337	SWITCH	1	
SW4007	VSS0162	SWITCH	1	
SW4008	VSS0337	SWITCH	1	
SW4009	VSS0162	SWITCH	1	
SW4010	VSS0337	SWITCH	1	
SW4011	VSS0228	SWITCH	1	
SW4201-05	VSS0338	SWITCH	5	
T4001-05	VTD0065	TRANSFORMER	5	
T4201-05	VTD0042	TRANSFORMER	5	
		MISCELLANEOUS		
	VMZ1789	BARRIER	1	
	VMZ1790	BARRIER	5	
	XYN2+J7FN	SCREW	30	
	VEP80592A	P.C.BOARD W/COMPONENT		
		MECHA I/F		
D9001-05	10E1	DIODE	5	
P551	VJP3098A034	CONNECTOR (MALE)	1	
P552	VJP2856B040	CONNECTOR (MALE)	1	
P553	VJP3098A032	CONNECTOR (MALE)	1	
P554	VJP1932T	CONNECTOR (MALE)	1	
P556	VJP1231T	CONNECTOR (MALE)	1	
P558	VJP1231R	CONNECTOR (MALE)	1	
P559	VJP1231T	CONNECTOR (MALE)	1	
P561	VJP1229T	CONNECTOR (MALE)	1	
P562	VJP1230G	CONNECTOR (MALE)	1	
P563	VJP1239T	CONNECTOR (MALE)	1	
P564	VJP1235T	CONNECTOR (MALE)	1	
P565	VJP1234T	CONNECTOR (MALE)	1	
P568,69	VJP1230T	CONNECTOR (MALE)	2	
P570	VJP1230G	CONNECTOR (MALE)	1	
P571	VJP1230R	CONNECTOR (MALE)	1	
P572	VJP1232T	CONNECTOR (MALE)	1	
P574	VJP1231G	CONNECTOR (MALE)	1	
P575	VJP1231T	CONNECTOR (MALE)	1	
P576	VJP1231R	CONNECTOR (MALE)	1	
P577	VJP1231T	CONNECTOR (MALE)	1	
P578	VJP1230R	CONNECTOR (MALE)	1	
P579	VJP1230T	CONNECTOR (MALE)	1	
P580	VJP1230G	CONNECTOR (MALE)	1	
P581,82	VJP1230T	CONNECTOR (MALE)	2	
P583	VJP1230G	CONNECTOR (MALE)	1	
P584	VJP1230T	CONNECTOR (MALE)	1	
P585	VJP1230R	CONNECTOR (MALE)	1	
P587-89	VJP1511T	CONNECTOR (MALE)	3	
P61021	VJP1511T	CONNECTOR (MALE)	1	
P61022	VJP1231T	CONNECTOR (MALE)	1	

FR H.P AMP VEP84108A
BUFFER AMP VEP85028A

Ref.No.	Part No.	Part Name & Description	Pcs	Remarks
		RESISTORS		
R9001,02	ERDS2TJ121	C.RESISTOR 1/4W 120	2	
R9003-18	ERDS2TJ181	C.RESISTOR 1/4W 180	16	
	VEP84108A	P.C.BOARD W/COMPONENT		
		FR H.P AMP		
		CAPACITORS		
C4001-04	ECA1CXLV101	E.CAPACITOR 16V 100U	4	
C4005,06	ECA1HXLV100	E.CAPACITOR 50V 10U	2	
C4007,08	ECUM1H220JCN	C.CAPACITOR CH 50V 22P	2	
C4009,10	ECA1CXLV221	E.CAPACITOR 16V 220U	2	
C4011	ECA1HXLV010	E.CAPACITOR 50V 1U	1	
C4012	ECQB1H103JZ	P.CAPACITOR 50V 0.01U	1	
D4001	EBR5504S	DIODE	1	
D4002	MA151K	DIODE	1	
IC4001	M5206P	IC	1	
IC4002	AN6558	IC	1	
J302	VJP3008	CONNECTOR (MALE)	1	
P351	VJP3080	CONNECTOR (MALE)	1	
P352	VJP1230T	CONNECTOR (MALE)	1	
P353	VJP1234T	CONNECTOR (MALE)	1	
P354	VJP3080	CONNECTOR (MALE)	1	
P355	VJP1235T	CONNECTOR (MALE)	1	
Q4001	2SD602	TRANSISTOR	1	
Q4002	2SB710	TRANSISTOR	1	
Q4003	UN2213	TRANSISTOR	1	
Q4004	2SD601-R	TRANSISTOR	1	
		RESISTORS		
R4001	ERG1SJ102	M.RESISTOR 1W 1K	1	
R4002,03	ERJ6GEYJ331	M.RESISTOR CH1/10W 330	2	
R4004,05	ERJ6GEYF472	M.RESISTOR CH1/10W 4.7K	2	
R4006,07	ERJ6GEYJ473	M.RESISTOR CH1/10W 47K	2	
R4008,09	ERJ6GEYJ390	M.RESISTOR CH1/10W 39	2	
R4010,11	ERJ6GEYJ103	M.RESISTOR CH1/10W 10K	2	
R4012	ERJ6GEYJ101	M.RESISTOR CH1/10W 100	1	
RY4001	VSY2039	RELAY	1	
SW4001	ESB62801	SWITCH	1	

Ref.No.	Part No.	Part Name & Description	Pcs	Remarks
	VEP85028A	P.C.BOARD W/COMPONENT		
		BUFFER AMP		
		CAPACITORS		
C5001-04	ECUM1C104KBN	C.CAPACITOR CH 16V 0.1U	4	
C5005	ECUM1H220JCN	C.CAPACITOR CH 50V 22P	1	
C5006-08	ECUM1C104KBN	C.CAPACITOR CH 16V 0.1U	3	
C5009,10	ECA1HXLV100	E.CAPACITOR 50V 10U	2	
C5011-14	ECUM1C104KBN	C.CAPACITOR CH 16V 0.1U	4	
C5015	ECUM1H220JCN	C.CAPACITOR CH 50V 22P	1	
C5016-18	ECUM1C104KBN	C.CAPACITOR CH 16V 0.1U	3	
C5019,20	ECA1HXLV100	E.CAPACITOR 50V 10U	2	
C5021-24	ECUM1C104KBN	C.CAPACITOR CH 16V 0.1U	4	
C5025	ECUM1H220JCN	C.CAPACITOR CH 50V 22P	1	
C5026-28	ECUM1C104KBN	C.CAPACITOR CH 16V 0.1U	3	
C5029,30	ECA1HXLV100	E.CAPACITOR 50V 10U	2	
C5031-34	ECUM1C104KBN	C.CAPACITOR CH 16V 0.1U	4	
C5035	ECUM1H220JCN	C.CAPACITOR CH 50V 22P	1	
C5036-38	ECUM1C104KBN	C.CAPACITOR CH 16V 0.1U	3	
C5039-42	ECA1HXLV100	E.CAPACITOR 50V 10U	4	
L5001-08	VLQEL05S100K	COIL 10UH	8	
P531	VJP1233G	CONNECTOR (MALE)	1	
P532	VJP1233R	CONNECTOR (MALE)	1	
P533	VJP1233T	CONNECTOR (MALE)	1	
P534	VJP1233R	CONNECTOR (MALE)	1	
P536	VJP1230G	CONNECTOR (MALE)	1	
P537	VJP1230T	CONNECTOR (MALE)	1	
P538	VJP1230R	CONNECTOR (MALE)	1	
Q5001	XN6435	TRANSISTOR	1	
Q5002	XN6537	TRANSISTOR	1	
Q5003,04	XN5531	TRANSISTOR	2	
Q5005	XN6435	TRANSISTOR	1	
Q5006	XN6537	TRANSISTOR	1	
Q5007,08	XN5531	TRANSISTOR	2	
Q5009	XN6435	TRANSISTOR	1	
Q5010	XN6537	TRANSISTOR	1	
Q5011,12	XN5531	TRANSISTOR	2	
Q5013	XN6435	TRANSISTOR	1	
Q5014	XN6537	TRANSISTOR	1	
Q5015,16	XN5531	TRANSISTOR	2	
		RESISTORS		
R5001,02	ERJ6GEYG510	M.RESISTOR CH 1/10W 51	2	
R5003,04	ERJ6GEYG222	M.RESISTOR CH1/10W 2.2K	2	
R5005,06	ERJ6GEYG470	M.RESISTOR CH1/10W 47	2	
R5007,08	ERJ6GEYG331	M.RESISTOR CH1/10W 330	2	
R5009	ERJ6GEYG561	M.RESISTOR CH1/10W 560	1	
R5010,11	ERJ6GEYG470	M.RESISTOR CH1/10W 47	2	
R5012,13	ERJ6GEYG471	M.RESISTOR CH1/10W 470	2	
R5014	ERJ6GEYG121	M.RESISTOR CH1/10W 120	1	
R5015,16	ERJ6GEYG271	M.RESISTOR CH1/10W 270	2	
R5017	ERJ6GEYG331	M.RESISTOR CH1/10W 330	1	
R5018,19	ERJ6GEYG470	M.RESISTOR CH1/10W 47	2	
R5020,21	ERJ6GEYG221	M.RESISTOR CH1/10W 220	2	

AT POWER VEP82062B

Ref.No.	Part No.	Part Name & Description	Pcs	Remarks
R5022	ERJ6GEYG102	M.RESISTOR CH1/10W 1K	1	
R5023	ERJ6GEYG332	M.RESISTOR CH1/10W 3.3K	1	
R5024,25	ERJ6GEYG470	M.RESISTOR CH1/10W 47	2	
R5026,27	ERJ6GEYG510	M.RESISTOR CH 1/10W 51	2	
R5028,29	ERJ6GEYG222	M.RESISTOR CH1/10W 2.2K	2	
R5030,31	ERJ6GEYG470	M.RESISTOR CH1/10W 47	2	
R5032,33	ERJ6GEYG331	M.RESISTOR CH1/10W 330	2	
R5034	ERJ6GEYG561	M.RESISTOR CH1/10W 560	1	
R5035,36	ERJ6GEYG470	M.RESISTOR CH1/10W 47	2	
R5037,38	ERJ6GEYG471	M.RESISTOR CH1/10W 470	2	
R5039	ERJ6GEYG121	M.RESISTOR CH1/10W 120	1	
R5040,41	ERJ6GEYG271	M.RESISTOR CH1/10W 270	2	
R5042	ERJ6GEYG331	M.RESISTOR CH1/10W 330	1	
R5043,44	ERJ6GEYG470	M.RESISTOR CH1/10W 47	2	
R5045,46	ERJ6GEYG221	M.RESISTOR CH1/10W 220	2	
R5047	ERJ6GEYG102	M.RESISTOR CH1/10W 1K	1	
R5048	ERJ6GEYG332	M.RESISTOR CH1/10W 3.3K	1	
R5049,50	ERJ6GEYG470	M.RESISTOR CH1/10W 47	2	
R5051,52	ERJ6GEYG510	M.RESISTOR CH 1/10W 51	2	
R5053,54	ERJ6GEYG222	M.RESISTOR CH1/10W 2.2K	2	
R5055,56	ERJ6GEYG470	M.RESISTOR CH1/10W 47	2	
R5057,58	ERJ6GEYG331	M.RESISTOR CH1/10W 330	2	
R5059	ERJ6GEYG561	M.RESISTOR CH1/10W 560	1	
R5060,61	ERJ6GEYG470	M.RESISTOR CH1/10W 47	2	
R5062,63	ERJ6GEYG471	M.RESISTOR CH1/10W 470	2	
R5064	ERJ6GEYG121	M.RESISTOR CH1/10W 120	1	
R5065,66	ERJ6GEYG271	M.RESISTOR CH1/10W 270	2	
R5067	ERJ6GEYG331	M.RESISTOR CH1/10W 330	1	
R5068,69	ERJ6GEYG470	M.RESISTOR CH1/10W 47	2	
R5070,71	ERJ6GEYG221	M.RESISTOR CH1/10W 220	2	
R5072	ERJ6GEYG102	M.RESISTOR CH1/10W 1K	1	
R5073	ERJ6GEYG332	M.RESISTOR CH1/10W 3.3K	1	
R5074,75	ERJ6GEYG470	M.RESISTOR CH1/10W 47	2	
R5076,77	ERJ6GEYG510	M.RESISTOR CH 1/10W 51	2	
R5078,79	ERJ6GEYG222	M.RESISTOR CH1/10W 2.2K	2	
R5080,81	ERJ6GEYG470	M.RESISTOR CH1/10W 47	2	
R5082,83	ERJ6GEYG331	M.RESISTOR CH1/10W 330	2	
R5084	ERJ6GEYG561	M.RESISTOR CH1/10W 560	1	
R5085,86	ERJ6GEYG470	M.RESISTOR CH1/10W 47	2	
R5087,88	ERJ6GEYG471	M.RESISTOR CH1/10W 470	2	
R5089	ERJ6GEYG121	M.RESISTOR CH1/10W 120	1	
R5090,91	ERJ6GEYG271	M.RESISTOR CH1/10W 270	2	
R5092	ERJ6GEYG331	M.RESISTOR CH1/10W 330	1	
R5093,94	ERJ6GEYG470	M.RESISTOR CH1/10W 47	2	
R5095,96	ERJ6GEYG221	M.RESISTOR CH1/10W 220	2	
R5097	ERJ6GEYG102	M.RESISTOR CH1/10W 1K	1	
R5098	ERJ6GEYG332	M.RESISTOR CH1/10W 3.3K	1	
R5099,00	ERJ6GEYG470	M.RESISTOR CH1/10W 47	2	
		MISCELLANEOUS		
	VMP3271	P.C.BOARD HOLDER ANGLE	1	
	VSC3319	SHIELD CASE	1	
	XTV3+6F	SCREW	3	
	VSC3318	SHIELD CASE	1	
	VEP82062B	P.C.BOARD W/COMPONENT		
		AT POWER		
		CAPACITORS		
C1	ECEA1VU330	E.CAPACITOR 35V 33U	1	
C2	ECEA1EU221	E.CAPACITOR 25V 220U	1	
C3	ECEA1VU330	E.CAPACITOR 35V 33U	1	
C4	ECUM1H103ZFN	C.CAPACITOR CH 50V 0.01U	1	

Ref.No.	Part No.	Part Name & Description	Pcs	Remarks
C5	ECUM1H103KBN	C.CAPACITOR CH 50V 0.01U	1	
C6	ECUM1H102KBN	C.CAPACITOR CH 50V 1000P	1	
C7	ECUM1H103KBN	C.CAPACITOR CH 50V 0.01U	1	
C8,C9	ECWH10H103JR	P.CAPACITOR V 0.01U	2	
C10,11	ECWH10H103JR	P.CAPACITOR V 0.01U	2	
C20,21	ECCD2H331J	C.CAPACITOR 500V 330U	2	
C22	ECEA1VU330	E.CAPACITOR 35V 33U	1	
C24	ECEA1VU330	E.CAPACITOR 35V 33U	1	
C26,27	ECEA1VU330	E.CAPACITOR 35V 33U	2	
C28	ECEA1EU331	E.CAPACITOR 25V 330U	1	
C29	ECEA1CU100	E.CAPACITOR 16V 10U	1	
C34,35	ECCD2H331K	C.CAPACITOR 500V 330U	2	
CN350	VJP3079	CONNECTOR (MALE)	1	
D1,D2	10E1	DIODE	2	
D3	MA151K	DIODE	1	
D4,D5	RP1H	DIODE	2	
D6	ERZC07DK361B	DIODE	1	
D6	10E1	DIODE	1	
D7	ERZC07DK361B	DIODE	1	
D7-D9	10E1	DIODE	3	
D10	10E1	DIODE	1	
IC1	UPC494G	IC	1	
IC4,C5	VCR0111	IC	2	
L1	VLQ0128	COIL	1	
L3	VLQEL05S101K	COIL 100UH	1	
L5	VLQEL05S101K	COIL 100UH	1	
P1	VJP1143	CONNECTOR (MALE)	1	
Q1	UN2213	TRANSISTOR	1	
Q2	UN2113	TRANSISTOR	1	
Q3	2SB709	TRANSISTOR	1	
Q4,Q5	2SK742	TRANSISTOR	2	
		RESISTORS		
R1	ER050CHD1004	M.RESISTOR 1/4W 1000K	1	
R2	ERJ6GEYG223	M.RESISTOR CH1/10W 22K	1	
R3	ERJ6GEYJ103	M.RESISTOR CH1/10W 10K	1	
R4	ERJ6GEYJ104	M.RESISTOR CH1/10W 100K	1	
R5	ERJ6GEYJ103	M.RESISTOR CH1/10W 10K	1	
R6	ERJ6GEYG682	M.RESISTOR CH1/10W 6.8K	1	
R7	ERJ6GEYG332	M.RESISTOR CH1/10W 3.3K	1	
R8	ERJ6GEYG223	M.RESISTOR CH1/10W 22K	1	
R9	ERJ6GEYJ222	M.RESISTOR CH1/10W 2.2K	1	
R10	ERJ6GEYG124	M.RESISTOR CH1/10W 120K	1	
R11	ERJ6GEYG202	M.RESISTOR CH1/10W 2K	1	
R12,13	ERJ6GEYJ101	M.RESISTOR CH1/10W 100	2	
R14,15	ERQ12AJ2R2P	F.RESISTOR 1/2W 2.2	2	
R16	ERJ6GEYG622	M.RESISTOR CH1/10W 6.2K	1	
R17	ERJ6GEYG682	M.RESISTOR CH1/10W 6.8K	1	
R18-21	ER025CHD5103	M.RESISTOR 1/4W 510K	4	
R22	ERDS2TJ472	C.RESISTOR 1/4W 4.7K	1	
R23,24	ERDS2TJ474	C.RESISTOR 1/4W 470K	2	
R39	ERJ6GEYG153	M.RESISTOR CH1/10W 15K	1	
R40	ERJ6GEYG153	M.RESISTOR CH1/10W 15K	1	
R41	ER025CKF8253	M.RESISTOR 1/4W 825K	1	
R42	ER025CKF6813	M.RESISTOR 1/4W 681K	1	

TENSION SENSOR AMP VEP80306B
AC HEAD CONNECT VEP84136A
REEL I/F VEP80644A
REEL I/F VEP80645A
SENSOR VEP80641A

Ref.No.	Part No.	Part Name & Description	Pcs	Remarks
R43	ERJ6GEYJ473	M.RESISTOR CH1/10W 47K	1	
R44	ERDS2TJ103	C.RESISTOR 1/4W 10K	1	
R45	ERJ6GEYG153	M.RESISTOR CH1/10W 15K	1	
R46	ERJ6GEYG153	M.RESISTOR CH1/10W 15K	1	
R47	ER025CKF8253	M.RESISTOR 1/4W 825K	1	
R48	ER025CKF6813	M.RESISTOR 1/4W 681K	1	
R49	ERJ6GEYJ473	M.RESISTOR CH1/10W 47K	1	
R50	ERDS2TJ103	C.RESISTOR 1/4W 10K	1	
R51	ERDS2TJ682	C.RESISTOR 1/4W 6.8K	1	
T1	VLT0537	TRANSFORMER	1	
TP1-P8	VJR0646	TEST POINT	8	
TPG1	VJR0646	TEST POINT	1	
VR1	VRV0109B504	V.RESISTOR 500K	1	
VR2,R3	VRV0109B503	V.RESISTOR 50K	2	
		MISCELLANEOUS		
	VMP4241	P.C.BOARD HOLDER ANGLE	1	
	VSC2298	SHIELD CASE	1	
	VSC2299	SHIELD COVER	1	
	XTV3+6F	SCREW	2	
	VEP80306B	P.C.BOARD W/COMPONENT		
		TENSION SENSOR AMP		
		CAPACITORS		
C61202	ECUM1H103ZFN	C.CAPACITOR CH 50V 0.01U	1	
IC61201	NJM2904M	IC	1	
P61201	VJP1244G	CONNECTOR (MALE)	1	
		RESISTORS		
R61205,06	ER010CHF3301	M.RESISTOR 1/8W 3.3K	2	
R61207	ERJ6GEYJ223	M.RESISTOR CH1/10W 22K	1	
R61208	ERJ6GEYJ563	M.RESISTOR CH1/10W 56K	1	
TP61202	VJR0460	TEST POINT	1	
VR61202	VRV0110B202	V.RESISTOR 2K	1	

Ref.No.	Part No.	Part Name & Description	Pcs	Remarks
	VEP84136A	P.C.BOARD W/COMPONENT		
		AC HEAD CONNECT		
		CAPACITORS		
C4001	ECQB1H823JF	P.CAPACITOR 50V 0.082U	1	
D4001	10E1	DIODE	1	
P4001	VJP1230G	CONNECTOR (MALE)	1	
P4002	VJP1230T	CONNECTOR (MALE)	1	
P4003	VJP3080	CONNECTOR (MALE)	1	
P4004	VJP1233T	CONNECTOR (MALE)	1	
P4005	VJP1230G	CONNECTOR (MALE)	1	
P4006	VJP3083	CONNECTOR (MALE)	1	
P4007	VJP1233T	CONNECTOR (MALE)	1	
	VEP80644A	P.C.BOARD W/COMPONENT		
		REEL I/F		
		MISCELLANEOUS		
	VJP1230T	CONNECTOR (MALE)	1	
	VJP1231T	CONNECTOR (MALE)	1	
	VJP1238T	CONNECTOR (MALE)	1	
	VJP3112	CONNECTOR (MALE)	1	
	VJS2949B013	CONNECTOR (FEMALE)	1	
	VEP80645A	P.C.BOARD W/COMPONENT		
		REEL I/F		
		MISCELLANEOUS		
	VJP1230T	CONNECTOR (MALE)	1	
	VJP1231T	CONNECTOR (MALE)	1	
	VJP1238T	CONNECTOR (MALE)	1	
	VJP3112	CONNECTOR (MALE)	1	
	VJS2949B013	CONNECTOR (FEMALE)	1	
	VEP80641A	P.C.BOARD W/COMPONENT		
		SENSOR		

LED SENSOR VEP80652A
PHOTO SENSOR VEP80640A
LED SENSOR VEP00P03D
DETECT BIT (L) VEP80655A
DETECT BIT (R) VEP80642A
POSITION PHOTO TR VEP80661A
POSITION LED VEP80661B
SUB LOADING PHOTO VEP80458B
SUB LOADING PHOTO VEP00E25E

Ref.No.	Part No.	Part Name & Description	Pcs	Remarks
		MISCELLANEOUS		
	SE310	LED	1	
	VEP80652A	P.C.BOARD W/COMPONENT		
		LED SENSOR		
		MISCELLANEOUS		
	PH110	PHOTO TRANSISTOR	1	
	VEP80640A	P.C.BOARD W/COMPONENT		
		PHOTO SENSOR		
		MISCELLANEOUS		
	ON1382	PHOTO COUPLER	3	
	VEP00P03D	P.C.BOARD W/COMPONENT		
		LED SENSOR		
		MISCELLANEOUS		
	VMX1663	DIODE BASE	1	
	LN59L.KT	DIODE	1	
	VEP80655A	P.C.BOARD W/COMPONENT		
		DETECT BIT (L)		
		MISCELLANEOUS		
	PH110	PHOTO TRANSISTOR	3	

Ref.No.	Part No.	Part Name & Description	Pcs	Remarks
	VEP80642A	P.C.BOARD W/COMPONENT		
		DETECT BIT (R)		
		MISCELLANEOUS		
	SE310	LED	3	
	VEP80661A	P.C.BOARD W/COMPONENT		
		POSITION PHOTO TR		
		MISCELLANEOUS		
	PH110	PHOTO TRANSISTOR	1	
	VEP80661B	P.C.BOARD W/COMPONENT		
		POSITION LED		
		MISCELLANEOUS		
	SE310	LED	1	
	VEP80458B	P.C.BOARD W/COMPONENT		
		SUBLOADING PHOTO		
		MISCELLANEOUS		
	ON1110	PHOTO INTERRUPTER	1	
	VEP00E25E	P.C.BOARD W/COMPONENT		
		SUBLOADING PHOTO		
		MISCELLANEOUS		

LOADING PHOTO VEP00E04D
UNLOADING VEP00E25D

Ref.No.	Part No.	Part Name & Description	Pcs	Remarks
	ON1110	PHOT INTERRUPTER	1	
	VEP00E04D	P.C.BOARD W/COMPONENT		
		LOADING PHOTO		
		MISCELLANEOUS		
	ON1110	PHOTO INTERRUPTER	1	
	VEP00E25D	P.C.BOARD W/COMPONENT		
		UNLOADING		
		MISCELLANEOUS		
	ON1110	PHOTO INTERRUPTER	1	

PHOTO SENSOR VEP80639A
TR SENSOR VEP00E28D

Ref.No.	Part No.	Part Name & Description	Pcs	Remarks
	VEP80639A	P.C.BOARD W/COMPONENT		
		PHOTO SENSOR		
		MISCELLANEOUS		
	ON1114	PHOTO INTERRUPTER		
	VEP00E28D	P.C.BOARD W/COMPONENT		
		TR SENSOR		
		MISCELLANEOUS		
	ON1114	PHOTO INTERRUPTER	1	

Exploded Views & Parts List

PAL

Panasonic
Broadcast Systems

CONTENTS

PAL

ELECTRICAL REPLACEMENT PARTS LIST

L MOTHER P.C.BOARD (VEP80586B) 5-22
L1 A.A/D D/A, V.D/A P.C.BOARD (VEP84105B) 5-22
L2 VIDEO/AUDIO REC P.C.BOARD (VEP88072D) 5-29
L2 SUB P.C.BOARD (VEP88081A) 5-29
L3 VIDEO/AUDIO PB P.C.BOARD (VEP88070D) 5-32
L4 VIDEO PROCESS P.C.BOARD (VEP88071F) 5-34
L4 SUB P.C.BOARD (VEP88090A) 5-34
S MOTHER P.C.BOARD (VEP80593A) 5-39
S1 EQUALIZER CH0 P.C.BOARD (VEP85021C) 5-40
S1 SUB P.C.BOARD (VEP87002A) 5-40
S2 EQUALIZER CH1 P.C.BOARD (VEP85021D) 5-44
S2 SUB P.C.BOARD (VEP87002A) 5-44
S3 CUE AUDIO P.C.BOARD (VEP84107A) 5-48
S4 AT P.C.BOARD (VEP82065D) 5-52
S4 SUB P.C.BOARD (VEP82078A) 5-52
S5 SERVO P.C.BOARD (VEP82067E) 5-55
S5 SUB P.C.BOARD (VEP82085B) 5-55
S6 TIME CODE P.C.BOARD (VEP86091G) 5-58
S6 SUB P.C.BOARD (VEP86133B) 5-58
S7 SYSTEM CONTROL P.C.BOARD (VEP86092F) 5-60
S8 AUDIO PROCESS P.C.BOARD (VEP84111B) 5-61
S8 SUB 1 P.C.BOARD (VEP84158D) 5-61
S8 SUB 2 P.C.BOARD (VEP84137A) 5-61
S8 SUB 3 P.C.BOARD (VEP84142A) 5-61
S9 VIDEO A/D PLL P.C.BOARD (VEP88073B) 5-63
S9 SUB P.C.BOARD (VEP88100B) 5-63
M1 DRIVE P.C.BOARD (VEP82068A) 5-66
M1 SUB 1 P.C.BOARD (VEP82086A) 5-66
M1 SUB 2 P.C.BOARD (VEP82103A) 5-66
REC AMP P.C.BOARD (VEP85023C) 5-68
REC AMP SUB 1 P.C.BOARD (VEP85046A) 5-68
REC AMP SUB 2 P.C.BOARD (VEP85047B) 5-68
HEAD AMP POWER (R) P.C.BOARD (VEP85026A) 5-71
H.A REGULATOR (S) P.C.BOARD (VEP85027A) 5-71
POWER SUPPLY 1 P.C.BOARD (VEP81045A) 5-72
POWER SUB 1 P.C.BOARD (VEP81048A) 5-72
POWER SUPPLY 2 P.C.BOARD (VEP81047A) 5-73
POWER SUB 2 P.C.BOARD (VEP81046A) 5-73
POWER SUB 3 P.C.BOARD (VEP81055B) 5-75

EJECT P.C.BOARD (VEP80591A) 5-75
POWER LED P.C.BOARD (VEP80628A) 5-75
AUTO OFF P.C.BOARD (VEP80627A) 5-75
RF MODE P.C.BOARD (VEP86097A) 5-76
FR SW P.C.BOARD (VEP86093A) 5-76
FR FUNCTION P.C.BOARD (VEP86094A) 5-76
FR BASE 1 P.C.BOARD (VEP86095A) 5-77
FR BASE 2 P.C.BOARD (VEP86096C) 5-78
HEAD PHONE JACK 1 P.C.BOARD (VEP80588A) 5-78
REMOTE JACK 1 P.C.BOARD (VEP80590A) 5-79
REMOTE JACK 2 P.C.BOARD (VEP80609A) 5-79
REMOTE JACK 3 P.C.BOARD (VEP80589A) 5-79
VIDEO IN/OUT P.C.BOARD (VEP88075B) 5-79
AUDIO IN/OUT MONITOR P.C.BOARD (VEP84122A) 5-80
DIGITAL AUDIO IN P.C.BOARD (VEP84125A) 5-81
DIGITAL AUDIO OUT P.C.BOARD (VEP84126A) 5-81
AUDIO IN/OUT 1 P.C.BOARD (VEP84110B) 5-81
MECHA I/F P.C.BOARD (VEP80592A) 5-83
FR H.P AMP P.C.BOARD (VEP84108A) 5-84
BUFFER AMP P.C.BOARD (VEP85028A) 5-84
AT POWER P.C.BOARD (VEP82062B) 5-85
TENSION SENSOR AMP P.C.BOARD (VEP80306B) 5-86
AC HEAD CONNECT P.C.BOARD (VEP84136A) 5-86
REEL I/F P.C.BOARD (VEP80644A) 5-86
REEL I/F P.C.BOARD (VEP80645A) 5-86
SENSOR P.C.BOARD (VEP80641A) 5-87
LED SENSOR P.C.BOARD (VEP80652A) 5-87
PHOTO SENSOR P.C.BOARD (VEP80640A) 5-87
LED SENSOR P.C.BOARD (VEP00P03D) 5-87
DETECT BIT (L) P.C.BOARD (VEP80655A) 5-87
DETECT BIT (R) P.C.BOARD (VEP80642A) 5-87
POSITION PHOTO TR P.C.BOARD (VEP80661A) 5-87
POSITION LED P.C.BOARD (VEP80661B) 5-87
SUB LOADING PHOTO P.C.BOARD (VEP80458B) 5-87
SUB LOADING PHOTO P.C.BOARD (VEP00E25E) 5-88
LOADING PHOTO P.C.BOARD (VEP00E04D) 5-88
UNLOADING P.C.BOARD (VEP00E25D) 5-88
PHOTO SENSOR P.C.BOARD (VEP80639A) 5-88
TR SENSOR P.C.BOARD (VEP00E28D) 5-88

ELECTRICAL REPLACEMENT PARTS LIST

Ref.No.	Part No.	Part Name & Description	Pcs	Remarks
	VEP80586B	P.C.BOARD W/COMPONENT	1	
		L MOTHER		
	VEP84105B	P.C.BOARD W/COMPONENT	1	
		L1 A.A/D D/A, V.D/A		
	VEP88072D	P.C.BOARD W/COMPONENT	1	
		L2 VIDEO/AUDIO REC		
	VEP88081A	P.C.BOARD W/COMPONENT	1	FOR VEP88072D
		L2 SUB		
	VEP88070D	P.C.BOARD W/COMPONENT	1	
		L3 VIDEO/AUDIO PB		
	VEP88071F	P.C.BOARD W/COMPONENT	1	
		L4 VIDEO PROCESS		
	VEP88090A	P.C.BOARD W/COMPONENT	1	FOR VEP88071F
		L4 SUB		
	VEP80593A	P.C.BOARD W/COMPONENT	1	
		S MOTHER		
	VEP85021C	P.C.BOARD W/COMPONENT	1	
		S1 EQUALIZER CH0		
	VEP87002A	P.C.BOARD W/COMPONENT	1	FOR VEP85021C
		S1 SUB		
	VEP85021D	P.C.BOARD W/COMPONENT	1	
		S2 EQUALIZER CH1		
	VEP87002A	P.C.BOARD W/COMPONENT	1	FOR VEP85021D
		S2 SUB		
	VEP84107A	P.C.BOARD W/COMPONENT	1	
		S3 CUE AUDIO		
	VEP82065D	P.C.BOARD W/COMPONENT	1	
		S4 AT		
	VEP82078A	P.C.BOARD W/COMPONENT	1	FOR VEP82065D
		S4 SUB		
	VEP82067E	P.C.BOARD W/COMPONENT	1	
		S5 SERVO		
	VEP82085B	P.C.BOARD W/COMPONENT	1	FOR VEP82067E
		S5 SUB		
	VEP86091G	P.C.BOARD W/COMPONENT	1	
		S6 TIME CODE		
	VEP86133B	P.C.BOARD W/COMPONENT	1	FOR VEP86091G
		S6 SUB		
	VEP86092F	P.C.BOARD W/COMPONENT	1	
		S7 SYSTEM CONTROL		
	VEP84111B	P.C.BOARD W/COMPONENT	1	
		S8 AUDIO PROCESS		
	VEP84158D	P.C.BOARD W/COMPONENT	1	FOR VEP84111B
		S8 SUB 1		
	VEP84137A	P.C.BOARD W/COMPONENT	1	FOR VEP84111B
		S8 SUB 2		
	VEP84142A	P.C.BOARD W/COMPONENT	1	FOR VEP84111B
		S8 SUB 3		
	VEP88073B	P.C.BOARD W/COMPONENT	1	
		S9 VIDEO A/D PLL		
	VEP88100B	P.C.BOARD W/COMPONENT	1	FOR VEP88073B
		S9 SUB		
	VEP82068A	P.C.BOARD W/COMPONENT	1	
		M1 DRIVE		
	VEP82086A	P.C.BOARD W/COMPONENT	1	FOR VEP82068A
		M1 SUB 1		
	VEP82103A	P.C.BOARD W/COMPONENT	1	FOR VEP82068A
		M1 SUB 2		

Ref.No.	Part No.	Part Name & Description	Pcs	Remarks
	VEP85023C	P.C.BOARD W/COMPONENT	1	
		REC AMP		
	VEP85046A	P.C.BOARD W/COMPONENT	1	FOR VEP85023C
		REC AMP SUB 1		
	VEP85047B	P.C.BOARD W/COMPONENT	1	FOR VEP85023C
		REC AMP SUB 2		
	VEP85026A	P.C.BOARD W/COMPONENT	1	
		HEAD AMP POWER (R)		
	VEP85027A	P.C.BOARD W/COMPONENT	1	
		H.A REGULATOR (S)		
	VEP81045A	P.C.BOARD W/COMPONENT	1	
		POWER SUPPLY 1		
	VEP81048A	P.C.BOARD W/COMPONENT	1	FOR VEP81045A
		POWER SUB 1		
	VEP81047A	P.C.BOARD W/COMPONENT	1	
		POWER SUPPLY 2		
	VEP81046A	P.C.BOARD W/COMPONENT	1	FOR VEP81047A
		POWER SUB 2		
	VEP81055B	P.C.BOARD W/COMPONENT	1	
		POWER SUB 3		
	VEP80591A	P.C.BOARD W/COMPONENT	1	
		EJECT		
	VEP80628A	P.C.BOARD W/COMPONENT	1	
		POWER LED		
	VEP80627A	P.C.BOARD W/COMPONENT	1	
		AUTO OFF		
	VEP86097A	P.C.BOARD W/COMPONENT	1	
		RF MODE		
	VEP86093A	P.C.BOARD W/COMPONENT	1	
		FR SW		
	VEP86094A	P.C.BOARD W/COMPONENT	1	
		FR RUNCTION		
	VEP86095A	P.C.BOARD W/COMPONENT	1	
		FR BASE 1		
	VEP86096C	P.C.BOARD W/COMPONENT	1	
		FR BASE 2		
	VEP80588A	P.C.BOARD W/COMPONENT	1	
		HEAD PHONE JACK 1		
	VEP80590A	P.C.BOARD W/COMPONENT	1	
		REMOTE JACK 1		
	VEP80609A	P.C.BOARD W/COMPONENT	1	
		REMOTE JACK 2		
	VEP80589A	P.C.BOARD W/COMPONENT	1	
		REMOTE JACK 3		
	VEP88075B	P.C.BOARD W/COMPONENT	1	
		VIDEO IN/OUT		
	VEP84122A	P.C.BOARD W/COMPONENT	1	
		AUDIO IN/OUT MONITOR		
	VEP84125A	P.C.BOARD W/COMPONENT	1	
		DIGITAL AUDIO IN		
	VEP84126A	P.C.BOARD W/COMPONENT	1	
		DIGITAL AUDIO OUT		
	VEP84110B	P.C.BOARD W/COMPONENT	1	

L MOTHER VEP80586B
L1 A.A/D D/A, V.D/A VEP84105B

Ref.No.	Part No.	Part Name & Description	Pcs	Remarks
		AUDIO IN/OUT 1		
	VEP80592A	P.C.BOARD W/COMPONENT	1	
		MECHA I/F		
	VEP84108A	P.C.BOARD W/COMPONENT	1	
		FR H.P AMP		
	VEP85028A	P.C.BOARD W/COMPONENT	1	
		BUFFER AMP		
	VEP82062B	P.C.BOARD W/COMPONENT	1	
		AT POWER		
	VEP80306B	P.C.BOARD W/COMPONENT	1	
		TENSION SENSOR AMP		
	VEP84136A	P.C.BOARD W/COMPONENT	1	
		AC HEAD CONNECT		
	VEP80644A	P.C.BOARD W/COMPONENT	1	
		REEL I/F		
	VEP80645A	P.C.BOARD W/COMPONENT	1	
		REEL I/F		
	VEP80641A	P.C.BOARD W/COMPONENT	1	
		SENSOR		
	VEP80652A	P.C.BOARD W/COMPONENT	1	
		LED SENSOR		
	VEP80640A	P.C.BOARD W/COMPONENT	1	
		PHOTO SENSOR		
	VEP00P03D	P.C.BOARD W/COMPONENT	1	
		LED SENSOR		
	VEP80655A	P.C.BOARD W/COMPONENT	1	
		DETECT BIT (L)		
	VEP80642A	P.C.BOARD W/COMPONENT	1	
		DETECT BIT (R)		
	VEP80661A	P.C.BOARD W/COMPONENT	1	
		POSITION PHOTO TR		
	VEP80661B	P.C.BOARD W/COMPONENT	1	
		POSITION LED		
	VEP80458B	P.C.BOARD W/COMPONENT	1	
		SUBLOADING PHOTO		
	VEP00E25E	P.C.BOARD W/COMPONENT	1	
		SUB LOADING PHOTO		
	VEP00E04D	P.C.BOARD W/COMPONENT	1	
		LOADING PHOTO		
	VEP00E25D	P.C.BOARD W/COMPONENT	1	
		UNLOADING		
	VEP80639A	P.C.BOARD W/COMPONENT	1	
		PHOTO SENSOR		
	VEP00E28D	P.C.BOARD W/COMPONENT	1	
		TR SENSOR		
	VFK0702	P.C.BOARD W/COMPONENT	1	
		L EXTENSION		
	VFK0703	P.C.BOARD W/COMPONENT	1	
		S EXTENSION		

Ref.No.	Part No.	Part Name & Description	Pcs	Remarks
	VEP80586B	P.C.BOARD W/COMPONENT		
		L MOTHER		
P001-08	VJS2899A096	CONNECTOR (FEMALE)	8	
P009	VJP1145T	CONNECTOR (MALE)	1	
P010	VJP3080	CONNECTOR (MALE)	1	
P012	VJP1235T	CONNECTOR (MALE)	1	
P014	VJP2739A008	CONNECTOR (MALE)	1	
P015	VJP3080	CONNECTOR (MALE)	1	
P017	VJP3083	CONNECTOR (MALE)	1	
P018	VJP3081	CONNECTOR (MALE)	1	
P019	VJP3098A060	CONNECTOR (MALE)	1	
P021	VJP3080	CONNECTOR (MALE)	1	
P022	VJP1233T	CONNECTOR (MALE)	1	
P024	VJP3098A060	CONNECTOR (MALE)	1	
P026	VJP1231T	CONNECTOR (MALE)	1	
P027	VJP3078	CONNECTOR (MALE)	1	
P028	VJP3080	CONNECTOR (MALE)	1	
P029	VJP1235T	CONNECTOR (MALE)	1	
P032	VJP1233T	CONNECTOR (MALE)	1	
P034	VJP2824A010	CONNECTOR (MALE)	1	
P035	VJP2824A003	CONNECTOR (MALE)	1	
P036	VJP1232T	CONNECTOR (MALE)	1	
		MISCELLANEOUS		
	VMP3029	P.C.BOARD HOLDER ANGLE	1	
	VMP3030	P.C.BOARD HOLDER ANGLE	1	
	XNG26BFZ	NUT	16	
	XSN26+8FZ	SCREW	16	
	XTV3+6F	SCREW	6	
	XWA26BFZ	WASHER	16	
	VEP84105B	P.C.BOARD W/COMPONENT		
		L1 A.A/D D/A, V.D/A		
		CAPACITORS		
C4001,02	ECUM1E104ZFN	E.CAPACITOR 25V 0.1U	2	
C4003	ECA1CXLV101	E.CAPACITOR 16V 100U	1	
C4004,05	ECUM1E104ZFN	E.CAPACITOR 25V 0.1U	2	
C4006	ECA1CXLV101	E.CAPACITOR 16V 100U	1	
C4007-09	ECUM1E104ZFN	E.CAPACITOR 25V 0.1U	3	
C4010	VCK0037474KR	C.CAPACITOR	1	
C4011	ECUM1E104ZFN	E.CAPACITOR 25V 0.1U	1	
C4012	ECA1CXLV101	E.CAPACITOR 16V 100U	1	
C4013	ECA1CXLV470	E.CAPACITOR 16V 47U	1	
C4014	ECUM1E104ZFN	E.CAPACITOR 25V 0.1U	1	
C4015	ECA1CXLV470	E.CAPACITOR 16V 47U	1	
C4016	ECUM1E104ZFN	E.CAPACITOR 25V 0.1U	1	
C4017	ECA0JXNV101	E.CAPACITOR 6.3V 100U	1	
C4018	ECUM1H391JN	C.CAPACITOR CH 50V 390P	1	
C4019	ECUM1H560JCN	C.CAPACITOR CH 50V 56P	1	
C4020	ECUM1H020DCN	C.CAPACITOR CH 50V 2P	1	
C4021,22	ECUM1E104ZFN	E.CAPACITOR 25V 0.1U	2	
C4023	ECA1CXLV470	E.CAPACITOR 16V 47U	1	
C4024,25	ECUM1E104ZFN	E.CAPACITOR 25V 0.1U	2	
C4026	ECA1CXLV470	E.CAPACITOR 16V 47U	1	
C4027-29	ECUM1E104ZFN	E.CAPACITOR 25V 0.1U	3	
C4030	ECA1HXNV2R2	E.CAPACITOR 50V 2.2U	1	
C4031	VCK0037474KR	C.CAPACITOR	1	

Ref.No.	Part No.	Part Name & Description	Pcs	Remarks
C4032	ECA1VXNV4R7	E.CAPACITOR 35V 4.7U	1	
C4033-35	ECUM1E104ZFN	E.CAPACITOR 25V 0.1U	3	
C4036	ECUM1H331JCN	C.CAPACITOR CH 50V 330P	1	
C4037	ECUM1H470JCN	C.CAPACITOR CH 50V 47P	1	
C4038,39	ECUM1E104ZFN	E.CAPACITOR 25V 0.1U	2	
C4040	ECUM1H391JN	C.CAPACITOR CH 50V 390P	1	
C4041	ECUM1H020DCN	C.CAPACITOR CH 50V 2P	1	
C4042-45	ECUM1E104ZFN	E.CAPACITOR 25V 0.1U	4	
C4046	ECA1CXLV101	E.CAPACITOR 16V 100U	1	
C4047,48	ECUM1H470JCN	C.CAPACITOR CH 50V 47P	2	
C4049	ECA1CXLV470	E.CAPACITOR 16V 47U	1	
C4050	ECUM1E104ZFN	E.CAPACITOR 25V 0.1U	1	
C4051	ECA1CXLV470	E.CAPACITOR 16V 47U	1	
C4052	ECUM1E104ZFN	E.CAPACITOR 25V 0.1U	1	
C4053,54	ECA1CXLV470	E.CAPACITOR 16V 47U	2	
C4061-63	ECUM1E104ZFN	E.CAPACITOR 25V 0.1U	3	
C4064	ECA1CXLV470	E.CAPACITOR 16V 47U	1	
C4065	ECUM1E104ZFN	E.CAPACITOR 25V 0.1U	1	
C4066	ECA1CXLV470	E.CAPACITOR 16V 47U	1	
C4067	ECUM1E104ZFN	E.CAPACITOR 25V 0.1U	1	
C4068	ECA1CXLV470	E.CAPACITOR 16V 47U	1	
C4069	ECUM1E104ZFN	E.CAPACITOR 25V 0.1U	1	
C4070	ECA1CXLV470	E.CAPACITOR 16V 47U	1	
C4071-74	ECUM1E104ZFN	E.CAPACITOR 25V 0.1U	4	
C4075	ECA1CXLV470	E.CAPACITOR 16V 47U	1	
C4076	ECUM1E104ZFN	E.CAPACITOR 25V 0.1U	1	
C4077	ECA1CXLV470	E.CAPACITOR 16V 47U	1	
C4078,79	ECUM1E104ZFN	E.CAPACITOR 25V 0.1U	2	
C4080	ECUM1H270JCN	C.CAPACITOR CH 50V 27P	1	
C4081	ECUM1H151JCN	C.CAPACITOR CH 50V 150P	1	
C4082,83	ECUM1E104ZFN	E.CAPACITOR 25V 0.1U	2	
C4084	ECUM1H102JN	C.CAPACITOR CH 50V 1000P	1	
C4085,86	ECUM1E104ZFN	E.CAPACITOR 25V 0.1U	2	
C4087	ECA1CXLV470	E.CAPACITOR 16V 47U	1	
C4088	ECUM1E104ZFN	E.CAPACITOR 25V 0.1U	1	
C4089	ECA1CXLV470	E.CAPACITOR 16V 47U	1	
C4090,91	ECUM1E104ZFN	E.CAPACITOR 25V 0.1U	2	
C4092	ECA1CXLV101	E.CAPACITOR 16V 100U	1	
C4093,94	ECUM1E104ZFN	E.CAPACITOR 25V 0.1U	2	
C4095	ECA1CXLV101	E.CAPACITOR 16V 100U	1	
C4096-98	ECUM1E104ZFN	E.CAPACITOR 25V 0.1U	3	
C4099-03	ECUM1H180JCN	C.CAPACITOR CH 50V 18P	5	
C4104	ECUM1H020DCN	C.CAPACITOR CH 50V 2P	1	
C4201	ECUM1H101JCN	C.CAPACITOR CH 50V 100P	1	
C4202-07	ECUM1H103ZFN	C.CAPACITOR CH 50V 0.01U	6	
C4208	ECA1CXNV100	E.CAPACITOR 16V 10U	1	
C4209,10	ECUM1H103ZFN	C.CAPACITOR CH 50V 0.01U	2	
C4211,12	ECUM1E104ZFN	E.CAPACITOR 25V 0.1U	2	
C4213	ECUM1H102JN	C.CAPACITOR CH 50V 1000P	1	
C4214	ECUM1H470JCN	C.CAPACITOR CH 50V 47P	1	
C4215	ECUM1H102JN	C.CAPACITOR CH 50V 1000P	1	
C4216-19	ECUM1H103ZFN	C.CAPACITOR CH 50V 0.01U	4	
C4220-23	ECEA1CPZ101	E.CAPACITOR 16V 100U	4	
C4224,25	ECEA1EPZ101	E.CAPACITOR 25V 100U	2	
C4226,27	ECEA0JPZ221	E.CAPACITOR 6.3V 220U	2	
C4228	ECUM1H101JCN	C.CAPACITOR CH 50V 100P	1	
C4231,32	ECUM1H103ZFN	C.CAPACITOR CH 50V 0.01U	2	
C4301,02	ECEA1CBZ330	E.CAPACITOR 16V 33U	2	
C4303-06	ECUM1H103ZFN	C.CAPACITOR CH 50V 0.01U	4	
C4307	ECEA1CPZ100	E.CAPACITOR 16V 10U	1	
C4308	ECUM1H330JCN	C.CAPACITOR CH 50V 33P	1	
C4309,10	ECUM1H103ZFN	C.CAPACITOR CH 50V 0.01U	2	
C4311	ECEA1APZ221	E.CAPACITOR 10V 220U	1	
C4312,13	ECUM1E104ZFN	E.CAPACITOR 25V 0.1U	2	
C4314	ECEA1APZ101	E.CAPACITOR 10V 100U	1	
C4315	ECEA1CPZ221	E.CAPACITOR 16V 220U	1	
C4316,17	ECUM1E104ZFN	E.CAPACITOR 25V 0.1U	2	
C4318	ECEA1CPZ101	E.CAPACITOR 16V 100U	1	
C4319	ECUM1E104ZFN	E.CAPACITOR 25V 0.1U	1	
C4320	ECHS1H472GZ	P.CAPACITOR 50V 4700P	1	
C4321	ECUM1H100DCN	C.CAPACITOR CH 50V 10P	1	
C4322,23	ECEA1CBZ330	E.CAPACITOR 16V 33U	2	
C4324-27	ECUM1H103ZFN	C.CAPACITOR CH 50V 0.01U	4	
C4328,29	ECUM1H471JN	C.CAPACITOR CH 50V 470P	2	
C4330,31	ECUM1H121JCN	C.CAPACITOR CH 50V 120P	2	
C4332,33	ECUM1H182JN	C.CAPACITOR CH 50V 1800P	2	
C4334,35	ECEA1CBZ330	E.CAPACITOR 16V 33U	2	
C4336-39	ECUM1H103ZFN	C.CAPACITOR CH 50V 0.01U	4	
C4340,41	ECUM1H103KBN	C.CAPACITOR CH 50V 0.01U	2	
C4342,43	ECUM1E104ZFN	E.CAPACITOR 25V 0.1U	2	
C4344	ECUM1H103KBN	C.CAPACITOR CH 50V 0.01U	1	
C4345	ECEA1CPZ100	E.CAPACITOR 16V 10U	1	
C4346	ECUM1E104ZFN	E.CAPACITOR 25V 0.1U	1	
C4347	ECUM1H103KBN	C.CAPACITOR CH 50V 0.01U	1	
C4348-50	ECUM1E104ZFN	E.CAPACITOR 25V 0.1U	3	
C4351,52	ECEA1CBZ330	E.CAPACITOR 16V 33U	2	
C4353-56	ECUM1H103ZFN	C.CAPACITOR CH 50V 0.01U	4	
C4357	ECEA1CPZ100	E.CAPACITOR 16V 10U	1	
C4358	ECUM1H330JCN	C.CAPACITOR CH 50V 33P	1	
C4359,60	ECUM1H103ZFN	C.CAPACITOR CH 50V 0.01U	2	
C4361	ECEA1CPZ221	E.CAPACITOR 16V 220U	1	
C4362,63	ECUM1E104ZFN	E.CAPACITOR 25V 0.1U	2	
C4364	ECEA1CPZ101	E.CAPACITOR 16V 100U	1	
C4365	ECUM1E104ZFN	E.CAPACITOR 25V 0.1U	1	
C4366	ECEA1APZ221	E.CAPACITOR 10V 220U	1	
C4367,68	ECUM1E104ZFN	E.CAPACITOR 25V 0.1U	2	
C4369	ECEA1APZ101	E.CAPACITOR 10V 100U	1	
C4370	ECHS1H472GZ	P.CAPACITOR 50V 4700P	1	
C4371	ECUM1H100DCN	C.CAPACITOR CH 50V 10P	1	
C4372,73	ECEA1CBZ330	E.CAPACITOR 16V 33U	2	
C4374-77	ECUM1H103ZFN	C.CAPACITOR CH 50V 0.01U	4	
C4378,79	ECUM1H471JN	C.CAPACITOR CH 50V 470P	2	
C4380,81	ECUM1H121JCN	C.CAPACITOR CH 50V 120P	2	
C4382,83	ECUM1H182JN	C.CAPACITOR CH 50V 1800P	2	
C4384,85	ECEA1CBZ330	E.CAPACITOR 16V 33U	2	
C4386-89	ECUM1H103ZFN	C.CAPACITOR CH 50V 0.01U	4	
C4390,91	ECUM1H103KBN	C.CAPACITOR CH 50V 0.01U	2	
C4392,93	ECUM1E104ZFN	E.CAPACITOR 25V 0.1U	2	
C4394	ECUM1H103KBN	C.CAPACITOR CH 50V 0.01U	1	
C4395	ECEA1CPZ100	E.CAPACITOR 16V 10U	1	
C4396	ECUM1E104ZFN	E.CAPACITOR 25V 0.1U	1	
C4397	ECUM1H103KBN	C.CAPACITOR CH 50V 0.01U	1	
C4398-02	ECUM1E104ZFN	E.CAPACITOR 25V 0.1U	5	
C4403,04	ECUM1H103ZFN	C.CAPACITOR CH 50V 0.01U	2	
C4405,06	ECEA1APZ101	E.CAPACITOR 10V 100U	2	
C4407,08	ECUM1H103ZFN	C.CAPACITOR CH 50V 0.01U	2	
C4409,10	ECEA1APZ101	E.CAPACITOR 10V 100U	2	
C4411,12	ECUM1H103ZFN	C.CAPACITOR CH 50V 0.01U	2	
C4413	ECUM1E104ZFN	E.CAPACITOR 25V 0.1U	1	
C4414	ECEA1APZ221	E.CAPACITOR 10V 220U	1	
C4416-19	ECEA1CPZ100	E.CAPACITOR 16V 10U	4	
C4421,22	ECEA1CBZ330	E.CAPACITOR 16V 33U	2	
C4423-26	ECUM1H103ZFN	C.CAPACITOR CH 50V 0.01U	4	
C4427	ECEA1CPZ100	E.CAPACITOR 16V 10U	1	
C4428	ECUM1H330JCN	C.CAPACITOR CH 50V 33P	1	
C4429,30	ECUM1H103ZFN	C.CAPACITOR CH 50V 0.01U	2	
C4431	ECEA1APZ221	E.CAPACITOR 10V 220U	1	
C4432,33	ECUM1E104ZFN	E.CAPACITOR 25V 0.1U	2	
C4434	ECEA1APZ101	E.CAPACITOR 10V 100U	1	
C4435	ECEA1CPZ221	E.CAPACITOR 16V 220U	1	
C4436,37	ECUM1E104ZFN	E.CAPACITOR 25V 0.1U	2	
C4438	ECEA1CPZ101	E.CAPACITOR 16V 100U	1	
C4439	ECUM1E104ZFN	E.CAPACITOR 25V 0.1U	1	
C4440	ECHS1H472GZ	P.CAPACITOR 50V 4700P	1	
C4441	ECUM1H100DCN	C.CAPACITOR CH 50V 10P	1	
C4442,43	ECEA1CBZ330	E.CAPACITOR 16V 33U	2	
C4444-47	ECUM1H103ZFN	C.CAPACITOR CH 50V 0.01U	4	
C4448,49	ECUM1H471JN	C.CAPACITOR CH 50V 470P	2	
C4450,51	ECUM1H121JCN	C.CAPACITOR CH 50V 120P	2	
C4452,53	ECUM1H182JN	C.CAPACITOR CH 50V 1800P	2	
C4454,55	ECEA1CBZ330	E.CAPACITOR 16V 33U	2	
C4456-59	ECUM1H103ZFN	C.CAPACITOR CH 50V 0.01U	4	
C4460,61	ECUM1H103KBN	C.CAPACITOR CH 50V 0.01U	2	
C4462,63	ECUM1E104ZFN	E.CAPACITOR 25V 0.1U	2	
C4464	ECUM1H103KBN	C.CAPACITOR CH 50V 0.01U	1	
C4465	ECEA1CPZ100	E.CAPACITOR 16V 10U	1	
C4466	ECUM1E104ZFN	E.CAPACITOR 25V 0.1U	1	
C4467	ECUM1H103KBN	C.CAPACITOR CH 50V 0.01U	1	
C4468-70	ECUM1E104ZFN	E.CAPACITOR 25V 0.1U	3	
C4471,72	ECEA1CBZ330	E.CAPACITOR 16V 33U	2	

Ref.No.	Part No.	Part Name & Description	Pcs	Remarks
C4473-76	ECUM1H103ZFN	C.CAPACITOR CH 50V 0.01U	4	
C4477	ECEA1CPZ100	E.CAPACITOR 16V 10U	1	
C4478	ECUM1H330JCN	C.CAPACITOR CH 50V 33P	1	
C4479,80	ECUM1H103ZFN	C.CAPACITOR CH 50V 0.01U	2	
C4481	ECEA1CPZ221	E.CAPACITOR 16V 220U	1	
C4482,83	ECUM1E104ZFN	E.CAPACITOR 25V 0.1U	2	
C4484	ECEA1CPZ101	E.CAPACITOR 16V 100U	1	
C4485	ECUM1E104ZFN	E.CAPACITOR 25V 0.1U	1	
C4486	ECEA1APZ221	E.CAPACITOR 10V 220U	1	
C4487,88	ECUM1E104ZFN	E.CAPACITOR 25V 0.1U	2	
C4489	ECEA1APZ101	E.CAPACITOR 10V 100U	1	
C4490	ECHS1H472GZ	P.CAPACITOR 50V 4700P	1	
C4491	ECUM1H100DCN	C.CAPACITOR CH 50V 10P	1	
C4492,93	ECEA1CBZ330	E.CAPACITOR 16V 33U	2	
C4494-97	ECUM1H103ZFN	C.CAPACITOR CH 50V 0.01U	4	
C4498,99	ECUM1H471JN	C.CAPACITOR CH 50V 470P	2	
C4500,01	ECUM1H121JCN	C.CAPACITOR CH 50V 120P	2	
C4502,03	ECUM1H182JN	C.CAPACITOR CH 50V 1800P	2	
C4504,05	ECEA1CBZ330	E.CAPACITOR 16V 33U	2	
C4506-09	ECUM1H103ZFN	C.CAPACITOR CH 50V 0.01U	4	
C4510,11	ECUM1H103KBN	C.CAPACITOR CH 50V 0.01U	2	
C4512,13	ECUM1E104ZFN	E.CAPACITOR 25V 0.1U	2	
C4514	ECUM1H103KBN	C.CAPACITOR CH 50V 0.01U	1	
C4515	ECEA1CPZ100	E.CAPACITOR 16V 10U	1	
C4516	ECUM1E104ZFN	E.CAPACITOR 25V 0.1U	1	
C4517	ECUM1H103KBN	C.CAPACITOR CH 50V 0.01U	1	
C4518-22	ECUM1E104ZFN	E.CAPACITOR 25V 0.1U	5	
C4523,24	ECUM1H103ZFN	C.CAPACITOR CH 50V 0.01U	2	
C4525,26	ECEA1APZ101	E.CAPACITOR 10V 100U	2	
C4527,28	ECUM1H103ZFN	C.CAPACITOR CH 50V 0.01U	2	
C4529,30	ECEA1APZ101	E.CAPACITOR 10V 100U	2	
C4531,32	ECUM1H103ZFN	C.CAPACITOR CH 50V 0.01U	2	
C4533	ECUM1E104ZFN	E.CAPACITOR 25V 0.1U	1	
C4534	ECEA1APZ221	E.CAPACITOR 10V 220U	1	
C4536-39	ECEA1CPZ100	E.CAPACITOR 16V 10U	4	
C4551,52	ECUM1E104ZFN	E.CAPACITOR 25V 0.1U	2	
C4601	ECUM1E104ZFN	E.CAPACITOR 25V 0.1U	1	
C4602	ECEA1APZ101	E.CAPACITOR 10V 100U	1	
C4603	ECUM1E104ZFN	E.CAPACITOR 25V 0.1U	1	
C4604,05	ECEA1APZ101	E.CAPACITOR 10V 100U	2	
C4606,07	ECUM1E104ZFN	E.CAPACITOR 25V 0.1U	2	
C4608	ECEA0JPZ221	E.CAPACITOR 6.3V 220U	1	
C4609-15	ECUM1E104ZFN	E.CAPACITOR 25V 0.1U	7	
C4616	ECUM1H101JCN	C.CAPACITOR CH 50V 100P	1	
C4617	ECUM1E104ZFN	E.CAPACITOR 25V 0.1U	1	
C4618	ECUM1H101JCN	C.CAPACITOR CH 50V 100P	1	
C4619-21	ECUM1E104ZFN	E.CAPACITOR 25V 0.1U	3	
C4622	ECEA0JPZ221	E.CAPACITOR 6.3V 220U	1	
C4623-26	ECUM1H151JCN	C.CAPACITOR CH 50V 150P	4	
C4627,28	ECUM1H470JCN	C.CAPACITOR CH 50V 47P	2	
C4629,30	ECUM1H330JCN	C.CAPACITOR CH 50V 33P	2	
C4631,32	ECUM1H470JCN	C.CAPACITOR CH 50V 47P	2	
C4633	ECUM1H103ZFN	C.CAPACITOR CH 50V 0.01U	1	
C4634	ECEA1CPZ100	E.CAPACITOR 16V 10U	1	
C4635	ECUM1H103ZFN	C.CAPACITOR CH 50V 0.01U	1	
C4636	ECEA1CPZ100	E.CAPACITOR 16V 10U	1	
C4637,38	ECUM1H471JN	C.CAPACITOR CH 50V 470P	2	
C4639,40	ECUM1H103ZFN	C.CAPACITOR CH 50V 0.01U	2	
C4641	ECUM1H222KBN	C.CAPACITOR CH 50V 2200P	1	
C4642,43	ECUM1H330JCN	C.CAPACITOR CH 50V 33P	2	
C4644	ECUM1H222KBN	C.CAPACITOR CH 50V 2200P	1	
C4645,46	ECUM1H103ZFN	C.CAPACITOR CH 50V 0.01U	2	
C4647	ECUM1H120JCN	C.CAPACITOR CH 50V 12P	1	
C4648,49	ECUM1H103ZFN	C.CAPACITOR CH 50V 0.01U	2	
C4650,51	ECUM1H680JCN	C.CAPACITOR CH 50V 68P	2	
C4652,53	ECUM1H103ZFN	C.CAPACITOR CH 50V 0.01U	2	
C4654	ECHS1H472GZ	P.CAPACITOR 50V 4700P	1	
C4655	ECEA1CBZ330	E.CAPACITOR 16V 33U	1	
C4656	ECEA1CPZ101	E.CAPACITOR 16V 100U	1	
C4657	ECUM1E104ZFN	E.CAPACITOR 25V 0.1U	1	
C4658	ECEA1CPZ101	E.CAPACITOR 16V 100U	1	
C4659	ECUM1E104ZFN	E.CAPACITOR 25V 0.1U	1	
C4660	ECUM1H103ZFN	C.CAPACITOR CH 50V 0.01U	1	
C4661,62	ECEA1CPZ101	E.CAPACITOR 16V 100U	2	
C4663	ECUM1E104ZFN	E.CAPACITOR 25V 0.1U	1	

Ref.No.	Part No.	Part Name & Description	Pcs	Remarks
C4664	ECEA1CPZ101	E.CAPACITOR 16V 100U	1	
C4665	ECUM1E104ZFN	E.CAPACITOR 25V 0.1U	1	
C4666	ECUM1H103ZFN	C.CAPACITOR CH 50V 0.01U	1	
C4667	ECEA1CPZ101	E.CAPACITOR 16V 100U	1	
C4668	ECUM1E104ZFN	E.CAPACITOR 25V 0.1U	1	
C4669	ECEA1APZ101	E.CAPACITOR 10V 100U	1	
C4670	ECUM1E104ZFN	E.CAPACITOR 25V 0.1U	1	
C4671,72	ECEA1APZ101	E.CAPACITOR 10V 100U	2	
C4673-76	ECUM1E104ZFN	E.CAPACITOR 25V 0.1U	4	
C4677	ECUM1H101JCN	C.CAPACITOR CH 50V 100P	1	
C4678-80	ECUM1E104ZFN	E.CAPACITOR 25V 0.1U	3	
C4681	ECEA0JPZ221	E.CAPACITOR 6.3V 220U	1	
C4682-85	ECUM1H151JCN	C.CAPACITOR CH 50V 150P	4	
C4686,87	ECUM1H470JCN	C.CAPACITOR CH 50V 47P	2	
C4688,89	ECUM1H330JCN	C.CAPACITOR CH 50V 33P	2	
C4690,91	ECUM1H470JCN	C.CAPACITOR CH 50V 47P	2	
C4692	ECUM1H103ZFN	C.CAPACITOR CH 50V 0.01U	1	
C4693	ECEA1CPZ100	E.CAPACITOR 16V 10U	1	
C4694	ECUM1H103ZFN	C.CAPACITOR CH 50V 0.01U	1	
C4695	ECEA1CPZ100	E.CAPACITOR 16V 10U	1	
C4696,97	ECUM1H471JN	C.CAPACITOR CH 50V 470P	2	
C4698,99	ECUM1H103ZFN	C.CAPACITOR CH 50V 0.01U	2	
C4700	ECUM1H222KBN	C.CAPACITOR CH 50V 2200P	1	
C4701,02	ECUM1H330JCN	C.CAPACITOR CH 50V 33P	2	
C4703	ECUM1H222KBN	C.CAPACITOR CH 50V 2200P	1	
C4704,05	ECUM1H103ZFN	C.CAPACITOR CH 50V 0.01U	2	
C4706	ECUM1H120JCN	C.CAPACITOR CH 50V 12P	1	
C4707,08	ECUM1H103ZFN	C.CAPACITOR CH 50V 0.01U	2	
C4709,10	ECUM1H680JCN	C.CAPACITOR CH 50V 68P	2	
C4711,12	ECUM1H103ZFN	C.CAPACITOR CH 50V 0.01U	2	
C4713	ECHS1H472GZ	P.CAPACITOR 50V 4700P	1	
C4714	ECEA1CBZ330	E.CAPACITOR 16V 33U	1	
C4715	ECEA1CPZ101	E.CAPACITOR 16V 100U	1	
C4716	ECUM1E104ZFN	E.CAPACITOR 25V 0.1U	1	
C4717	ECEA1CPZ101	E.CAPACITOR 16V 100U	1	
C4718	ECUM1E104ZFN	E.CAPACITOR 25V 0.1U	1	
C4719	ECUM1H104KBM	C.CAPACITOR CH 50V 0.1U	1	
C4720	ECUM1E104ZFN	E.CAPACITOR 25V 0.1U	1	
C4731	ECUM1E104ZFN	E.CAPACITOR 25V 0.1U	1	
C4732	ECEA1APZ101	E.CAPACITOR 10V 100U	1	
C4733	ECUM1E104ZFN	E.CAPACITOR 25V 0.1U	1	
C4734,35	ECEA1APZ101	E.CAPACITOR 10V 100U	2	
C4736,37	ECUM1E104ZFN	E.CAPACITOR 25V 0.1U	2	
C4738	ECEA0JPZ221	E.CAPACITOR 6.3V 220U	1	
C4739-45	ECUM1E104ZFN	E.CAPACITOR 25V 0.1U	7	
C4746	ECUM1H101JCN	C.CAPACITOR CH 50V 100P	1	
C4747	ECUM1E104ZFN	E.CAPACITOR 25V 0.1U	1	
C4748	ECUM1H101JCN	C.CAPACITOR CH 50V 100P	1	
C4749-51	ECUM1E104ZFN	E.CAPACITOR 25V 0.1U	3	
C4752	ECEA0JPZ221	E.CAPACITOR 6.3V 220U	1	
C4753-56	ECUM1H151JCN	C.CAPACITOR CH 50V 150P	4	
C4757,58	ECUM1H470JCN	C.CAPACITOR CH 50V 47P	2	
C4759,60	ECUM1H330JCN	C.CAPACITOR CH 50V 33P	2	
C4761,62	ECUM1H470JCN	C.CAPACITOR CH 50V 47P	2	
C4763	ECUM1H103ZFN	C.CAPACITOR CH 50V 0.01U	1	
C4764	ECEA1CPZ100	E.CAPACITOR 16V 10U	1	
C4765	ECUM1H103ZFN	C.CAPACITOR CH 50V 0.01U	1	
C4766	ECEA1CPZ100	E.CAPACITOR 16V 10U	1	
C4767,68	ECUM1H471JN	C.CAPACITOR CH 50V 470P	2	
C4769,70	ECUM1H103ZFN	C.CAPACITOR CH 50V 0.01U	2	
C4771	ECUM1H222KBN	C.CAPACITOR CH 50V 2200P	1	
C4772,73	ECUM1H330JCN	C.CAPACITOR CH 50V 33P	2	
C4774	ECUM1H222KBN	C.CAPACITOR CH 50V 2200P	1	
C4775,76	ECUM1H103ZFN	C.CAPACITOR CH 50V 0.01U	2	
C4777	ECUM1H120JCN	C.CAPACITOR CH 50V 12P	1	
C4778,79	ECUM1H103ZFN	C.CAPACITOR CH 50V 0.01U	2	
C4780,81	ECUM1H680JCN	C.CAPACITOR CH 50V 68P	2	
C4782,83	ECUM1H103ZFN	C.CAPACITOR CH 50V 0.01U	2	
C4784	ECHS1H472GZ	P.CAPACITOR 50V 4700P	1	
C4785	ECEA1CBZ330	E.CAPACITOR 16V 33U	1	
C4786	ECEA1CPZ101	E.CAPACITOR 16V 100U	1	
C4787	ECUM1E104ZFN	E.CAPACITOR 25V 0.1U	1	
C4788	ECEA1CPZ101	E.CAPACITOR 16V 100U	1	
C4789	ECUM1E104ZFN	E.CAPACITOR 25V 0.1U	1	
C4790	ECUM1H103ZFN	C.CAPACITOR CH 50V 0.01U	1	

Ref.No.	Part No.	Part Name & Description	Pcs	Remarks
C4791,92	ECEA1CPZ101	E.CAPACITOR 16V 100U	2	
C4793	ECUM1E104ZFN	E.CAPACITOR 25V 0.1U	1	
C4794	ECEA1CPZ101	E.CAPACITOR 16V 100U	1	
C4795	ECUM1E104ZFN	E.CAPACITOR 25V 0.1U	1	
C4796	ECUM1H103ZFN	C.CAPACITOR CH 50V 0.01U	1	
C4797	ECEA1CPZ101	E.CAPACITOR 16V 100U	1	
C4798	ECUM1E104ZFN	E.CAPACITOR 25V 0.1U	1	
C4799	ECEA1APZ101	E.CAPACITOR 10V 100U	1	
C4800	ECUM1E104ZFN	E.CAPACITOR 25V 0.1U	1	
C4801,02	ECEA1APZ101	E.CAPACITOR 10V 100U	2	
C4803-06	ECUM1E104ZFN	E.CAPACITOR 25V 0.1U	4	
C4807	ECUM1H101JCN	C.CAPACITOR CH 50V 100P	1	
C4808-10	ECUM1E104ZFN	E.CAPACITOR 25V 0.1U	3	
C4811	ECEA0JPZ221	E.CAPACITOR 6.3V 220U	1	
C4812-15	ECUM1H151JCN	C.CAPACITOR CH 50V 150P	4	
C4816,17	ECUM1H470JCN	C.CAPACITOR CH 50V 47P	2	
C4818,19	ECUM1H330JCN	C.CAPACITOR CH 50V 33P	2	
C4820,21	ECUM1H470JCN	C.CAPACITOR CH 50V 47P	2	
C4822	ECUM1H103ZFN	C.CAPACITOR CH 50V 0.01U	1	
C4823	ECEA1CPZ100	E.CAPACITOR 16V 10U	1	
C4824	ECUM1H103ZFN	C.CAPACITOR CH 50V 0.01U	1	
C4825	ECEA1CPZ100	E.CAPACITOR 16V 10U	1	
C4826,27	ECUM1H471JN	C.CAPACITOR CH 50V 470P	2	
C4828,29	ECUM1H103ZFN	C.CAPACITOR CH 50V 0.01U	2	
C4830	ECUM1H222KBN	C.CAPACITOR CH 50V 2200P	1	
C4831,32	ECUM1H330JCN	C.CAPACITOR CH 50V 33P	2	
C4833	ECUM1H222KBN	C.CAPACITOR CH 50V 2200P	1	
C4834,35	ECUM1H103ZFN	C.CAPACITOR CH 50V 0.01U	2	
C4836	ECUM1H120JCN	C.CAPACITOR CH 50V 12P	1	
C4837,38	ECUM1H103ZFN	C.CAPACITOR CH 50V 0.01U	2	
C4839,40	ECUM1H680JCN	C.CAPACITOR CH 50V 68P	2	
C4841,42	ECUM1H103ZFN	C.CAPACITOR CH 50V 0.01U	2	
C4843	ECHS1H472GZ	P.CAPACITOR 50V 4700P	1	
C4844	ECEA1CBZ330	E.CAPACITOR 16V 33U	1	
C4845	ECEA1CPZ101	E.CAPACITOR 16V 100U	1	
C4846	ECUM1E104ZFN	E.CAPACITOR 25V 0.1U	1	
C4847	ECEA1CPZ101	E.CAPACITOR 16V 100U	1	
C4848	ECUM1E104ZFN	E.CAPACITOR 25V 0.1U	1	
C4850	ECUM1E104ZFN	E.CAPACITOR 25V 0.1U	1	
C4861	ECUM1E104ZFN	E.CAPACITOR 25V 0.1U	1	
C4862	ECEA1APZ101	E.CAPACITOR 10V 100U	1	
C4863	ECUM1E104ZFN	E.CAPACITOR 25V 0.1U	1	
C4864,65	ECEA1APZ101	E.CAPACITOR 10V 100U	2	
C4866,67	ECUM1E104ZFN	E.CAPACITOR 25V 0.1U	2	
C4868	ECEA0JPZ221	E.CAPACITOR 6.3V 220U	1	
C4869-75	ECUM1E104ZFN	E.CAPACITOR 25V 0.1U	7	
C4876	ECUM1H101JCN	C.CAPACITOR CH 50V 100P	1	
C4877	ECUM1E104ZFN	E.CAPACITOR 25V 0.1U	1	
C4878	ECUM1H101JCN	C.CAPACITOR CH 50V 100P	1	
C4879-81	ECUM1E104ZFN	E.CAPACITOR 25V 0.1U	3	
C4882	ECEA0JPZ221	E.CAPACITOR 6.3V 220U	1	
C4883-86	ECUM1H151JCN	C.CAPACITOR CH 50V 150P	4	
C4887,88	ECUM1H470JCN	C.CAPACITOR CH 50V 47P	2	
C4889,90	ECUM1H330JCN	C.CAPACITOR CH 50V 33P	2	
C4891,92	ECUM1H470JCN	C.CAPACITOR CH 50V 47P	2	
C4893	ECUM1H103ZFN	C.CAPACITOR CH 50V 0.01U	1	
C4894	ECEA1CPZ100	E.CAPACITOR 16V 10U	1	
C4895	ECUM1H103ZFN	C.CAPACITOR CH 50V 0.01U	1	
C4896	ECEA1CPZ100	E.CAPACITOR 16V 10U	1	
C4897,98	ECUM1H471JN	C.CAPACITOR CH 50V 470P	2	
C4899,00	ECUM1H103ZFN	C.CAPACITOR CH 50V 0.01U	2	
C4901	ECUM1H222KBN	C.CAPACITOR CH 50V 2200P	1	
C4902,03	ECUM1H330JCN	C.CAPACITOR CH 50V 33P	2	
C4904	ECUM1H222KBN	C.CAPACITOR CH 50V 2200P	1	
C4905,06	ECUM1H103ZFN	C.CAPACITOR CH 50V 0.01U	2	
C4907	ECUM1H120JCN	C.CAPACITOR CH 50V 12P	1	
C4908,09	ECUM1H103ZFN	C.CAPACITOR CH 50V 0.01U	2	
C4910,11	ECUM1H680JCN	C.CAPACITOR CH 50V 68P	2	
C4912,13	ECUM1H103ZFN	C.CAPACITOR CH 50V 0.01U	2	
C4914	ECHS1H472GZ	P.CAPACITOR 50V 4700P	1	
C4915	ECEA1CBZ330	E.CAPACITOR 16V 33U	1	
C4916	ECEA1CPZ101	E.CAPACITOR 16V 100U	1	
C4917	ECUM1E104ZFN	E.CAPACITOR 25V 0.1U	1	
C4918	ECEA1CPZ101	E.CAPACITOR 16V 100U	1	
C4919	ECUM1E104ZFN	E.CAPACITOR 25V 0.1U	1	

Ref.No.	Part No.	Part Name & Description	Pcs	Remarks
C4920	ECUM1H103ZFN	C.CAPACITOR CH 50V 0.01U	1	
C4921,22	ECEA1CPZ101	E.CAPACITOR 16V 100U	2	
C4923	ECUM1E104ZFN	E.CAPACITOR 25V 0.1U	1	
C4924	ECEA1CPZ101	E.CAPACITOR 16V 100U	1	
C4925	ECUM1E104ZFN	E.CAPACITOR 25V 0.1U	1	
C4926	ECUM1H103ZFN	C.CAPACITOR CH 50V 0.01U	1	
C4927	ECEA1CPZ101	E.CAPACITOR 16V 100U	1	
C4928	ECUM1E104ZFN	E.CAPACITOR 25V 0.1U	1	
C4929	ECEA1APZ101	E.CAPACITOR 10V 100U	1	
C4930	ECUM1E104ZFN	E.CAPACITOR 25V 0.1U	1	
C4931,32	ECEA1APZ101	E.CAPACITOR 10V 100U	2	
C4933-36	ECUM1E104ZFN	E.CAPACITOR 25V 0.1U	4	
C4937	ECUM1H101JCN	C.CAPACITOR CH 50V 100P	1	
C4938-40	ECUM1E104ZFN	E.CAPACITOR 25V 0.1U	3	
C4941	ECEA0JPZ221	E.CAPACITOR 6.3V 220U	1	
C4942-45	ECUM1H151JCN	C.CAPACITOR CH 50V 150P	4	
C4946,47	ECUM1H470JCN	C.CAPACITOR CH 50V 47P	2	
C4948,49	ECUM1H330JCN	C.CAPACITOR CH 50V 33P	2	
C4950,51	ECUM1H470JCN	C.CAPACITOR CH 50V 47P	2	
C4952	ECUM1H103ZFN	C.CAPACITOR CH 50V 0.01U	1	
C4953	ECEA1CPZ100	E.CAPACITOR 16V 10U	1	
C4954	ECUM1H103ZFN	C.CAPACITOR CH 50V 0.01U	1	
C4955	ECEA1CPZ100	E.CAPACITOR 16V 10U	1	
C4956,57	ECUM1H471JN	C.CAPACITOR CH 50V 470P	2	
C4958,59	ECUM1H103ZFN	C.CAPACITOR CH 50V 0.01U	2	
C4960	ECUM1H222KBN	C.CAPACITOR CH 50V 2200P	1	
C4961,62	ECUM1H330JCN	C.CAPACITOR CH 50V 33P	2	
C4963	ECUM1H222KBN	C.CAPACITOR CH 50V 2200P	1	
C4964,65	ECUM1H103ZFN	C.CAPACITOR CH 50V 0.01U	2	
C4966	ECUM1H120JCN	C.CAPACITOR CH 50V 12P	1	
C4967,68	ECUM1H103ZFN	C.CAPACITOR CH 50V 0.01U	2	
C4969,70	ECUM1H680JCN	C.CAPACITOR CH 50V 68P	2	
C4971,72	ECUM1H103ZFN	C.CAPACITOR CH 50V 0.01U	2	
C4973	ECHS1H472GZ	P.CAPACITOR 50V 4700P	1	
C4974	ECEA1CBZ330	E.CAPACITOR 16V 33U	1	
C4975	ECEA1CPZ101	E.CAPACITOR 16V 100U	1	
C4976	ECUM1E104ZFN	E.CAPACITOR 25V 0.1U	1	
C4977	ECEA1CPZ101	E.CAPACITOR 16V 100U	1	
C4978	ECUM1E104ZFN	E.CAPACITOR 25V 0.1U	1	
C4980	ECUM1E104ZFN	E.CAPACITOR 25V 0.1U	1	
C4991,92	ECCF1H150JC	C.CAPACITOR 50V 15P	2	
D4001	1SZ53	DIODE	1	
D4002	MA3160-M	DIODE	1	
D4003	MA157	DIODE	1	
D4011-14	MA3160-M	DIODE	4	
D4015	MA151K	DIODE	1	
D4301-04	MA151K	DIODE	4	
D4601-06	MA151K	DIODE	6	
FL4001	VLF0904	FILTER	1	
IC4001	74F821SC	IC	1	
IC4002	HA19505	IC	1	
IC4003	AN78N05	IC	1	
IC4004	MC10125L	IC	1	
IC4005	NE5539D	IC	1	
IC4006	AN78N09	IC	1	
IC4007	AN79N09	IC	1	
IC4008	MM74HC221AM	IC	1	
IC4009	NJM084M	IC	1	
IC4010	NE5539D	IC	1	
IC4011	AN79L05	IC	1	
IC4012,13	AD9300KQ	IC	2	
IC4014	NJM082BM	IC	1	
IC4015	MC74HC4052F	IC	1	
IC4016	AN78N05	IC	1	
IC4017	AN79L05	IC	1	
IC4201	MC74HC04AF	IC	1	

Ref.No.	Part No.	Part Name & Description	Pcs	Remarks
IC4202	MC74HC139AF	IC	1	
IC4203	UPD710556B	IC	1	
IC4204	MC74HC573AF	IC	1	
IC4205	MC74HC138AF	IC	1	
IC4206	UPD710556B	IC	1	
IC4207	TC74HC123AF	IC	1	
IC4208	MC74HC32AF	IC	1	
IC4211	MC10125L	IC	1	
IC4212	MC74HC86F	IC	1	
IC4213	SN74HCT541N	IC	1	
IC4214	SN74LS541NS	IC	1	
IC4215	MC74HC157AF	IC	1	
IC4216	MC74HC04AF	IC	1	
IC4217	SN74ALS157AL	IC	1	
IC4301	NJM5532MD	IC	1	
IC4302	AD7535JN	IC	1	
IC4303-07	NJM5532MD	IC	5	
IC4308	AK5326	IC	1	
IC4309	MN53040VPQ	IC	1	
IC4310	AN78N12	IC	1	
IC4311	AN78N05	IC	1	
IC4312	AN79N05	IC	1	
IC4313	NJM5532MD	IC	1	
IC4314	AD7535JN	IC	1	
IC4315-19	NJM5532MD	IC	5	
IC4320	AK5326	IC	1	
IC4321	MN53040VPQ	IC	1	
IC4322	AN79N12	IC	1	
IC4331	NJM5532MD	IC	1	
IC4332	AD7535JN	IC	1	
IC4333-37	NJM5532MD	IC	5	
IC4338	AK5326	IC	1	
IC4339	MN53040VPQ	IC	1	
IC4340	AN78N12	IC	1	
IC4341	AN78N05	IC	1	
IC4342	AN79N05	IC	1	
IC4343	NJM5532MD	IC	1	
IC4344	AD7535JN	IC	1	
IC4345-49	NJM5532MD	IC	5	
IC4350	AK5326	IC	1	
IC4351	MN53040VPQ	IC	1	
IC4352	AN79N12	IC	1	
IC4601	AN78N05	IC	1	
IC4602	MN64730	IC	1	
IC4603	MN64731	IC	1	
IC4604-08	NJM5532MD	IC	5	
IC4609	AN78N12	IC	1	
IC4610	AN79N12	IC	1	
IC4611	AN78N05	IC	1	
IC4612	MN64731	IC	1	
IC4613-17	NJM5532MD	IC	5	
IC4621	AN78N05	IC	1	
IC4622	MN64730	IC	1	
IC4623	MN64731	IC	1	
IC4624-28	NJM5532MD	IC	5	
IC4629	AN78N12	IC	1	
IC4630	AN79N12	IC	1	
IC4631	AN78N05	IC	1	
IC4632	MN64731	IC	1	
IC4633-37	NJM5532MD	IC	5	
IC4641	AN78N05	IC	1	
IC4642	MN64730	IC	1	
IC4643	MN64731	IC	1	
IC4644-48	NJM5532MD	IC	5	
IC4649	AN78N12	IC	1	
IC4650	AN79N12	IC	1	
IC4651	AN78N05	IC	1	
IC4652	MN64731	IC	1	
IC4653-57	NJM5532MD	IC	5	
L4001-03	VLQEL05S220K	COIL 22UH	3	
L4004	VLQEL05S821J	COIL 820UH	1	
L4005,06	VLQEL05S220K	COIL 22UH	2	

Ref.No.	Part No.	Part Name & Description	Pcs	Remarks
L4011-16	VLQEL05S220K	COIL 22UH	6	
L4017	VLQEL05S680J	COIL 67UH	1	
L4018,19	VLQEL05S220K	COIL 22UH	2	
L4201	EIV7EN142Q	COIL	1	
L4301-08	VLQEL05S220K	COIL 22UH	8	
L4311-18	VLQEL05S220K	COIL 22UH	8	
L4601-06	EIV7EN141Q	COIL	6	
P001,02	VJP3151	CONNECTOR (MALE)	2	
Q4001	2SB709-R	TRANSISTOR	1	
Q4002,03	2SD636	TRANSISTOR	2	
Q4004	2SD601-R	TRANSISTOR	1	
Q4005	2SB793-R	TRANSISTOR	1	
Q4006	2SK198-Q	TRANSISTOR	1	
Q4007,08	2SD601-R	TRANSISTOR	2	
Q4011	2SB709-R	TRANSISTOR	1	
Q4012,13	2SC2188	TRANSISTOR	2	
Q4014	2SB709-R	TRANSISTOR	1	
Q4015,16	2SC2188	TRANSISTOR	2	
Q4017	2SB709-R	TRANSISTOR	1	
Q4018,19	2SC2188	TRANSISTOR	2	
Q4021	2SB709-R	TRANSISTOR	1	
Q4022,23	2SC2188	TRANSISTOR	2	
Q4024	2SD601-R	TRANSISTOR	1	
Q4301	UN2213	TRANSISTOR	1	
Q4302	2SD601-R	TRANSISTOR	1	
Q4303	UN2213	TRANSISTOR	1	
Q4304	2SD601-R	TRANSISTOR	1	
Q4305	UN2213	TRANSISTOR	1	
Q4306	2SD601-R	TRANSISTOR	1	
Q4307	UN2213	TRANSISTOR	1	
Q4308	2SD601-R	TRANSISTOR	1	
Q4601	2SD601-R	TRANSISTOR	1	
Q4602	UN2213	TRANSISTOR	1	
Q4603	2SD601-R	TRANSISTOR	1	
Q4604	UN2213	TRANSISTOR	1	
Q4611	2SD601-R	TRANSISTOR	1	
Q4612	UN2213	TRANSISTOR	1	
Q4613	2SD601-R	TRANSISTOR	1	
Q4614	UN2213	TRANSISTOR	1	
Q4621	2SD601-R	TRANSISTOR	1	
Q4622	UN2213	TRANSISTOR	1	
Q4623	2SD601-R	TRANSISTOR	1	
Q4624	UN2213	TRANSISTOR	1	
		RESISTORS		
R4001-10	ERJ6GEYJ101	M.RESISTOR CH1/10W 100	10	
R4011,12	ERJ6GEY0R00	M.RESISTOR CH 1/10W 0	2	
R4013	ERJ6GEYJ271	M.RESISTOR CH1/10W 270	1	
R4014,15	ERJ6GEYJ272	M.RESISTOR CH1/10W 2.7K	2	
R4016	ERJ6GEYG153	M.RESISTOR CH1/10W 15K	1	
R4017	ERJ6GEYJ102	M.RESISTOR CH1/10W 1K	1	
R4018	ERJ6GEYJ221	M.RESISTOR CH1/10W 220	1	
R4019	ERJ6GEYJ392	M.RESISTOR CH1/10W 3.9K	1	
R4020	ERJ6GEYJ221	M.RESISTOR CH1/10W 220	1	
R4021,22	VRE0034E750	M.RESISTOR CH 1/10W 75	2	
R4023	ERJ6GEYJ122	M.RESISTOR CH1/10W 1.2K	1	
R4024	ERJ6GEYJ102	M.RESISTOR CH1/10W 1K	1	
R4025	ERJ6GEYJ271	M.RESISTOR CH1/10W 270	1	
R4026	ERJ6GEYJ222	M.RESISTOR CH1/10W 2.2K	1	
R4027	ERJ6GEYJ390	M.RESISTOR CH1/10W 39	1	
R4028,29	ERJ6GEYJ100	M.RESISTOR CH1/10W 10	2	
R4030,31	ERJ6GEYJ102	M.RESISTOR CH1/10W 1K	2	
R4032	ERJ6GEYJ101	M.RESISTOR CH1/10W 100	1	
R4033,34	ERJ6GEYJ105	M.RESISTOR CH1/10W 1M	2	
R4035	ERJ6GEYG181	M.RESISTOR CH1/10W 180	1	
R4036,37	ERJ6GEYJ103	M.RESISTOR CH1/10W 10K	2	
R4038	ERJ6GEYJ102	M.RESISTOR CH1/10W 1K	1	

Ref.No.	Part No.	Part Name & Description	Pcs	Remarks
R4039	ERJ6GEYJ222	M.RESISTOR CH1/10W 2.2K	1	
R4040	ERJ6GEYF472	M.RESISTOR CH1/10W 4.7K	1	
R4041	ERJ6GEYJ103	M.RESISTOR CH1/10W 10K	1	
R4042	ERJ6GEYJ222	M.RESISTOR CH1/10W 2.2K	1	
R4043,44	ERJ6GEYJ561	M.RESISTOR CH1/10W 560	2	
R4045	ERJ6GEYJ222	M.RESISTOR CH1/10W 2.2K	1	
R4046	ERJ6GEYJ101	M.RESISTOR CH1/10W 100	1	
R4047	ERJ6GEYJ561	M.RESISTOR CH1/10W 560	1	
R4048	ERJ6GEYJ471	M.RESISTOR CH1/10W 470	1	
R4049,50	ERJ6GEYJ102	M.RESISTOR CH1/10W 1K	2	
R4051	ERJ6GEYJ101	M.RESISTOR CH1/10W 100	1	
R4052	ERJ6GEYJ562	M.RESISTOR CH1/10W 5.6K	1	
R4053	ERJ6GEYJ223	M.RESISTOR CH1/10W 22K	1	
R4054	ERJ6GEYF472	M.RESISTOR CH1/10W 4.7K	1	
R4055,56	ERJ6GEYJ100	M.RESISTOR CH1/10W 10	2	
R4061	ERJ6GEYJ221	M.RESISTOR CH1/10W 220	1	
R4062	ERJ6GEYJ222	M.RESISTOR CH1/10W 2.2K	1	
R4063	ERJ6GEY0R00	M.RESISTOR CH 1/10W 0	1	
R4064	ERJ6GEYJ221	M.RESISTOR CH1/10W 220	1	
R4065	ERJ6GEYJ392	M.RESISTOR CH1/10W 3.9K	1	
R4066	ERJ6GEYJ221	M.RESISTOR CH1/10W 220	1	
R4067	VRE0034E750	M.RESISTOR CH 1/10W 75	1	
R4068	ERJ6GEYJ271	M.RESISTOR CH1/10W 270	1	
R4069	ERJ6GEYJ222	M.RESISTOR CH1/10W 2.2K	1	
R4070	ERJ6GEY0R00	M.RESISTOR CH 1/10W 0	1	
R4071	ERJ6GEYJ221	M.RESISTOR CH1/10W 220	1	
R4072	ERJ6GEYJ392	M.RESISTOR CH1/10W 3.9K	1	
R4073	ERJ6GEYJ221	M.RESISTOR CH1/10W 220	1	
R4074	VRE0034E750	M.RESISTOR CH 1/10W 75	1	
R4075	ERJ6GEYJ100	M.RESISTOR CH1/10W 10	1	
R4076	ERJ6GEYJ222	M.RESISTOR CH1/10W 2.2K	1	
R4077	ERJ6GEYJ221	M.RESISTOR CH1/10W 220	1	
R4078	ERJ6GEY0R00	M.RESISTOR CH 1/10W 0	1	
R4079	ERJ6GEYJ221	M.RESISTOR CH1/10W 220	1	
R4080	ERJ6GEYJ392	M.RESISTOR CH1/10W 3.9K	1	
R4081	ERJ6GEYJ221	M.RESISTOR CH1/10W 220	1	
R4082	VRE0034E750	M.RESISTOR CH 1/10W 75	1	
R4083	ERJ6GEYJ100	M.RESISTOR CH1/10W 10	1	
R4084-86	ERJ6GEYJ102	M.RESISTOR CH1/10W 1K	3	
R4087	ERJ6GEYJ561	M.RESISTOR CH1/10W 560	1	
R4088	ERJ6GEYJ221	M.RESISTOR CH1/10W 220	1	
R4089	ERJ6GEYJ222	M.RESISTOR CH1/10W 2.2K	1	
R4090	ERJ6GEY0R00	M.RESISTOR CH 1/10W 0	1	
R4091	ERJ6GEYJ221	M.RESISTOR CH1/10W 220	1	
R4092	ERJ6GEYJ392	M.RESISTOR CH1/10W 3.9K	1	
R4093	ERJ6GEYJ221	M.RESISTOR CH1/10W 220	1	
R4094,95	VRE0034E750	M.RESISTOR CH 1/10W 75	2	
R4096	ERJ6GEYG153	M.RESISTOR CH1/10W 15K	1	
R4097-00	ERJ6GEYJ272	M.RESISTOR CH1/10W 2.7K	4	
R4101-04	ERJ6GEYJ223	M.RESISTOR CH1/10W 22K	4	
R4105	ERJ6GEYJ563	M.RESISTOR CH1/10W 56K	1	
R4106	ERJ6GEYFI24	M.RESISTOR CH1/10W 120K	1	
R4107	VRE0034E622	M.RESISTOR CH 1/10W 6.2K	1	
R4111	EROS2CHF2201	M.RESISTOR 1/4W 2.2K	1	
R4201-13	ERJ6GEYJ103	M.RESISTOR CH1/10W 10K	13	
R4214	ERJ6GEYJ104	M.RESISTOR CH1/10W 100K	1	
R4221	ERJ6GEYJ101	M.RESISTOR CH1/10W 100	1	
R4222	ERJ6GEYJ102	M.RESISTOR CH1/10W 1K	1	
R4223,24	ERJ6GEYJ101	M.RESISTOR CH1/10W 100	2	
R4225	ERJ6GEY0R00	M.RESISTOR CH 1/10W 0	1	
R4226	ERJ6GEYJ824	M.RESISTOR CH1/10W 820K	1	
R4301-04	VRE0034E472	M.RESISTOR CH 1/10W 4.7K	4	
R4305	ERJ6GEYJ222	M.RESISTOR CH1/10W 2.2K	1	
R4306	ERJ6GEYJ392	M.RESISTOR CH1/10W 3.9K	1	
R4307	ERJ6GEYJ473	M.RESISTOR CH1/10W 47K	1	
R4308	ERJ6GEYJ102	M.RESISTOR CH1/10W 1K	1	
R4309	VRE0034E101	M.RESISTOR CH 1/10W 100	1	
R4310,11	ERJ6GEYJ103	M.RESISTOR CH1/10W 10K	2	
R4312	VRE0034E123	M.RESISTOR CH 1/10W 12K	1	
R4313	VRE0034E222	M.RESISTOR CH 1/10W 2.2K	1	
R4314	VRE0034E102	M.RESISTOR CH 1/10W 1K	1	
R4315	ERJ6GEYJ105	M.RESISTOR CH1/10W 1M	1	
R4316	VRE0034E223	M.RESISTOR CH 1/10W 22K	1	
R4317,18	ERJ6GEYJ103	M.RESISTOR CH1/10W 10K	2	
R4319	VRE0034E752	M.RESISTOR CH 1/10W 7.5K	1	

Ref.No.	Part No.	Part Name & Description	Pcs	Remarks
R4320	ERJ6GEYJ105	M.RESISTOR CH1/10W 1M	1	
R4321	VRE0034E104	M.RESISTOR CH 1/10W 100K	1	
R4322	ERJ6GEYJ101	M.RESISTOR CH1/10W 100	1	
R4323,24	VRE0034E152	M.RESISTOR CH 1/10W 1.5K	2	
R4325,26	VRE0034E222	M.RESISTOR CH 1/10W 2.2K	2	
R4327-32	VRE0034E472	M.RESISTOR CH 1/10W 4.7K	6	
R4333	VRE0034E512	M.RESISTOR CH 1/10W 5.1K	1	
R4334	ERJ6GEYJ103	M.RESISTOR CH1/10W 10K	1	
R4335,36	ERJ6GEYJ105	M.RESISTOR CH1/10W 1M	2	
R4337,38	ERJ6GEYJ101	M.RESISTOR CH1/10W 100	2	
R4339-42	VRE0034E510	M.RESISTOR CH 1/10W 51	4	
R4343	ERJ6GEYJ100	M.RESISTOR CH1/10W 10	1	
R4345	VRE0034E302	M.RESISTOR CH 1/10W 3K	1	
R4351-54	VRE0034E472	M.RESISTOR CH 1/10W 4.7K	4	
R4355	ERJ6GEYJ222	M.RESISTOR CH1/10W 2.2K	1	
R4356	ERJ6GEYJ392	M.RESISTOR CH1/10W 3.9K	1	
R4357	ERJ6GEYJ473	M.RESISTOR CH1/10W 47K	1	
R4358	ERJ6GEYJ102	M.RESISTOR CH1/10W 1K	1	
R4359	VRE0034E101	M.RESISTOR CH 1/10W 100	1	
R4360,61	ERJ6GEYJ103	M.RESISTOR CH1/10W 10K	2	
R4362	VRE0034E123	M.RESISTOR CH 1/10W 12K	1	
R4363	VRE0034E222	M.RESISTOR CH 1/10W 2.2K	1	
R4364	VRE0034E102	M.RESISTOR CH 1/10W 1K	1	
R4365	ERJ6GEYJ105	M.RESISTOR CH1/10W 1M	1	
R4366	VRE0034E223	M.RESISTOR CH 1/10W 22K	1	
R4367,68	ERJ6GEYJ103	M.RESISTOR CH1/10W 10K	2	
R4369	VRE0034E752	M.RESISTOR CH 1/10W 7.5K	1	
R4370	ERJ6GEYJ105	M.RESISTOR CH1/10W 1M	1	
R4371	VRE0034E104	M.RESISTOR CH 1/10W 100K	1	
R4372	ERJ6GEYJ101	M.RESISTOR CH1/10W 100	1	
R4373,74	VRE0034E152	M.RESISTOR CH 1/10W 1.5K	2	
R4375,76	VRE0034E222	M.RESISTOR CH 1/10W 2.2K	2	
R4377-82	VRE0034E472	M.RESISTOR CH 1/10W 4.7K	6	
R4383	VRE0034E512	M.RESISTOR CH 1/10W 5.1K	1	
R4384	ERJ6GEYJ103	M.RESISTOR CH1/10W 10K	1	
R4385,86	ERJ6GEYJ105	M.RESISTOR CH1/10W 1M	2	
R4387,88	ERJ6GEYJ101	M.RESISTOR CH1/10W 100	2	
R4389-92	VRE0034E510	M.RESISTOR CH 1/10W 51	4	
R4393	ERJ6GEYJ100	M.RESISTOR CH1/10W 10	1	
R4395	VRE0034E302	M.RESISTOR CH 1/10W 3K	1	
R4401-04	VRE0034E472	M.RESISTOR CH 1/10W 4.7K	4	
R4405	ERJ6GEYJ222	M.RESISTOR CH1/10W 2.2K	1	
R4406	ERJ6GEYJ392	M.RESISTOR CH1/10W 3.9K	1	
R4407	ERJ6GEYJ473	M.RESISTOR CH1/10W 47K	1	
R4408	ERJ6GEYJ102	M.RESISTOR CH1/10W 1K	1	
R4409	VRE0034E101	M.RESISTOR CH 1/10W 100	1	
R4410,11	ERJ6GEYJ103	M.RESISTOR CH1/10W 10K	2	
R4412	VRE0034E123	M.RESISTOR CH 1/10W 12K	1	
R4413	VRE0034E222	M.RESISTOR CH 1/10W 2.2K	1	
R4414	VRE0034E102	M.RESISTOR CH 1/10W 1K	1	
R4415	ERJ6GEYJ105	M.RESISTOR CH1/10W 1M	1	
R4416	VRE0034E223	M.RESISTOR CH 1/10W 22K	1	
R4417,18	ERJ6GEYJ103	M.RESISTOR CH1/10W 10K	2	
R4419	VRE0034E752	M.RESISTOR CH 1/10W 7.5K	1	
R4420	ERJ6GEYJ105	M.RESISTOR CH1/10W 1M	1	
R4421	VRE0034E104	M.RESISTOR CH 1/10W 100K	1	
R4422	ERJ6GEYJ101	M.RESISTOR CH1/10W 100	1	
R4423,24	VRE0034E152	M.RESISTOR CH 1/10W 1.5K	2	
R4425,26	VRE0034E222	M.RESISTOR CH 1/10W 2.2K	2	
R4427-32	VRE0034E472	M.RESISTOR CH 1/10W 4.7K	6	
R4433	VRE0034E512	M.RESISTOR CH 1/10W 5.1K	1	
R4434	ERJ6GEYJ103	M.RESISTOR CH1/10W 10K	1	
R4435,36	ERJ6GEYJ105	M.RESISTOR CH1/10W 1M	2	
R4437,38	ERJ6GEYJ101	M.RESISTOR CH1/10W 100	2	
R4439-42	VRE0034E510	M.RESISTOR CH 1/10W 51	4	
R4443	ERJ6GEYJ100	M.RESISTOR CH1/10W 10	1	
R4445	VRE0034E302	M.RESISTOR CH 1/10W 3K	1	
R4451-54	VRE0034E472	M.RESISTOR CH 1/10W 4.7K	4	
R4455	ERJ6GEYJ222	M.RESISTOR CH1/10W 2.2K	1	
R4456	ERJ6GEYJ392	M.RESISTOR CH1/10W 3.9K	1	
R4457	ERJ6GEYJ473	M.RESISTOR CH1/10W 47K	1	
R4458	ERJ6GEYJ102	M.RESISTOR CH1/10W 1K	1	
R4459	VRE0034E101	M.RESISTOR CH 1/10W 100	1	
R4460,61	ERJ6GEYJ103	M.RESISTOR CH1/10W 10K	2	
R4462	VRE0034E123	M.RESISTOR CH 1/10W 12K	1	

Ref.No.	Part No.	Part Name & Description	Pcs	Remarks
R4463	VRE0034E222	M.RESISTOR CH 1/10W 2.2K	1	
R4464	VRE0034E102	M.RESISTOR CH 1/10W 1K	1	
R4465	ERJ6GEYJ105	M.RESISTOR CH1/10W 1M	1	
R4466	VRE0034E223	M.RESISTOR CH 1/10W 22K	1	
R4467,68	ERJ6GEYJ103	M.RESISTOR CH1/10W 10K	2	
R4469	VRE0034E752	M.RESISTOR CH 1/10W 7.5K	1	
R4470	ERJ6GEYJ105	M.RESISTOR CH1/10W 1M	1	
R4471	VRE0034E104	M.RESISTOR CH 1/10W 100K	1	
R4472	ERJ6GEYJ101	M.RESISTOR CH1/10W 100	1	
R4473,74	VRE0034E152	M.RESISTOR CH 1/10W 1.5K	2	
R4475,76	VRE0034E222	M.RESISTOR CH 1/10W 2.2K	2	
R4477-82	VRE0034E472	M.RESISTOR CH 1/10W 4.7K	6	
R4483	VRE0034E512	M.RESISTOR CH 1/10W 5.1K	1	
R4484	ERJ6GEYJ103	M.RESISTOR CH1/10W 10K	1	
R4485,86	ERJ6GEYJ105	M.RESISTOR CH1/10W 1M	2	
R4487,88	ERJ6GEYJ101	M.RESISTOR CH1/10W 100	2	
R4489-92	VRE0034E510	M.RESISTOR CH 1/10W 51	4	
R4493	ERJ6GEYJ100	M.RESISTOR CH1/10W 10	1	
R4495	VRE0034E302	M.RESISTOR CH 1/10W 3K	1	
R4501,02	ERJ6GEY0R00	M.RESISTOR CH 1/10W 0	2	
R4601,02	ERDS2TJ100	C.RESISTOR 1/4W 10	2	
R4603	ERDS2TJ2R2	C.RESISTOR 1/4W 2.2	1	
R4604-07	ERJ6GEYJ102	M.RESISTOR CH1/10W 1K	4	
R4608-11	VRE0034E333	M.RESISTOR CH 1/10W 33K	4	
R4612-15	VRE0034E223	M.RESISTOR CH 1/10W 22K	4	
R4616-19	VRE0034E473	M.RESISTOR CH 1/10W 47K	4	
R4620,21	VRE0034E822	M.RESISTOR CH 1/10W 8.2K	2	
R4622,23	VRE0034E222	M.RESISTOR CH 1/10W 2.2K	2	
R4624,25	VRE0034E182	M.RESISTOR CH 1/10W 1.8K	2	
R4626	VRE0034E272	M.RESISTOR CH 1/10W 2.7K	1	
R4627,28	VRE0034E222	M.RESISTOR CH 1/10W 2.2K	2	
R4629,30	VRE0034E472	M.RESISTOR CH 1/10W 4.7K	2	
R4631,32	VRE0034E102	M.RESISTOR CH 1/10W 1K	2	
R4633,34	VRE0034E103	M.RESISTOR CH 1/10W 10K	2	
R4635-37	VRE0034E223	M.RESISTOR CH 1/10W 22K	3	
R4638	VRE0034E222	M.RESISTOR CH 1/10W 2.2K	1	
R4639	ERJ6GEYJ105	M.RESISTOR CH1/10W 1M	1	
R4640	ERJ6GEYF472	M.RESISTOR CH1/10W 4.7K	1	
R4641-43	ERJ6GEYJ103	M.RESISTOR CH1/10W 10K	3	
R4644,45	ERDS2TJ150	C.RESISTOR 1/4W 15	2	
R4646,47	ERDS2TJ100	C.RESISTOR 1/4W 10	2	
R4648	ERJ6GEYJ102	M.RESISTOR CH1/10W 1K	1	
R4649-52	VRE0034E333	M.RESISTOR CH 1/10W 33K	4	
R4653-56	VRE0034E223	M.RESISTOR CH 1/10W 22K	4	
R4657-60	VRE0034E473	M.RESISTOR CH 1/10W 47K	4	
R4661,62	VRE0034E822	M.RESISTOR CH 1/10W 8.2K	2	
R4663,64	VRE0034E222	M.RESISTOR CH 1/10W 2.2K	2	
R4665,66	VRE0034E182	M.RESISTOR CH 1/10W 1.8K	2	
R4667	VRE0034E272	M.RESISTOR CH 1/10W 2.7K	1	
R4668,69	VRE0034E222	M.RESISTOR CH 1/10W 2.2K	2	
R4670,71	VRE0034E472	M.RESISTOR CH 1/10W 4.7K	2	
R4672,73	VRE0034E102	M.RESISTOR CH 1/10W 1K	2	
R4674,75	VRE0034E103	M.RESISTOR CH 1/10W 10K	2	
R4676-78	VRE0034E223	M.RESISTOR CH 1/10W 22K	3	
R4679	VRE0034E222	M.RESISTOR CH 1/10W 2.2K	1	
R4680	ERJ6GEYJ105	M.RESISTOR CH1/10W 1M	1	
R4681	ERJ6GEYF472	M.RESISTOR CH1/10W 4.7K	1	
R4682-84	ERJ6GEYJ103	M.RESISTOR CH1/10W 10K	3	
R4686,87	ERDS2TJ150	C.RESISTOR 1/4W 15	2	
R4691,92	VRE0034E123	M.RESISTOR CH 1/10W 12K	2	
R4693,94	VRE0034E102	M.RESISTOR CH 1/10W 1K	2	
R4695	ERJ6GEYJ221	M.RESISTOR CH1/10W 220	1	
R4696	ERJ6GEYJ102	M.RESISTOR CH1/10W 1K	1	
R4698	ERJ6GEY0R00	M.RESISTOR CH 1/10W 0	1	
R4701,02	ERDS2TJ100	C.RESISTOR 1/4W 10	2	
R4703	ERDS2TJ2R2	C.RESISTOR 1/4W 2.2	1	
R4704-07	ERJ6GEYJ102	M.RESISTOR CH1/10W 1K	4	
R4708-11	VRE0034E333	M.RESISTOR CH 1/10W 33K	4	
R4712-15	VRE0034E223	M.RESISTOR CH 1/10W 22K	4	
R4716-19	VRE0034E473	M.RESISTOR CH 1/10W 47K	4	
R4720,21	VRE0034E822	M.RESISTOR CH 1/10W 8.2K	2	
R4722,23	VRE0034E222	M.RESISTOR CH 1/10W 2.2K	2	
R4724,25	VRE0034E182	M.RESISTOR CH 1/10W 1.8K	2	
R4726	VRE0034E272	M.RESISTOR CH 1/10W 2.7K	1	
R4727,28	VRE0034E222	M.RESISTOR CH 1/10W 2.2K	2	

Ref.No.	Part No.	Part Name & Description	Pcs	Remarks
R4729,30	VRE0034E472	M.RESISTOR CH 1/10W 4.7K	2	
R4731,32	VRE0034E102	M.RESISTOR CH 1/10W 1K	2	
R4733,34	VRE0034E103	M.RESISTOR CH 1/10W 10K	2	
R4735-37	VRE0034E223	M.RESISTOR CH 1/10W 22K	3	
R4738	VRE0034E222	M.RESISTOR CH 1/10W 2.2K	1	
R4739	ERJ6GEYJ105	M.RESISTOR CH1/10W 1M	1	
R4740	ERJ6GEYF472	M.RESISTOR CH1/10W 4.7K	1	
R4741-43	ERJ6GEYJ103	M.RESISTOR CH1/10W 10K	3	
R4744,45	ERDS2TJ150	C.RESISTOR 1/4W 15	2	
R4746,47	ERDS2TJ100	C.RESISTOR 1/4W 10	2	
R4748	ERJ6GEYJ102	M.RESISTOR CH1/10W 1K	1	
R4749-52	VRE0034E333	M.RESISTOR CH 1/10W 33K	4	
R4753-56	VRE0034E223	M.RESISTOR CH 1/10W 22K	4	
R4757-60	VRE0034E473	M.RESISTOR CH 1/10W 47K	4	
R4761,62	VRE0034E822	M.RESISTOR CH 1/10W 8.2K	2	
R4763,64	VRE0034E222	M.RESISTOR CH 1/10W 2.2K	2	
R4765,66	VRE0034E182	M.RESISTOR CH 1/10W 1.8K	2	
R4767	VRE0034E272	M.RESISTOR CH 1/10W 2.7K	1	
R4768,69	VRE0034E222	M.RESISTOR CH 1/10W 2.2K	2	
R4770,71	VRE0034E472	M.RESISTOR CH 1/10W 4.7K	2	
R4772,73	VRE0034E102	M.RESISTOR CH 1/10W 1K	2	
R4774,75	VRE0034E103	M.RESISTOR CH 1/10W 10K	2	
R4776-78	VRE0034E223	M.RESISTOR CH 1/10W 22K	3	
R4779	VRE0034E222	M.RESISTOR CH 1/10W 2.2K	1	
R4780	ERJ6GEYJ105	M.RESISTOR CH1/10W 1M	1	
R4781	ERJ6GEYF472	M.RESISTOR CH1/10W 4.7K	1	
R4782-84	ERJ6GEYJ103	M.RESISTOR CH1/10W 10K	3	
R4786,87	ERDS2TJ150	C.RESISTOR 1/4W 15	2	
R4791,92	VRE0034E123	M.RESISTOR CH 1/10W 12K	2	
R4793,94	VRE0034E102	M.RESISTOR CH 1/10W 1K	2	
R4795	ERJ6GEYJ221	M.RESISTOR CH1/10W 220	1	
R4798	ERJ6GEY0R00	M.RESISTOR CH 1/10W 0	1	
R4801,02	ERDS2TJ100	C.RESISTOR 1/4W 10	2	
R4803	ERDS2TJ2R2	C.RESISTOR 1/4W 2.2	1	
R4804-07	ERJ6GEYJ102	M.RESISTOR CH1/10W 1K	4	
R4808-11	VRE0034E333	M.RESISTOR CH 1/10W 33K	4	
R4812-15	VRE0034E223	M.RESISTOR CH 1/10W 22K	4	
R4816-19	VRE0034E473	M.RESISTOR CH 1/10W 47K	4	
R4820,21	VRE0034E822	M.RESISTOR CH 1/10W 8.2K	2	
R4822,23	VRE0034E222	M.RESISTOR CH 1/10W 2.2K	2	
R4824,25	VRE0034E182	M.RESISTOR CH 1/10W 1.8K	2	
R4826	VRE0034E272	M.RESISTOR CH 1/10W 2.7K	1	
R4827,28	VRE0034E222	M.RESISTOR CH 1/10W 2.2K	2	
R4829,30	VRE0034E472	M.RESISTOR CH 1/10W 4.7K	2	
R4831,32	VRE0034E102	M.RESISTOR CH 1/10W 1K	2	
R4833,34	VRE0034E103	M.RESISTOR CH 1/10W 10K	2	
R4835-37	VRE0034E223	M.RESISTOR CH 1/10W 22K	3	
R4838	VRE0034E222	M.RESISTOR CH 1/10W 2.2K	1	
R4839	ERJ6GEYJ105	M.RESISTOR CH1/10W 1M	1	
R4840	ERJ6GEYF472	M.RESISTOR CH1/10W 4.7K	1	
R4841-43	ERJ6GEYJ103	M.RESISTOR CH1/10W 10K	3	
R4844,45	ERDS2TJ150	C.RESISTOR 1/4W 15	2	
R4846,47	ERDS2TJ100	C.RESISTOR 1/4W 10	2	
R4848	ERJ6GEYJ102	M.RESISTOR CH1/10W 1K	1	
R4849-52	VRE0034E333	M.RESISTOR CH 1/10W 33K	4	
R4853-56	VRE0034E223	M.RESISTOR CH 1/10W 22K	4	
R4857-60	VRE0034E473	M.RESISTOR CH 1/10W 47K	4	
R4861,62	VRE0034E822	M.RESISTOR CH 1/10W 8.2K	2	
R4863,64	VRE0034E222	M.RESISTOR CH 1/10W 2.2K	2	
R4865,66	VRE0034E182	M.RESISTOR CH 1/10W 1.8K	2	
R4867	VRE0034E272	M.RESISTOR CH 1/10W 2.7K	1	
R4868,69	VRE0034E222	M.RESISTOR CH 1/10W 2.2K	2	
R4870,71	VRE0034E472	M.RESISTOR CH 1/10W 4.7K	2	
R4872,73	VRE0034E102	M.RESISTOR CH 1/10W 1K	2	
R4874,75	VRE0034E103	M.RESISTOR CH 1/10W 10K	2	
R4876-78	VRE0034E223	M.RESISTOR CH 1/10W 22K	3	
R4879	VRE0034E222	M.RESISTOR CH 1/10W 2.2K	1	
R4880	ERJ6GEYJ105	M.RESISTOR CH1/10W 1M	1	
R4881	ERJ6GEYF472	M.RESISTOR CH1/10W 4.7K	1	
R4882-84	ERJ6GEYJ103	M.RESISTOR CH1/10W 10K	3	
R4886,87	ERDS2TJ150	C.RESISTOR 1/4W 15	2	
R4891,92	VRE0034E123	M.RESISTOR CH 1/10W 12K	2	
R4893,94	VRE0034E102	M.RESISTOR CH 1/10W 1K	2	
R4895	ERJ6GEYJ221	M.RESISTOR CH1/10W 220	1	
R4898	ERJ6GEY0R00	M.RESISTOR CH 1/10W 0	1	

L2 VIDEO/AUDIO REC VEP88072D
L2 SUB VEP88081A

Ref.No.	Part No.	Part Name & Description	Pcs	Remarks
R4901	ERDS2TJ181	C.RESISTOR 1/4W 180	1	
RY4001	VSY2039	RELAY	1	
RY4301-04	VSY2039	RELAY	4	
RY4601-06	VSY2039	RELAY	6	
TH4001	ERTD2FHL802S	THERMISTOR 8K	1	
TP4001-07	VJR0646	TEST POINT	7	
TP4301-06	VJR0646	TEST POINT	6	
TP4311-16	VJR0646	TEST POINT	6	
TP4601-06	VJR0646	TEST POINT	6	
TPG4001,02	VJR0646	TEST POINT	2	
TPG4201	VJR0646	TEST POINT	1	
TPG4301-04	VJR0646	TEST POINT	4	
TPG4601-06	VJR0646	TEST POINT	6	
VR4001	VRV0064B102	V.RESISTOR 1K	1	
VR4002	VRV0109B102	V.RESISTOR 1K	1	
VR4004	VRV0109B502	V.RESISTOR 5K	1	
VR4005	VRV0109B202	V.RESISTOR 2K	1	
VR4006	VRV0109B102	V.RESISTOR 1K	1	
VR4301-04	VRV0109B103	V.RESISTOR 10K	4	
VR4601-06	VRV0109B103	V.RESISTOR 10K	6	
		MISCELLANEOUS		
	VGQ0291	P.C.BOARD NAME PLATE	1	
	VJF0300	BINDER	16	
	VML2143	CARD PULLER	1	
	VML2144	CARD PULLER	1	
	VMP3048	P.C.BOARD HOLDER ANGLE	2	
	VSC3322	SHIELD CASE	1	
	VSC3323	SHIELD CASE	1	
	VSC3324	SHIELD CASE	1	
	VSC3325	SHIELD CASE	1	
	VSC3332	SHIELD CASE	1	
	VSC3333	SHIELD CASE	1	
	VXA4418	P.C.BOARD SHIELD PLATE	1	
	XNG26E	NUT	4	
	XTV3+6FFR	SCREW	9	
	XYN26+C12	SCREW	4	
	VEP88072D	P.C.BOARD W/COMPONENT		
		L2 VIDEO/AUDIO REC		
	VEP88081A	P.C.BOARD W/COMPONENT		FOR VEP88072D
		L2 SUB		
		CAPACITORS		
C2-C5	ECUM1E104ZFN	E.CAPACITOR 25V 0.1U	4	
C6	ECUM1H104ZFN	C.CAPACITOR CH 50V 0.1U	1	
C8001-04	ECA1CXLV101	E.CAPACITOR 16V 100U	4	
C8005	ECUM1E104ZFN	E.CAPACITOR 25V 0.1U	1	
C8101,02	ECUM1E104ZFN	E.CAPACITOR 25V 0.1U	2	
C8103	ECUM1H103KBN	C.CAPACITOR CH 50V 0.01U	1	
C8104-10	ECUM1E104ZFN	E.CAPACITOR 25V 0.1U	7	
C8111,12	ECUM1H821JCN	C.CAPACITOR CH 50V 820P	2	
C8113	ECUM1E104ZFN	E.CAPACITOR 25V 0.1U	1	

Ref.No.	Part No.	Part Name & Description	Pcs	Remarks
C8114	ECKF1H103ZF	C.CAPACITOR 50V 0.01U	1	
C8401	ECCF1H101JC	C.CAPACITOR 50V 100P	1	
C8501-11	ECUM1E104ZFN	E.CAPACITOR 25V 0.1U	11	
C8512-15	ECUM1H102JCN	C.CAPACITOR CH 50V 1000P	4	
C8520	ECCF1H101JC	C.CAPACITOR 50V 100P	1	
C8602	ECUM1E104ZFN	E.CAPACITOR 25V 0.1U	1	
C8604	ECUM1E104ZFN	E.CAPACITOR 25V 0.1U	1	
C8605	ECA1CXS100	E.CAPACITOR 16V 10U	1	
C8606	ECUM1E104ZFN	E.CAPACITOR 25V 0.1U	1	
C8607	ECUM1H150JCN	C.CAPACITOR CH 50V 15P	1	
C8609	ECUM1E104ZFN	E.CAPACITOR 25V 0.1U	1	
C8611	ECUM1E104ZFN	E.CAPACITOR 25V 0.1U	1	
C8612	ECA1CXS100	E.CAPACITOR 16V 10U	1	
C8613	ECUM1E104ZFN	E.CAPACITOR 25V 0.1U	1	
C8614	ECUM1H680JCN	C.CAPACITOR CH 50V 68P	1	
C8616	ECUM1E104ZFN	E.CAPACITOR 25V 0.1U	1	
C8618	ECUM1E104ZFN	E.CAPACITOR 25V 0.1U	1	
C8619	ECA1CXS100	E.CAPACITOR 16V 10U	1	
C8620	ECUM1E104ZFN	E.CAPACITOR 25V 0.1U	1	
C8621	ECUM1H220JCN	C.CAPACITOR CH 50V 22P	1	
C8622	ECUM1E104ZFN	E.CAPACITOR 25V 0.1U	1	
C8623-25	ECA1HXS010	E.CAPACITOR 50V 1U	3	
C8626	ECUM1C104KBN	C.CAPACITOR CH 16V 0.1U	1	
C8627,28	ECUM1H103KBN	C.CAPACITOR CH 50V 0.01U	2	
C8651,52	ECUM1E104ZFN	E.CAPACITOR 25V 0.1U	2	
C8653	ECA1CXLV101	E.CAPACITOR 16V 100U	1	
C8654,55	ECUM1E104ZFN	E.CAPACITOR 25V 0.1U	2	
C8658	ECA1HXNV3R3	E.CAPACITOR 50V 3.3U	1	
C8659,60	ECUM1E104ZFN	E.CAPACITOR 25V 0.1U	2	
C8661	ECA1CXLV101	E.CAPACITOR 16V 100U	1	
C8662,63	ECA1HXSOR1	E.CAPACITOR 50V 0.1U	2	
C8667	ECUM1H470JCN	C.CAPACITOR CH 50V 47P	1	
C8668	ECUM1E104ZFN	E.CAPACITOR 25V 0.1U	1	
C8669	ECA1CXS100	E.CAPACITOR 16V 10U	1	
C8670	ECUM1H470JCN	C.CAPACITOR CH 50V 47P	1	
C8671	ECUM1E104ZFN	E.CAPACITOR 25V 0.1U	1	
C8672	ECA1CXS100	E.CAPACITOR 16V 10U	1	
C8687	ECUM1H180JCN	C.CAPACITOR CH 50V 18P	1	
C8701,02	ECUM1E104ZFN	E.CAPACITOR 25V 0.1U	2	
C8703	ECA1CXLV101	E.CAPACITOR 16V 100U	1	
C8704,05	ECUM1E104ZFN	E.CAPACITOR 25V 0.1U	2	
C8708	ECA1HXNV3R3	E.CAPACITOR 50V 3.3U	1	
C8711	ECUM1H470JCN	C.CAPACITOR CH 50V 47P	1	
C8712	ECUM1E104ZFN	E.CAPACITOR 25V 0.1U	1	
C8713	ECA1CXS100	E.CAPACITOR 16V 10U	1	
C8801,02	ECUM1E104ZFN	E.CAPACITOR 25V 0.1U	2	
C8803	ECA1CXLV101	E.CAPACITOR 16V 100U	1	
C8804,05	ECA1HXSOR1	E.CAPACITOR 50V 0.1U	2	
C8809	ECUM1H470JCN	C.CAPACITOR CH 50V 47P	1	
C8810	ECUM1E104ZFN	E.CAPACITOR 25V 0.1U	1	
C8811	ECA1CXS100	E.CAPACITOR 16V 10U	1	
CN003,04	VJP3151	CONNECTOR (MALE)	2	
D8601,02	MA151K	DIODE	2	
IC1	SLA7160F3M	IC	1	
IC2	SN74AS244NS	IC	1	
IC8001-04	SN74LS541NS	IC	4	
IC8005	MC10H124L	IC	1	
IC8051	MC74HC573AF	IC	1	
IC8052	VSI0788B	IC	1	
IC8053	VSI0799	IC	1	
IC8054	CY7C1363JC	IC	1	
IC8055,56	UPD71055GB	IC	2	
IC8057	MC74HC574AF	IC	1	
IC8058	MC74HC541AF	IC	1	
IC8059	VSI0774B	IC	1	
IC8101,02	MC10125L	IC	2	

Ref.No.	Part No.	Part Name & Description	Pcs	Remarks
IC8103,04	SN74LS399NS	IC	2	
IC8105	SN74LS123NS	IC	1	
IC8106	MC10115L	IC	1	
IC8107	MC10104L	IC	1	
IC8108	MC10116L	IC	1	
IC8109	MC10124L	IC	1	
IC8110	MC10115L	IC	1	
IC8111	MC10125L	IC	1	
IC8112	SN74AS244NS	IC	1	
IC8113	MC10125L	IC	1	
IC8114	VSI0950B	IC	1	
IC8151	VSI0800	IC	1	
IC8152	VSI0952B	IC	1	
IC8153	VSI0801A	IC	1	
IC8154	VSI0796A	IC	1	
IC8155	SN74LS399NS	IC	1	
IC8157	UPD42101G-3	IC	1	
IC8201,02	SN74LS541NS	IC	2	
IC8203	CY7C1363JC	IC	1	
IC8204	L7A0545	IC	1	
IC8205	ADM50ND	IC	1	
IC8206	SN74AS244NS	IC	1	
IC8207	VSI0787	IC	1	
IC8208-10	SN74LS541NS	IC	3	
IC8211,12	MC74HC574AN	IC	2	
IC8213	SN74AS244NS	IC	1	
IC8251-54	74FCT574ASC	IC	4	
IC8255	K6810ALG7L	IC	1	
IC8256	K6256BLG7L	IC	1	
IC8257	K6810ALG7L	IC	1	
IC8258	K6256BLG7L	IC	1	
IC8259,60	SN74AS244NS	IC	2	
IC8261	ADM50ND	IC	1	
IC8262	UPD65061F032	IC	1	
IC8301-04	74FCT574ASC	IC	4	
IC8305	K6810ALG7L	IC	1	
IC8306	K6256BLG7L	IC	1	
IC8307	K6810ALG7L	IC	1	
IC8308	K6256BLG7L	IC	1	
IC8309,10	SN74AS244NS	IC	2	
IC8311	ADM50ND	IC	1	
IC8312	UPD65061F032	IC	1	
IC8351	VSI0769B	IC	1	
IC8352	VSI0790	IC	1	
IC8353	VSI0789	IC	1	
IC8354,55	IDTFCT825ASO	IC	2	
IC8356	SN74LS399N	IC	1	
IC8357	VSI0771B	IC	1	
IC8358	VSI0770B	IC	1	
IC8359	IDTFCT825AP	IC	1	
IC8360	VSI0772B	IC	1	
IC8361	VSI0786B	IC	1	
IC8362	VSI0772B	IC	1	
IC8401,02	MC74HC541AN	IC	2	
IC8403	MC74HC541AF	IC	1	
IC8404	MC74HC574AN	IC	1	
IC8405	L7A0341	IC	1	
IC8406,07	MC74HC541AN	IC	2	
IC8408	MC74HC541AF	IC	1	
IC8409	MC74HC574AN	IC	1	
IC8410	L7A0341	IC	1	
IC8411,12	IDTFCT825ASO	IC	2	
IC8413	VSI0784B	IC	1	
IC8414	VSI0785	IC	1	
IC8415-17	SN74LS541NS	IC	3	
IC8451	VSI0781	IC	1	
IC8452,53	MC74HC86F	IC	2	
IC8454	VSI0783	IC	1	
IC8455	VSI0793	IC	1	
IC8456	VSI0794	IC	1	
IC8457	VSI0795	IC	1	
IC8458,59	MC74HC574AN	IC	2	
IC8460	VSI0782B	IC	1	
IC8461,62	MC74HC86F	IC	2	
IC8463	VSI0783	IC	1	

Ref.No.	Part No.	Part Name & Description	Pcs	Remarks
IC8464	VSI0793	IC	1	
IC8465	VSI0794	IC	1	
IC8466	VSI0795	IC	1	
IC8467,68	MC74HC574AN	IC	2	
IC8469	VSI0782B	IC	1	
IC8501,02	UPD42505C-50	IC	2	
IC8503	VSI0773B	IC	1	
IC8504-07	IDTFCT399ASO	IC	4	
IC8508	MB121M246	IC	1	
IC8509	VSX0467	CRYSTAL OSCILLATOR	1	
IC8510-12	MC10116L	IC	3	
IC8513	MC10115L	IC	1	
IC8514	MC10104L	IC	1	
IC8515	MC10125L	IC	1	
IC8516-20	SN74AS244NS	IC	5	
IC8551,52	MC74HC541AN	IC	2	
IC8553	L7A0674	IC	1	
IC8554,55	HM62832HP35	IC	2	
IC8556	MB81C78A35PF	IC	1	
IC8601	TC9122P	IC	1	
IC8602	MC4044P	IC	1	
IC8603	TC9122P	IC	1	
IC8605	AN78L05	IC	1	
IC8606	SN74LS628NS	IC	1	
IC8607	74F74SJ	IC	1	
IC8608	MC74HC393F	IC	1	
IC8609	MC4044P	IC	1	
IC8610	TC9122P	IC	1	
IC8612	AN78L05	IC	1	
IC8613	SN74LS628NS	IC	1	
IC8614	SN74LS92NS	IC	1	
IC8615	MC4044P	IC	1	
IC8616	MC74HC163AF	IC	1	
IC8618	AN78L05	IC	1	
IC8619	SN74LS629NS	IC	1	
IC8620-22	MC74HC574AF	IC	3	
IC8623	VSI0942A	IC	1	
IC8651	AN78L05	IC	1	
IC8652	MC74HC157AF	IC	1	
IC8653	MC4044P	IC	1	
IC8655,56	MC74HC163AF	IC	2	
IC8657	MC74HC04AF	IC	1	
IC8658,59	MC74HC163AF	IC	2	
IC8660	SN74LS123NS	IC	1	
IC8661	AN78L05	IC	1	
IC8662	MC4044P	IC	1	
IC8664	74F74SJ	IC	1	
IC8665	TC9122P	IC	1	
IC8666	VSX0450	CRYSTAL OSCILLATOR	1	
IC8667	MC74HC04AF	IC	1	
IC8668	VSX0392	CRYSTAL OSCILLATOR	1	
IC8669	CD74AC04M	IC	1	
IC8670	MC74HC74AF	IC	1	
IC8701	AN78L05	IC	1	
IC8702,03	MC74HC163AF	IC	2	
IC8704	MC4044P	IC	1	
IC8706	MC74HC157AF	IC	1	
IC8707,08	MC74HC163AF	IC	2	
IC8709	MC74HC04AF	IC	1	
IC8710	74F153SJ	IC	1	
IC8711	74F74SJ	IC	1	
IC8712	SN74LS123NS	IC	1	
IC8713	VSI0941B	IC	1	
IC8714	VSX0450	CRYSTAL OSCILLATOR	1	
IC8715	MC74HC04AF	IC	1	
IC8751	VSI0933A	IC	1	
IC8752	VSI0935A	IC	1	
IC8753	VSI0937D	IC	1	
IC8754	VSI0939	IC	1	
IC8755	VSI0943	IC	1	
IC8760	SN74LS151NS	IC	1	
IC8761	MC74HC04AF	IC	1	
IC8801	SN74LS92NS	IC	1	
IC8802	AN78L05	IC	1	
IC8803	MC4044P	IC	1	

Ref.No.	Part No.	Part Name & Description	Pcs	Remarks
IC8805	74F163ASJ	IC	1	
IC8806	VSX0391	CRYSTAL OSCILLATOR	1	
IC8807	CD74AC04M	IC	1	
IC156S1,S2	VJS3185	CONNECTOR (FEMALE)	2	
ICS8108,09	VJS3123	CONNECTOR (FEMALE)	2	
ICS8114	VJS2575	CONNECTOR (FEMALE)	1	
ICS8151,52	VJS3122A044	CONNECTOR (FEMALE)	2	
ICS8353	VJS3096328	CONNECTOR (FEMALE)	1	
ICS8455-57	VJS2726	CONNECTOR (FEMALE)	3	
ICS8464-66	VJS2726	CONNECTOR (FEMALE)	3	
ICS8751	VJS3096328	CONNECTOR (FEMALE)	1	
ICS8753	VJS3096328	CONNECTOR (FEMALE)	1	
J8201,02	ERJ6GEY0R00	M.RESISTOR CH 1/10W 0	2	
J8251-53	ERJ6GEY0R00	M.RESISTOR CH 1/10W 0	3	
J8301-03	ERJ6GEY0R00	M.RESISTOR CH 1/10W 0	3	
J8351,52	ERJ6GEY0R00	M.RESISTOR CH 1/10W 0	2	
L8001-04	VLF0931	FILTER	4	
OSC8501	VSX0452	CRYSTAL OSCILLATOR	1	
P001	VJP1245T	CONNECTOR (MALE)	1	
P1,P2	VJP2509	CONNECTOR (MALE)	2	
PC8001-05	ECUM1E104ZFN	E.CAPACITOR 25V 0.1U	5	
PC8051-59	ECUM1E104ZFN	E.CAPACITOR 25V 0.1U	9	
PC8101-14	ECUM1E104ZFN	E.CAPACITOR 25V 0.1U	14	
PC8151-57	ECUM1E104ZFN	E.CAPACITOR 25V 0.1U	7	
PC8201-13	ECUM1E104ZFN	E.CAPACITOR 25V 0.1U	13	
PC8251-62	ECUM1E104ZFN	E.CAPACITOR 25V 0.1U	12	
PC8301-12	ECUM1E104ZFN	E.CAPACITOR 25V 0.1U	12	
PC8351-62	ECUM1E104ZFN	E.CAPACITOR 25V 0.1U	12	
PC8401-17	ECUM1E104ZFN	E.CAPACITOR 25V 0.1U	17	
PC8451-69	ECUM1E104ZFN	E.CAPACITOR 25V 0.1U	19	
PC8501-20	ECUM1E104ZFN	E.CAPACITOR 25V 0.1U	20	
PC8551-56	ECUM1E104ZFN	E.CAPACITOR 25V 0.1U	6	
PC8601-23	ECUM1E104ZFN	E.CAPACITOR 25V 0.1U	23	
PC8651-53	ECUM1E104ZFN	E.CAPACITOR 25V 0.1U	3	
PC8655-70	ECUM1E104ZFN	E.CAPACITOR 25V 0.1U	16	
PC8701-15	ECUM1E104ZFN	E.CAPACITOR 25V 0.1U	15	
PC8751-61	ECUM1E104ZFN	E.CAPACITOR 25V 0.1U	11	
PC8801-07	ECUM1E104ZFN	E.CAPACITOR 25V 0.1U	7	
PIN1-N3	VJR0423	PIN	3	
Q8601,02	2SD601-R	TRANSISTOR	2	
		RESISTORS		
R2	ERJ6GEY0R00	M.RESISTOR CH 1/10W 0	1	
R8001-07	ERJ6GEYJ101	M.RESISTOR CH1/10W 100	7	
R8008,09	ERJ6GEYJ471	M.RESISTOR CH1/10W 470	2	
R8012,13	ERJ6GEYJ471	M.RESISTOR CH1/10W 470	2	
R8014-16	ERJ6GEYJ101	M.RESISTOR CH1/10W 100	3	
R8017,18	ERJ6GEYJ471	M.RESISTOR CH1/10W 470	2	
R8019-21	ERJ6GEY0R00	M.RESISTOR CH 1/10W 0	3	
R8024-29	ERJ6GEYJ101	M.RESISTOR CH1/10W 100	6	
R8030-41	ERJ6GEY0R00	M.RESISTOR CH 1/10W 0	12	
R8042,43	ERJ6GEYJ101	M.RESISTOR CH1/10W 100	2	

Ref.No.	Part No.	Part Name & Description	Pcs	Remarks
R8044	ERJ6GEY0R00	M.RESISTOR CH 1/10W 0	1	
R8051-58	ERJ6GEYJ103	M.RESISTOR CH1/10W 10K	8	
R8101-08	ERJ6GEYJ101	M.RESISTOR CH1/10W 100	8	
R8109	ERJ6GEYJ473	M.RESISTOR CH1/10W 47K	1	
R8111,12	ERJ6GEYJ101	M.RESISTOR CH1/10W 100	2	
R8113	ERJ6GEYJ103	M.RESISTOR CH1/10W 10K	1	
R8114	ERJ6GEYJ123	M.RESISTOR CH1/10W 12K	1	
R8115	ERJ6GEYJ103	M.RESISTOR CH1/10W 10K	1	
R8116	ERJ6GEYJ123	M.RESISTOR CH1/10W 12K	1	
R8117-33	ERJ6GEYJ471	M.RESISTOR CH1/10W 470	17	
R8134-37	ERJ6GEYJ101	M.RESISTOR CH1/10W 100	4	
R8138	ERJ6GEYJ334	M.RESISTOR CH1/10W 330K	1	
R8139,40	ER0S2CKG51R0	M.RESISTOR 1/4W 51.0	2	
R8151-58	ERJ6GEYJ103	M.RESISTOR CH1/10W 10K	8	
R8201	ERJ6GEYJ103	M.RESISTOR CH1/10W 10K	1	
R8251-53	ERJ6GEYJ103	M.RESISTOR CH1/10W 10K	3	
R8301-03	ERJ6GEYJ103	M.RESISTOR CH1/10W 10K	3	
R8351	ERJ6GEYJ103	M.RESISTOR CH1/10W 10K	1	
R8451	ERJ6GEYJ103	M.RESISTOR CH1/10W 10K	1	
R8501-33	ERJ6GEYJ391	M.RESISTOR CH1/10W 390	33	
R8534-39	ERJ6GEYJ560	M.RESISTOR CH1/10W 56	6	
R8540	ERJ6GEYJ103	M.RESISTOR CH1/10W 10K	1	
R8551	ERJ6GEYJ103	M.RESISTOR CH1/10W 10K	1	
R8602	ERJ6GEYJ152	M.RESISTOR CH1/10W 1.5K	1	
R8603	ERJ6GEYJ562	M.RESISTOR CH1/10W 5.6K	1	
R8604	ERJ6GEYJ102	M.RESISTOR CH1/10W 1K	1	
R8606	ERJ6GEYJ561	M.RESISTOR CH1/10W 560	1	
R8608	ERJ6GEYJ562	M.RESISTOR CH1/10W 5.6K	1	
R8609	ERJ6GEYJ152	M.RESISTOR CH1/10W 1.5K	1	
R8610	ERJ6GEYJ102	M.RESISTOR CH1/10W 1K	1	
R8612	ERJ6GEYJ561	M.RESISTOR CH1/10W 560	1	
R8614	ERJ6GEYJ562	M.RESISTOR CH1/10W 5.6K	1	
R8615	ERJ6GEYJ152	M.RESISTOR CH1/10W 1.5K	1	
R8616	ERJ6GEYJ102	M.RESISTOR CH1/10W 1K	1	
R8618,19	ERJ6GEYG153	M.RESISTOR CH1/10W 15K	2	
R8620-25	ERJ6GEYJ221	M.RESISTOR CH1/10W 220	6	
R8626-30	ERJ6GEYF472	M.RESISTOR CH1/10W 4.7K	5	
R8631-33	ERJ6GEYJ102	M.RESISTOR CH1/10W 1K	3	
R8634	ERJ6GEYJ101	M.RESISTOR CH1/10W 100	1	
R8651	ERJ6GEYJ152	M.RESISTOR CH1/10W 1.5K	1	
R8652	ERJ6GEYJ562	M.RESISTOR CH1/10W 5.6K	1	
R8653	ERJ6GEYJ102	M.RESISTOR CH1/10W 1K	1	
R8656	ERJ6GEYJ224	M.RESISTOR CH1/10W 220K	1	
R8657	ERJ6GEYJ152	M.RESISTOR CH1/10W 1.5K	1	
R8658	ERJ6GEYJ392	M.RESISTOR CH1/10W 3.9K	1	
R8659	ERJ6GEYJ102	M.RESISTOR CH1/10W 1K	1	
R8662,63	ERJ6GEYJ103	M.RESISTOR CH1/10W 10K	2	
R8664	ERJ6GEYJ824	M.RESISTOR CH1/10W 820K	1	
R8665	ERJ6GEYF472	M.RESISTOR CH1/10W 4.7K	1	
R8667	ERJ6GEY0R00	M.RESISTOR CH 1/10W 0	1	
R8668,69	ERJ6GEYJ101	M.RESISTOR CH1/10W 100	2	
R8701	ERJ6GEYJ152	M.RESISTOR CH1/10W 1.5K	1	
R8702	ERJ6GEYJ562	M.RESISTOR CH1/10W 5.6K	1	
R8703	ERJ6GEYJ102	M.RESISTOR CH1/10W 1K	1	
R8706	ERJ6GEYJ224	M.RESISTOR CH1/10W 220K	1	
R8707,08	ERJ6GEYJ103	M.RESISTOR CH1/10W 10K	2	
R8709	ERJ6GEYF472	M.RESISTOR CH1/10W 4.7K	1	
R8711	ERJ6GEY0R00	M.RESISTOR CH 1/10W 0	1	
R8712	ERJ6GEYJ101	M.RESISTOR CH1/10W 100	1	
R8758,59	ERJ6GEYF472	M.RESISTOR CH1/10W 4.7K	2	
R8801	ERJ6GEYJ152	M.RESISTOR CH1/10W 1.5K	1	
R8802	ERJ6GEYJ392	M.RESISTOR CH1/10W 3.9K	1	
R8803	ERJ6GEYJ102	M.RESISTOR CH1/10W 1K	1	
R8806,07	ERJ6GEYJ103	M.RESISTOR CH1/10W 10K	2	
R8809	ERJ6GEYJ101	M.RESISTOR CH1/10W 100	1	
RY8601,02	VSY2039	RELAY	2	
SW8051	VSS0184	SWITCH	1	
SW8151	VSS023708	SWITCH	1	

L3 VIDEO/AUDIO PB VEP88070D

Ref.No.	Part No.	Part Name & Description	Pcs	Remarks
TP8154-56	VJR0646	TEST POINT	3	
TP8159-62	VJR0646	TEST POINT	4	
TP8201-07	VJR0646	TEST POINT	7	
TP8251,52	VJR0646	TEST POINT	2	
TP8301,02	VJR0646	TEST POINT	2	
TP8351-61	VJR0646	TEST POINT	11	
TP8601-09	VJR0646	TEST POINT	9	
TP8651-54	VJR0646	TEST POINT	4	
TP8701,02	VJR0646	TEST POINT	2	
TP8751-64	VJR0646	TEST POINT	14	
TP8801,02	VJR0646	TEST POINT	2	
TPG8001-05	VJR0646	TEST POINT	5	
VR8601-03	VRV0109B102	V.RESISTOR 1K	3	
		MISCELLANEOUS		
	VGQ0291	P.C.BOARD NAME PLATE	1	
	VML2143	CARD PULLER	1	
	VML2144	CARD PULLER	1	
	VMP3048	P.C.BOARD HOLDER ANGLE	2	
	VSC3336	SHIELD CASE	1	
	VSC3337	SHIELD CASE	1	
	VSC3338	SHIELD CASE	1	
	VSC3339	SHIELD CASE	1	
	VXA4418	P.C.BOARD SHIELD PLATE	1	
	XNG26E	NUT	4	
	XTV3+6FFR	SCREW	9	
	XYN26+C12	SCREW	4	
	VEP88070D	P.C.BOARD W/COMPONENT		
		L3 VIDEO/AUDIO PB		
		CAPACITORS		
C8001-03	ECA1CXLV101	E.CAPACITOR 16V 100U	3	
C8004-39	ECUM1H104ZFN	C.CAPACITOR CH 50V 0.1U	46	
CP9	VJP1242T	CONNECTOR (MALE)	1	
D8001,02	SN74S1051NS	DIODE	2	
DL8001-03	ADM50ND	IC	3	
IC8001	74F74SJ	IC	1	
IC8002,03	MC10116L	IC	2	
IC8004,05	MC10115L	IC	2	
IC8006	SN74LS541NS	IC	1	
IC8007	MC74HC573AF	IC	1	
IC8012	MC74HC541AF	IC	1	
IC8013	SN74ALS574B	IC	1	
IC8014	MC10104L	IC	1	
IC8015	MC10124L	IC	1	

Ref.No.	Part No.	Part Name & Description	Pcs	Remarks
IC8016	VSI0857C	IC	1	
IC8017	PC74HCT574	IC	1	
IC8018,19	MB81464-12	IC	2	
IC8020-22	SN74LS541NS	IC	3	
IC8023,24	MB121M246	IC	2	
IC8025	MC10125L	IC	1	
IC8027	UPD71055GB	IC	1	
IC8029	MC74HC541AF	IC	1	
IC8030	MC74HC595AF	IC	1	
IC8031	74F574SJ	IC	1	
IC8032	VSI0918A	IC	1	
IC8033	VSI0919A	IC	1	
IC8034	VSI0920A	IC	1	
IC8035	VSI0921B	IC	1	
IC8036	MC74HC574AF	IC	1	
IC8037	VSI0846	IC	1	
IC8039	MC74HC541AF	IC	1	
IC8040	MC74HC595AF	IC	1	
IC8041	74F574SJ	IC	1	
IC8042	74F241SJ	IC	1	
IC8043	MC74HC574AF	IC	1	
IC8044	SN74AS244NS	IC	1	
IC8045	MC74HC574AF	IC	1	
IC8046	SN74AS244NS	IC	1	
IC8047	UPD71055GB	IC	1	
IC8048,49	SN74LS541NS	IC	2	
IC8050	MC74HC240AF	IC	1	
IC8051	SN74LS541NS	IC	1	
IC8052	PC74HCT541T	IC	1	
IC8053	MC74HC541AF	IC	1	
IC8054	MC74HC574AF	IC	1	
IC8055	VSI0871	IC	1	
IC8056	VSI0870	IC	1	
IC8057	VSI0872	IC	1	
IC8058	VSI0871	IC	1	
IC8059	VSI0870	IC	1	
IC8060	UPD71055GB	IC	1	
IC8061	MC74HC574AF	IC	1	
IC8062	VSI0856A	IC	1	
IC8063	MC74HC574AF	IC	1	
IC8064	SN74LS541NS	IC	1	
IC8065	74F541SJ	IC	1	
IC8066,67	MC74HC541AF	IC	2	
IC8068	VSI0872	IC	1	
IC8069,70	MC74HC125AF	IC	2	
IC8071	74F11SJ	IC	1	
IC8072	PC74HCT541T	IC	1	
IC8073	MC74HC541AF	IC	1	
IC8074,75	L7A0544	IC	2	
IC8076	VSI0858E	IC	1	
IC8077	VSI0931D	IC	1	
IC8078	MC74HC04AF	IC	1	
IC8079	MC74HC32AF	IC	1	
IC8080	SN74LS541NS	IC	1	
IC8081	MB8289-25PF	IC	1	
IC8082	IDTFCT823BSO	IC	1	
IC8083	VSI0848	IC	1	
IC8084	IDTFCT823BSO	IC	1	
IC8085,86	SN74ALS574B	IC	2	
IC8087	MC74HC541AF	IC	1	
IC8088	UPD42101G-3	IC	1	
IC8089	VSI0848	IC	1	
IC8090	VSI0853B	IC	1	
IC8091	L7A0782	IC	1	
IC8092	MB81C79A35PF	IC	1	
IC8093	MB8289-25PF	IC	1	
IC8094	VSI0858E	IC	1	
IC8095,96	L7A0343	IC	2	
IC8097	MB8289-25PF	IC	1	
IC8098,99	MC74HC541AF	IC	2	
IC8100	MC10125L	IC	1	
IC8101	MC74HC125AF	IC	1	
IC8102	PC74HCT541T	IC	1	
IC8103	74ACT240SJ	IC	1	
IC8104	CY7C197-35PC	IC	1	

Ref.No.	Part No.	Part Name & Description	Pcs	Remarks
IC8105	VSI0853B	IC	1	
IC8106	CY7C197-35PC	IC	1	
IC8107	MB81C79A35PF	IC	1	
IC8108,09	IDTFCT823BSO	IC	2	
IC8110	MC74HC04AF	IC	1	
IC8111	SN74LS541NS	IC	1	
IC8112	L7A0343	IC	1	
IC8113,14	MC74HC125AF	IC	2	
IC8115	MC74HC541AF	IC	1	
IC8116	SN74AS32NS	IC	1	
IC8117	SN74AS153N	IC	1	
IC8118	MC74HC244AF	IC	1	
IC8119	MC74HC125AF	IC	1	
IC8120-22	MC74HC541AF	IC	3	
IC8123	MB81C79A35PF	IC	1	
IC8124	SN74AS244NS	IC	1	
IC8125	VSI0860C	IC	1	
IC8126	VSI0854	IC	1	
IC8127	VSI0850B	IC	1	
IC8128	VSI0864B	IC	1	
IC8129	VSI0866B	IC	1	
IC8130	VSI0862B	IC	1	
IC8131	VSI0849B	IC	1	
IC8132	VSI0874	IC	1	
IC8133	MC74HC541AF	IC	1	
IC8134	VSI0876A	IC	1	
IC8135	MC74HC244AF	IC	1	
IC8136	D65180GD031	IC	1	
IC8137	IDTFCT823BSO	IC	1	
IC8138	74F399SJ	IC	1	
IC8140	SN74AS04NS	IC	1	
IC8141	SN74AS32NS	IC	1	
IC8142	MC74HC541AF	IC	1	
IC8143	SN74AS04NS	IC	1	
IC8144,45	IDTFCT823BSO	IC	2	
IC8146	D65180GD031	IC	1	
IC8147	CY7C197-35PC	IC	1	
IC8148	MC74HC244AF	IC	1	
IC8149	K6810ALG7L	IC	1	
IC8150	IDTFCT823BSO	IC	1	
IC8151	MC74HC574AF	IC	1	
IC8152	MC74HC541AF	IC	1	
IC8153	IDTFCT823BSO	IC	1	
IC8154	K6256BLG7L	IC	1	
IC8155	IDTFCT823BSO	IC	1	
IC8156	MC74HC574AF	IC	1	
IC8157,58	CY7C197-35PC	IC	2	
IC8159	MC74HC541AF	IC	1	
IC8160	VSI0847	IC	1	
IC8161	CY7C197-35PC	IC	1	
IC8162	VSI0855A	IC	1	
IC8163,64	IDTFCT823BSO	IC	2	
IC8165	MB81C79A35PF	IC	1	
IC8166	CY7C197-35PC	IC	1	
IC8167	K6256BLG7L	IC	1	
IC8168	K6810ALG7L	IC	1	
IC8169	MC74HC00AF	IC	1	
IC8170	MC74HC574AF	IC	1	
IC8171-73	K6810ALG7L	IC	3	
IC8174	VSI0851	IC	1	
IC8175	74F399SJ	IC	1	
IC8176	SN74AS244NS	IC	1	
IC8177	MC74HC574AF	IC	1	
IC8178	VSI0855A	IC	1	
IC8179	CY7C197-35PC	IC	1	
IC8180	K6256BLG7L	IC	1	
IC8181	K6810ALG7L	IC	1	
IC8182	IDTFCT823BSO	IC	1	
IC8183	MC74HC574AF	IC	1	
IC8184	MC74HC175F	IC	1	
IC8185	MC74HC74AF	IC	1	
IC8186	SN74ALS574B	IC	1	
IC8187	MC74HC574AF	IC	1	
IC8188	MC74HC541AF	IC	1	
IC8189	VSI0851	IC	1	

Ref.No.	Part No.	Part Name & Description	Pcs	Remarks
IC8190-92	K6256BLG7L	IC	3	
IC8193	MC74HC574AF	IC	1	
IC8194	SN74LS541NS	IC	1	
IC8195	L7A0343	IC	1	
IC8196	MC74HC574AF	IC	1	
IC8197	MC74HC541AF	IC	1	
IC8198-00	IDTFCT823BSO	IC	3	
IC8201	74FCT574ASC	IC	1	
IC8202,03	MC74HC541AF	IC	2	
IC8204	L7A0343	IC	1	
IC8205	74FCT574ASC	IC	1	
IC8206-08	MC74HC574AF	IC	3	
IC8209	MC74HC00AF	IC	1	
IC8210	MC74HC574AF	IC	1	
IC8211	MC74HC175F	IC	1	
IC8212	UPD42101G-3	IC	1	
IC8213	SN74LS541NS	IC	1	
IC8214	UPD42101G-3	IC	1	
IC8215	SN74LS541NS	IC	1	
IC8216,17	UPD42101G-3	IC	2	
IC8218	IDTFCT823BSO	IC	1	
IC8219	MC74HC541AF	IC	1	
IC8220,21	UPD42101G-3	IC	2	
IC8222	IDTFCT823BSO	IC	1	
IC8223	SN74LS245NS	IC	1	
IC8224,25	MC74HC541AF	IC	2	
IC8226	SN74AS32NS	IC	1	
IC8227	MC74HC541AF	IC	1	
IC8228	MB81C79A35PF	IC	1	
IC8229	MC74HC541AF	IC	1	
IC8230	MC74HC574AF	IC	1	
IC8231	SN74ALS574B	IC	1	
IC8232	UPD42101G-3	IC	1	
IC8233	VSI0876A	IC	1	
ICS8055-59	VJS2726	CONNECTOR (FEMALE)	5	
ICS8068	VJS2726	CONNECTOR (FEMALE)	1	
ICS8077	VJS3096328	CONNECTOR (FEMALE)	1	
JP8001-11	VJP1940	CONNECTOR (MALE)	11	
JS8001-11	VJS1940	CONNECTOR (FEMALE)	11	
L8001-03	VLF0931	FILTER	3	
LED8001-04	LN25RP	DIODE	4	
P8005,06	VJP3151	CONNECTOR (MALE)	2	
		RESISTORS		
R8001,02	ERJ6GEYJ391	M.RESISTOR CH1/10W 390	2	
R8003	ERJ6GEYJ101	M.RESISTOR CH1/10W 100	1	
R8004-07	ERJ6GEYJ471	M.RESISTOR CH1/10W 470	4	
R8008	ERJ6GEYJ101	M.RESISTOR CH1/10W 100	1	
R8009,10	ERJ6GEYJ471	M.RESISTOR CH1/10W 470	2	
R8011,12	ERJ6GEYJ391	M.RESISTOR CH1/10W 390	2	
R8013	ERJ6GEYJ101	M.RESISTOR CH1/10W 100	1	
R8014,15	ERJ6GEYJ471	M.RESISTOR CH1/10W 470	2	
R8016	ERJ6GEYJ101	M.RESISTOR CH1/10W 100	1	
R8017,18	ERJ6GEYJ471	M.RESISTOR CH1/10W 470	2	
R8019-21	ERJ6GEYJ101	M.RESISTOR CH1/10W 100	3	
R8022	ERJ6GEYJ471	M.RESISTOR CH1/10W 470	1	
R8023,24	ERJ6GEYJ101	M.RESISTOR CH1/10W 100	2	
R8025-27	ERJ6GEYJ471	M.RESISTOR CH1/10W 470	3	

L4 VIDEO PROCESS VEP88071F
L4 SUB VEP88090A

Ref.No.	Part No.	Part Name & Description	Pcs	Remarks
R8028,29	ERJ6GEYJ101	M.RESISTOR CH1/10W 100	2	
R8030	ERJ6GEYJ471	M.RESISTOR CH1/10W 470	1	
R8031-38	ERJ6GEY0R00	M.RESISTOR CH 1/10W 0	8	
R8039-51	ERJ6GEYJ471	M.RESISTOR CH1/10W 470	13	
R8060-63	ERJ6GEY0R00	M.RESISTOR CH 1/10W 0	4	
R8068	ERJ6GEYJ101	M.RESISTOR CH1/10W 100	1	
R8069-77	ERJ6GEYJ103	M.RESISTOR CH1/10W 10K	9	
R8078-80	ERJ6GEYF472	M.RESISTOR CH1/10W 4.7K	3	
R8081-62	ERJ6GEYJ103	M.RESISTOR CH1/10W 10K	82	
R8163-66	ERJ6GEYJ561	M.RESISTOR CH1/10W 560	4	
R8167-71	ERJ6GEYJ103	M.RESISTOR CH1/10W 10K	5	
R8172	ERJ6GEY0R00	M.RESISTOR CH 1/10W 0	1	
R8173-15	ERJ6GEYJ103	M.RESISTOR CH1/10W 10K	43	
R8216	ERJ6GEYF472	M.RESISTOR CH1/10W 4.7K	1	
SW8001-04	VSS0207	SWITCH	4	
TP8001-68	VJR0646	TEST POINT	68	
TPG8001-09	VJR0646	TEST POINT	9	
		MISCELLANEOUS		
	VGQ0291	P.C.BOARD NAME PLATE	1	
	VJS1435	CONNECTOR (FEMALE)	4	
	VML2143	CARD PULLER	1	
	VML2144	CARD PULLER	1	
	VMP3048	P.C.BOARD HOLDER ANGLE	2	
	VXA4418	P.C.BOARD SHIELD PLATE	1	
	XNG26E	NUT	4	
	XTV3+6FFR	SCREW	9	
	XYN26+C12	SCREW	4	
	VEP88071F	P.C.BOARD W/COMPONENT		
		L4 VIDEO PROCESS		
	VEP88090A	P.C.BOARD W/COMPONENT		FOR VEP88071F
		L4 SUB		
		CAPACITORS		
C8001,02	ECA1CXS470	E.CAPACITOR 16V 47U	2	
C8003-05	ECA1AXS680	E.CAPACITOR 10V 68U	3	
C8006-10	ECUM1H103ZFN	C.CAPACITOR CH 50V 0.01U	5	
C8011-14	ECA1CXS470	E.CAPACITOR 16V 47U	4	
C8015,16	ECUM1H103ZFN	C.CAPACITOR CH 50V 0.01U	2	
C8017	ECA1CXS470	E.CAPACITOR 16V 47U	1	
C8018	ECUM1H103ZFN	C.CAPACITOR CH 50V 0.01U	1	
C8019	ECA1CXS470	E.CAPACITOR 16V 47U	1	
C8020	ECUM1H103ZFN	C.CAPACITOR CH 50V 0.01U	1	
C8021,22	ECUM1H103KBN	C.CAPACITOR CH 50V 0.01U	2	
C8023	ECUM1H820JCN	C.CAPACITOR CH 50V 82P	1	
C8024	ECUM1H103ZFN	C.CAPACITOR CH 50V 0.01U	1	
C8025	ECA1CXS470	E.CAPACITOR 16V 47U	1	
C8026	ECQB1H104JF	P.CAPACITOR 50V 0.1U	1	
C8027	ECUM1H330JCN	C.CAPACITOR CH 50V 33P	1	
C8028	ECUM1H180JCN	C.CAPACITOR CH 50V 18P	1	
C8029	ECUM1H680JCN	C.CAPACITOR CH 50V 68P	1	
C8030,31	ECQB1H104JF	P.CAPACITOR 50V 0.1U	2	
C8032	ECA1HXNV010	E.CAPACITOR 50V 1U	1	
C8033	ECUM1H103ZFN	C.CAPACITOR CH 50V 0.01U	1	
C8034	ECA1CXS470	E.CAPACITOR 16V 47U	1	
C8035	ECUM1H103ZFN	C.CAPACITOR CH 50V 0.01U	1	
C8036	ECA1VXS220	E.CAPACITOR 35V 22U	1	
C8037	ECUM1H121JCN	C.CAPACITOR CH 50V 120P	1	

Ref.No.	Part No.	Part Name & Description	Pcs	Remarks
C8038	ECUM1H560JCN	C.CAPACITOR CH 50V 56P	1	
C8039	ECUM1H151JCN	C.CAPACITOR CH 50V 150P	1	
C8040	ECUM1H101JCN	C.CAPACITOR CH 50V 100P	1	
C8041	ECUM1H102JCN	C.CAPACITOR CH 50V 1000P	1	
C8042	ECUM1H150JCN	C.CAPACITOR CH 50V 15P	1	
C8043-45	ECUM1H103ZFN	C.CAPACITOR CH 50V 0.01U	3	
C8046	ECUM1H122JN	C.CAPACITOR CH 50V 1200P	1	
C8047-52	ECUM1H103ZFN	C.CAPACITOR CH 50V 0.01U	6	
C8053	ECQB1H104JF	P.CAPACITOR 50V 0.1U	1	
C8054,55	ECUM1H103ZFN	C.CAPACITOR CH 50V 0.01U	2	
C8056	ECUM1H102JCN	C.CAPACITOR CH 50V 1000P	1	
C8057-59	ECUM1H103ZFN	C.CAPACITOR CH 50V 0.01U	3	
C8060	ECUM1H221JCN	C.CAPACITOR CH 50V 220P	1	
C8061	ECQB1H104JF	P.CAPACITOR 50V 0.1U	1	
C8062,63	ECUM1H103ZFN	C.CAPACITOR CH 50V 0.01U	2	
C8064	ECUM1H102JCN	C.CAPACITOR CH 50V 1000P	1	
C8065	ECUM1H150JCN	C.CAPACITOR CH 50V 15P	1	
C8066,67	ECUM1H103ZFN	C.CAPACITOR CH 50V 0.01U	2	
C8068	ECA1HXSR47	E.CAPACITOR 50V 0.47U	1	
C8069-71	ECUM1H103ZFN	C.CAPACITOR CH 50V 0.01U	3	
C8073	ECA1CXS470	E.CAPACITOR 16V 47U	1	
C8074-77	ECUM1H103ZFN	C.CAPACITOR CH 50V 0.01U	4	
C8078	ECUM1H390JCN	C.CAPACITOR CH 50V 39P	1	
C8079-82	ECUM1H103ZFN	C.CAPACITOR CH 50V 0.01U	4	
C8083	ECUM1H820JCN	C.CAPACITOR CH 50V 82P	1	
C8084,85	ECUM1H103ZFN	C.CAPACITOR CH 50V 0.01U	2	
C8086	ECA1CXS100	E.CAPACITOR 16V 10U	1	
C8087	ECUM1H103ZFN	C.CAPACITOR CH 50V 0.01U	1	
C8088	ECUM1H103KBN	C.CAPACITOR CH 50V 0.01U	1	
C8089	ECA1HXNV2R2	E.CAPACITOR 50V 2.2U	1	
C8090,91	ECUM1H103ZFN	C.CAPACITOR CH 50V 0.01U	2	
C8092	ECA1CXS470	E.CAPACITOR 16V 47U	1	
C8093	ECUM1H103ZFN	C.CAPACITOR CH 50V 0.01U	1	
C8094	ECQB1H103JF	P.CAPACITOR 50V 0.01U	1	
C8095	ECV1ZW20X53T	E.CAPACITOR 50V 20P	1	
C8096	ECUM1H102JCN	C.CAPACITOR CH 50V 1000P	1	
C8097,98	ECUM1H220JCN	C.CAPACITOR CH 50V 22P	2	
C8099	ECUM1H103KBN	C.CAPACITOR CH 50V 0.01U	1	
C8100-03	ECA1CXS470	E.CAPACITOR 16V 47U	4	
C8103	VLQEL05S470J	COIL 47UH	1	
C8104	ECA1CXS470	E.CAPACITOR 16V 47U	1	
C8105-08	ECUM1H103ZFN	C.CAPACITOR CH 50V 0.01U	4	
C8109	ECQB1H683JF	P.CAPACITOR 50V 0.068U	1	
C8110,11	ECUM1H820JCN	C.CAPACITOR CH 50V 82P	2	
C8112-16	ECUM1H103ZFN	C.CAPACITOR CH 50V 0.01U	5	
C8117	ECUM1H121JCN	C.CAPACITOR CH 50V 120P	1	
C8118	ECUM1H820JCN	C.CAPACITOR CH 50V 82P	1	
C8119	ECUM1H221JCN	C.CAPACITOR CH 50V 220P	1	
C8120	ECUM1H103KBN	C.CAPACITOR CH 50V 0.01U	1	
C8121	ECA1CXNV100	E.CAPACITOR 16V 10U	1	
C8122	ECUM1H102JCN	C.CAPACITOR CH 50V 1000P	1	
C8123	ECUM1H103ZFN	C.CAPACITOR CH 50V 0.01U	1	
C8124	ECUM1H102JCN	C.CAPACITOR CH 50V 1000P	1	
C8125	ECUM1H103KBN	C.CAPACITOR CH 50V 0.01U	1	
C8126-28	ECUM1H103ZFN	C.CAPACITOR CH 50V 0.01U	3	
C8129	ECA1VXNV4R7	E.CAPACITOR 35V 4.7U	1	
C8130-35	ECUM1H103ZFN	C.CAPACITOR CH 50V 0.01U	6	
C8136,37	ECUM1H103KBN	C.CAPACITOR CH 50V 0.01U	2	
C8138,39	ECUM1H103ZFN	C.CAPACITOR CH 50V 0.01U	2	
C8140-42	ECUM1E104ZFN	E.CAPACITOR 25V 0.1U	3	
C8143	ECUM1H223KBN	C.CAPACITOR CH 50V 0.022U	1	
C8145,46	ECA1HXS2R2	E.CAPACITOR 50V 2.2U	2	
C8147-49	ECUM1H103ZFN	C.CAPACITOR CH 50V 0.01U	3	
C8150,51	ECUM1H470JCN	C.CAPACITOR CH 50V 47P	2	
C8152	ECUM1H070DCN	C.CAPACITOR CH 50V 7P	1	
C8153	ECUM1H680JCN	C.CAPACITOR CH 50V 68P	1	
C8154-57	ECUM1H103ZFN	C.CAPACITOR CH 50V 0.01U	4	
C8158-63	ECUM1E104ZFN	E.CAPACITOR 25V 0.1U	6	
C8164,65	ECUM1H103ZFN	C.CAPACITOR CH 50V 0.01U	2	
C8166	ECUM1E104ZFN	E.CAPACITOR 25V 0.1U	1	
C8167	ECUM1H103ZFN	C.CAPACITOR CH 50V 0.01U	1	
C8169	ECUM1H103ZFN	C.CAPACITOR CH 50V 0.01U	1	
C8170	ECA1HXNV010	E.CAPACITOR 50V 1U	1	
C8171	ECUM1H103ZFN	C.CAPACITOR CH 50V 0.01U	1	
C8172	ECUM1E104ZFN	E.CAPACITOR 25V 0.1U	1	

Ref.No.	Part No.	Part Name & Description	Pcs	Remarks
C8180,81	ECA1CXS470	E.CAPACITOR 16V 47U	2	
C8182	ECUM1H103ZFN	C.CAPACITOR CH 50V 0.01U	1	
C8183	ECQB1H104JF	P.CAPACITOR 50V 0.1U	1	
C8184	ECUM1H472KBN	C.CAPACITOR CH 50V 4700P	1	
C8185-89	ECUM1H103ZFN	C.CAPACITOR CH 50V 0.01U	5	
C8190	ECUM1H103KBN	C.CAPACITOR CH 50V 0.01U	1	
C8191	ECUM1H103ZFN	C.CAPACITOR CH 50V 0.01U	1	
C8200	ECUM1H103ZFN	C.CAPACITOR CH 50V 0.01U	1	
C8201	ECA1CXS470	E.CAPACITOR 16V 47U	1	
C8202	ECUM1H103ZFN	C.CAPACITOR CH 50V 0.01U	1	
C8203	ECA1CXS470	E.CAPACITOR 16V 47U	1	
C8204	ECUM1H103ZFN	C.CAPACITOR CH 50V 0.01U	1	
C8205	ECA1CXS470	E.CAPACITOR 16V 47U	1	
C8206	ECUM1H330JCN	C.CAPACITOR CH 50V 33P	1	
C8207	ECUM1H181JCN	C.CAPACITOR CH 50V 180P	1	
C8208	ECUM1H103ZFN	C.CAPACITOR CH 50V 0.01U	1	
C8209	ECUM1H151JCN	C.CAPACITOR CH 50V 150P	1	
C8210	ECUM1H471JCN	C.CAPACITOR CH 50V 470P	1	
C8210	VLQEL05S470J	COIL 47UH	1	
C8211,12	ECUM1H103ZFN	C.CAPACITOR CH 50V 0.01U	2	
C8213,14	ECUM1H330JCN	C.CAPACITOR CH 50V 33P	2	
C8215,16	ECUM1H103ZFN	C.CAPACITOR CH 50V 0.01U	2	
C8217,18	ECUM1H103KBN	C.CAPACITOR CH 50V 0.01U	2	
C8219	ECUM1H150JCN	C.CAPACITOR CH 50V 15P	1	
C8220	ECUM1H121JCN	C.CAPACITOR CH 50V 120P	1	
C8221	ECUM1H103ZFN	C.CAPACITOR CH 50V 0.01U	1	
C8222	ECUM1H470JCN	C.CAPACITOR CH 50V 47P	1	
C8223	ECUM1H101JCN	C.CAPACITOR CH 50V 100P	1	
C8224	ECUM1H103ZFN	C.CAPACITOR CH 50V 0.01U	1	
C8225	ECUM1H330JCN	C.CAPACITOR CH 50V 33P	1	
C8226	ECUM1H103ZFN	C.CAPACITOR CH 50V 0.01U	1	
C8227	ECUM1H822KBN	C.CAPACITOR CH 50V 8200P	1	
C8228	ECUM1H181JCN	C.CAPACITOR CH 50V 180P	1	
C8229	ECA1CXS470	E.CAPACITOR 16V 47U	1	
C8230-32	ECUM1H103ZFN	C.CAPACITOR CH 50V 0.01U	3	
C8233	ECUM1H103KBN	C.CAPACITOR CH 50V 0.01U	1	
C8234,35	ECA1HXNV010	E.CAPACITOR 50V 1U	2	
C8236	ECQB1H224JF	P.CAPACITOR 50V 0.22U	1	
C8237	ECUM1H471JCN	C.CAPACITOR CH 50V 470P	1	
C8238,39	ECUM1H103ZFN	C.CAPACITOR CH 50V 0.01U	2	
C8240	ECUM1H102JCN	C.CAPACITOR CH 50V 1000P	1	
C8241-43	ECUM1H103ZFN	C.CAPACITOR CH 50V 0.01U	3	
C8244	ECUM1H680JCN	C.CAPACITOR CH 50V 68P	1	
C8245	ECUM1H822KBN	C.CAPACITOR CH 50V 8200P	1	
C8246	ECA1CXS470	E.CAPACITOR 16V 47U	1	
C8247	ECUM1H151JCN	C.CAPACITOR CH 50V 150P	1	
C8248	ECUM1H103ZFN	C.CAPACITOR CH 50V 0.01U	1	
C8249	ECUM1H103KBN	C.CAPACITOR CH 50V 0.01U	1	
C8250,51	ECA1HXNV010	E.CAPACITOR 50V 1U	2	
C8252	ECA1HXNV2R2	E.CAPACITOR 50V 2.2U	1	
C8253	ECUM1H471JCN	C.CAPACITOR CH 50V 470P	1	
C8254-57	ECUM1H103ZFN	C.CAPACITOR CH 50V 0.01U	4	
C8258	ECA1CXS470	E.CAPACITOR 16V 47U	1	
C8259	ECUM1H103ZFN	C.CAPACITOR CH 50V 0.01U	1	
C8260	ECA1CXS470	E.CAPACITOR 16V 47U	1	
C8261	ECUM1H103ZFN	C.CAPACITOR CH 50V 0.01U	1	
C8270,71	ECA1CXS470	E.CAPACITOR 16V 47U	2	
C8300-09	ECUM1H103ZFN	C.CAPACITOR CH 50V 0.01U	10	
C8310	ECA1VXS220	E.CAPACITOR 35V 22U	1	
C8311-24	ECUM1H103ZFN	C.CAPACITOR CH 50V 0.01U	14	
C8326	ECUM1H103ZFN	C.CAPACITOR CH 50V 0.01U	1	
C8329-39	ECUM1H103ZFN	C.CAPACITOR CH 50V 0.01U	11	
C8400-06	ECUM1H103ZFN	C.CAPACITOR CH 50V 0.01U	7	
C8407	ECA1HXS010	E.CAPACITOR 50V 1U	1	
C8408	ECUM1E104ZFN	E.CAPACITOR 25V 0.1U	1	
C8409-12	ECUM1H103ZFN	C.CAPACITOR CH 50V 0.01U	4	
C8413-16	ECUM1H330JCN	C.CAPACITOR CH 50V 33P	4	
C8417	ECUM1E104ZFN	E.CAPACITOR 25V 0.1U	1	
C8418-22	ECUM1H103ZFN	C.CAPACITOR CH 50V 0.01U	5	
C8423	ECUM1E104ZFN	E.CAPACITOR 25V 0.1U	1	
C8424	ECUM1H103ZFN	C.CAPACITOR CH 50V 0.01U	1	
C8430-32	ECUM1H103ZFN	C.CAPACITOR CH 50V 0.01U	3	
C8501-12	ECUM1H103ZFN	C.CAPACITOR CH 50V 0.01U	12	
C8514-24	ECUM1H103ZFN	C.CAPACITOR CH 50V 0.01U	11	
C8527,28	ECUM1H103ZFN	C.CAPACITOR CH 50V 0.01U	2	

Ref.No.	Part No.	Part Name & Description	Pcs	Remarks
C8531-38	ECUM1H103ZFN	C.CAPACITOR CH 50V 0.01U	8	
C8540-42	ECUM1H103ZFN	C.CAPACITOR CH 50V 0.01U	3	
C8544-57	ECUM1H103ZFN	C.CAPACITOR CH 50V 0.01U	14	
C8560-64	ECUM1H103ZFN	C.CAPACITOR CH 50V 0.01U	5	
C8566	ECUM1H103ZFN	C.CAPACITOR CH 50V 0.01U	1	
C8600-02	ECUM1H103ZFN	C.CAPACITOR CH 50V 0.01U	3	
C8604-30	ECUM1H103ZFN	C.CAPACITOR CH 50V 0.01U	27	
C8632-38	ECUM1H103ZFN	C.CAPACITOR CH 50V 0.01U	7	
C8642,43	ECUM1H103ZFN	C.CAPACITOR CH 50V 0.01U	2	
C8700-05	ECUM1H103ZFN	C.CAPACITOR CH 50V 0.01U	6	
C8710-15	ECUM1H103ZFN	C.CAPACITOR CH 50V 0.01U	6	
C8718,19	ECUM1H103ZFN	C.CAPACITOR CH 50V 0.01U	2	
C8800-05	ECUM1E104ZFN	E.CAPACITOR 25V 0.1U	6	
C8809-11	ECUM1H103ZFN	C.CAPACITOR CH 50V 0.01U	3	
C8851-58	ECUM1H103ZFN	C.CAPACITOR CH 50V 0.01U	8	
C8860,61	ECUM1H103ZFN	C.CAPACITOR CH 50V 0.01U	2	
C8900-08	ECUM1H103ZFN	C.CAPACITOR CH 50V 0.01U	9	
C8910-17	ECUM1H103ZFN	C.CAPACITOR CH 50V 0.01U	8	
C8984-86	ECUM1H103ZFN	C.CAPACITOR CH 50V 0.01U	3	
C8993-97	ECUM1H103ZFN	C.CAPACITOR CH 50V 0.01U	5	
CN8001	VJP2509	CONNECTOR (MALE)	1	
CN8001	VJS2509	CONNECTOR (FEMALE)	1	
CN8002	VJP2509	CONNECTOR (MALE)	1	
CN8002	VJS2509	CONNECTOR (FEMALE)	1	
D8001	1SS101	DIODE	1	
D8002	MA151K	DIODE	1	
D8003	MA335-R	DIODE	1	
D8005	MA151WK	DIODE	1	
D8100	MA153A	DIODE	1	
D8101	MA151WA	DIODE	1	
D8102-04	MA151K	DIODE	3	
D8200,01	MA3051	DIODE	2	
D8202	MA153A	DIODE	1	
D8203	MA3051	DIODE	1	
D8204	MA151K	DIODE	1	
D8205,06	MA3051	DIODE	2	
D8207	MA153A	DIODE	1	
D8208	MA3051	DIODE	1	
D8209	MA3110L	DIODE	1	
D8210	MA3024	DIODE	1	
D8211	MA3068	DIODE	1	
D8800	LN25RP	DIODE	1	
DL8001	ADM5OND	IC	1	
IC8001	AN78L09	IC	1	
IC8002	AN91A12S	IC	1	
IC8003	NE521D	IC	1	
IC8004	UPC78N05H	IC	1	
IC8005	MC14538BF	IC	1	
IC8006-08	SN74LS221NS	IC	3	
IC8009	UPD65022F210	IC	1	
IC8010	MC74HC574AF	IC	1	
IC8011	UPC624C	IC	1	
IC8012	NJM4558M	IC	1	
IC8013	NJM360M	IC	1	
IC8014	SN74LS05NS	IC	1	
IC8015	MC74HC04AF	IC	1	
IC8016	MC74HC125AF	IC	1	
IC8017	SN74LS221NS	IC	1	
IC8018	MC74HC157AF	IC	1	
IC8019	NE521D	IC	1	
IC8021	74AC74SJ	IC	1	
IC8022	74AC86SJ	IC	1	
IC8023	74AC02SJ	IC	1	

Ref.No.	Part No.	Part Name & Description	Pcs	Remarks
IC8024	74AC74SJ	IC	1	
IC8025	74AC157SJ	IC	1	
IC8026	MC74HC4053F	IC	1	
IC8027	NJM082BM	IC	1	
IC8028	AN78L09	IC	1	
IC8030	VSI0949D	IC	1	
IC8031	AN79L05	IC	1	
IC8032	SN74LS123NS	IC	1	
IC8033	MN53015VZW	IC	1	
IC8034	SN74LS221NS	IC	1	
IC8100	AN78L05	IC	1	
IC8101	SN74LS123NS	IC	1	
IC8102	SN74LS221NS	IC	1	
IC8103	SN74LS123NS	IC	1	
IC8104	SN74LS05NS	IC	1	
IC8105	SN74AS109NS	IC	1	
IC8106	MC74HC109F	IC	1	
IC8107	MC74HC00AF	IC	1	
IC8108	SN74AS109NS	IC	1	
IC8109	MC74HC163AF	IC	1	
IC8110,11	MC74HC164F	IC	2	
IC8112	MC74HC86F	IC	1	
IC8113	MC74HC20F	IC	1	
IC8114	MC74HC32AF	IC	1	
IC8115	MC74HC574AF	IC	1	
IC8116	MC14538BF	IC	1	
IC8117,18	MC74HC04AF	IC	2	
IC8119	74F112SJ	IC	1	
IC8120	MC74HC74AF	IC	1	
IC8121,22	MC74HC574AF	IC	2	
IC8123	NJM084M	IC	1	
IC8124,25	NJM311M	IC	2	
IC8126	NJM084M	IC	1	
IC8127	MB40576P	IC	1	
IC8128	DAC10-GX	IC	1	
IC8129	NJM084M	IC	1	
IC8130	AN78L05	IC	1	
IC8200	AN78L05	IC	1	
IC8201	AN79L05	IC	1	
IC8202	SN74LS221NS	IC	1	
IC8203	NJM1496M	IC	1	
IC8204	MC74HC4053F	IC	1	
IC8205,06	NJM084M	IC	2	
IC8207	SN74LS221NS	IC	1	
IC8208	SN74LS05NS	IC	1	
IC8209	AN79L09	IC	1	
IC8210	MC14050BF	IC	1	
IC8211	AN79L05	IC	1	
IC8300	L7A0543	IC	1	
IC8301	MC74HC541AF	IC	1	
IC8302	VSI0804B	IC	1	
IC8303	VSI0806	IC	1	
IC8304	VSI0808D	IC	1	
IC8305	74F541SJ	IC	1	
IC8306	SN74LS682NS	IC	1	
IC8307,08	MC74HC04AF	IC	2	
IC8309	MC74HC125AF	IC	1	
IC8310	MC74HC541AF	IC	1	
IC8311	MC14538BF	IC	1	
IC8312	MC74HC157AF	IC	1	
IC8313,14	74F541SJ	IC	2	
IC8316	74F74SJ	IC	1	
IC8317	MC74HC541AF	IC	1	
IC8319	VSI0954	IC	1	
IC8320	VSI0955	IC	1	
IC8321	VSI0956	IC	1	
IC8322	VSI0957	IC	1	
IC8323	VSI0958	IC	1	
IC8324	VSI0959	IC	1	
IC8325,26	SN74AS244NS	IC	2	
IC8327	MC74HC86F	IC	1	
IC8328	MC74HC32AF	IC	1	
IC8400-02	MC74HC138AF	IC	3	
IC8403	MC74HC04AF	IC	1	
IC8404	MC74HC74AF	IC	1	

Ref.No.	Part No.	Part Name & Description	Pcs	Remarks
IC8405	MC74HC4075F	IC	1	
IC8406	TL7705CPB	IC	1	
IC8407	MC74HCU04F	IC	1	
IC8408	MC74HC393F	IC	1	
IC8409	MB8464A80LFF	IC	1	
IC8410	MC34051P	IC	1	
IC8411	SN74LS541NS	IC	1	
IC8412	UPD78C10CW	IC	1	
IC8413	MC74HC573AF	IC	1	
IC8414	VSI1087P	IC	1	
IC8415	SN74LS541NS	IC	1	
IC8416	SN74LS245NS	IC	1	
IC8417,18	MC74HC32AF	IC	2	
IC8419	UPD71055GB	IC	1	
IC8420,21	SN74S1051NS	DIODE	2	
IC8501,02	74F574SJ	IC	2	
IC8503	74F398SC	IC	1	
IC8504-08	UPD42102G-3	IC	5	
IC8509	VSI0816	IC	1	
IC8510	VSI0817B	IC	1	
IC8511,12	MSM514222B3	IC	2	
IC8514-17	MC74HC574AF	IC	4	
IC8518	74F399SJ	IC	1	
IC8519	VSI0820	IC	1	
IC8520	L7A0344	IC	1	
IC8521,22	MC74HC574AF	IC	2	
IC8523	VSI0810A	IC	1	
IC8524	VSI0812	IC	1	
IC8527	MC74HC688F	IC	1	
IC8528	MC74HC04AF	IC	1	
IC8531	MC74HC11F	IC	1	
IC8532	MC74HC86F	IC	1	
IC8533,34	MC74HC574AF	IC	2	
IC8535	VSI0821A	IC	1	
IC8536,37	UPD42505C-50	IC	2	
IC8538	UPD42101G-3	IC	1	
IC8540	MC74HC574AF	IC	1	
IC8541	74F574SJ	IC	1	
IC8542	L29C520PC22	IC	1	
IC8544	MC74HC4051F	IC	1	
IC8545	SN74ALS576B		1	
IC8546	MC74HC574AF	IC	1	
IC8546	VSI0823A	IC	1	
IC8547-54	MSM514222B3	IC	8	
IC8555	MC74HC574AF	IC	1	
IC8556	VSI0825A	IC	1	
IC8557	VSI0826A	IC	1	
IC8558	MC74HC08AF	IC	1	
IC8560,61	MSM514222B3	IC	2	
IC8562	VSI0818A	IC	1	
IC8563	L29C520PC22	IC	1	
IC8564	MC74HC574AF	IC	1	
IC8565	VSI0814A	IC	1	
IC8566	MC74HC574AF	IC	1	
IC8567	SN74AS244NS	IC	1	
IC8570	MSM514222B3	IC	1	
IC8570	74F541SJ	IC	1	
IC8571	MSM514222B3	IC	1	
IC8580,81	SN74AS244NS	IC	2	
IC8590-92	MC74HC574AF	IC	3	
IC8593	VSI0988	IC	1	
IC8594	VSI0989	IC	1	
IC8595	VSI0998	IC	1	
IC8600	MC74HC86F	IC	1	
IC8601-03	UPD42505C-50	IC	3	
IC8604	SN74LS399NS	IC	1	
IC8604-09	74F399SJ	IC	6	
IC8610	UPD65022F046	IC	1	
IC8611	UPD65042F024	IC	1	
IC8612	MC74HC161AF	IC	1	
IC8613	UPD42101G-3	IC	1	
IC8614	UPD42505C-50	IC	1	
IC8615	MC74HC574AF	IC	1	
IC8616	UPD42505C-50	IC	1	
IC8617,18	MC74HC574AF	IC	2	

Ref.No.	Part No.	Part Name & Description	Pcs	Remarks
IC8619,20	74F283SJ	IC	2	
IC8621	UPD42505C-50	IC	1	
IC8622	UPD65013F101	IC	1	
IC8623	UPD65042F024	IC	1	
IC8624,25	SN74LS399NS	IC	2	
IC8626	VSI0839	IC	1	
IC8627	UPD42101G-3	IC	1	
IC8629	SN74ALS576B		1	
IC8633	VSI0830	IC	1	
IC8634	VSI0832	IC	1	
IC8636	VSI0836	IC	1	
IC8637	VSI0838B	IC	1	
IC8650	74F86SJ	IC	1	
IC8651	SN74AS244NS	IC	1	
IC8700,01	MC74HC574AF	IC	2	
IC8702,03	74F574SJ	IC	2	
IC8704	MC74HC74AF	IC	1	
IC8705-09	UPD42102G-3	IC	5	
IC8710	L7A0378	IC	1	
IC8711	L7A0348	IC	1	
IC8712	74F574SJ	IC	1	
IC8713	SN74AS244NS	IC	1	
IC8714	MC74HC164F	IC	1	
IC8806-08	MC10124L	IC	3	
IC8809,10	74F574SJ	IC	2	
IC8811	SN74AS244NS	IC	1	
IC8813	L7A0341	IC	1	
IC8815	VSI1024	IC	1	
IC8816,17	MC74HC574AF	IC	2	
IC8818	CY7C136-35JC	IC	1	
IC8819	MC74HC574AF	IC	1	
IC8820	IDTFCT821AS0	IC	1	
IC8821	SN74AS244NS	IC	1	
IC8822,23	MC74HC74AF	IC	2	
IC8824	VSI1022	IC	1	
IC8825	MC74HC541AF	IC	1	
IC8851	VSI0845	IC	1	
IC8852	VSI0844A	IC	1	
IC8853,54	UPD42101G-3	IC	2	
IC8855,56	74F574SJ	IC	2	
IC8860-62	MC74HC04AF	IC	3	
IC8900	MC10124L	IC	1	
IC8901	MC10131L	IC	1	
IC8902,03	MC10116L	IC	2	
IC8904	MC10104L	IC	1	
IC8905	MC10115L	IC	1	
IC8906	MC10125L	IC	1	
IC8907	SN74AS244NS	IC	1	
IC8908	MC10124L	IC	1	
IC8909	MC10104L	IC	1	
IC8910	MC10125L	IC	1	
IC8911	MC10115L	IC	1	
IC8912	MC10116L	IC	1	
IC8952,53	SN74LS684NS	IC	2	
IC8954-58	SN74AS244NS	IC	5	
IC8965,66	MC74HC541AF	IC	2	
IC8967,68	MC74HC574AF	IC	2	
IC8969,70	MC74HC540AF	IC	2	
IC8971-74	74F283SJ	IC	4	
IC8976	MC74HC574AF	IC	1	
IC8978	MC74HC574AF	IC	1	
IC8979	MC74HC04AF	IC	1	
IC8980	74F00SJ	IC	1	
IC8982	MC74HC00AF	IC	1	
IC8983	SN74AS244NS	IC	1	
IC8984	VSI0840A	IC	1	
IC8985	VSI0842A	IC	1	
IC8986	MC74HC164F	IC	1	
IC8987-90	UPD42102G-3	IC	4	
IC8991,92	MC74HC574AF	IC	2	
IC8993,94	74F541SJ	IC	2	
IC8995	MC74HC164F	IC	1	
IC8996,97	74F541SJ	IC	2	
IC8998,99	SN74S1051NS	DIODE	2	
ICS8303	VJS3096328	CONNECTOR (FEMALE)	1	

Ref.No.	Part No.	Part Name & Description	Pcs	Remarks
ICS8412	VJS3111	CONNECTOR (FEMALE)	1	
ICS8414	VJS2577	CONNECTOR (FEMALE)	1	
ICS8518	VJS3198A052	CONNECTOR (FEMALE)	1	
ICS8519	VJS3198A044	CONNECTOR (FEMALE)	1	
L8001-05	VLF0931	FILTER	5	
L8006-09	VLQEL05S470J	COIL 47UH	4	
L8011	VLQEL05S390J	COIL 39UH	1	
L8012,13	VLQEL05S221J	COIL 220UH	2	
L8100-02	VLQEL05S470J	COIL 47UH	3	
L8201	VLQEL05S180J	COIL 18UH	1	
L8202	VLQEL05S560J	COIL 56UH	1	
L8203	VLQEL05S221J	COIL 220UH	1	
L8204	VLQEL05S390J	COIL 39UH	1	
L8205	VLQEL05S470J	COIL 47UH	1	
L8206	VLQEL05S390J	COIL 39UH	1	
P8007,08	VJP3151	CONNECTOR (MALE)	2	
Q8001,02	2SB709-R	TRANSISTOR	2	
Q8003,04	2SK606	TRANSISTOR	2	
Q8100,01	2SC1216	TRANSISTOR	2	
Q8102,03	2SD601-R	TRANSISTOR	2	
Q8104	UN2212	TRANSISTOR	1	
Q8105,06	2SK374-R	TRANSISTOR	2	
Q8200,01	2SB709-R	TRANSISTOR	2	
Q8202,03	2SD601-R	TRANSISTOR	2	
Q8204	2SB709-R	TRANSISTOR	1	
Q8205	2SD601-R	TRANSISTOR	1	
Q8206,07	2SB709-R	TRANSISTOR	2	
Q8208,09	2SC2295-B	TRANSISTOR	2	
Q8800	2SB709-R	TRANSISTOR	1	
		RESISTORS		
R8001	ERJ6GEYJ104	M.RESISTOR CH1/10W 100K	1	
R8002	ERJ6GEYJ684	M.RESISTOR CH1/10W 680K	1	
R8003	ERJ6GEYJ103	M.RESISTOR CH1/10W 10K	1	
R8004,05	ERJ6GEYJ822	M.RESISTOR CH1/10W 8.2K	2	
R8006	ERJ6GEYJ221	M.RESISTOR CH1/10W 220	1	
R8007	ERJ6GEYJ332	M.RESISTOR CH1/10W 3.3K	1	
R8008-10	ERJ6GEYJ222	M.RESISTOR CH1/10W 2.2K	3	
R8011	ERJ6GEYF333	M.RESISTOR CH1/10W 33K	1	
R8012,13	ERJ6GEYJ222	M.RESISTOR CH1/10W 2.2K	2	
R8014	ERJ6GEYJ822	M.RESISTOR CH1/10W 8.2K	1	
R8015	ERJ6GEYJ563	M.RESISTOR CH1/10W 56K	1	
R8016	ERJ6GEYJ273	M.RESISTOR CH1/10W 27K	1	
R8017	ERJ6GEYJ823	M.RESISTOR CH1/10W 82K	1	
R8018	ERJ6GEYJ273	M.RESISTOR CH1/10W 27K	1	
R8019	ERJ6GEYJ682	M.RESISTOR CH1/10W 6.8K	1	
R8020	ERJ6GEYJ822	M.RESISTOR CH1/10W 8.2K	1	
R8021	ERJ6GEYJ682	M.RESISTOR CH1/10W 6.8K	1	
R8022	ERJ6GEYJ273	M.RESISTOR CH1/10W 27K	1	
R8024,25	ERJ6GEYJ103	M.RESISTOR CH1/10W 10K	2	
R8026	ERJ6GEYJ101	M.RESISTOR CH1/10W 100	1	
R8027,28	ERJ6GEYJ562	M.RESISTOR CH1/10W 5.6K	2	
R8029	ERJ6GEYJ332	M.RESISTOR CH1/10W 3.3K	1	
R8030	ERJ6GEYJ101	M.RESISTOR CH1/10W 100	1	
R8031	ERJ6GEYJ681	M.RESISTOR CH1/10W 680	1	
R8032	ERJ6GEYF472	M.RESISTOR CH1/10W 4.7K	1	
R8033	ERJ6GEYJ682	M.RESISTOR CH1/10W 6.8K	1	
R8034	ERJ6GEYG153	M.RESISTOR CH1/10W 15K	1	
R8035	ERJ6GEYJ103	M.RESISTOR CH1/10W 10K	1	
R8036	ERJ6GEYJ102	M.RESISTOR CH1/10W 1K	1	
R8037	ERJ6GEYJ103	M.RESISTOR CH1/10W 10K	1	
R8038	ERJ6GEYJ222	M.RESISTOR CH1/10W 2.2K	1	
R8039	ERJ6GEYJ152	M.RESISTOR CH1/10W 1.5K	1	
R8040	ERJ6GEYF333	M.RESISTOR CH1/10W 33K	1	

Ref.No.	Part No.	Part Name & Description	Pcs	Remarks
R8041	ERJ6GEYJ223	M.RESISTOR CH1/10W 22K	1	
R8042	ERJ6GEYJ105	M.RESISTOR CH1/10W 1M	1	
R8043	ERJ6GEYJ273	M.RESISTOR CH1/10W 27K	1	
R8044	ERJ6GEYJ562	M.RESISTOR CH1/10W 5.6K	1	
R8045	ERJ6GEYJ681	M.RESISTOR CH1/10W 680	1	
R8046	ERJ6GEYJ122	M.RESISTOR CH1/10W 1.2K	1	
R8047	ERJ6GEYJ102	M.RESISTOR CH1/10W 1K	1	
R8048	ERJ6GEYJ473	M.RESISTOR CH1/10W 47K	1	
R8049	ERJ6GEYJ223	M.RESISTOR CH1/10W 22K	1	
R8050	ERJ6GEYJ183	M.RESISTOR CH1/10W 18K	1	
R8051,52	ERJ6GEYJ473	M.RESISTOR CH1/10W 47K	2	
R8053,54	ERJ6GEYJ332	M.RESISTOR CH1/10W 3.3K	2	
R8055	ERJ6GEYJ102	M.RESISTOR CH1/10W 1K	1	
R8056	ERJ6GEYJ122	M.RESISTOR CH1/10W 1.2K	1	
R8057	ERJ6GEYJ102	M.RESISTOR CH1/10W 1K	1	
R8060	ERJ6GEYF124	M.RESISTOR CH1/10W 120K	1	
R8061	ERJ6GEYJ101	M.RESISTOR CH1/10W 100	1	
R8062	ERJ6GEYJ221	M.RESISTOR CH1/10W 220	1	
R8063	ERJ6GEYJ184	M.RESISTOR CH1/10W 180K	1	
R8064	ERJ6GEYJ101	M.RESISTOR CH1/10W 100	1	
R8065	ERJ6GEY0R00	M.RESISTOR CH 1/10W 0	1	
R8070	VRE0034E113	M.RESISTOR CH 1/10W 11K	1	
R8071	ERJ6GEYJ273	M.RESISTOR CH1/10W 27K	1	
R8100	ERJ6GEYJ183	M.RESISTOR CH1/10W 18K	1	
R8101-03	ERJ6GEYJ102	M.RESISTOR CH1/10W 1K	3	
R8104	ERJ6GEYJ562	M.RESISTOR CH1/10W 5.6K	1	
R8105	ERJ6GEYJ103	M.RESISTOR CH1/10W 10K	1	
R8106	VRE0034E821	M.RESISTOR CH 1/10W 820	1	
R8107	VRE0034E392	M.RESISTOR CH 1/10W 3.9K	1	
R8108	VRE0034E103	M.RESISTOR CH 1/10W 10K	1	
R8109,10	ERJ6GEYJ105	M.RESISTOR CH1/10W 1M	2	
R8111	ERJ6GEYG153	M.RESISTOR CH1/10W 15K	1	
R8112	ERJ6GEYJ104	M.RESISTOR CH1/10W 100K	1	
R8113	ERJ6GEYJ103	M.RESISTOR CH1/10W 10K	1	
R8114	ERJ6GEYG153	M.RESISTOR CH1/10W 15K	1	
R8115	ERJ6GEYJ103	M.RESISTOR CH1/10W 10K	1	
R8116	ERJ6GEYJ104	M.RESISTOR CH1/10W 100K	1	
R8117	ERJ6GEYJ563	M.RESISTOR CH1/10W 56K	1	
R8118,19	ERJ6GEYJ562	M.RESISTOR CH1/10W 5.6K	2	
R8120	ERJ6GEYJ102	M.RESISTOR CH1/10W 1K	1	
R8121	ERJ6GEYJ332	M.RESISTOR CH1/10W 3.3K	1	
R8122	ERJ6GEYJ152	M.RESISTOR CH1/10W 1.5K	1	
R8123	ERJ6GEYJ222	M.RESISTOR CH1/10W 2.2K	1	
R8124	ERJ6GEYJ152	M.RESISTOR CH1/10W 1.5K	1	
R8125	ERJ6GEYJ822	M.RESISTOR CH1/10W 8.2K	1	
R8126	ERJ6GEYJ222	M.RESISTOR CH1/10W 2.2K	1	
R8127	ERJ6GEYJ102	M.RESISTOR CH1/10W 1K	1	
R8128	ERJ6GEYJ391	M.RESISTOR CH1/10W 390	1	
R8129,30	ERJ6GEYJ824	M.RESISTOR CH1/10W 820K	2	
R8131	ERJ6GEYJ103	M.RESISTOR CH1/10W 10K	1	
R8132	ERJ6GEYJ223	M.RESISTOR CH1/10W 22K	1	
R8134	ERJ6GEY0R00	M.RESISTOR CH 1/10W 0	1	
R8136	ERJ6GEY0R00	M.RESISTOR CH 1/10W 0	1	
R8139	ERJ6GEY0R00	M.RESISTOR CH 1/10W 0	1	
R8141,42	ERJ6GEYJ822	M.RESISTOR CH1/10W 8.2K	2	
R8143	ERJ6GEYJ512	M.RESISTOR CH 1/10W 5.1K	1	
R8144	ERJ6GEYJ391	M.RESISTOR CH1/10W 390	1	
R8145	ERJ6GEYJ103	M.RESISTOR CH1/10W 10K	1	
R8146,47	VRE0034E622	M.RESISTOR CH 1/10W 6.2K	2	
R8148	VRE0034E681	M.RESISTOR CH 1/10W 680	1	
R8149	ERJ6GEYF333	M.RESISTOR CH1/10W 33K	1	
R8150	ERJ6GEYJ821	M.RESISTOR CH1/10W 820	1	
R8151	ERJ6GEYJ183	M.RESISTOR CH1/10W 18K	1	
R8152	ERJ6GEYJ101	M.RESISTOR CH1/10W 100	1	
R8153	ERJ6GEYJ122	M.RESISTOR CH1/10W 1.2K	1	
R8154	ERJ6GEYJ823	M.RESISTOR CH1/10W 82K	1	
R8155	ERJ6GEYJ105	M.RESISTOR CH1/10W 1M	1	
R8156	ERJ6GEYJ104	M.RESISTOR CH1/10W 100K	1	
R8157,58	ERJ6GEYJ273	M.RESISTOR CH1/10W 27K	2	
R8200	ERJ6GEYJ103	M.RESISTOR CH1/10W 10K	1	
R8201	ERJ6GEYG153	M.RESISTOR CH1/10W 15K	1	
R8202	ERJ6GEYJ122	M.RESISTOR CH1/10W 1.2K	1	
R8203	ERJ6GEYJ821	M.RESISTOR CH1/10W 820	1	
R8204	ERJ6GEYJ471	M.RESISTOR CH1/10W 470	1	
R8205	ERJ6GEYJ272	M.RESISTOR CH1/10W 2.7K	1	

Ref.No.	Part No.	Part Name & Description	Pcs	Remarks
R8206,07	ERJ6GEYJ222	M.RESISTOR CH1/10W 2.2K	2	
R8208	ERJ6GEYJ183	M.RESISTOR CH1/10W 18K	1	
R8209	ERJ6GEYJ821	M.RESISTOR CH1/10W 820	1	
R8211	ERJ6GEYJ102	M.RESISTOR CH1/10W 1K	1	
R8212	ERJ6GEYJ121	M.RESISTOR CH1/10W 120	1	
R8213,14	ERJ6GEYJ102	M.RESISTOR CH1/10W 1K	2	
R8215	ERJ6GEYJ562	M.RESISTOR CH1/10W 5.6K	1	
R8216	ERJ6GEYJ273	M.RESISTOR CH1/10W 27K	1	
R8217	ERJ6GEYJ103	M.RESISTOR CH1/10W 10K	1	
R8218	ERJ6GEYJ101	M.RESISTOR CH1/10W 100	1	
R8219	ERJ6GEYJ103	M.RESISTOR CH1/10W 10K	1	
R8220	ERJ6GEYJ821	M.RESISTOR CH1/10W 820	1	
R8221	ERJ6GEYJ102	M.RESISTOR CH1/10W 1K	1	
R8222,23	ERJ6GEYJ561	M.RESISTOR CH1/10W 560	2	
R8224	ERJ6GEYJ221	M.RESISTOR CH1/10W 220	1	
R8225	ERJ6GEYJ222	M.RESISTOR CH1/10W 2.2K	1	
R8226	ERJ6GEYJ392	M.RESISTOR CH1/10W 3.9K	1	
R8227,28	ERJ6GEYJ221	M.RESISTOR CH1/10W 220	2	
R8229	VRE0034E750	M.RESISTOR CH 1/10W 75	1	
R8230	ERJ6GEYJ682	M.RESISTOR CH1/10W 6.8K	1	
R8231	ERJ6GEYJ562	M.RESISTOR CH1/10W 5.6K	1	
R8232	ERJ6GEYJ103	M.RESISTOR CH1/10W 10K	1	
R8233	ERJ6GEYJ821	M.RESISTOR CH1/10W 820	1	
R8234	ERJ6GEYJ473	M.RESISTOR CH1/10W 47K	1	
R8235	ERJ6GEYJ562	M.RESISTOR CH1/10W 5.6K	1	
R8236,37	ERJ6GEYJ681	M.RESISTOR CH1/10W 680	2	
R8238	ERJ6GEYJ105	M.RESISTOR CH1/10W 1M	1	
R8239	ERJ6GEYJ473	M.RESISTOR CH1/10W 47K	1	
R8240	ERJ6GEYJ222	M.RESISTOR CH1/10W 2.2K	1	
R8241	ERJ6GEYJ102	M.RESISTOR CH1/10W 1K	1	
R8242	ERJ6GEYJ103	M.RESISTOR CH1/10W 10K	1	
R8243	ERJ6GEYJ682	M.RESISTOR CH1/10W 6.8K	1	
R8244	ERJ6GEYJ562	M.RESISTOR CH1/10W 5.6K	1	
R8245	ERJ6GEYJ183	M.RESISTOR CH1/10W 18K	1	
R8246	ERJ6GEYJ821	M.RESISTOR CH1/10W 820	1	
R8247	ERJ6GEYJ334	M.RESISTOR CH1/10W 330K	1	
R8248	ERJ6GEYJ562	M.RESISTOR CH1/10W 5.6K	1	
R8249,50	ERJ6GEYJ681	M.RESISTOR CH1/10W 680	2	
R8251	ERJ6GEYJ105	M.RESISTOR CH1/10W 1M	1	
R8252	ERJ6GEYJ104	M.RESISTOR CH1/10W 100K	1	
R8253	ERJ6GEYJ222	M.RESISTOR CH1/10W 2.2K	1	
R8254	ERJ6GEYJ103	M.RESISTOR CH1/10W 10K	1	
R8255-60	ERJ6GEYJ471	M.RESISTOR CH1/10W 470	6	
R8261	ERJ6GEYJ681	M.RESISTOR CH1/10W 680	1	
R8300-09	ERJ6GEYJ103	M.RESISTOR CH1/10W 10K	10	
R8310	ERJ6GEYJ223	M.RESISTOR CH1/10W 22K	1	
R8313	ERJ6GEY0R00	M.RESISTOR CH 1/10W 0	1	
R8317	ERJ6GEY0R00	M.RESISTOR CH 1/10W 0	1	
R8320	ERJ6GEY0R00	M.RESISTOR CH 1/10W 0	1	
R8323-44	ERJ6GEYJ101	M.RESISTOR CH1/10W 100	22	
R8346	ERJ6GEYJ101	M.RESISTOR CH1/10W 100	1	
R8347	ERJ6GEY0R00	M.RESISTOR CH 1/10W 0	1	
R8351	ERJ6GEYJ101	M.RESISTOR CH1/10W 100	1	
R8400	ERJ6GEYJ562	M.RESISTOR CH1/10W 5.6K	1	
R8401	ERJ6GEYJ222	M.RESISTOR CH1/10W 2.2K	1	
R8402,03	ERJ6GEYJ103	M.RESISTOR CH1/10W 10K	2	
R8404	ERJ6GEYJ105	M.RESISTOR CH1/10W 1M	1	
R8405	ERJ6GEYJ222	M.RESISTOR CH1/10W 2.2K	1	
R8406,07	ERJ6GEYF472	M.RESISTOR CH1/10W 4.7K	2	
R8408,09	ERJ6GEYJ103	M.RESISTOR CH1/10W 10K	2	
R8410,11	ERJ6GEYJ471	M.RESISTOR CH1/10W 470	2	
R8412	ERJ6GEYJ470	M.RESISTOR CH1/10W 47	1	
R8501-24	ERJ6GEYJ103	M.RESISTOR CH1/10W 10K	24	
R8526,27	ERJ6GEYJ103	M.RESISTOR CH1/10W 10K	2	
R8529-38	ERJ6GEYJ103	M.RESISTOR CH1/10W 10K	10	
R8600-09	ERJ6GEYJ103	M.RESISTOR CH1/10W 10K	10	
R8800-21	ERJ6GEYJ471	M.RESISTOR CH1/10W 470	22	
R8827	ERJ6GEYJ103	M.RESISTOR CH1/10W 10K	1	
R8828	ERJ6GEYJ561	M.RESISTOR CH1/10W 560	1	
R8829	ERJ6GEYJ223	M.RESISTOR CH1/10W 22K	1	
R8830-39	ERJ6GEYJ101	M.RESISTOR CH1/10W 100	10	
R8850-71	ERJ6GEYJ330	M.RESISTOR CH1/10W 33	22	
R8880	ERJ6GEY0R00	M.RESISTOR CH 1/10W 0	1	
R8900-21	ERJ6GEYJ471	M.RESISTOR CH1/10W 470	22	
R8922	ERJ6GEYJ101	M.RESISTOR CH1/10W 100	1	

S MOTHER VEP80593A

Ref.No.	Part No.	Part Name & Description	Pcs	Remarks
R8923,24	ERJ6GEYJ471	M.RESISTOR CH1/10W 470	2	
R8954	ERJ6GEY0R00	M.RESISTOR CH 1/10W 0	1	
R8960,61	ERJ6GEYG680	M.RESISTOR CH1/10W 68	2	
SW8001-04	VJP1940	CONNECTOR (MALE)	4	
SW8010,11	VJP1940	CONNECTOR (MALE)	2	
SW8100-03	VJP1940	CONNECTOR (MALE)	4	
SW8301	VJP1940	CONNECTOR (MALE)	1	
SW8400,01	VJP1940	CONNECTOR (MALE)	2	
SW8403	VJP1940	CONNECTOR (MALE)	1	
SW8501,02	VJP1940	CONNECTOR (MALE)	2	
SW8550	VJP1940	CONNECTOR (MALE)	1	
SW8600,01	VJP1940	CONNECTOR (MALE)	2	
SW8602	VSS023708	SWITCH	1	
SW8604	VJP1940	CONNECTOR (MALE)	1	
SW8701	VJP1940	CONNECTOR (MALE)	1	
SW8802	VSS0207	SWITCH	1	
SW8860,61	VSS023708	SWITCH	2	
SWS8001-04	VJS1940	CONNECTOR (FEMALE)	4	
SWS8010,11	VJS1940	CONNECTOR (FEMALE)	2	
SWS8100-03	VJS1940	CONNECTOR (FEMALE)	4	
SWS8301	VJS1940	CONNECTOR (FEMALE)	1	
SWS8400	VJS1940	CONNECTOR (FEMALE)	1	
SWS8403	VJS1940	CONNECTOR (FEMALE)	1	
SWS8501,02	VJS1940	CONNECTOR (FEMALE)	2	
SWS8550	VJS1940	CONNECTOR (FEMALE)	1	
SWS8600,01	VJS1940	CONNECTOR (FEMALE)	2	
SWS8604	VJS1940	CONNECTOR (FEMALE)	1	
SWS8701	VJS1940	CONNECTOR (FEMALE)	1	
TP8001-09	VJR0646	TEST POINT	9	
TP8100-08	VJR0646	TEST POINT	9	
TP8200	VJR0646	TEST POINT	1	
TP8300-09	VJR0646	TEST POINT	10	
TP8311,12	VJR0646	TEST POINT	2	
TP8314,15	VJR0646	TEST POINT	2	
TP8400,01	VJR0646	TEST POINT	2	
TP8500-05	VJR0646	TEST POINT	6	
TP8600-05	VJR0646	TEST POINT	6	
TP8950-52	VJR0646	TEST POINT	3	
TP8956-62	VJR0646	TEST POINT	7	
TPG8001,02	VJR0646	TEST POINT	2	
TPG8100-02	VJR0646	TEST POINT	3	
TPG8200	VJR0646	TEST POINT	1	
TPG8300	VJR0646	TEST POINT	1	
TPG8400	VJR0646	TEST POINT	1	
TPG8500	VJR0646	TEST POINT	1	
TPG8600	VJR0646	TEST POINT	1	
VR8001,02	VRV0109B503	V.RESISTOR 50K	2	
VR8003-05	VRV0109B502	V.RESISTOR 5K	3	
VR8100-02	VRV0109B502	V.RESISTOR 5K	3	
VR8103,04	VRV0109B103	V.RESISTOR 10K	2	
VR8105,06	VRV0109B202	V.RESISTOR 2K	2	
VR8107	VRV0109B203	V.RESISTOR 20K	1	
VR8108	VRV0109B103	V.RESISTOR 10K	1	
VR8200	VRV0109B203	V.RESISTOR 20K	1	
VR8201	VRV0109B502	V.RESISTOR 5K	1	
VR8202	VRV0109B202	V.RESISTOR 2K	1	
VR8203	VRV0109B503	V.RESISTOR 50K	1	
VR8204,05	VRV0109B102	V.RESISTOR 1K	2	
VR8206	VRV0109B502	V.RESISTOR 5K	1	
X8001	VSX0363	CRYSTAL OSCILLATOR	1	
X8100	VSX0270	CRYSTAL OSCILLATOR	1	
X8200	VSX0567A	CRYSTAL OSCILLATOR	1	
X8201	VSX0270	CRYSTAL OSCILLATOR	1	

Ref.No.	Part No.	Part Name & Description	Pcs	Remarks
X8400	VSX0156	CRYSTAL OSCILLATOR	1	
X8401	VSX0178	CRYSTAL OSCILLATOR	1	
		MISCELLANEOUS		
	VGQ0291	P.C.BOARD NAME PLATE	1	
	VML2143	CARD PULLER	1	
	VML2144	CARD PULLER	1	
	VMP3048	P.C.BOARD HOLDER ANGLE	2	
	VXA4418	P.C.BOARD SHIELD PLATE	1	
	XNG26E	NUT	4	
	XTV3+6FFR	SCREW	9	
	XYN26+C12	SCREW	4	
	VMZ1935	ISOLATION SHEET	1	
	VEP80593A	P.C.BOARD W/COMPONENT S MOTHER		
P201-18	VJS2899A096	CONNECTOR (FEMALE)	18	
P219	VJP1231T	CONNECTOR (MALE)	1	
P220,21	VJP3080	CONNECTOR (MALE)	2	
P222	VJP2824B004	CONNECTOR (MALE)	1	
P224	VJP1231T	CONNECTOR (MALE)	1	
P226	VJP1147	CONNECTOR (MALE)	1	
P227,28	VJP1230T	CONNECTOR (MALE)	2	
P229,30	VJP1233T	CONNECTOR (MALE)	2	
P231	VJP1230T	CONNECTOR (MALE)	1	
P232	VJP1231T	CONNECTOR (MALE)	1	
P233	VJP3098A032	CONNECTOR (MALE)	1	
P235	VJP1231T	CONNECTOR (MALE)	1	
P236	VJP3083	CONNECTOR (MALE)	1	
P237	VJP1230R	CONNECTOR (MALE)	1	
P238	VJP1233T	CONNECTOR (MALE)	1	
P240	VJP1230T	CONNECTOR (MALE)	1	
P241	VJP3098A026	CONNECTOR (MALE)	1	
P242	VJP3098A032	CONNECTOR (MALE)	1	
P245	VEE7216		1	
P246	VJP3080	CONNECTOR (MALE)	1	
P247	VJP1232T	CONNECTOR (MALE)	1	
P248	VJP2824A003	CONNECTOR (MALE)	1	
P249	VJP1235T	CONNECTOR (MALE)	1	
P253	VJP2824A010	CONNECTOR (MALE)	1	
P255,56	VJP1231T	CONNECTOR (MALE)	2	
P257	VJP1230R	CONNECTOR (MALE)	1	
P258	VJP1230T	CONNECTOR (MALE)	1	
P259	VJP1145T	CONNECTOR (MALE)	1	
P260	VJP3079	CONNECTOR (MALE)	1	
P261	VJP1235T	CONNECTOR (MALE)	1	
P263	VJP3098A040	CONNECTOR (MALE)	1	
P268	VJP1233T	CONNECTOR (MALE)	1	
P269	VJP3080	CONNECTOR (MALE)	1	
P270	VJP1233T	CONNECTOR (MALE)	1	
P272	VJP1234T	CONNECTOR (MALE)	1	
P277	VJP1230T	CONNECTOR (MALE)	1	
P278	VJP1230G	CONNECTOR (MALE)	1	
P290	VJP1236T	CONNECTOR (MALE)	1	
		MISCELLANEOUS		
	VJF0300	BINDER	1	
	VMP3026	P.C.BOARD HOLDER ANGLE	1	
	VMP3027	P.C.BOARD HOLDER ANGLE	1	

S1

S1 EQUALIZER CH0 VEP85021C
S1 SUB VEP87002A

Ref.No.	Part No.	Part Name & Description	Pcs	Remarks
	VMP3028	P.C.BOARD HOLDER ANGLE	1	
	XTV26+6F	SCREW	36	
	XTV3+6F	SCREW	12	
	VEP85021C	P.C.BOARD W/COMPONENT		
		S1 EQUALIZER CH0		
	VEP87002A	P.C.BOARD W/COMPONENT		FOR VEP85021C
		S1 SUB		
		CAPACITORS		
C347	ECUM1H220JCN	C.CAPACITOR CH 50V 22P	1	
C350,51	ECUM1E104ZFN	E.CAPACITOR 25V 0.1U	2	
C5001	ECUM1E104ZFN	E.CAPACITOR 25V 0.1U	1	
C5002	ECEA1CGE471	E.CAPACITOR 16V 470U	1	
C5003,04	ECUM1E104ZFN	E.CAPACITOR 25V 0.1U	2	
C5005	ECEA1CGE471	E.CAPACITOR 16V 470U	1	
C5006,07	ECUM1E104ZFN	E.CAPACITOR 25V 0.1U	2	
C5008	ECEA1CGE471	E.CAPACITOR 16V 470U	1	
C5009,10	ECUM1E104ZFN	E.CAPACITOR 25V 0.1U	2	
C5011	ECEA1CGE471	E.CAPACITOR 16V 470U	1	
C5012	ECUM1E104ZFN	E.CAPACITOR 25V 0.1U	1	
C5013,14	ECA1HXS2R2	E.CAPACITOR 50V 2.2U	2	
C5015	ECUM1E104ZFN	E.CAPACITOR 25V 0.1U	1	
C5016,17	ECUM1H561JCN	C.CAPACITOR CH 50V 560P	2	
C5018	ECUM1E104ZFN	E.CAPACITOR 25V 0.1U	1	
C5020	ECUM1E104ZFN	E.CAPACITOR 25V 0.1U	1	
C5021,22	ECA1HXS2R2	E.CAPACITOR 50V 2.2U	2	
C5023	ECUM1E104ZFN	E.CAPACITOR 25V 0.1U	1	
C5024,25	ECUM1H561JCN	C.CAPACITOR CH 50V 560P	2	
C5026	ECUM1E104ZFN	E.CAPACITOR 25V 0.1U	1	
C5028,29	ECUM1E104ZFN	E.CAPACITOR 25V 0.1U	2	
C5030,31	ECUM1H151JCN	C.CAPACITOR CH 50V 150P	2	
C5032-34	ECUM1E104ZFN	E.CAPACITOR 25V 0.1U	3	
C5035	ECUM1H180JCN	C.CAPACITOR CH 50V 18P	1	
C5036,37	ECUM1E104ZFN	E.CAPACITOR 25V 0.1U	2	
C5038	ECUM1H104KBM	C.CAPACITOR CH 50V 0.1U	1	
C5039-44	ECUM1E104ZFN	E.CAPACITOR 25V 0.1U	6	
C5045	ECUM1H104KBM	C.CAPACITOR CH 50V 0.1U	1	
C5046	VCM0058C018	C.CAPACITOR	1	
C5047	VCM0059F058	C.CAPACITOR	1	
C5048	VCM0059F076	C.CAPACITOR	1	
C5049	VCM0059F200	C.CAPACITOR	1	
C5050,51	ECUM1E104ZFN	E.CAPACITOR 25V 0.1U	2	
C5052	ECUM1H392KBN	C.CAPACITOR CH 50V 3900P	1	
C5053	ECUM1E104ZFN	E.CAPACITOR 25V 0.1U	1	
C5054	ECA1CXS470	E.CAPACITOR 16V 47U	1	
C5055	ECUM1E104ZFN	E.CAPACITOR 25V 0.1U	1	
C5056	ECA1CXS470	E.CAPACITOR 16V 47U	1	
C5057	ECUM1H104KBM	C.CAPACITOR CH 50V 0.1U	1	
C5058-60	ECUM1E104ZFN	E.CAPACITOR 25V 0.1U	3	
C5061,62	ECUM1H104KBM	C.CAPACITOR CH 50V 0.1U	2	
C5063	ECUM1H101JCN	C.CAPACITOR CH 50V 100P	1	
C5064,65	ECUM1E104ZFN	E.CAPACITOR 25V 0.1U	2	
C5066,67	ECUM1H104KBM	C.CAPACITOR CH 50V 0.1U	2	
C5068,69	ECUM1E104ZFN	E.CAPACITOR 25V 0.1U	2	
C5071	ECUM1H104KBM	C.CAPACITOR CH 50V 0.1U	1	
C5072,73	ECUM1E104ZFN	E.CAPACITOR 25V 0.1U	2	
C5074	ECUM1H104KBM	C.CAPACITOR CH 50V 0.1U	1	
C5075-82	ECUM1E104ZFN	E.CAPACITOR 25V 0.1U	8	
C5083	ECUM1H101JCN	C.CAPACITOR CH 50V 100P	1	
C5084	ECUM1E104ZFN	E.CAPACITOR 25V 0.1U	1	
C5085	ECUM1H101JCN	C.CAPACITOR CH 50V 100P	1	
C5086-89	ECUM1E104ZFN	E.CAPACITOR 25V 0.1U	4	
C5090,91	ECUM1H104KBM	C.CAPACITOR CH 50V 0.1U	2	
C5092,93	ECUM1E104ZFN	E.CAPACITOR 25V 0.1U	2	
C5095	ECUM1H104KBM	C.CAPACITOR CH 50V 0.1U	1	
C5096	ECUM1E104ZFN	E.CAPACITOR 25V 0.1U	1	

Ref.No.	Part No.	Part Name & Description	Pcs	Remarks
C5097	ECA1CXS470	E.CAPACITOR 16V 47U	1	
C5098	ECUM1E104ZFN	E.CAPACITOR 25V 0.1U	1	
C5099	ECA1CXS470	E.CAPACITOR 16V 47U	1	
C5100	VCM0058C027	C.CAPACITOR	1	
C5101	VCM0059F047	C.CAPACITOR	1	
C5102	VCM0059F110	C.CAPACITOR	1	
C5103	VCM0060F300	C.CAPACITOR	1	
C5104,05	ECUM1E104ZFN	E.CAPACITOR 25V 0.1U	2	
C5106,07	ECUM1H104KBM	C.CAPACITOR CH 50V 0.1U	2	
C5108-22	ECUM1E104ZFN	E.CAPACITOR 25V 0.1U	15	
C5123,24	ECA1HXS100	E.CAPACITOR 50V 10U	2	
C5125	ECUM1E104ZFN	E.CAPACITOR 25V 0.1U	1	
C5126	ECA1CXS470	E.CAPACITOR 16V 47U	1	
C5127	ECUM1E104ZFN	E.CAPACITOR 25V 0.1U	1	
C5128	ECA1CXS470	E.CAPACITOR 16V 47U	1	
C5129	ECA1HXS100	E.CAPACITOR 50V 10U	1	
C5130	ECUM1H104KBM	C.CAPACITOR CH 50V 0.1U	1	
C5132-34	ECUM1E104ZFN	E.CAPACITOR 25V 0.1U	3	
C5135,36	ECUM1H101JCN	C.CAPACITOR CH 50V 100P	2	
C5137-41	ECUM1E104ZFN	E.CAPACITOR 25V 0.1U	5	
C5143,44	ECUM1E104ZFN	E.CAPACITOR 25V 0.1U	2	
C5145	ECUM1H070DCN	C.CAPACITOR CH 50V 7P	1	
C5147	ECUM1H020CCN	C.CAPACITOR CH 50V 2P	1	
C5204	ECUM1H180JCN	C.CAPACITOR CH 50V 18P	1	
C5208	VCM0058F039	C.CAPACITOR	1	
C5209	ECUM1H391JCN	C.CAPACITOR CH 50V 390P	1	
C5210	ECUM1E104ZFN	E.CAPACITOR 25V 0.1U	1	
C5300-06	ECUM1E104ZFN	E.CAPACITOR 25V 0.1U	7	
C5307	ECUM1C104KBN	C.CAPACITOR CH 16V 0.1U	1	
C5308	ECA1CXS470	E.CAPACITOR 16V 47U	1	
C5309	ECUM1E104ZFN	E.CAPACITOR 25V 0.1U	1	
C5316,17	ECUM1E104ZFN	E.CAPACITOR 25V 0.1U	2	
C5318	ECA1CXS470	E.CAPACITOR 16V 47U	1	
C5319	ECUM1E104ZFN	E.CAPACITOR 25V 0.1U	1	
C5320	ECEA1CGE471	E.CAPACITOR 16V 470U	1	
C5321-32	ECUM1E104ZFN	E.CAPACITOR 25V 0.1U	12	
C5333	ECA1CXS470	E.CAPACITOR 16V 47U	1	
C5334-41	ECUM1E104ZFN	E.CAPACITOR 25V 0.1U	8	
C5342	ECUM1H020CCN	C.CAPACITOR CH 50V 2P	1	
C5343	ECUM1H102JN	C.CAPACITOR CH 50V 1000P	1	
C5344	ECA1HXS100	E.CAPACITOR 50V 10U	1	
C5345	ECUM1E104ZFN	E.CAPACITOR 25V 0.1U	1	
C5346	ECUM1H820JCN	C.CAPACITOR CH 50V 82P	1	
C5347	ECUM1H560JCN	C.CAPACITOR CH 50V 56P	1	
C5400	ECUM1E104ZFN	E.CAPACITOR 25V 0.1U	1	
C5405	ECUM1E104ZFN	E.CAPACITOR 25V 0.1U	1	
C5500-02	ECUM1E104ZFN	E.CAPACITOR 25V 0.1U	3	
C5503,04	ECUM1H151JCN	C.CAPACITOR CH 50V 150P	2	
C5505-18	ECUM1E104ZFN	E.CAPACITOR 25V 0.1U	14	
C5519	ECUM1H102JN	C.CAPACITOR CH 50V 1000P	1	
C5520-26	ECUM1E104ZFN	E.CAPACITOR 25V 0.1U	7	
C5528	ECUM1H104ZFN	C.CAPACITOR CH 50V 0.1U	1	
C5600-06	ECUM1E104ZFN	E.CAPACITOR 25V 0.1U	7	
C5607	ECUM1H331JCN	C.CAPACITOR CH 50V 330P	1	
C5608,09	ECUM1E104ZFN	E.CAPACITOR 25V 0.1U	2	
C5610	ECA1HXS100	E.CAPACITOR 50V 10U	1	
C5611	ECUM1H560JCN	C.CAPACITOR CH 50V 56P	1	
C5612-18	ECUM1E104ZFN	E.CAPACITOR 25V 0.1U	7	
C5619	ECUM1E153KBN	C.CAPACITOR CH 25V 0.015U	1	
C5620-22	ECUM1E104ZFN	E.CAPACITOR 25V 0.1U	3	
C5623	ECA1CXS470	E.CAPACITOR 16V 47U	1	
C5624	ECUM1E104ZFN	E.CAPACITOR 25V 0.1U	1	
C5625	ECA1CXS470	E.CAPACITOR 16V 47U	1	
C5626-30	ECUM1E104ZFN	E.CAPACITOR 25V 0.1U	5	
C5631	ECUM1H331JCN	C.CAPACITOR CH 50V 330P	1	
C5632,33	ECUM1E104ZFN	E.CAPACITOR 25V 0.1U	2	
C5634	ECA1HXS100	E.CAPACITOR 50V 10U	1	
C5635	ECUM1H561JCN	C.CAPACITOR CH 50V 560P	1	
C5636-42	ECUM1E104ZFN	E.CAPACITOR 25V 0.1U	7	
C5643	ECUM1E153KBN	C.CAPACITOR CH 25V 0.015U	1	
C5644-58	ECUM1E104ZFN	E.CAPACITOR 25V 0.1U	15	
CN5001	VJP1230R	CONNECTOR (MALE)	1	

Ref.No.	Part No.	Part Name & Description	Pcs	Remarks
CN5002	VJP1230G	CONNECTOR (MALE)	1	
D5301	FC54M-5	DIODE	1	
D5302	MA157	DIODE	1	
D5401	MA151K	DIODE	1	
D5600	MA151K	DIODE	1	
D5601	MA3030	DIODE	1	
D5602-05	MA151K	DIODE	4	
D5606	MA3030	DIODE	1	
D5607-09	MA151K	DIODE	3	
DL5001	VLD0221	DELAY	1	
DL5002,03	VLD0222	DELAY	2	
FL5001-04	VLF0931	FILTER	4	
IC5001,02	UPC1663G	IC	2	
IC5003	MC1495L	IC	1	
IC5004	UPC1663G	IC	1	
IC5005-07	MC1495L	IC	3	
IC5008,09	UPC1663G	IC	2	
IC5010	AD96685BQ	IC	1	
IC5011	UPC1663G	IC	1	
IC5300,01	MC10H116L	IC	2	
IC5302	MC10H107L	IC	1	
IC5303	MB813AZ	IC	1	
IC5304	MC10H116L	IC	1	
IC5306	UPC78L08J	IC	1	
IC5307	UPC79L08J	IC	1	
IC5308	TL082CPS	IC	1	
IC5309	LM337T	IC	1	
IC5400	MC74HC04AF	IC	1	
IC5402	MC14053BF	IC	1	
IC5500	UPC1663G	IC	1	
IC5501	NJM1496M	IC	1	
IC5502	TL082CPS	IC	1	
IC5503	NJM360M	IC	1	
IC5600	TL082CPS	IC	1	
IC5601	NJM1496M	IC	1	
IC5602	TL084CNS	IC	1	
IC5603	NJM1496M	IC	1	
IC5604	TL084CNS	IC	1	
IC5605	MC14053BF	IC	1	
L301	VLQ0188MR56N	COIL 0.56UH	1	
L5001,02	VLQEL06F100J	COIL 10UH	2	
L5003	VLQ0171K4R7N	COIL 4.7UH	1	
L5004,05	VLQEL06F100J	COIL 10UH	2	
L5006,07	VLQ0171K4R7N	COIL 4.7UH	2	
L5008	VLQ0171M2R2N	COIL 2.2UH	1	
L5009,10	VLQEL06F100J	COIL 10UH	2	
L5011	VLQ0171K4R7N	COIL 4.7UH	1	
L5012-14	VLQ0171M1R8N	COIL 1.8UH	3	
L5300	VLQEL06F100J	COIL 10UH	1	
L5500,01	VLQ0188KR39N	COIL 0.39UH	2	
L5600,01	VLQEL06F100J	COIL 10UH	2	
P201,02	VJP3151	CONNECTOR (MALE)	2	
Q309,10	2SK198-P	TRANSISTOR	2	
Q5001-04	XN6537	TRANSISTOR	4	

Ref.No.	Part No.	Part Name & Description	Pcs	Remarks
Q5005	XN5531	TRANSISTOR	1	
Q5006,07	2SA1738	TRANSISTOR	2	
Q5008	XN5531	TRANSISTOR	1	
Q5009-11	2SC3130	TRANSISTOR	3	
Q5012-16	2SC2480-S	TRANSISTOR	5	
Q5017-19	2SA1022-C	TRANSISTOR	3	
Q5020,21	2SC3130	TRANSISTOR	2	
Q5022,23	2SD1938-T	TRANSISTOR	2	
Q5300	XN5531	TRANSISTOR	1	
Q5301	2SC2295-C	TRANSISTOR	1	
Q5302,03	XN6543	TRANSISTOR	2	
Q5304	2SC2295-C	TRANSISTOR	1	
Q5305	2SA1022-C	TRANSISTOR	1	
Q5306	2SC2295-C	TRANSISTOR	1	
Q5307	2SA1022-C	TRANSISTOR	1	
Q5308	2SC2295-C	TRANSISTOR	1	
Q5402	2SD601A-R	TRANSISTOR	1	
Q5403,04	2SD1938-T	TRANSISTOR	2	
Q5500-02	2SC3130	TRANSISTOR	3	
Q5503	2SC2295-C	TRANSISTOR	1	
Q5504	2SA1022-C	TRANSISTOR	1	
Q5600	XN5531	TRANSISTOR	1	
Q5601,02	2SC3130	TRANSISTOR	2	
Q5603	XN6435	TRANSISTOR	1	
Q5604	2SC3130	TRANSISTOR	1	
Q5605	XN5531	TRANSISTOR	1	
Q5606-08	2SC3130	TRANSISTOR	3	
Q5609	XN6435	TRANSISTOR	1	
Q5610,11	2SA1022-C	TRANSISTOR	2	
		RESISTORS		
R375	ERJ6GEYJ820	M.RESISTOR CH1/10W 82	1	
R5001,02	VRE0034E510	M.RESISTOR CH 1/10W 51	2	
R5003,04	ERJ6GEYJ182	M.RESISTOR CH1/10W 1.8K	2	
R5005	ERJ6GEYJ560	M.RESISTOR CH1/10W 56	1	
R5006,07	ERJ6GEYJ470	M.RESISTOR CH1/10W 47	2	
R5008,09	ERJ6GEYJ100	M.RESISTOR CH1/10W 10	2	
R5010,11	ERJ6GEYJ152	M.RESISTOR CH1/10W 1.5K	2	
R5012	ERJ6GEYJ101	M.RESISTOR CH1/10W 100	1	
R5013,14	ERJ6GEYJ470	M.RESISTOR CH1/10W 47	2	
R5015,16	ERJ6GEYG151	M.RESISTOR CH1/10W 150	2	
R5017	ERJ6GEYJ102	M.RESISTOR CH1/10W 1K	1	
R5018	ERJ6GEYJ221	M.RESISTOR CH1/10W 220	1	
R5019	ERJ6GEYJ470	M.RESISTOR CH1/10W 47	1	
R5020,21	VRE0034E510	M.RESISTOR CH 1/10W 51	2	
R5022	ERJ6GEYJ182	M.RESISTOR CH1/10W 1.8K	1	
R5023	ERJ6GEYJ152	M.RESISTOR CH1/10W 1.5K	1	
R5024	ERJ6GEYJ560	M.RESISTOR CH1/10W 56	1	
R5025,26	ERJ6GEYJ470	M.RESISTOR CH1/10W 47	2	
R5027,28	ERJ6GEYJ100	M.RESISTOR CH1/10W 10	2	
R5029,30	ERJ6GEYJ152	M.RESISTOR CH1/10W 1.5K	2	
R5031	ERJ6GEYJ101	M.RESISTOR CH1/10W 100	1	
R5032,33	ERJ6GEYJ470	M.RESISTOR CH1/10W 47	2	
R5034	ERJ6GEYJ682	M.RESISTOR CH1/10W 6.8K	1	
R5035	ERJ6GEYJ272	M.RESISTOR CH1/10W 2.7K	1	
R5036	ERJ6GEYG151	M.RESISTOR CH1/10W 150	1	
R5037	ERJ6GEYJ272	M.RESISTOR CH1/10W 2.7K	1	
R5038	ERJ6GEYJ682	M.RESISTOR CH1/10W 6.8K	1	
R5039,40	ERJ6GEYJ273	M.RESISTOR CH1/10W 27K	2	
R5041,42	ERJ6GEYJ560	M.RESISTOR CH1/10W 56	2	
R5043,44	ERJ6GEYJ122	M.RESISTOR CH1/10W 1.2K	2	
R5045	ERJ6GEYJ101	M.RESISTOR CH1/10W 100	1	
R5046	ERJ6GEYJ470	M.RESISTOR CH1/10W 47	1	
R5047	ERJ6GEYJ560	M.RESISTOR CH1/10W 56	1	
R5048	ERJ6GEYJ681	M.RESISTOR CH1/10W 680	1	
R5049,50	ERJ6GEYJ470	M.RESISTOR CH1/10W 47	2	
R5051	ERJ6GEYJ101	M.RESISTOR CH1/10W 100	1	
R5052	ERJ6GEYJ331	M.RESISTOR CH1/10W 330	1	
R5053	ERJ6GEYJ470	M.RESISTOR CH1/10W 47	1	
R5054	ERJ6GEYF472	M.RESISTOR CH1/10W 4.7K	1	
R5055,56	ERJ6GEYJ471	M.RESISTOR CH1/10W 470	2	
R5057	ERJ6GEYJ331	M.RESISTOR CH1/10W 330	1	
R5058	ERJ6GEYJ101	M.RESISTOR CH1/10W 100	1	

Ref.No.	Part No.	Part Name & Description	Pcs	Remarks
R5059,60	ERJ6GEYJ331	M.RESISTOR CH1/10W 330	2	
R5061,62	ERJ6GEYJ103	M.RESISTOR CH1/10W 10K	2	
R5063	ERJ6GEYJ470	M.RESISTOR CH1/10W 47	1	
R5064	ERJ6GEYJ560	M.RESISTOR CH1/10W 56	1	
R5065	ERJ6GEYJ561	M.RESISTOR CH1/10W 560	1	
R5066,67	VRE0034E510	M.RESISTOR CH 1/10W 51	2	
R5068	ERJ6GEYJ560	M.RESISTOR CH1/10W 56	1	
R5069	ERJ6GEYJ102	M.RESISTOR CH1/10W 1K	1	
R5070	ERJ6GEYF472	M.RESISTOR CH1/10W 4.7K	1	
R5071	ERJ6GEYJ470	M.RESISTOR CH1/10W 47	1	
R5072	ERJ6GEYJ101	M.RESISTOR CH1/10W 100	1	
R5074	ERJ6GEYJ101	M.RESISTOR CH1/10W 100	1	
R5075	ERJ6GEYF472	M.RESISTOR CH1/10W 4.7K	1	
R5076	ERJ6GEYJ390	M.RESISTOR CH1/10W 39	1	
R5077	ERJ6GEYF472	M.RESISTOR CH1/10W 4.7K	1	
R5078	ERJ6GEYJ390	M.RESISTOR CH1/10W 39	1	
R5079	ERJ6GEYG151	M.RESISTOR CH1/10W 150	1	
R5080	ERJ6GEYJ391	M.RESISTOR CH1/10W 390	1	
R5081,82	ERJ6GEYJ471	M.RESISTOR CH1/10W 470	2	
R5083	ERJ8GCYJ221	M.RESISTOR CH 1/8W 220	1	
R5084	ERJ6GEYF472	M.RESISTOR CH1/10W 4.7K	1	
R5085	ERJ6GEYJ390	M.RESISTOR CH1/10W 39	1	
R5086	ERJ8GCYJ221	M.RESISTOR CH 1/8W 220	1	
R5087	ERJ6GEYF472	M.RESISTOR CH1/10W 4.7K	1	
R5088	ERJ6GEYJ390	M.RESISTOR CH1/10W 39	1	
R5089	ERJ6GEYJ101	M.RESISTOR CH1/10W 100	1	
R5090	ERJ6GEYJ390	M.RESISTOR CH1/10W 39	1	
R5091	ERJ6GEYJ102	M.RESISTOR CH1/10W 1K	1	
R5092	ERJ6GEYJ392	M.RESISTOR CH1/10W 3.9K	1	
R5093	ERJ6GEYJ101	M.RESISTOR CH1/10W 100	1	
R5094	ERJ6GEYJ331	M.RESISTOR CH1/10W 330	1	
R5095	ERJ6GEYJ392	M.RESISTOR CH1/10W 3.9K	1	
R5096,97	ERJ6GEYJ121	M.RESISTOR CH1/10W 120	2	
R5098,99	ERJ6GEYF472	M.RESISTOR CH1/10W 4.7K	2	
R5100,01	ERJ6GEYJ390	M.RESISTOR CH1/10W 39	2	
R5102	ERJ6GEYG151	M.RESISTOR CH1/10W 150	1	
R5103	ERJ6GEYJ391	M.RESISTOR CH1/10W 390	1	
R5104,05	ERJ6GEYJ471	M.RESISTOR CH1/10W 470	2	
R5106	ERJ8GCYJ221	M.RESISTOR CH 1/8W 220	1	
R5108	ERJ6GEYJ470	M.RESISTOR CH1/10W 47	1	
R5109	ERJ8GCYJ221	M.RESISTOR CH 1/8W 220	1	
R5110	ERJ6GEYF472	M.RESISTOR CH1/10W 4.7K	1	
R5111	ERJ6GEYJ470	M.RESISTOR CH1/10W 47	1	
R5113,14	ERJ6GEYJ101	M.RESISTOR CH1/10W 100	2	
R5115	ERJ6GEYJ222	M.RESISTOR CH1/10W 2.2K	1	
R5116	ERJ6GEYJ392	M.RESISTOR CH1/10W 3.9K	1	
R5117	ERJ6GEYJ101	M.RESISTOR CH1/10W 100	1	
R5118	ERJ6GEYJ222	M.RESISTOR CH1/10W 2.2K	1	
R5119	ERJ6GEYJ101	M.RESISTOR CH1/10W 100	1	
R5120	ERJ6GEYJ222	M.RESISTOR CH1/10W 2.2K	1	
R5121	ERJ6GEYJ101	M.RESISTOR CH1/10W 100	1	
R5122	ERJ6GEYJ222	M.RESISTOR CH1/10W 2.2K	1	
R5123	ERJ6GEYJ101	M.RESISTOR CH1/10W 100	1	
R5124	ERJ6GEYJ332	M.RESISTOR CH1/10W 3.3K	1	
R5125	ERJ6GEYJ222	M.RESISTOR CH1/10W 2.2K	1	
R5126,27	ERJ6GEYJ390	M.RESISTOR CH1/10W 39	2	
R5128	ERJ6GEYJ101	M.RESISTOR CH1/10W 100	1	
R5129	ERJ6GEYJ122	M.RESISTOR CH1/10W 1.2K	1	
R5130	ERJ6GEYJ102	M.RESISTOR CH1/10W 1K	1	
R5131	ERJ6GEYJ392	M.RESISTOR CH1/10W 3.9K	1	
R5132	ERJ6GEYJ102	M.RESISTOR CH1/10W 1K	1	
R5133	ERJ6GEYJ331	M.RESISTOR CH1/10W 330	1	
R5134	ERJ6GEYJ392	M.RESISTOR CH1/10W 3.9K	1	
R5135,36	ERJ6GEYJ390	M.RESISTOR CH1/10W 39	2	
R5137	ERJ6GEYJ101	M.RESISTOR CH1/10W 100	1	
R5138	ERJ6GEYJ390	M.RESISTOR CH1/10W 39	1	
R5139	ERJ6GEYJ102	M.RESISTOR CH1/10W 1K	1	
R5140	ERJ6GEYJ392	M.RESISTOR CH1/10W 3.9K	1	
R5141	ERJ6GEYJ102	M.RESISTOR CH1/10W 1K	1	
R5142	ERJ6GEYG151	M.RESISTOR CH1/10W 150	1	
R5143	ERJ6GEYJ392	M.RESISTOR CH1/10W 3.9K	1	
R5144,45	ERJ6GEYJ390	M.RESISTOR CH1/10W 39	2	
R5146	ERJ6GEYF333	M.RESISTOR CH1/10W 33K	1	
R5147	ERJ6GEYJ392	M.RESISTOR CH1/10W 3.9K	1	
R5148	ERJ6GEYJ390	M.RESISTOR CH1/10W 39	1	

Ref.No.	Part No.	Part Name & Description	Pcs	Remarks
R5149	ERJ6GEYJ471	M.RESISTOR CH1/10W 470	1	
R5150	ERJ6GEYJ392	M.RESISTOR CH1/10W 3.9K	1	
R5151	ERJ6GEYJ102	M.RESISTOR CH1/10W 1K	1	
R5152	ERJ6GEYJ331	M.RESISTOR CH1/10W 330	1	
R5153	ERJ6GEYJ392	M.RESISTOR CH1/10W 3.9K	1	
R5155,56	ERJ6GEYG181	M.RESISTOR CH1/10W 180	2	
R5157,58	ERJ6GEYJ392	M.RESISTOR CH1/10W 3.9K	2	
R5159,60	ERJ6GEYJ390	M.RESISTOR CH1/10W 39	2	
R5161	ERJ6GEYG151	M.RESISTOR CH1/10W 150	1	
R5162	ERJ6GEYJ391	M.RESISTOR CH1/10W 390	1	
R5163,64	ERJ6GEYJ471	M.RESISTOR CH1/10W 470	2	
R5165	ERJ8GCYJ221	M.RESISTOR CH 1/8W 220	1	
R5166	ERJ6GEYJ470	M.RESISTOR CH1/10W 47	1	
R5168	ERJ8GCYJ221	M.RESISTOR CH 1/8W 220	1	
R5169	ERJ6GEYF472	M.RESISTOR CH1/10W 4.7K	1	
R5170	ERJ6GEYJ470	M.RESISTOR CH1/10W 47	1	
R5172	ERJ6GEYJ470	M.RESISTOR CH1/10W 47	1	
R5173,74	ERJ6GEYJ471	M.RESISTOR CH1/10W 470	2	
R5175,76	ERJ8GCYJ331	M.RESISTOR CH 1/8W 330	2	
R5177-80	ERJ6GEYF472	M.RESISTOR CH1/10W 4.7K	4	
R5181,82	ERJ8GCYJ221	M.RESISTOR CH 1/8W 220	2	
R5183,84	VRE0034E510	M.RESISTOR CH 1/10W 51	2	
R5185	ERJ6GEYJ560	M.RESISTOR CH1/10W 56	1	
R5186	ERJ6GEYJ122	M.RESISTOR CH1/10W 1.2K	1	
R5187	ERJ6GEYJ101	M.RESISTOR CH1/10W 100	1	
R5188	ERJ6GEYJ471	M.RESISTOR CH1/10W 470	1	
R5189	ERJ6GEYJ101	M.RESISTOR CH1/10W 100	1	
R5190	ERJ6GEYF472	M.RESISTOR CH1/10W 4.7K	1	
R5191	ERJ6GEYJ470	M.RESISTOR CH1/10W 47	1	
R5192	ERJ6GEYJ471	M.RESISTOR CH1/10W 470	1	
R5193	ERJ6GEYJ101	M.RESISTOR CH1/10W 100	1	
R5194	ERJ6GEYJ470	M.RESISTOR CH1/10W 47	1	
R5195	ERJ6GEYJ101	M.RESISTOR CH1/10W 100	1	
R5196	ERJ6GEYJ470	M.RESISTOR CH1/10W 47	1	
R5197,98	ERJ8GCYJ221	M.RESISTOR CH 1/8W 220	2	
R5199	ERJ6GEYF472	M.RESISTOR CH1/10W 4.7K	1	
R5200	VRE0034E750	M.RESISTOR CH 1/10W 75	1	
R5201	ERJ6GEYJ101	M.RESISTOR CH1/10W 100	1	
R5202	ERJ6GEYJ102	M.RESISTOR CH1/10W 1K	1	
R5203	ERJ6GEYJ101	M.RESISTOR CH1/10W 100	1	
R5204	ERJ6GEYJ102	M.RESISTOR CH1/10W 1K	1	
R5205,06	ERJ6GEYG680	M.RESISTOR CH1/10W 68	2	
R5207	ERJ6GEYJ470	M.RESISTOR CH1/10W 47	1	
R5208	ERJ6GEYJ221	M.RESISTOR CH1/10W 220	1	
R5209,10	ERJ6GEYG151	M.RESISTOR CH1/10W 150	2	
R5211	ERJ6GEYJ102	M.RESISTOR CH1/10W 1K	1	
R5212	ERJ6GEYJ101	M.RESISTOR CH1/10W 100	1	
R5213	ERJ6GEYJ682	M.RESISTOR CH1/10W 6.8K	1	
R5214,15	ERJ6GEYJ390	M.RESISTOR CH1/10W 39	2	
R5216-22	ERJ6GEY0R00	M.RESISTOR CH 1/10W 0	7	
R5223	ERJ6GEYJ470	M.RESISTOR CH1/10W 47	1	
R5224,25	ERJ6GEY0R00	M.RESISTOR CH 1/10W 0	2	
R5226	ERJ6GEYJ150	M.RESISTOR CH1/10W 15	1	
R5227	ERJ6GEYJ470	M.RESISTOR CH1/10W 47	1	
R5300-02	ERJ6GEYJ101	M.RESISTOR CH1/10W 100	3	
R5303,04	ERJ6GEYJ391	M.RESISTOR CH1/10W 390	2	
R5305-09	ERJ6GEYJ101	M.RESISTOR CH1/10W 100	5	
R5310,11	ERJ6GEYJ330	M.RESISTOR CH1/10W 33	2	
R5312,13	ERJ6GEYJ561	M.RESISTOR CH1/10W 560	2	
R5314,15	ERJ6GEYJ330	M.RESISTOR CH1/10W 33	2	
R5318,19	VRE0034E101	M.RESISTOR CH 1/10W 100	2	
R5320,21	ERJ6GEYF472	M.RESISTOR CH1/10W 4.7K	2	
R5322	ERJ6GEYJ102	M.RESISTOR CH1/10W 1K	1	
R5323	VRE0034E510	M.RESISTOR CH 1/10W 51	1	
R5324	VRE0034E101	M.RESISTOR CH 1/10W 100	1	
R5325	VRE0034E510	M.RESISTOR CH 1/10W 51	1	
R5326	VRE0034E101	M.RESISTOR CH 1/10W 100	1	
R5327	ERJ6GEYG181	M.RESISTOR CH1/10W 180	1	
R5329	ERJ6GEYJ271	M.RESISTOR CH1/10W 270	1	
R5331,32	ERJ6GEYJ101	M.RESISTOR CH1/10W 100	2	
R5335-42	ERJ6GEYJ101	M.RESISTOR CH1/10W 100	8	
R5343,44	ERJ6GEYJ331	M.RESISTOR CH1/10W 330	2	
R5345,46	VRE0034E510	M.RESISTOR CH 1/10W 51	2	
R5347,48	ERJ6GEYJ331	M.RESISTOR CH1/10W 330	2	
R5349,50	VRE0034E510	M.RESISTOR CH 1/10W 51	2	

Ref.No.	Part No.	Part Name & Description	Pcs	Remarks
R5351	ERJ6GEYJ101	M.RESISTOR CH1/10W 100	1	
R5352	ERJ6GEYJ562	M.RESISTOR CH1/10W 5.6K	1	
R5353	VRE0034E512	M.RESISTOR CH 1/10W 5.1K	1	
R5354	ERJ6GEYJ821	M.RESISTOR CH1/10W 820	1	
R5355	ERJ6GEYJ562	M.RESISTOR CH1/10W 5.6K	1	
R5356,57	ERJ6GEYJ103	M.RESISTOR CH1/10W 10K	2	
R5358	ERJ6GEYJ101	M.RESISTOR CH1/10W 100	1	
R5359	ERJ6GEYJ223	M.RESISTOR CH1/10W 22K	1	
R5360	ERG2SJ220	M.RESISTOR 2W 22	1	
R5361	ERJ6GEYJ121	M.RESISTOR CH1/10W 120	1	
R5362	ERJ6GEYJ820	M.RESISTOR CH1/10W 82	1	
R5363	ERJ6GEYJ221	M.RESISTOR CH1/10W 220	1	
R5364,65	VRE0034E750	M.RESISTOR CH 1/10W 75	2	
R5366	ERJ6GEYJ102	M.RESISTOR CH1/10W 1K	1	
R5368	ERJ6GEYJ101	M.RESISTOR CH1/10W 100	1	
R5369	ERJ6GEY0R00	M.RESISTOR CH 1/10W 0	1	
R5372,73	ERJ6GEYJ101	M.RESISTOR CH1/10W 100	2	
R5374	ERJ6GEYJ330	M.RESISTOR CH1/10W 33	1	
R5400	ERJ6GEYF472	M.RESISTOR CH1/10W 4.7K	1	
R5401-03	ERJ6GEYJ103	M.RESISTOR CH1/10W 10K	3	
R5411	ERJ6GEYJ101	M.RESISTOR CH1/10W 100	1	
R5412,13	ERJ6GEYF472	M.RESISTOR CH1/10W 4.7K	2	
R5414,15	ERJ6GEYJ103	M.RESISTOR CH1/10W 10K	2	
R5416	ERJ6GEYJ183	M.RESISTOR CH1/10W 18K	1	
R5500	ERJ6GEYJ101	M.RESISTOR CH1/10W 100	1	
R5501	ERJ6GEYJ560	M.RESISTOR CH1/10W 56	1	
R5502	ERJ6GEYJ561	M.RESISTOR CH1/10W 560	1	
R5503,04	VRE0034E750	M.RESISTOR CH 1/10W 75	2	
R5505,06	ERJ6GEYJ470	M.RESISTOR CH1/10W 47	2	
R5508,09	ERJ6GEYJ331	M.RESISTOR CH1/10W 330	2	
R5510,11	ERJ6GEYJ102	M.RESISTOR CH1/10W 1K	2	
R5512-14	ERJ6GEYJ560	M.RESISTOR CH1/10W 56	3	
R5515,16	ERJ6GEYJ562	M.RESISTOR CH1/10W 5.6K	2	
R5517-21	ERJ6GEYJ102	M.RESISTOR CH1/10W 1K	5	
R5522	ERJ6GEYJ821	M.RESISTOR CH1/10W 820	1	
R5523-26	ERJ6GEYJ560	M.RESISTOR CH1/10W 56	4	
R5527	ERJ6GEYJ822	M.RESISTOR CH1/10W 8.2K	1	
R5528	ERJ6GEYJ392	M.RESISTOR CH1/10W 3.9K	1	
R5530	ERJ6GEYJ392	M.RESISTOR CH1/10W 3.9K	1	
R5531	ERJ6GEYJ562	M.RESISTOR CH1/10W 5.6K	1	
R5532,33	ERJ6GEYJ102	M.RESISTOR CH1/10W 1K	2	
R5534-37	ERJ6GEYJ103	M.RESISTOR CH1/10W 10K	4	
R5538	ERJ6GEYJ101	M.RESISTOR CH1/10W 100	1	
R5539	ERJ6GEYJ821	M.RESISTOR CH1/10W 820	1	
R5540	ERJ6GEYJ123	M.RESISTOR CH1/10W 12K	1	
R5541	VRE0034E750	M.RESISTOR CH 1/10W 75	1	
R5542	ERJ6GEYJ122	M.RESISTOR CH1/10W 1.2K	1	
R5543	ERJ6GEY0R00	M.RESISTOR CH 1/10W 0	1	
R5544	ERJ6GEYJ101	M.RESISTOR CH1/10W 100	1	
R5545	ERJ6GEYJ392	M.RESISTOR CH1/10W 3.9K	1	
R5547	ERJ6GEYJ222	M.RESISTOR CH1/10W 2.2K	1	
R5548	ERJ6GEYJ101	M.RESISTOR CH1/10W 100	1	
R5600,01	ERJ6GEYJ103	M.RESISTOR CH1/10W 10K	2	
R5602-04	ERJ6GEYJ562	M.RESISTOR CH1/10W 5.6K	3	
R5605	ERJ6GEYJ101	M.RESISTOR CH1/10W 100	1	
R5606,07	ERJ6GEYJ561	M.RESISTOR CH1/10W 560	2	
R5608,09	ERJ6GEYJ560	M.RESISTOR CH1/10W 56	2	
R5610	ERDS2TJ102	C.RESISTOR 1/4W 1K	1	
R5611	ERDS2TJ101	C.RESISTOR 1/4W 100	1	
R5612	ERJ6GEYJ101	M.RESISTOR CH1/10W 100	1	
R5613	ERDS2TJ222	C.RESISTOR 1/4W 2.2K	1	
R5614-17	ERJ6GEYJ101	M.RESISTOR CH1/10W 100	4	
R5618	ERDS2TJ152	C.RESISTOR 1/4W 1.5K	1	
R5619	ERJ6GEYG151	M.RESISTOR CH1/10W 150	1	
R5620,21	ERJ6GEYJ470	M.RESISTOR CH1/10W 47	2	
R5622,23	ERJ6GEYJ102	M.RESISTOR CH1/10W 1K	2	
R5624	ERJ6GEYG151	M.RESISTOR CH1/10W 150	1	
R5625,26	ERJ6GEYJ102	M.RESISTOR CH1/10W 1K	2	
R5627	ERJ6GEYJ471	M.RESISTOR CH1/10W 470	1	
R5628	ERJ6GEYJ223	M.RESISTOR CH1/10W 22K	1	
R5629	ERJ6GEYJ331	M.RESISTOR CH1/10W 330	1	
R5630,31	ERJ6GEYJ471	M.RESISTOR CH1/10W 470	2	
R5632,33	ERJ6GEYJ562	M.RESISTOR CH1/10W 5.6K	2	
R5634-37	ERJ6GEYJ103	M.RESISTOR CH1/10W 10K	4	
R5638	ERJ6GEYJ102	M.RESISTOR CH1/10W 1K	1	

Ref.No.	Part No.	Part Name & Description	Pcs	Remarks
R5639	ERJ6GEYJ682	M.RESISTOR CH1/10W 6.8K	1	
R5640	ERJ6GEYJ123	M.RESISTOR CH1/10W 12K	1	
R5641,42	ERJ6GEYJ102	M.RESISTOR CH1/10W 1K	2	
R5643,44	ERJ6GEYJ330	M.RESISTOR CH1/10W 33	2	
R5645	ERJ6GEYJ390	M.RESISTOR CH1/10W 39	1	
R5646-49	ERJ6GEYJ101	M.RESISTOR CH1/10W 100	4	
R5650,51	ERJ6GEYJ103	M.RESISTOR CH1/10W 10K	2	
R5652-54	ERJ6GEYJ562	M.RESISTOR CH1/10W 5.6K	3	
R5655	ERJ6GEYJ101	M.RESISTOR CH1/10W 100	1	
R5656,57	ERJ6GEYJ561	M.RESISTOR CH1/10W 560	2	
R5658,59	ERJ6GEYJ560	M.RESISTOR CH1/10W 56	2	
R5670	ERDS2TJ102	C.RESISTOR 1/4W 1K	1	
R5671	ERDS2TJ101	C.RESISTOR 1/4W 100	1	
R5672	ERJ6GEYJ101	M.RESISTOR CH1/10W 100	1	
R5673	ERDS2TJ222	C.RESISTOR 1/4W 2.2K	1	
R5674,75	ERJ6GEYJ101	M.RESISTOR CH1/10W 100	2	
R5677,78	ERJ6GEYJ101	M.RESISTOR CH1/10W 100	2	
R5679	ERDS2TJ152	C.RESISTOR 1/4W 1.5K	1	
R5680	ERJ6GEYJ101	M.RESISTOR CH1/10W 100	1	
R5681,82	ERJ6GEYJ102	M.RESISTOR CH1/10W 1K	2	
R5683,84	ERJ6GEYJ470	M.RESISTOR CH1/10W 47	2	
R5685	ERJ6GEYJ471	M.RESISTOR CH1/10W 470	1	
R5686	ERJ6GEYJ223	M.RESISTOR CH1/10W 22K	1	
R5687,88	ERJ6GEYJ471	M.RESISTOR CH1/10W 470	2	
R5689	ERJ6GEYJ331	M.RESISTOR CH1/10W 330	1	
R5690,91	ERJ6GEYJ562	M.RESISTOR CH1/10W 5.6K	2	
R5692-97	ERJ6GEYJ103	M.RESISTOR CH1/10W 10K	6	
R5698	ERJ6GEYJ102	M.RESISTOR CH1/10W 1K	1	
R5699	ERJ6GEYJ682	M.RESISTOR CH1/10W 6.8K	1	
R5700	ERJ6GEYJ123	M.RESISTOR CH1/10W 12K	1	
R5701-04	ERJ6GEYJ102	M.RESISTOR CH1/10W 1K	4	
R5705	ERJ6GEYJ471	M.RESISTOR CH1/10W 470	1	
R5706	ERJ6GEYJ100	M.RESISTOR CH1/10W 10	1	
R5707,08	ERJ6GEYJ101	M.RESISTOR CH1/10W 100	2	
R5709,10	ERJ6GEYJ560	M.RESISTOR CH1/10W 56	2	
R5711,12	ERJ6GEYF472	M.RESISTOR CH1/10W 4.7K	2	
R5713-18	ERJ6GEYJ100	M.RESISTOR CH1/10W 10	6	
R5721,22	ERJ6GEYJ100	M.RESISTOR CH1/10W 10	2	
R5723	ERJ6GEY0R00	M.RESISTOR CH 1/10W 0	1	
RY5002	VSY2069	RELAY	1	
SW5001-03	VJP1990	CONNECTOR (MALE)	3	
SW5400,01	VJP2536A003	CONNECTOR (MALE)	2	
SW5600,01	VJP2536A003	CONNECTOR (MALE)	2	
SW5001S	VJS1990	CONNECTOR (FEMALE)	1	
SW5002S	VJS1990	CONNECTOR (FEMALE)	1	
SW5003S	VJS1990	CONNECTOR (FEMALE)	1	
SW5400S	VJS1990	CONNECTOR (FEMALE)	1	
SW5401S	VJS1990	CONNECTOR (FEMALE)	1	
SW5600S	VJS1990	CONNECTOR (FEMALE)	1	
SW5601S	VJS1990	CONNECTOR (FEMALE)	1	
TP5001-05	VJR0646	TEST POINT	5	
TP5007-09	VJR0646	TEST POINT	3	
TP5300-04	VJR0646	TEST POINT	5	
TP5400-04	VJR0646	TEST POINT	5	
TP5501,02	VJR0646	TEST POINT	2	
TP5600-04	VJR0646	TEST POINT	5	
TPG5001-05	VJR0646	TEST POINT	5	
TPG5300	VJR0646	TEST POINT	1	
TPG5600	VJR0646	TEST POINT	1	
VC5001,02	ECV1ZW20X53T	E.CAPACITOR 50V 20P	2	
VC5301	ECV1ZW20X53T	E.CAPACITOR 50V 20P	1	

S2

S2 EQUALIZER CH1 VEP85021D
S2 SUB VEP87002A

Ref.No.	Part No.	Part Name & Description	Pcs	Remarks
VL5001	EIV7EL062B	COIL	1	
VL5002	EIV7EL063B	COIL	1	
VL5003	EIV7EL065B	COIL	1	
VL5004	EIV7EL068B	COIL	1	
VL5005	EIV7EL073B	COIL	1	
VL5006	EIV7EL072B	COIL	1	
VL5300	VLQ0502	COIL	1	
VR5001	VRV0064B501	V.RESISTOR 500	1	
VR5002	VRV0064B202	V.RESISTOR 2K	1	
VR5003	VRV0109B501	V.RESISTOR 500	1	
VR5004	VRV0109B201	V.RESISTOR 200	1	
VR5005,06	VRV0109B101	V.RESISTOR 100	2	
VR5008,09	VRV0109B101	V.RESISTOR 100	2	
VR5010	VRV0064B202	V.RESISTOR 2K	1	
VR5011,12	VRV0109B101	V.RESISTOR 100	2	
VR5300	VRV0109B102	V.RESISTOR 1K	1	
VR5301	VRV0109B101	V.RESISTOR 100	1	
VR5302	VRV0113B103	V.RESISTOR 10K	1	
VR5500	VRV0109B202	V.RESISTOR 2K	1	
VR5501	VRV0109B502	V.RESISTOR 5K	1	
VR5502	VRV0109B202	V.RESISTOR 2K	1	
VR5600	VRV0109B502	V.RESISTOR 5K	1	
VR5601	VRV0109B103	V.RESISTOR 10K	1	
VR5602	VRV0109B502	V.RESISTOR 5K	1	
VR5603	VRV0109B103	V.RESISTOR 10K	1	
VR5604	VRV0109B502	V.RESISTOR 5K	1	
VR5605	VRV0109B103	V.RESISTOR 10K	1	
VR5606	VRV0109B502	V.RESISTOR 5K	1	
VR5607	VRV0109B103	V.RESISTOR 10K	1	
VR5608-13	VRV0064B202	V.RESISTOR 2K	6	
VR5614,15	VRV0109B502	V.RESISTOR 5K	2	
		MISCELLANEOUS		
	VGQ0291	P.C.BOARD NAME PLATE	1	
	VJF0300	BINDER	1	
	VJF0817	CLAMPER	1	
	VML2143	CARD PULLER	1	
	VML2144	CARD PULLER	1	
	VSC3316	SHIELD CASE	1	
	VSC3317	SHIELD CASE	1	
	VXA4420	P.C.BOARD SHIELD PLATE	1	
	XNG26E	NUT	4	
	XTV3+6FFR	SCREW	5	
	XYN26+C12	SCREW	4	
	VMS2875	POST	3	
	VEP85021D	P.C.BOARD W/COMPONENT		
		S2 EQUALIZER CH1		
	VEP87002A	P.C.BOARD W/COMPONENT		FOR VEP85021D
		S2 SUB		
		CAPACITORS		
C347	ECUM1H220JCN	C.CAPACITOR CH 50V 22P	1	
C350,51	ECUM1E104ZFN	E.CAPACITOR 25V 0.1U	2	
C5001	ECUM1E104ZFN	E.CAPACITOR 25V 0.1U	1	
C5002	ECEA1CGE471	E.CAPACITOR 16V 470U	1	
C5003,04	ECUM1E104ZFN	E.CAPACITOR 25V 0.1U	2	
C5005	ECEA1CGE471	E.CAPACITOR 16V 470U	1	
C5006,07	ECUM1E104ZFN	E.CAPACITOR 25V 0.1U	2	
C5008	ECEA1CGE471	E.CAPACITOR 16V 470U	1	
C5009,10	ECUM1E104ZFN	E.CAPACITOR 25V 0.1U	2	

Ref.No.	Part No.	Part Name & Description	Pcs	Remarks
C5011	ECEA1CGE471	E.CAPACITOR 16V 470U	1	
C5012	ECUM1E104ZFN	E.CAPACITOR 25V 0.1U	1	
C5013,14	ECA1HXS2R2	E.CAPACITOR 50V 2.2U	2	
C5015	ECUM1E104ZFN	E.CAPACITOR 25V 0.1U	1	
C5016,17	ECUM1H561JCN	C.CAPACITOR CH 50V 560P	2	
C5018	ECUM1E104ZFN	E.CAPACITOR 25V 0.1U	1	
C5020	ECUM1E104ZFN	E.CAPACITOR 25V 0.1U	1	
C5021,22	ECA1HXS2R2	E.CAPACITOR 50V 2.2U	2	
C5023	ECUM1E104ZFN	E.CAPACITOR 25V 0.1U	1	
C5024,25	ECUM1H561JCN	C.CAPACITOR CH 50V 560P	2	
C5026	ECUM1E104ZFN	E.CAPACITOR 25V 0.1U	1	
C5028,29	ECUM1E104ZFN	E.CAPACITOR 25V 0.1U	2	
C5030,31	ECUM1H151JCN	C.CAPACITOR CH 50V 150P	2	
C5032-34	ECUM1E104ZFN	E.CAPACITOR 25V 0.1U	3	
C5035	ECUM1H180JCN	C.CAPACITOR CH 50V 18P	1	
C5036,37	ECUM1E104ZFN	E.CAPACITOR 25V 0.1U	2	
C5038	ECUM1H104KBM	C.CAPACITOR CH 50V 0.1U	1	
C5039-44	ECUM1E104ZFN	E.CAPACITOR 25V 0.1U	6	
C5045	ECUM1H104KBM	C.CAPACITOR CH 50V 0.1U	1	
C5046	VCM0058C018	C.CAPACITOR	1	
C5047	VCM0059F058	C.CAPACITOR	1	
C5048	VCM0059F076	C.CAPACITOR	1	
C5049	VCM0059F200	C.CAPACITOR	1	
C5050,51	ECUM1E104ZFN	E.CAPACITOR 25V 0.1U	2	
C5052	ECUM1H392KBN	C.CAPACITOR CH 50V 3900P	1	
C5053	ECUM1E104ZFN	E.CAPACITOR 25V 0.1U	1	
C5054	ECA1CXS470	E.CAPACITOR 16V 47U	1	
C5055	ECUM1E104ZFN	E.CAPACITOR 25V 0.1U	1	
C5056	ECA1CXS470	E.CAPACITOR 16V 47U	1	
C5057	ECUM1H104KBM	C.CAPACITOR CH 50V 0.1U	1	
C5058-60	ECUM1E104ZFN	E.CAPACITOR 25V 0.1U	3	
C5061,62	ECUM1H104KBM	C.CAPACITOR CH 50V 0.1U	2	
C5063	ECUM1H101JCN	C.CAPACITOR CH 50V 100P	1	
C5064,65	ECUM1E104ZFN	E.CAPACITOR 25V 0.1U	2	
C5066,67	ECUM1H104KBM	C.CAPACITOR CH 50V 0.1U	2	
C5068,69	ECUM1E104ZFN	E.CAPACITOR 25V 0.1U	2	
C5071	ECUM1H104KBM	C.CAPACITOR CH 50V 0.1U	1	
C5072,73	ECUM1E104ZFN	E.CAPACITOR 25V 0.1U	2	
C5074	ECUM1H104KBM	C.CAPACITOR CH 50V 0.1U	1	
C5075-82	ECUM1E104ZFN	E.CAPACITOR 25V 0.1U	8	
C5083	ECUM1H101JCN	C.CAPACITOR CH 50V 100P	1	
C5084	ECUM1E104ZFN	E.CAPACITOR 25V 0.1U	1	
C5085	ECUM1H101JCN	C.CAPACITOR CH 50V 100P	1	
C5086-89	ECUM1E104ZFN	E.CAPACITOR 25V 0.1U	4	
C5090,91	ECUM1H104KBM	C.CAPACITOR CH 50V 0.1U	2	
C5092,93	ECUM1E104ZFN	E.CAPACITOR 25V 0.1U	2	
C5095	ECUM1H104KBM	C.CAPACITOR CH 50V 0.1U	1	
C5096	ECUM1E104ZFN	E.CAPACITOR 25V 0.1U	1	
C5097	ECA1CXS470	E.CAPACITOR 16V 47U	1	
C5098	ECUM1E104ZFN	E.CAPACITOR 25V 0.1U	1	
C5099	ECA1CXS470	E.CAPACITOR 16V 47U	1	
C5100	VCM0058C027	C.CAPACITOR	1	
C5101	VCM0059F047	C.CAPACITOR	1	
C5102	VCM0059F110	C.CAPACITOR	1	
C5103	VCM0060F300	C.CAPACITOR	1	
C5104,05	ECUM1E104ZFN	E.CAPACITOR 25V 0.1U	2	
C5106,07	ECUM1H104KBM	C.CAPACITOR CH 50V 0.1U	2	
C5108-22	ECUM1E104ZFN	E.CAPACITOR 25V 0.1U	15	
C5123,24	ECA1HXS100	E.CAPACITOR 50V 10U	2	
C5125	ECUM1E104ZFN	E.CAPACITOR 25V 0.1U	1	
C5126	ECA1CXS470	E.CAPACITOR 16V 47U	1	
C5127	ECUM1E104ZFN	E.CAPACITOR 25V 0.1U	1	
C5128	ECA1CXS470	E.CAPACITOR 16V 47U	1	
C5129	ECA1HXS100	E.CAPACITOR 50V 10U	1	
C5130	ECUM1H104KBM	C.CAPACITOR CH 50V 0.1U	1	
C5132-34	ECUM1E104ZFN	E.CAPACITOR 25V 0.1U	3	
C5135,36	ECUM1H101JCN	C.CAPACITOR CH 50V 100P	2	
C5137-41	ECUM1E104ZFN	E.CAPACITOR 25V 0.1U	5	
C5143,44	ECUM1E104ZFN	E.CAPACITOR 25V 0.1U	2	
C5145	ECUM1H070DCN	C.CAPACITOR CH 50V 7P	1	
C5147	ECUM1H020CCN	C.CAPACITOR CH 50V 2P	1	
C5204	ECUM1H180JCN	C.CAPACITOR CH 50V 18P	1	
C5208	VCM0058F039	C.CAPACITOR	1	
C5209	ECUM1H391JCN	C.CAPACITOR CH 50V 390P	1	
C5210	ECUM1E104ZFN	E.CAPACITOR 25V 0.1U	1	

Ref.No.	Part No.	Part Name & Description	Pcs	Remarks
C5300-06	ECUM1E104ZFN	E.CAPACITOR 25V 0.1U	7	
C5307	ECUM1C104KBN	C.CAPACITOR CH 16V 0.1U	1	
C5308	ECA1CXS470	E.CAPACITOR 16V 47U	1	
C5309	ECUM1E104ZFN	E.CAPACITOR 25V 0.1U	1	
C5316,17	ECUM1E104ZFN	E.CAPACITOR 25V 0.1U	2	
C5318	ECA1CXS470	E.CAPACITOR 16V 47U	1	
C5319	ECUM1E104ZFN	E.CAPACITOR 25V 0.1U	1	
C5320	ECEA1CGE471	E.CAPACITOR 16V 470U	1	
C5321-32	ECUM1E104ZFN	E.CAPACITOR 25V 0.1U	12	
C5333	ECA1CXS470	E.CAPACITOR 16V 47U	1	
C5334-41	ECUM1E104ZFN	E.CAPACITOR 25V 0.1U	8	
C5342	ECUM1H020CCN	C.CAPACITOR CH 50V 2P	1	
C5343	ECUM1H102JN	C.CAPACITOR CH 50V 1000P	1	
C5344	ECA1HXS100	E.CAPACITOR 50V 10U	1	
C5345	ECUM1E104ZFN	E.CAPACITOR 25V 0.1U	1	
C5346	ECUM1H820JCN	C.CAPACITOR CH 50V 82P	1	
C5347	ECUM1H560JCN	C.CAPACITOR CH 50V 56P	1	
C5400	ECUM1E104ZFN	E.CAPACITOR 25V 0.1U	1	
C5405	ECUM1E104ZFN	E.CAPACITOR 25V 0.1U	1	
C5500-02	ECUM1E104ZFN	E.CAPACITOR 25V 0.1U	3	
C5503,04	ECUM1H151JCN	C.CAPACITOR CH 50V 150P	2	
C5505-18	ECUM1E104ZFN	E.CAPACITOR 25V 0.1U	14	
C5519	ECUM1H102JN	C.CAPACITOR CH 50V 1000P	1	
C5520-26	ECUM1E104ZFN	E.CAPACITOR 25V 0.1U	7	
C5528	ECUM1H104ZFN	C.CAPACITOR CH 50V 0.1U	1	
C5600-06	ECUM1E104ZFN	E.CAPACITOR 25V 0.1U	7	
C5607	ECUM1H331JCN	C.CAPACITOR CH 50V 330P	1	
C5608,09	ECUM1E104ZFN	E.CAPACITOR 25V 0.1U	2	
C5610	ECA1HXS100	E.CAPACITOR 50V 10U	1	
C5611	ECUM1H560JCN	C.CAPACITOR CH 50V 56P	1	
C5612-18	ECUM1E104ZFN	E.CAPACITOR 25V 0.1U	7	
C5619	ECUM1E153KBN	C.CAPACITOR CH 25V 0.015U	1	
C5620-22	ECUM1E104ZFN	E.CAPACITOR 25V 0.1U	3	
C5623	ECA1CXS470	E.CAPACITOR 16V 47U	1	
C5624	ECUM1E104ZFN	E.CAPACITOR 25V 0.1U	1	
C5625	ECA1CXS470	E.CAPACITOR 16V 47U	1	
C5626-30	ECUM1E104ZFN	E.CAPACITOR 25V 0.1U	5	
C5631	ECUM1H331JCN	C.CAPACITOR CH 50V 330P	1	
C5632,33	ECUM1E104ZFN	E.CAPACITOR 25V 0.1U	2	
C5634	ECA1HXS100	E.CAPACITOR 50V 10U	1	
C5635	ECUM1H561JCN	C.CAPACITOR CH 50V 560P	1	
C5636-42	ECUM1E104ZFN	E.CAPACITOR 25V 0.1U	7	
C5643	ECUM1E153KBN	C.CAPACITOR CH 25V 0.015U	1	
C5644-58	ECUM1E104ZFN	E.CAPACITOR 25V 0.1U	15	
CN5001	VJP1230R	CONNECTOR (MALE)	1	
CN5002	VJP1230G	CONNECTOR (MALE)	1	
D5301	FC54M-5	DIODE	1	
D5302	MA157	DIODE	1	
D5401	MA151K	DIODE	1	
D5600	MA151K	DIODE	1	
D5601	MA3030	DIODE	1	
D5602-05	MA151K	DIODE	4	
D5606	MA3030	DIODE	1	
D5607-09	MA151K	DIODE	3	
DL5001	VLD0221	DELAY	1	
DL5002,03	VLD0222	DELAY	2	
FL5001-04	VLF0931	FILTER	4	
IC5001,02	UPC1663G	IC	2	
IC5003	MC1495L	IC	1	
IC5004	UPC1663G	IC	1	

Ref.No.	Part No.	Part Name & Description	Pcs	Remarks
IC5005-07	MC1495L	IC	3	
IC5008,09	UPC1663G	IC	2	
IC5010	AD96685BQ	IC	1	
IC5011	UPC1663G	IC	1	
IC5300,01	MC10H116L	IC	2	
IC5302	MC10H107L	IC	1	
IC5303	MB813AZ	IC	1	
IC5304	MC10H116L	IC	1	
IC5306	UPC78L08J	IC	1	
IC5307	UPC79L08J	IC	1	
IC5308	TL082CPS	IC	1	
IC5309	LM337T	IC	1	
IC5400	MC74HC04AF	IC	1	
IC5402	MC14053BF	IC	1	
IC5500	UPC1663G	IC	1	
IC5501	NJM1496M	IC	1	
IC5502	TL082CPS	IC	1	
IC5503	NJM360M	IC	1	
IC5600	TL082CPS	IC	1	
IC5601	NJM1496M	IC	1	
IC5602	TL084CNS	IC	1	
IC5603	NJM1496M	IC	1	
IC5604	TL084CNS	IC	1	
IC5605	MC14053BF	IC	1	
L301	VLQ0188MR56N	COIL 0.56UH	1	
L5001,02	VLQEL06F100J	COIL 10UH	2	
L5003	VLQ0171K4R7N	COIL 4.7UH	1	
L5004,05	VLQEL06F100J	COIL 10UH	2	
L5006,07	VLQ0171K4R7N	COIL 4.7UH	2	
L5008	VLQ0171M2R2N	COIL 2.2UH	1	
L5009,10	VLQEL06F100J	COIL 10UH	2	
L5011	VLQ0171K4R7N	COIL 4.7UH	1	
L5012-14	VLQ0171M1R8N	COIL 1.8UH	3	
L5300	VLQEL06F100J	COIL 10UH	1	
L5500,01	VLQ0188KR39N	COIL 0.39UH	2	
L5600,01	VLQEL06F100J	COIL 10UH	2	
P201,02	VJP3151	CONNECTOR (MALE)	2	
Q309,10	2SK198-P	TRANSISTOR	2	
Q5001-04	XN6537	TRANSISTOR	4	
Q5005	XN5531	TRANSISTOR	1	
Q5006,07	2SA1738	TRANSISTOR	2	
Q5008	XN5531	TRANSISTOR	1	
Q5009-11	2SC3130	TRANSISTOR	3	
Q5012-16	2SC2480-S	TRANSISTOR	5	
Q5017-19	2SA1022-C	TRANSISTOR	3	
Q5020,21	2SC3130	TRANSISTOR	2	
Q5022,23	2SD1938-T	TRANSISTOR	2	
Q5300	XN5531	TRANSISTOR	1	
Q5301	2SC2295-C	TRANSISTOR	1	
Q5302,03	XN6543	TRANSISTOR	2	
Q5304	2SC2295-C	TRANSISTOR	1	
Q5305	2SA1022-C	TRANSISTOR	1	
Q5306	2SC2295-C	TRANSISTOR	1	
Q5307	2SA1022-C	TRANSISTOR	1	
Q5308	2SC2295-C	TRANSISTOR	1	
Q5402	2SD601A-R	TRANSISTOR	1	
Q5403,04	2SD1938-T	TRANSISTOR	2	
Q5500-02	2SC3130	TRANSISTOR	3	
Q5503	2SC2295-C	TRANSISTOR	1	
Q5504	2SA1022-C	TRANSISTOR	1	
Q5600	XN5531	TRANSISTOR	1	
Q5601,02	2SC3130	TRANSISTOR	2	
Q5603	XN6435	TRANSISTOR	1	
Q5604	2SC3130	TRANSISTOR	1	
Q5605	XN5531	TRANSISTOR	1	
Q5606-08	2SC3130	TRANSISTOR	3	

Ref.No.	Part No.	Part Name & Description	Pcs	Remarks
Q5609	XN6435	TRANSISTOR	1	
Q5610,11	2SA1022-C	TRANSISTOR	2	
		RESISTORS		
R375	ERJ6GEYJ820	M.RESISTOR CH1/10W 82	1	
R5001,02	VRE0034E510	M.RESISTOR CH 1/10W 51	2	
R5003,04	ERJ6GEYJ182	M.RESISTOR CH1/10W 1.8K	2	
R5005	ERJ6GEYJ560	M.RESISTOR CH1/10W 56	1	
R5006,07	ERJ6GEYJ470	M.RESISTOR CH1/10W 47	2	
R5008,09	ERJ6GEYJ100	M.RESISTOR CH1/10W 10	2	
R5010,11	ERJ6GEYJ152	M.RESISTOR CH1/10W 1.5K	2	
R5012	ERJ6GEYJ101	M.RESISTOR CH1/10W 100	1	
R5013,14	ERJ6GEYJ470	M.RESISTOR CH1/10W 47	2	
R5015,16	ERJ6GEYG151	M.RESISTOR CH1/10W 150	2	
R5017	ERJ6GEYJ102	M.RESISTOR CH1/10W 1K	1	
R5018	ERJ6GEYJ221	M.RESISTOR CH1/10W 220	1	
R5019	ERJ6GEYJ470	M.RESISTOR CH1/10W 47	1	
R5020,21	VRE0034E510	M.RESISTOR CH 1/10W 51	2	
R5022	ERJ6GEYJ182	M.RESISTOR CH1/10W 1.8K	1	
R5023	ERJ6GEYJ152	M.RESISTOR CH1/10W 1.5K	1	
R5024	ERJ6GEYJ560	M.RESISTOR CH1/10W 56	1	
R5025,26	ERJ6GEYJ470	M.RESISTOR CH1/10W 47	2	
R5027,28	ERJ6GEYJ100	M.RESISTOR CH1/10W 10	2	
R5029,30	ERJ6GEYJ152	M.RESISTOR CH1/10W 1.5K	2	
R5031	ERJ6GEYJ101	M.RESISTOR CH1/10W 100	1	
R5032,33	ERJ6GEYJ470	M.RESISTOR CH1/10W 47	2	
R5034	ERJ6GEYJ682	M.RESISTOR CH1/10W 6.8K	1	
R5035	ERJ6GEYJ272	M.RESISTOR CH1/10W 2.7K	1	
R5036	ERJ6GEYG151	M.RESISTOR CH1/10W 150	1	
R5037	ERJ6GEYJ272	M.RESISTOR CH1/10W 2.7K	1	
R5038	ERJ6GEYJ682	M.RESISTOR CH1/10W 6.8K	1	
R5039,40	ERJ6GEYJ273	M.RESISTOR CH1/10W 27K	2	
R5041,42	ERJ6GEYJ560	M.RESISTOR CH1/10W 56	2	
R5043,44	ERJ6GEYJ122	M.RESISTOR CH1/10W 1.2K	2	
R5045	ERJ6GEYJ101	M.RESISTOR CH1/10W 100	1	
R5046	ERJ6GEYJ470	M.RESISTOR CH1/10W 47	1	
R5047	ERJ6GEYJ560	M.RESISTOR CH1/10W 56	1	
R5048	ERJ6GEYJ681	M.RESISTOR CH1/10W 680	1	
R5049,50	ERJ6GEYJ470	M.RESISTOR CH1/10W 47	2	
R5051	ERJ6GEYJ101	M.RESISTOR CH1/10W 100	1	
R5052	ERJ6GEYJ331	M.RESISTOR CH1/10W 330	1	
R5053	ERJ6GEYJ470	M.RESISTOR CH1/10W 47	1	
R5054	ERJ6GEYF472	M.RESISTOR CH1/10W 4.7K	1	
R5055,56	ERJ6GEYJ471	M.RESISTOR CH1/10W 470	2	
R5057	ERJ6GEYJ331	M.RESISTOR CH1/10W 330	1	
R5058	ERJ6GEYJ101	M.RESISTOR CH1/10W 100	1	
R5059,60	ERJ6GEYJ331	M.RESISTOR CH1/10W 330	2	
R5061,62	ERJ6GEYJ103	M.RESISTOR CH1/10W 10K	2	
R5063	ERJ6GEYJ470	M.RESISTOR CH1/10W 47	1	
R5064	ERJ6GEYJ560	M.RESISTOR CH1/10W 56	1	
R5065	ERJ6GEYJ561	M.RESISTOR CH1/10W 560	1	
R5066,67	VRE0034E510	M.RESISTOR CH 1/10W 51	2	
R5068	ERJ6GEYJ560	M.RESISTOR CH1/10W 56	1	
R5069	ERJ6GEYJ102	M.RESISTOR CH1/10W 1K	1	
R5070	ERJ6GEYF472	M.RESISTOR CH1/10W 4.7K	1	
R5071	ERJ6GEYJ470	M.RESISTOR CH1/10W 47	1	
R5072	ERJ6GEYJ101	M.RESISTOR CH1/10W 100	1	
R5074	ERJ6GEYJ101	M.RESISTOR CH1/10W 100	1	
R5075	ERJ6GEYF472	M.RESISTOR CH1/10W 4.7K	1	
R5076	ERJ6GEYJ390	M.RESISTOR CH1/10W 39	1	
R5077	ERJ6GEYF472	M.RESISTOR CH1/10W 4.7K	1	
R5078	ERJ6GEYJ390	M.RESISTOR CH1/10W 39	1	
R5079	ERJ6GEYG151	M.RESISTOR CH1/10W 150	1	
R5080	ERJ6GEYJ391	M.RESISTOR CH1/10W 390	1	
R5081,82	ERJ6GEYJ471	M.RESISTOR CH1/10W 470	2	
R5083	ERJ8GCYJ221	M.RESISTOR CH 1/8W 220	1	
R5084	ERJ6GEYF472	M.RESISTOR CH1/10W 4.7K	1	
R5085	ERJ6GEYJ390	M.RESISTOR CH1/10W 39	1	
R5086	ERJ8GCYJ221	M.RESISTOR CH 1/8W 220	1	
R5087	ERJ6GEYF472	M.RESISTOR CH1/10W 4.7K	1	
R5088	ERJ6GEYJ390	M.RESISTOR CH1/10W 39	1	
R5089	ERJ6GEYJ101	M.RESISTOR CH1/10W 100	1	
R5090	ERJ6GEYJ390	M.RESISTOR CH1/10W 39	1	

Ref.No.	Part No.	Part Name & Description	Pcs	Remarks
R5091	ERJ6GEYJ102	M.RESISTOR CH1/10W 1K	1	
R5092	ERJ6GEYJ392	M.RESISTOR CH1/10W 3.9K	1	
R5093	ERJ6GEYJ101	M.RESISTOR CH1/10W 100	1	
R5094	ERJ6GEYJ331	M.RESISTOR CH1/10W 330	1	
R5095	ERJ6GEYJ392	M.RESISTOR CH1/10W 3.9K	1	
R5096,97	ERJ6GEYJ121	M.RESISTOR CH1/10W 120	2	
R5098,99	ERJ6GEYF472	M.RESISTOR CH1/10W 4.7K	2	
R5100,01	ERJ6GEYJ390	M.RESISTOR CH1/10W 39	2	
R5102	ERJ6GEYG151	M.RESISTOR CH1/10W 150	1	
R5103	ERJ6GEYJ391	M.RESISTOR CH1/10W 390	1	
R5104,05	ERJ6GEYJ471	M.RESISTOR CH1/10W 470	2	
R5106	ERJ8GCYJ221	M.RESISTOR CH 1/8W 220	1	
R5108	ERJ6GEYJ470	M.RESISTOR CH1/10W 47	1	
R5109	ERJ8GCYJ221	M.RESISTOR CH 1/8W 220	1	
R5110	ERJ6GEYF472	M.RESISTOR CH1/10W 4.7K	1	
R5111	ERJ6GEYJ470	M.RESISTOR CH1/10W 47	1	
R5113,14	ERJ6GEYJ101	M.RESISTOR CH1/10W 100	2	
R5115	ERJ6GEYJ222	M.RESISTOR CH1/10W 2.2K	1	
R5116	ERJ6GEYJ392	M.RESISTOR CH1/10W 3.9K	1	
R5117	ERJ6GEYJ101	M.RESISTOR CH1/10W 100	1	
R5118	ERJ6GEYJ222	M.RESISTOR CH1/10W 2.2K	1	
R5119	ERJ6GEYJ101	M.RESISTOR CH1/10W 100	1	
R5120	ERJ6GEYJ222	M.RESISTOR CH1/10W 2.2K	1	
R5121	ERJ6GEYJ101	M.RESISTOR CH1/10W 100	1	
R5122	ERJ6GEYJ222	M.RESISTOR CH1/10W 2.2K	1	
R5123	ERJ6GEYJ101	M.RESISTOR CH1/10W 100	1	
R5124	ERJ6GEYJ332	M.RESISTOR CH1/10W 3.3K	1	
R5125	ERJ6GEYJ222	M.RESISTOR CH1/10W 2.2K	1	
R5126,27	ERJ6GEYJ390	M.RESISTOR CH1/10W 39	2	
R5128	ERJ6GEYJ101	M.RESISTOR CH1/10W 100	1	
R5129	ERJ6GEYJ122	M.RESISTOR CH1/10W 1.2K	1	
R5130	ERJ6GEYJ102	M.RESISTOR CH1/10W 1K	1	
R5131	ERJ6GEYJ392	M.RESISTOR CH1/10W 3.9K	1	
R5132	ERJ6GEYJ102	M.RESISTOR CH1/10W 1K	1	
R5133	ERJ6GEYJ331	M.RESISTOR CH1/10W 330	1	
R5134	ERJ6GEYJ392	M.RESISTOR CH1/10W 3.9K	1	
R5135,36	ERJ6GEYJ390	M.RESISTOR CH1/10W 39	2	
R5137	ERJ6GEYJ101	M.RESISTOR CH1/10W 100	1	
R5138	ERJ6GEYJ390	M.RESISTOR CH1/10W 39	1	
R5139	ERJ6GEYJ102	M.RESISTOR CH1/10W 1K	1	
R5140	ERJ6GEYJ392	M.RESISTOR CH1/10W 3.9K	1	
R5141	ERJ6GEYJ102	M.RESISTOR CH1/10W 1K	1	
R5142	ERJ6GEYG151	M.RESISTOR CH1/10W 150	1	
R5143	ERJ6GEYJ392	M.RESISTOR CH1/10W 3.9K	1	
R5144,45	ERJ6GEYJ390	M.RESISTOR CH1/10W 39	2	
R5146	ERJ6GEYF333	M.RESISTOR CH1/10W 33K	1	
R5147	ERJ6GEYJ392	M.RESISTOR CH1/10W 3.9K	1	
R5148	ERJ6GEYJ390	M.RESISTOR CH1/10W 39	1	
R5149	ERJ6GEYJ471	M.RESISTOR CH1/10W 470	1	
R5150	ERJ6GEYJ392	M.RESISTOR CH1/10W 3.9K	1	
R5151	ERJ6GEYJ102	M.RESISTOR CH1/10W 1K	1	
R5152	ERJ6GEYJ331	M.RESISTOR CH1/10W 330	1	
R5153	ERJ6GEYJ392	M.RESISTOR CH1/10W 3.9K	1	
R5155,56	ERJ6GEYG181	M.RESISTOR CH1/10W 180	2	
R5157,58	ERJ6GEYJ392	M.RESISTOR CH1/10W 3.9K	2	
R5159,60	ERJ6GEYJ390	M.RESISTOR CH1/10W 39	2	
R5161	ERJ6GEYG151	M.RESISTOR CH1/10W 150	1	
R5162	ERJ6GEYJ391	M.RESISTOR CH1/10W 390	1	
R5163,64	ERJ6GEYJ471	M.RESISTOR CH1/10W 470	2	
R5165	ERJ8GCYJ221	M.RESISTOR CH 1/8W 220	1	
R5166	ERJ6GEYJ470	M.RESISTOR CH1/10W 47	1	
R5168	ERJ8GCYJ221	M.RESISTOR CH 1/8W 220	1	
R5169	ERJ6GEYF472	M.RESISTOR CH1/10W 4.7K	1	
R5170	ERJ6GEYJ470	M.RESISTOR CH1/10W 47	1	
R5172	ERJ6GEYJ470	M.RESISTOR CH1/10W 47	1	
R5173,74	ERJ6GEYJ471	M.RESISTOR CH1/10W 470	2	
R5175,76	ERJ8GCYJ331	M.RESISTOR CH 1/8W 330	2	
R5177-80	ERJ6GEYF472	M.RESISTOR CH1/10W 4.7K	4	
R5181,82	ERJ8GCYJ221	M.RESISTOR CH 1/8W 220	2	
R5183,84	VRE0034E510	M.RESISTOR CH 1/10W 51	2	
R5185	ERJ6GEYJ560	M.RESISTOR CH1/10W 56	1	
R5186	ERJ6GEYJ122	M.RESISTOR CH1/10W 1.2K	1	
R5187	ERJ6GEYJ101	M.RESISTOR CH1/10W 100	1	
R5188	ERJ6GEYJ471	M.RESISTOR CH1/10W 470	1	
R5189	ERJ6GEYJ101	M.RESISTOR CH1/10W 100	1	

Ref.No.	Part No.	Part Name & Description	Pcs	Remarks
R5190	ERJ6GEYF472	M.RESISTOR CH1/10W 4.7K	1	
R5191	ERJ6GEYJ470	M.RESISTOR CH1/10W 47	1	
R5192	ERJ6GEYJ471	M.RESISTOR CH1/10W 470	1	
R5193	ERJ6GEYJ101	M.RESISTOR CH1/10W 100	1	
R5194	ERJ6GEYJ470	M.RESISTOR CH1/10W 47	1	
R5195	ERJ6GEYJ101	M.RESISTOR CH1/10W 100	1	
R5196	ERJ6GEYJ470	M.RESISTOR CH1/10W 47	1	
R5197,98	ERJ8GCYJ221	M.RESISTOR CH 1/8W 220	2	
R5199	ERJ6GEYF472	M.RESISTOR CH1/10W 4.7K	1	
R5200	VRE0034E750	M.RESISTOR CH 1/10W 75	1	
R5201	ERJ6GEYJ101	M.RESISTOR CH1/10W 100	1	
R5202	ERJ6GEYJ102	M.RESISTOR CH1/10W 1K	1	
R5203	ERJ6GEYJ101	M.RESISTOR CH1/10W 100	1	
R5204	ERJ6GEYJ102	M.RESISTOR CH1/10W 1K	1	
R5205,06	ERJ6GEYG680	M.RESISTOR CH1/10W 68	2	
R5207	ERJ6GEYJ470	M.RESISTOR CH1/10W 47	1	
R5208	ERJ6GEYJ221	M.RESISTOR CH1/10W 220	1	
R5209,10	ERJ6GEYG151	M.RESISTOR CH1/10W 150	2	
R5211	ERJ6GEYJ102	M.RESISTOR CH1/10W 1K	1	
R5212	ERJ6GEYJ101	M.RESISTOR CH1/10W 100	1	
R5213	ERJ6GEYJ682	M.RESISTOR CH1/10W 6.8K	1	
R5214,15	ERJ6GEYJ390	M.RESISTOR CH1/10W 39	2	
R5216-22	ERJ6GEY0R00	M.RESISTOR CH 1/10W 0	7	
R5223	ERJ6GEYJ470	M.RESISTOR CH1/10W 47	1	
R5224,25	ERJ6GEY0R00	M.RESISTOR CH 1/10W 0	2	
R5226	ERJ6GEYJ150	M.RESISTOR CH1/10W 15	1	
R5227	ERJ6GEYJ470	M.RESISTOR CH1/10W 47	1	
R5300-02	ERJ6GEYJ101	M.RESISTOR CH1/10W 100	3	
R5303,04	ERJ6GEYJ391	M.RESISTOR CH1/10W 390	2	
R5305-09	ERJ6GEYJ101	M.RESISTOR CH1/10W 100	5	
R5310,11	ERJ6GEYJ330	M.RESISTOR CH1/10W 33	2	
R5312,13	ERJ6GEYJ561	M.RESISTOR CH1/10W 560	2	
R5314,15	ERJ6GEYJ330	M.RESISTOR CH1/10W 33	2	
R5318,19	VRE0034E101	M.RESISTOR CH 1/10W 100	2	
R5320,21	ERJ6GEYF472	M.RESISTOR CH1/10W 4.7K	2	
R5322	ERJ6GEYJ102	M.RESISTOR CH1/10W 1K	1	
R5323	VRE0034E510	M.RESISTOR CH 1/10W 51	1	
R5324	VRE0034E101	M.RESISTOR CH 1/10W 100	1	
R5325	VRE0034E510	M.RESISTOR CH 1/10W 51	1	
R5326	VRE0034E101	M.RESISTOR CH 1/10W 100	1	
R5327	ERJ6GEYG181	M.RESISTOR CH1/10W 180	1	
R5329	ERJ6GEYJ271	M.RESISTOR CH1/10W 270	1	
R5331,32	ERJ6GEYJ101	M.RESISTOR CH1/10W 100	2	
R5335-42	ERJ6GEYJ101	M.RESISTOR CH1/10W 100	8	
R5343,44	ERJ6GEYJ331	M.RESISTOR CH1/10W 330	2	
R5345,46	VRE0034E510	M.RESISTOR CH 1/10W 51	2	
R5347,48	ERJ6GEYJ331	M.RESISTOR CH1/10W 330	2	
R5349,50	VRE0034E510	M.RESISTOR CH 1/10W 51	2	
R5351	ERJ6GEYJ101	M.RESISTOR CH1/10W 100	1	
R5352	ERJ6GEYJ562	M.RESISTOR CH1/10W 5.6K	1	
R5353	VRE0034E512	M.RESISTOR CH 1/10W 5.1K	1	
R5354	ERJ6GEYJ821	M.RESISTOR CH1/10W 820	1	
R5355	ERJ6GEYJ562	M.RESISTOR CH1/10W 5.6K	1	
R5356,57	ERJ6GEYJ103	M.RESISTOR CH1/10W 10K	2	
R5358	ERJ6GEYJ101	M.RESISTOR CH1/10W 100	1	
R5359	ERJ6GEYJ223	M.RESISTOR CH1/10W 22K	1	
R5360	ERG2SJ220	M.RESISTOR 2W 22	1	
R5361	ERJ6GEYJ121	M.RESISTOR CH1/10W 120	1	
R5362	ERJ6GEYJ820	M.RESISTOR CH1/10W 82	1	
R5363	ERJ6GEYJ221	M.RESISTOR CH1/10W 220	1	
R5364,65	VRE0034E750	M.RESISTOR CH 1/10W 75	2	
R5366	ERJ6GEYJ102	M.RESISTOR CH1/10W 1K	1	
R5368	ERJ6GEYJ101	M.RESISTOR CH1/10W 100	1	
R5369	ERJ6GEY0R00	M.RESISTOR CH 1/10W 0	1	
R5372,73	ERJ6GEYJ101	M.RESISTOR CH1/10W 100	2	
R5374	ERJ6GEYJ330	M.RESISTOR CH1/10W 33	1	
R5400	ERJ6GEYF472	M.RESISTOR CH1/10W 4.7K	1	
R5401-03	ERJ6GEYJ103	M.RESISTOR CH1/10W 10K	3	
R5411	ERJ6GEYJ101	M.RESISTOR CH1/10W 100	1	
R5412,13	ERJ6GEYF472	M.RESISTOR CH1/10W 4.7K	2	
R5414,15	ERJ6GEYJ103	M.RESISTOR CH1/10W 10K	2	
R5416	ERJ6GEYJ183	M.RESISTOR CH1/10W 18K	1	
R5500	ERJ6GEYJ101	M.RESISTOR CH1/10W 100	1	
R5501	ERJ6GEYJ560	M.RESISTOR CH1/10W 56	1	
R5502	ERJ6GEYJ561	M.RESISTOR CH1/10W 560	1	

Ref.No.	Part No.	Part Name & Description	Pcs	Remarks
R5503,04	VRE0034E750	M.RESISTOR CH 1/10W 75	2	
R5505,06	ERJ6GEYJ470	M.RESISTOR CH1/10W 47	2	
R5508,09	ERJ6GEYJ331	M.RESISTOR CH1/10W 330	2	
R5510,11	ERJ6GEYJ102	M.RESISTOR CH1/10W 1K	2	
R5512-14	ERJ6GEYJ560	M.RESISTOR CH1/10W 56	3	
R5515,16	ERJ6GEYJ562	M.RESISTOR CH1/10W 5.6K	2	
R5517-21	ERJ6GEYJ102	M.RESISTOR CH1/10W 1K	5	
R5522	ERJ6GEYJ821	M.RESISTOR CH1/10W 820	1	
R5523-26	ERJ6GEYJ560	M.RESISTOR CH1/10W 56	4	
R5527	ERJ6GEYJ822	M.RESISTOR CH1/10W 8.2K	1	
R5528	ERJ6GEYJ392	M.RESISTOR CH1/10W 3.9K	1	
R5530	ERJ6GEYJ392	M.RESISTOR CH1/10W 3.9K	1	
R5531	ERJ6GEYJ562	M.RESISTOR CH1/10W 5.6K	1	
R5532,33	ERJ6GEYJ102	M.RESISTOR CH1/10W 1K	2	
R5534-37	ERJ6GEYJ103	M.RESISTOR CH1/10W 10K	4	
R5538	ERJ6GEYJ101	M.RESISTOR CH1/10W 100	1	
R5539	ERJ6GEYJ821	M.RESISTOR CH1/10W 820	1	
R5540	ERJ6GEYJ123	M.RESISTOR CH1/10W 12K	1	
R5541	VRE0034E750	M.RESISTOR CH 1/10W 75	1	
R5542	ERJ6GEYJ122	M.RESISTOR CH1/10W 1.2K	1	
R5543	ERJ6GEY0R00	M.RESISTOR CH 1/10W 0	1	
R5544	ERJ6GEYJ101	M.RESISTOR CH1/10W 100	1	
R5545	ERJ6GEYJ392	M.RESISTOR CH1/10W 3.9K	1	
R5547	ERJ6GEYJ222	M.RESISTOR CH1/10W 2.2K	1	
R5548	ERJ6GEYJ101	M.RESISTOR CH1/10W 100	1	
R5600,01	ERJ6GEYJ103	M.RESISTOR CH1/10W 10K	2	
R5602-04	ERJ6GEYJ562	M.RESISTOR CH1/10W 5.6K	3	
R5605	ERJ6GEYJ101	M.RESISTOR CH1/10W 100	1	
R5606,07	ERJ6GEYJ561	M.RESISTOR CH1/10W 560	2	
R5608,09	ERJ6GEYJ560	M.RESISTOR CH1/10W 56	2	
R5610	ERDS2TJ102	C.RESISTOR 1/4W 1K	1	
R5611	ERDS2TJ101	C.RESISTOR 1/4W 100	1	
R5612	ERJ6GEYJ101	M.RESISTOR CH1/10W 100	1	
R5613	ERDS2TJ222	C.RESISTOR 1/4W 2.2K	1	
R5614-17	ERJ6GEYJ101	M.RESISTOR CH1/10W 100	4	
R5618	ERDS2TJ152	C.RESISTOR 1/4W 1.5K	1	
R5619	ERJ6GEYG151	M.RESISTOR CH1/10W 150	1	
R5620,21	ERJ6GEYJ470	M.RESISTOR CH1/10W 47	2	
R5622,23	ERJ6GEYJ102	M.RESISTOR CH1/10W 1K	2	
R5624	ERJ6GEYG151	M.RESISTOR CH1/10W 150	1	
R5625,26	ERJ6GEYJ102	M.RESISTOR CH1/10W 1K	2	
R5627	ERJ6GEYJ471	M.RESISTOR CH1/10W 470	1	
R5628	ERJ6GEYJ223	M.RESISTOR CH1/10W 22K	1	
R5629	ERJ6GEYJ331	M.RESISTOR CH1/10W 330	1	
R5630,31	ERJ6GEYJ471	M.RESISTOR CH1/10W 470	2	
R5632,33	ERJ6GEYJ562	M.RESISTOR CH1/10W 5.6K	2	
R5634-37	ERJ6GEYJ103	M.RESISTOR CH1/10W 10K	4	
R5638	ERJ6GEYJ102	M.RESISTOR CH1/10W 1K	1	
R5639	ERJ6GEYJ682	M.RESISTOR CH1/10W 6.8K	1	
R5640	ERJ6GEYJ123	M.RESISTOR CH1/10W 12K	1	
R5641,42	ERJ6GEYJ102	M.RESISTOR CH1/10W 1K	2	
R5643,44	ERJ6GEYJ330	M.RESISTOR CH1/10W 33	2	
R5645	ERJ6GEYJ390	M.RESISTOR CH1/10W 39	1	
R5646-49	ERJ6GEYJ101	M.RESISTOR CH1/10W 100	4	
R5650,51	ERJ6GEYJ103	M.RESISTOR CH1/10W 10K	2	
R5652-54	ERJ6GEYJ562	M.RESISTOR CH1/10W 5.6K	3	
R5655	ERJ6GEYJ101	M.RESISTOR CH1/10W 100	1	
R5656,57	ERJ6GEYJ561	M.RESISTOR CH1/10W 560	2	
R5658,59	ERJ6GEYJ560	M.RESISTOR CH1/10W 56	2	
R5670	ERDS2TJ102	C.RESISTOR 1/4W 1K	1	
R5671	ERDS2TJ101	C.RESISTOR 1/4W 100	1	
R5672	ERJ6GEYJ101	M.RESISTOR CH1/10W 100	1	
R5673	ERDS2TJ222	C.RESISTOR 1/4W 2.2K	1	
R5674,75	ERJ6GEYJ101	M.RESISTOR CH1/10W 100	2	
R5677,78	ERJ6GEYJ101	M.RESISTOR CH1/10W 100	2	
R5679	ERDS2TJ152	C.RESISTOR 1/4W 1.5K	1	
R5680	ERJ6GEYJ101	M.RESISTOR CH1/10W 100	1	
R5681,82	ERJ6GEYJ102	M.RESISTOR CH1/10W 1K	2	
R5683,84	ERJ6GEYJ470	M.RESISTOR CH1/10W 47	2	
R5685	ERJ6GEYJ471	M.RESISTOR CH1/10W 470	1	
R5686	ERJ6GEYJ223	M.RESISTOR CH1/10W 22K	1	
R5687,88	ERJ6GEYJ471	M.RESISTOR CH1/10W 470	2	
R5689	ERJ6GEYJ331	M.RESISTOR CH1/10W 330	1	
R5690,91	ERJ6GEYJ562	M.RESISTOR CH1/10W 5.6K	2	
R5692-97	ERJ6GEYJ103	M.RESISTOR CH1/10W 10K	6	

S3 CUE AUDIO VEP84107A

Ref.No.	Part No.	Part Name & Description	Pcs	Remarks
R5698	ERJ6GEYJ102	M.RESISTOR CH1/10W 1K	1	
R5699	ERJ6GEYJ682	M.RESISTOR CH1/10W 6.8K	1	
R5700	ERJ6GEYJ123	M.RESISTOR CH1/10W 12K	1	
R5701-04	ERJ6GEYJ102	M.RESISTOR CH1/10W 1K	4	
R5705	ERJ6GEYJ471	M.RESISTOR CH1/10W 470	1	
R5706	ERJ6GEYJ100	M.RESISTOR CH1/10W 10	1	
R5707,08	ERJ6GEYJ101	M.RESISTOR CH1/10W 100	2	
R5709,10	ERJ6GEYJ560	M.RESISTOR CH1/10W 56	2	
R5711,12	ERJ6GEYF472	M.RESISTOR CH1/10W 4.7K	2	
R5713-18	ERJ6GEYJ100	M.RESISTOR CH1/10W 10	6	
R5721,22	ERJ6GEYJ100	M.RESISTOR CH1/10W 10	2	
R5723	ERJ6GEY0R00	M.RESISTOR CH 1/10W 0	1	
RY5002	VSY2069	RELAY	1	
SW5001-03	VJP1990	CONNECTOR (MALE)	3	
SW5400,01	VJP2536A003	CONNECTOR (MALE)	2	
SW5600,01	VJP2536A003	CONNECTOR (MALE)	2	
SW5001S	VJS1990	CONNECTOR (FEMALE)	1	
SW5002S	VJS1990	CONNECTOR (FEMALE)	1	
SW5003S	VJS1990	CONNECTOR (FEMALE)	1	
SW5400S	VJS1990	CONNECTOR (FEMALE)	1	
SW5401S	VJS1990	CONNECTOR (FEMALE)	1	
SW5600S	VJS1990	CONNECTOR (FEMALE)	1	
SW5601S	VJS1990	CONNECTOR (FEMALE)	1	
TP5001-05	VJR0646	TEST POINT	5	
TP5007-09	VJR0646	TEST POINT	3	
TP5300-04	VJR0646	TEST POINT	5	
TP5400-04	VJR0646	TEST POINT	5	
TP5501,02	VJR0646	TEST POINT	2	
TP5600-04	VJR0646	TEST POINT	5	
TPG5001-05	VJR0646	TEST POINT	5	
TPG5300	VJR0646	TEST POINT	1	
TPG5600	VJR0646	TEST POINT	1	
VC5001,02	ECV1ZW20X53T	E.CAPACITOR 50V 20P	2	
VC5301	ECV1ZW20X53T	E.CAPACITOR 50V 20P	1	
VL5001	EIV7EL062B	COIL	1	
VL5002	EIV7EL063B	COIL	1	
VL5003	EIV7EL065B	COIL	1	
VL5004	EIV7EL068B	COIL	1	
VL5005	EIV7EL073B	COIL	1	
VL5006	EIV7EL072B	COIL	1	
VL5300	VLQ0502	COIL	1	
VR5001	VRV0064B501	V.RESISTOR 500	1	
VR5002	VRV0064B202	V.RESISTOR 2K	1	
VR5003	VRV0109B501	V.RESISTOR 500	1	
VR5004	VRV0109B201	V.RESISTOR 200	1	
VR5005,06	VRV0109B101	V.RESISTOR 100	2	
VR5008,09	VRV0109B101	V.RESISTOR 100	2	
VR5010	VRV0064B202	V.RESISTOR 2K	1	
VR5011,12	VRV0109B101	V.RESISTOR 100	2	
VR5300	VRV0109B102	V.RESISTOR 1K	1	
VR5301	VRV0109B101	V.RESISTOR 100	1	
VR5302	VRV0113B103	V.RESISTOR 10K	1	
VR5500	VRV0109B202	V.RESISTOR 2K	1	
VR5501	VRV0109B502	V.RESISTOR 5K	1	
VR5502	VRV0109B202	V.RESISTOR 2K	1	
VR5600	VRV0109B502	V.RESISTOR 5K	1	
VR5601	VRV0109B103	V.RESISTOR 10K	1	

Ref.No.	Part No.	Part Name & Description	Pcs	Remarks
VR5602	VRV0109B502	V.RESISTOR 5K	1	
VR5603	VRV0109B103	V.RESISTOR 10K	1	
VR5604	VRV0109B502	V.RESISTOR 5K	1	
VR5605	VRV0109B103	V.RESISTOR 10K	1	
VR5606	VRV0109B502	V.RESISTOR 5K	1	
VR5607	VRV0109B103	V.RESISTOR 10K	1	
VR5608-13	VRV0064B202	V.RESISTOR 2K	6	
VR5614,15	VRV0109B502	V.RESISTOR 5K	2	
		MISCELLANEOUS		
	VGQ0291	P.C.BOARD NAME PLATE	1	
	VJF0300	BINDER	1	
	VJF0817	CLAMPER	1	
	VML2143	CARD PULLER	1	
	VML2144	CARD PULLER	1	
	VSC3316	SHIELD CASE	1	
	VSC3317	SHIELD CASE	1	
	VXA4420	P.C.BOARD SHIELD PLATE	1	
	XNG26E	NUT	4	
	XTV3+6FFR	SCREW	5	
	XYN26+C12	SCREW	4	
	VMS2875	POST	3	
	VEP84107A	P.C.BOARD W/COMPONENT S3 CUE AUDIO		
		CAPACITORS		
C4001	ECA1VXLV470	E.CAPACITOR 50V 47U	1	
C4002	ECUM1E104ZFN	E.CAPACITOR 25V 0.1U	1	
C4003	ECA1HXLV101X	E.CAPACITOR 50V 100U	1	
C4004,05	ECUM1H103KBN	C.CAPACITOR CH 50V 0.01U	2	
C4006	ECQB1H103JF	P.CAPACITOR 50V 0.01U	1	
C4007	ECQB1H682JF	P.CAPACITOR 50V 6800P	1	
C4008	ECA1HXLV101X	E.CAPACITOR 50V 100U	1	
C4009	ECUM1H103KBN	C.CAPACITOR CH 50V 0.01U	1	
C4010	ECA1EXLV101X	E.CAPACITOR 25V 100U	1	
C4011,12	ECA1VXLV220	E.CAPACITOR 50V 22U	2	
C4013,14	ECUM1H222KBN	C.CAPACITOR CH 50V 2200P	2	
C4015	ECA1HXLV330	E.CAPACITOR 50V 33U	1	
C4016	VCF0042	F.CAPACITOR	1	
C4017	ECA1HXLV010	E.CAPACITOR 50V 1U	1	
C4018	ECA1HXNV010	E.CAPACITOR 50V 1U	1	
C4019,20	ECUM1H222KBN	C.CAPACITOR CH 50V 2200P	2	
C4021	ECA1HXLV330	E.CAPACITOR 50V 33U	1	
C4022	VCF0042	F.CAPACITOR	1	
C4023	ECUM1H104KBM	C.CAPACITOR CH 50V 0.1U	1	
C4024	ECA1HXLV010	E.CAPACITOR 50V 1U	1	
C4025	ECA1HXNV010	E.CAPACITOR 50V 1U	1	
C4026,27	ECUM1H222KBN	C.CAPACITOR CH 50V 2200P	2	
C4028	ECA1HXLV330	E.CAPACITOR 50V 33U	1	
C4029	VCF0042	F.CAPACITOR	1	
C4030	ECUM1H104KBM	C.CAPACITOR CH 50V 0.1U	1	
C4031	ECA1HXLV010	E.CAPACITOR 50V 1U	1	
C4032	ECA1HXNV010	E.CAPACITOR 50V 1U	1	
C4033,34	ECUM1H222KBN	C.CAPACITOR CH 50V 2200P	2	
C4035	ECA1HXLV330	E.CAPACITOR 50V 33U	1	
C4036	VCF0042	F.CAPACITOR	1	
C4037	ECUM1H104KBM	C.CAPACITOR CH 50V 0.1U	1	
C4038	ECA1HXLV010	E.CAPACITOR 50V 1U	1	
C4039	ECA1HXNV010	E.CAPACITOR 50V 1U	1	
C4040,41	ECUM1H102JCN	C.CAPACITOR CH 50V 1000P	2	
C4042	ECA1HXLV330	E.CAPACITOR 50V 33U	1	
C4043	ECCF2H121JC	C.CAPACITOR 500V 120P	1	

Ref.No.	Part No.	Part Name & Description	Pcs	Remarks
C4044	ECUM1H221JCN	C.CAPACITOR CH 50V 220P	1	
C4045	ECA1HXLV010	E.CAPACITOR 50V 1U	1	
C4046	ECA1HXNV010	E.CAPACITOR 50V 1U	1	
C4047,48	ECUM1H102JCN	C.CAPACITOR CH 50V 1000P	2	
C4049	ECA1HXLV330	E.CAPACITOR 50V 33U	1	
C4050	VCF0043	F.CAPACITOR	1	
C4051	ECUM1H221JCN	C.CAPACITOR CH 50V 220P	1	
C4052	ECQB1H334JF	P.CAPACITOR 50V 0.33U	1	
C4053	ECUM1H104KBM	C.CAPACITOR CH 50V 0.1U	1	
C4054	ECQB1H334JF	P.CAPACITOR 50V 0.33U	1	
C4055	ECUM1H104KBM	C.CAPACITOR CH 50V 0.1U	1	
C4056	ECA1HXLV100	E.CAPACITOR 50V 10U	1	
C4057	ECA1HXLV3R3	E.CAPACITOR 50V 3.3U	1	
C4058,59	ECA1CXLV101	E.CAPACITOR 16V 100U	2	
C4060	ECUM1E104ZFN	E.CAPACITOR 25V 0.1U	1	
C4061,62	ECA1CXLV101	E.CAPACITOR 16V 100U	2	
C4063	ECUM1E104ZFN	E.CAPACITOR 25V 0.1U	1	
C4064-66	ECA1VXNV4R7	E.CAPACITOR 35V 4.7U	3	
C4067	ECA1HXLV100	E.CAPACITOR 50V 10U	1	
C4068	ECUM1H560JCN	C.CAPACITOR CH 50V 56P	1	
C4069	ECUM1H102JCN	C.CAPACITOR CH 50V 1000P	1	
C4070	ECA1HXLV330	E.CAPACITOR 50V 33U	1	
C4071	ECA1CXLV221	E.CAPACITOR 16V 220U	1	
C4072	ECUM1H103KBN	C.CAPACITOR CH 50V 0.01U	1	
C4073	ECA1CXLV101	E.CAPACITOR 16V 100U	1	
C4074	ECA1HXNV010	E.CAPACITOR 50V 1U	1	
C4075	ECA1HXLV100	E.CAPACITOR 50V 10U	1	
C4076	ECUM1H222KBN	C.CAPACITOR CH 50V 2200P	1	
C4078,79	ECA1CXLV470	E.CAPACITOR 16V 47U	2	
C4080	ECA1EXNV220	E.CAPACITOR 25V 22U	1	
C4081,82	ECA1CXLV470	E.CAPACITOR 16V 47U	2	
C4083	ECA1VXNV4R7	E.CAPACITOR 35V 4.7U	1	
C4084,85	ECA1CXLV470	E.CAPACITOR 16V 47U	2	
C4086	ECA1EXNV220	E.CAPACITOR 25V 22U	1	
C4087,88	ECA1HXLV010	E.CAPACITOR 50V 1U	2	
C4089	ECA1HXLV100	E.CAPACITOR 50V 10U	1	
C4090	ECA1HXLV3R3	E.CAPACITOR 50V 3.3U	1	
C4091-00	ECA1CXLV101	E.CAPACITOR 16V 100U	10	
C4101-07	ECA1CXNV100	E.CAPACITOR 16V 10U	7	
C4108	ECUM1H104KBM	C.CAPACITOR CH 50V 0.1U	1	
C4109-11	ECA1CXNV100	E.CAPACITOR 16V 10U	3	
C4112	ECUM1H153KBN	C.CAPACITOR CH 50V 0.015U	1	
C4113	ECUM1H103KBN	C.CAPACITOR CH 50V 0.01U	1	
C4114	ECUM1H472KBN	C.CAPACITOR CH 50V 4700P	1	
C4115	ECA1CXNV220	E.CAPACITOR 16V 22U	1	
C4116	ECUM1H102JCN	C.CAPACITOR CH 50V 1000P	1	
C4117	ECA1CXLV470	E.CAPACITOR 16V 47U	1	
C4118	ECUM1H271JCN	C.CAPACITOR CH 50V 270P	1	
C4119	ECUM1H820JCN	C.CAPACITOR CH 50V 82P	1	
C4120,21	ECA1CXLV101	E.CAPACITOR 16V 100U	2	
C4122	ECA1CXLV221	E.CAPACITOR 16V 220U	1	
C4123	ECUM1H470JCN	C.CAPACITOR CH 50V 47P	1	
C4124	ECQB1H473JF	P.CAPACITOR 50V 0.047U	1	
C4125	ECA1CXNV100	E.CAPACITOR 16V 10U	1	
C4126	ECUM1H562KBN	C.CAPACITOR CH 50V 5600P	1	
C4127	ECA1CXNV100	E.CAPACITOR 16V 10U	1	
C4128	ECUM1H104KBM	C.CAPACITOR CH 50V 0.1U	1	
C4129	ECA1CXNV100	E.CAPACITOR 16V 10U	1	
C4130	ECA1CXNV220	E.CAPACITOR 16V 22U	1	
C4131	ECUM1H153KBN	C.CAPACITOR CH 50V 0.015U	1	
C4132	ECA1HXLV100	E.CAPACITOR 50V 10U	1	
C4134,35	ECA1HXLV100	E.CAPACITOR 50V 10U	2	
C4136	ECA1VXLV220	E.CAPACITOR 50V 22U	1	
C4137,38	ECA1CXLV101	E.CAPACITOR 16V 100U	2	
C4139,40	ECA1HXLV100	E.CAPACITOR 50V 10U	2	
C4141	ECA1VXLV220	E.CAPACITOR 50V 22U	1	
C4142,43	ECA1HXLV100	E.CAPACITOR 50V 10U	2	
C4144	ECA1VXLV220	E.CAPACITOR 50V 22U	1	
C4145,46	ECA1HXLV100	E.CAPACITOR 50V 10U	2	
C4147	ECA1VXLV220	E.CAPACITOR 50V 22U	1	
C4148	ECA1CXLV470	E.CAPACITOR 16V 47U	1	
C4151-56	ECUM1H220JCN	C.CAPACITOR CH 50V 22P	6	
C4201,02	ECUM1H152JN	C.CAPACITOR CH 50V 1500P	2	
C4203	ECUM1H682KBM	E.CAPACITOR 50V 6800P	1	
C4204	ECA1HXLV330	E.CAPACITOR 50V 33U	1	
C4205	ECUM1H103KBN	C.CAPACITOR CH 50V 0.01U	1	
C4206,07	ECA1CXLV470	E.CAPACITOR 16V 47U	2	
C4211	ECCF1H680JC5	C.CAPACITOR 50V 68P	1	
C4212	ECQV1H104JZ	P.CAPACITOR 50V 0.1U	1	
D4001	MA3100	DIODE	1	
D4002	MA151K	DIODE	1	
D4003	MA151WK	DIODE	1	
D4004	MA153	DIODE	1	
D4005-11	MA151K	DIODE	7	
D4012,13	MA153	DIODE	2	
D4014-16	MA151K	DIODE	3	
D4017	MA153	DIODE	1	
D4018-20	MA151K	DIODE	3	
D4023-30	0A95	DIODE	8	
D4031	MA151K	DIODE	1	
FL4001	VLQ0142	COIL	1	
FL4002	EIR7QG010B	TRANSFORMER	1	
FL4003	VLF0427	FILTER	1	
FL4004	VLQ0190	COIL	1	
FL4005	VLQ0142	COIL	1	
FL4006	EIR7QH002B	TRANSFORMER	1	
FL4007	VLF0427	FILTER	1	
IC4001	MC14011BF	IC	1	
IC4002	MC14538BF	IC	1	
IC4003	NJM4558M	IC	1	
IC4004	BA301	IC	1	
IC4005,06	LM318N	IC	2	
IC4007	MN6631A	IC	1	
IC4008	LM318N	IC	1	
IC4009	NJM5532MD	IC	1	
IC4010	MN6631A	IC	1	
IC4011	NJM4558M	IC	1	
IC4012	M5206P	IC	1	
IC4013,14	NJM4558M	IC	2	
IC4015	AN6558S	IC	1	
IC4016,17	NJM4558M	IC	2	
IC4018	UPC451G	IC	1	
IC4019	UPC339G2	IC	1	
IC4020	MC14012BF	IC	1	
L4001-03	VLQEL05S471J	COIL 470UH	3	
L4004	VLQ0228	COIL	1	
L4005	VLQEL05S471J	COIL 470UH	1	
L4006	VLQ0228	COIL	1	
L4007	VLQEL05S471J	COIL 470UH	1	
L4008	VLQ0228	COIL	1	
L4009-11	VLQEL05S471J	COIL 470UH	3	
P205,06	VJP3151	CONNECTOR (MALE)	2	
P4001	VJP1243T	CONNECTOR (MALE)	1	
P4002	VJP1243G	CONNECTOR (MALE)	1	
P4003	VJP1243R	CONNECTOR (MALE)	1	
P4004	VJP1243T	CONNECTOR (MALE)	1	
P4005	VJP1243G	CONNECTOR (MALE)	1	
Q4001	2SC1847	TRANSISTOR	1	
Q4002	2SD601-R	TRANSISTOR	1	
Q4003	2SB709-R	TRANSISTOR	1	
Q4004,05	UN2213	TRANSISTOR	2	
Q4006	2SD601-R	TRANSISTOR	1	

Ref.No.	Part No.	Part Name & Description	Pcs	Remarks
Q4007	2SC1318A-R	TRANSISTOR	1	
Q4008	2SB709-R	TRANSISTOR	1	
Q4009	UN2213	TRANSISTOR	1	
Q4010	2SB709-R	TRANSISTOR	1	
Q4011	2SC1318A-R	TRANSISTOR	1	
Q4012,13	2SC2497A-R	TRANSISTOR	2	
Q4014,15	2SB709-R	TRANSISTOR	2	
Q4016	2SC1318A-R	TRANSISTOR	1	
Q4017,18	2SC2497A-R	TRANSISTOR	2	
Q4019,20	2SC2925	TRANSISTOR	2	
Q4021,22	2SB709-R	TRANSISTOR	2	
Q4023	2SC1318A-R	TRANSISTOR	1	
Q4024,25	2SC2497A-R	TRANSISTOR	2	
Q4026,27	2SC2925	TRANSISTOR	2	
Q4028,29	2SB709-R	TRANSISTOR	2	
Q4030	2SC1318A-R	TRANSISTOR	1	
Q4031,32	2SC2497A-R	TRANSISTOR	2	
Q4033,34	2SC2925	TRANSISTOR	2	
Q4035	2SB709-R	TRANSISTOR	1	
Q4036-38	2SC1318A-R	TRANSISTOR	3	
Q4039	2SB709-R	TRANSISTOR	1	
Q4040-42	2SC1318A-R	TRANSISTOR	3	
Q4043,44	UN2213	TRANSISTOR	2	
Q4045	2SD601-R	TRANSISTOR	1	
Q4046	UN2213	TRANSISTOR	1	
Q4047	2SD601-R	TRANSISTOR	1	
Q4048	2SD602-R	TRANSISTOR	1	
Q4049	2SB710-R	TRANSISTOR	1	
Q4050	2SD601-R	TRANSISTOR	1	
Q4051,52	2SD1149-R	TRANSISTOR	2	
Q4053	2SA1018-R	TRANSISTOR	1	
Q4054	2SD601-R	TRANSISTOR	1	
Q4055	UN2213	TRANSISTOR	1	
Q4056,57	2SD601-R	TRANSISTOR	2	
Q4058	UN2213	TRANSISTOR	1	
Q4059	2SD601-R	TRANSISTOR	1	
Q4060	UN2113	TRANSISTOR	1	
Q4061	UN2213	TRANSISTOR	1	
Q4062,63	2SD602-R	TRANSISTOR	2	
Q4064,65	2SB710-R	TRANSISTOR	2	
Q4066,67	2SD601-R	TRANSISTOR	2	
Q4068,69	2SD1149-R	TRANSISTOR	2	
Q4070	2SA1018-R	TRANSISTOR	1	
Q4071	2SK146	TRANSISTOR	1	
Q4072-75	UN2213	TRANSISTOR	4	
Q4076	2SD601-R	TRANSISTOR	1	
Q4077	2SB709-R	TRANSISTOR	1	
Q4078	UN2213	TRANSISTOR	1	
Q4080	MSD601-R	TRANSISTOR	1	
Q4081-84	2SD601-R	TRANSISTOR	4	
Q4086	UN2213	TRANSISTOR	1	
Q4091,92	2SC1318A-R	TRANSISTOR	2	
		RESISTORS		
R4001	ERJ6GEYJ331	M.RESISTOR CH1/10W 330	1	
R4002	ERJ6GEYJ223	M.RESISTOR CH1/10W 22K	1	
R4003,04	ERJ6GEYJ562	M.RESISTOR CH1/10W 5.6K	2	
R4005	ERJ6GEYJ332	M.RESISTOR CH1/10W 3.3K	1	
R4006	ERJ6GEYJ392	M.RESISTOR CH1/10W 3.9K	1	
R4007,08	ERJ6GEYJ103	M.RESISTOR CH1/10W 10K	2	
R4009	ERJ6GEYF333	M.RESISTOR CH1/10W 33K	1	
R4010	ERJ6GEYJ101	M.RESISTOR CH1/10W 100	1	
R4011	ERJ6GEYJ274	M.RESISTOR CH1/10W 270K	1	
R4012,13	ERJ6GEYJ223	M.RESISTOR CH1/10W 22K	2	
R4014,15	ERJ6GEYJ683	M.RESISTOR CH1/10W 68K	2	
R4016,17	ERJ6GEYJ103	M.RESISTOR CH1/10W 10K	2	
R4018	ERJ6GEYJ222	M.RESISTOR CH1/10W 2.2K	1	
R4019	ERJ6GEYJ103	M.RESISTOR CH1/10W 10K	1	
R4020	ERJ6GEYG153	M.RESISTOR CH1/10W 15K	1	
R4021	ERJ6GEYJ332	M.RESISTOR CH1/10W 3.3K	1	
R4022,23	ERJ6GEYJ220	M.RESISTOR CH1/10W 22	2	
R4024,25	ERJ6GEYJ104	M.RESISTOR CH1/10W 100K	2	
R4026	ERJ6GEYJ103	M.RESISTOR CH1/10W 10K	1	

Ref.No.	Part No.	Part Name & Description	Pcs	Remarks
R4027	ERG12SJ100	M.RESISTOR 1/2W 10	1	
R4028	ERDS2TJ1R0	C.RESISTOR 1/4W 1.0	1	
R4029	ERJ6GEYJ222	M.RESISTOR CH1/10W 2.2K	1	
R4030	ERJ6GEYJ103	M.RESISTOR CH1/10W 10K	1	
R4031	ERJ6GEYJ682	M.RESISTOR CH1/10W 6.8K	1	
R4032	ERJ6GEYG153	M.RESISTOR CH1/10W 15K	1	
R4033	ERJ6GEYJ272	M.RESISTOR CH1/10W 2.7K	1	
R4034,35	ERJ6GEYJ220	M.RESISTOR CH1/10W 22	2	
R4036,37	ERJ6GEYJ104	M.RESISTOR CH1/10W 100K	2	
R4038	ERJ6GEYJ103	M.RESISTOR CH1/10W 10K	1	
R4039	ERJ6GEYF472	M.RESISTOR CH1/10W 4.7K	1	
R4040	ERG12SJ100	M.RESISTOR 1/2W 10	1	
R4041	ERJ6GEYJ102	M.RESISTOR CH1/10W 1K	1	
R4042,43	ERJ6GEYJ222	M.RESISTOR CH1/10W 2.2K	2	
R4044	ERDS2TJ1R0	C.RESISTOR 1/4W 1.0	1	
R4045	ERJ6GEYJ222	M.RESISTOR CH1/10W 2.2K	1	
R4046	ERJ6GEYJ103	M.RESISTOR CH1/10W 10K	1	
R4047	ERJ6GEYJ682	M.RESISTOR CH1/10W 6.8K	1	
R4048	ERJ6GEYG153	M.RESISTOR CH1/10W 15K	1	
R4049	ERJ6GEYJ272	M.RESISTOR CH1/10W 2.7K	1	
R4050,51	ERJ6GEYJ220	M.RESISTOR CH1/10W 22	2	
R4052,53	ERJ6GEYJ104	M.RESISTOR CH1/10W 100K	2	
R4054	ERJ6GEYJ103	M.RESISTOR CH1/10W 10K	1	
R4055	ERJ6GEYF472	M.RESISTOR CH1/10W 4.7K	1	
R4056	ERG12SJ100	M.RESISTOR 1/2W 10	1	
R4057	ERJ6GEYJ102	M.RESISTOR CH1/10W 1K	1	
R4058,59	ERJ6GEYJ222	M.RESISTOR CH1/10W 2.2K	2	
R4060	ERDS2TJ1R0	C.RESISTOR 1/4W 1.0	1	
R4061	ERJ6GEYJ222	M.RESISTOR CH1/10W 2.2K	1	
R4062	ERJ6GEYJ103	M.RESISTOR CH1/10W 10K	1	
R4063	ERJ6GEYJ682	M.RESISTOR CH1/10W 6.8K	1	
R4064	ERJ6GEYG153	M.RESISTOR CH1/10W 15K	1	
R4065	ERJ6GEYJ272	M.RESISTOR CH1/10W 2.7K	1	
R4066,67	ERJ6GEYJ220	M.RESISTOR CH1/10W 22	2	
R4068,69	ERJ6GEYJ104	M.RESISTOR CH1/10W 100K	2	
R4070	ERJ6GEYJ103	M.RESISTOR CH1/10W 10K	1	
R4071	ERJ6GEYF472	M.RESISTOR CH1/10W 4.7K	1	
R4072	ERG12SJ100	M.RESISTOR 1/2W 10	1	
R4073	ERJ6GEYJ102	M.RESISTOR CH1/10W 1K	1	
R4074,75	ERJ6GEYJ222	M.RESISTOR CH1/10W 2.2K	2	
R4076	ERDS2TJ1R0	C.RESISTOR 1/4W 1.0	1	
R4077	ERJ6GEYJ222	M.RESISTOR CH1/10W 2.2K	1	
R4078	ERJ6GEYJ103	M.RESISTOR CH1/10W 10K	1	
R4079	ERJ6GEYJ682	M.RESISTOR CH1/10W 6.8K	1	
R4080	ERJ6GEYG153	M.RESISTOR CH1/10W 15K	1	
R4081	ERJ6GEYJ272	M.RESISTOR CH1/10W 2.7K	1	
R4084,85	ERJ6GEYJ154	M.RESISTOR CH1/10W 150K	2	
R4086	ERJ6GEYJ103	M.RESISTOR CH1/10W 10K	1	
R4087	ERJ6GEYJ152	M.RESISTOR CH1/10W 1.5K	1	
R4088	ERG12SJ330	M.RESISTOR 1/2W 33	1	
R4089	ERJ6GEYJ222	M.RESISTOR CH1/10W 2.2K	1	
R4090	ERJ6GEYJ103	M.RESISTOR CH1/10W 10K	1	
R4091	ERJ6GEYJ682	M.RESISTOR CH1/10W 6.8K	1	
R4092	ERJ6GEYG153	M.RESISTOR CH1/10W 15K	1	
R4093	ERJ6GEYJ272	M.RESISTOR CH1/10W 2.7K	1	
R4094,95	ERJ6GEYJ220	M.RESISTOR CH1/10W 22	2	
R4096,97	ERJ6GEYJ154	M.RESISTOR CH1/10W 150K	2	
R4098	ERJ6GEYJ103	M.RESISTOR CH1/10W 10K	1	
R4099	ERJ6GEYJ152	M.RESISTOR CH1/10W 1.5K	1	
R4100	ERG12SJ330	M.RESISTOR 1/2W 33	1	
R4101,02	ERJ6GEYJ394	M.RESISTOR CH1/10W 390K	2	
R4103	ERJ6GEYJ102	M.RESISTOR CH1/10W 1K	1	
R4104,05	ERJ6GEYJ563	M.RESISTOR CH1/10W 56K	2	
R4106-08	ERJ6GEYJ103	M.RESISTOR CH1/10W 10K	3	
R4109	ERJ6GEYJ392	M.RESISTOR CH1/10W 3.9K	1	
R4110	ERJ6GEYJ223	M.RESISTOR CH1/10W 22K	1	
R4111	ERJ6GEYJ103	M.RESISTOR CH1/10W 10K	1	
R4112,13	ERJ6GEYJ331	M.RESISTOR CH1/10W 330	2	
R4114	ERJ6GEYJ223	M.RESISTOR CH1/10W 22K	1	
R4115	ERJ6GEYJ392	M.RESISTOR CH1/10W 3.9K	1	
R4116	ERJ6GEYJ223	M.RESISTOR CH1/10W 22K	1	
R4117	ERJ6GEYJ103	M.RESISTOR CH1/10W 10K	1	
R4118	ERJ6GEYJ682	M.RESISTOR CH1/10W 6.8K	1	
R4119	ERJ6GEYJ272	M.RESISTOR CH1/10W 2.7K	1	
R4120	ERJ6GEYJ562	M.RESISTOR CH1/10W 5.6K	1	

Ref.No.	Part No.	Part Name & Description	Pcs	Remarks
R4121,22	ERJ6GEYJ103	M.RESISTOR CH1/10W 10K	2	
R4123	ERJ6GEYJ100	M.RESISTOR CH1/10W 10	1	
R4124	ERJ6GEYJ182	M.RESISTOR CH1/10W 1.8K	1	
R4125	ERJ6GEYF472	M.RESISTOR CH1/10W 4.7K	1	
R4126	ERJ6GEYJ561	M.RESISTOR CH1/10W 560	1	
R4127	ERJ6GEYJ101	M.RESISTOR CH1/10W 100	1	
R4128	ERJ6GEYJ332	M.RESISTOR CH1/10W 3.3K	1	
R4129	ERJ6GEYJ473	M.RESISTOR CH1/10W 47K	1	
R4130	ERJ6GEYJ154	M.RESISTOR CH1/10W 150K	1	
R4131	ERJ6GEYJ103	M.RESISTOR CH1/10W 10K	1	
R4132	ERJ6GEYJ561	M.RESISTOR CH1/10W 560	1	
R4133	ERJ6GEYJ102	M.RESISTOR CH1/10W 1K	1	
R4134	ERJ6GEYJ103	M.RESISTOR CH1/10W 10K	1	
R4135	ERJ6GEYG153	M.RESISTOR CH1/10W 15K	1	
R4136	ERJ6GEYF472	M.RESISTOR CH1/10W 4.7K	1	
R4137	ERJ6GEYJ122	M.RESISTOR CH1/10W 1.2K	1	
R4138	ERJ6GEYJ104	M.RESISTOR CH1/10W 100K	1	
R4139,40	ERJ6GEYJ101	M.RESISTOR CH1/10W 100	2	
R4141	ERJ6GEYJ103	M.RESISTOR CH1/10W 10K	1	
R4142	ERJ6GEYF472	M.RESISTOR CH1/10W 4.7K	1	
R4143	ERJ6GEYJ182	M.RESISTOR CH1/10W 1.8K	1	
R4144	ERJ6GEYJ823	M.RESISTOR CH1/10W 82K	1	
R4145,46	ERJ6GEYJ101	M.RESISTOR CH1/10W 100	2	
R4147	ERJ6GEYJ103	M.RESISTOR CH1/10W 10K	1	
R4148	ERJ6GEYJ222	M.RESISTOR CH1/10W 2.2K	1	
R4149	ERJ6GEYF472	M.RESISTOR CH1/10W 4.7K	1	
R4150	ERJ6GEYJ182	M.RESISTOR CH1/10W 1.8K	1	
R4151,52	ERJ6GEYJ101	M.RESISTOR CH1/10W 100	2	
R4153	ERJ6GEYJ103	M.RESISTOR CH1/10W 10K	1	
R4154	ERJ6GEYJ561	M.RESISTOR CH1/10W 560	1	
R4155,56	ERJ6GEYJ103	M.RESISTOR CH1/10W 10K	2	
R4157	ERJ6GEYJ102	M.RESISTOR CH1/10W 1K	1	
R4158,59	ERJ6GEYJ563	M.RESISTOR CH1/10W 56K	2	
R4160	ERJ6GEYJ103	M.RESISTOR CH1/10W 10K	1	
R4161	ERJ6GEYJ392	M.RESISTOR CH1/10W 3.9K	1	
R4162	ERJ6GEYJ223	M.RESISTOR CH1/10W 22K	1	
R4163	ERJ6GEYJ473	M.RESISTOR CH1/10W 47K	1	
R4164	ERJ6GEYJ104	M.RESISTOR CH1/10W 100K	1	
R4165-68	ERJ6GEYJ103	M.RESISTOR CH1/10W 10K	4	
R4169,70	ERJ6GEYJ104	M.RESISTOR CH1/10W 100K	2	
R4171-74	ERJ6GEYJ331	M.RESISTOR CH1/10W 330	4	
R4175-78	VRE0034E472	M.RESISTOR CH 1/10W 4.7K	4	
R4179	ERJ6GEYJ103	M.RESISTOR CH1/10W 10K	1	
R4180-83	VRE0034E472	M.RESISTOR CH 1/10W 4.7K	4	
R4184	ERJ6GEYJ272	M.RESISTOR CH1/10W 2.7K	1	
R4185	ERJ6GEYJ332	M.RESISTOR CH1/10W 3.3K	1	
R4186,87	ERJ6GEYF472	M.RESISTOR CH1/10W 4.7K	2	
R4188	ERJ6GEYJ103	M.RESISTOR CH1/10W 10K	1	
R4189	ERJ6GEYJ332	M.RESISTOR CH1/10W 3.3K	1	
R4190	ERJ6GEYJ221	M.RESISTOR CH1/10W 220	1	
R4191	ERJ6GEYJ822	M.RESISTOR CH1/10W 8.2K	1	
R4192	ERJ6GEYJ682	M.RESISTOR CH1/10W 6.8K	1	
R4193	ERJ6GEYJ473	M.RESISTOR CH1/10W 47K	1	
R4194	ERJ6GEYJ103	M.RESISTOR CH1/10W 10K	1	
R4195	ERJ6GEYJ222	M.RESISTOR CH1/10W 2.2K	1	
R4196	ERJ6GEY0R00	M.RESISTOR CH 1/10W 0	1	
R4197	ERJ6GEYJ103	M.RESISTOR CH1/10W 10K	1	
R4198	ERJ6GEYF472	M.RESISTOR CH1/10W 4.7K	1	
R4199	ERJ6GEYJ103	M.RESISTOR CH1/10W 10K	1	
R4200	ERJ6GEYF472	M.RESISTOR CH1/10W 4.7K	1	
R4201	ERJ6GEYJ102	M.RESISTOR CH1/10W 1K	1	
R4202	ERJ6GEYJ392	M.RESISTOR CH1/10W 3.9K	1	
R4204	ERJ6GEYJ471	M.RESISTOR CH1/10W 470	1	
R4205	ERJ6GEYJ103	M.RESISTOR CH1/10W 10K	1	
R4206	ERJ6GEYJ100	M.RESISTOR CH1/10W 10	1	
R4207	ERJ6GEYJ103	M.RESISTOR CH1/10W 10K	1	
R4208	ERJ6GEYF472	M.RESISTOR CH1/10W 4.7K	1	
R4209	ERJ6GEYJ561	M.RESISTOR CH1/10W 560	1	
R4210	ERJ6GEYJ473	M.RESISTOR CH1/10W 47K	1	
R4211	ERJ6GEYJ103	M.RESISTOR CH1/10W 10K	1	
R4212	ERJ6GEYJ332	M.RESISTOR CH1/10W 3.3K	1	
R4213-15	VRE0034E272	M.RESISTOR CH 1/10W 2.7K	3	
R4216	ERJ6GEYJ470	M.RESISTOR CH1/10W 47	1	
R4217	ERJ6GEYJ104	M.RESISTOR CH1/10W 100K	1	
R4218	ERJ6GEYJ103	M.RESISTOR CH1/10W 10K	1	

Ref.No.	Part No.	Part Name & Description	Pcs	Remarks
R4219,20	ERJ6GEYJ102	M.RESISTOR CH1/10W 1K	2	
R4221	ERJ6GEYJ392	M.RESISTOR CH1/10W 3.9K	1	
R4222,23	ERJ6GEYJ101	M.RESISTOR CH1/10W 100	2	
R4224-27	ERJ6GEYJ103	M.RESISTOR CH1/10W 10K	4	
R4228	ERJ6GEYJ561	M.RESISTOR CH1/10W 560	1	
R4229	ERJ6GEYJ101	M.RESISTOR CH1/10W 100	1	
R4230	ERJ6GEYJ221	M.RESISTOR CH1/10W 220	1	
R4231	ERJ6GEYJ103	M.RESISTOR CH1/10W 10K	1	
R4232	ERJ6GEYJ221	M.RESISTOR CH1/10W 220	1	
R4233	ERJ6GEYJ332	M.RESISTOR CH1/10W 3.3K	1	
R4234	ERJ6GEYJ473	M.RESISTOR CH1/10W 47K	1	
R4235	ERJ6GEYF472	M.RESISTOR CH1/10W 4.7K	1	
R4236	ERJ6GEYJ682	M.RESISTOR CH1/10W 6.8K	1	
R4237	ERJ6GEYJ103	M.RESISTOR CH1/10W 10K	1	
R4238	ERJ6GEYJ272	M.RESISTOR CH1/10W 2.7K	1	
R4239	ERJ6GEYJ332	M.RESISTOR CH1/10W 3.3K	1	
R4240	ERJ6GEYJ102	M.RESISTOR CH1/10W 1K	1	
R4241	ERJ6GEYJ103	M.RESISTOR CH1/10W 10K	1	
R4242	ERJ6GEYJ332	M.RESISTOR CH1/10W 3.3K	1	
R4243	ERJ6GEYJ103	M.RESISTOR CH1/10W 10K	1	
R4244	ERJ6GEYF472	M.RESISTOR CH1/10W 4.7K	1	
R4245	ERJ6GEYJ822	M.RESISTOR CH1/10W 8.2K	1	
R4246	ERJ6GEYJ103	M.RESISTOR CH1/10W 10K	1	
R4247,48	ERJ6GEYJ272	M.RESISTOR CH1/10W 2.7K	2	
R4251,52	ERJ6GEYJ103	M.RESISTOR CH1/10W 10K	2	
R4253	ERJ6GEYJ272	M.RESISTOR CH1/10W 2.7K	1	
R4254	ERJ6GEYG153	M.RESISTOR CH1/10W 15K	1	
R4255	ERJ6GEYJ221	M.RESISTOR CH1/10W 220	1	
R4256	ERJ6GEYJ222	M.RESISTOR CH1/10W 2.2K	1	
R4257	ERJ6GEYG153	M.RESISTOR CH1/10W 15K	1	
R4258	ERJ6GEYJ103	M.RESISTOR CH1/10W 10K	1	
R4259	ERJ6GEYJ122	M.RESISTOR CH1/10W 1.2K	1	
R4260	ERJ6GEYJ562	M.RESISTOR CH1/10W 5.6K	1	
R4261	ERJ6GEYJ103	M.RESISTOR CH1/10W 10K	1	
R4262	ERJ6GEYJ272	M.RESISTOR CH1/10W 2.7K	1	
R4263	ERJ6GEYG153	M.RESISTOR CH1/10W 15K	1	
R4264	ERJ6GEYJ221	M.RESISTOR CH1/10W 220	1	
R4265	ERJ6GEYJ222	M.RESISTOR CH1/10W 2.2K	1	
R4266	ERJ6GEYG153	M.RESISTOR CH1/10W 15K	1	
R4267	ERJ6GEYJ562	M.RESISTOR CH1/10W 5.6K	1	
R4268	ERJ6GEYJ103	M.RESISTOR CH1/10W 10K	1	
R4269	ERJ6GEYJ272	M.RESISTOR CH1/10W 2.7K	1	
R4270	ERJ6GEYG153	M.RESISTOR CH1/10W 15K	1	
R4271	ERJ6GEYJ221	M.RESISTOR CH1/10W 220	1	
R4272	ERJ6GEYJ222	M.RESISTOR CH1/10W 2.2K	1	
R4273	ERJ6GEYG153	M.RESISTOR CH1/10W 15K	1	
R4274	ERJ6GEYJ562	M.RESISTOR CH1/10W 5.6K	1	
R4275	ERJ6GEYJ103	M.RESISTOR CH1/10W 10K	1	
R4276	ERJ6GEYJ272	M.RESISTOR CH1/10W 2.7K	1	
R4277	ERJ6GEYG153	M.RESISTOR CH1/10W 15K	1	
R4278	ERJ6GEYJ221	M.RESISTOR CH1/10W 220	1	
R4279	ERJ6GEYJ222	M.RESISTOR CH1/10W 2.2K	1	
R4280	ERJ6GEYG153	M.RESISTOR CH1/10W 15K	1	
R4281	ERJ6GEYJ562	M.RESISTOR CH1/10W 5.6K	1	
R4285	ERJ6GEYJ103	M.RESISTOR CH1/10W 10K	1	
R4291,92	ERJ6GEYJ394	M.RESISTOR CH1/10W 390K	2	
R4293-95	ERJ6GEYJ220	M.RESISTOR CH1/10W 22	3	
R4296	ERJ6GEYJ332	M.RESISTOR CH1/10W 3.3K	1	
R4301	ERDS2TJ681	C.RESISTOR 1/4W 680	1	
T4001	VLT0540	TRANSFORMER	1	
T4002-05	VLT0302	TRANSFORMER	4	
T4006	VLT0304	TRANSFORMER	1	
T4007	VLT0303	TRANSFORMER	1	
T4008	VLT0545	TRANSFORMER	1	
TP4001-18	VJR0646	TEST POINT	18	
TPG4001-05	VJR0646	TEST POINT	5	

S4

S4 AT VEP82065D
S4 SUB VEP82078A

Ref.No.	Part No.	Part Name & Description	Pcs	Remarks
VR4001	VRV0109B103	V.RESISTOR 10K	1	
VR4002,03	VRV0109B104	V.RESISTOR 100K	2	
VR4004,05	VRV0109B103	V.RESISTOR 10K	2	
VR4006,07	VRV0109B502	V.RESISTOR 5K	2	
VR4008	VRV0109B103	V.RESISTOR 10K	1	
VR4009,10	VRV0109B502	V.RESISTOR 5K	2	
VR4011-13	VRV0109B103	V.RESISTOR 10K	3	
VR4014	VRV0109B501	V.RESISTOR 500	1	
		MISCELLANEOUS		
	VGQ0291	P.C.BOARD NAME PLATE	1	
	VML2143	CARD PULLER	1	
	VML2144	CARD PULLER	1	
	VXA4420	P.C.BOARD SHIELD PLATE	1	
	XNG26E	NUT	4	
	XTV3+6FFR	SCREW	5	
	XYN26+C12	SCREW	4	
	VEP82065D	P.C.BOARD W/COMPONENT		
		S4 AT		
	VEP82078A	P.C.BOARD W/COMPONENT		FOR VEP82065D
		S4 SUB		
		CAPACITORS		
C2601	ECQP1H101JZ	P.CAPACITOR 50V 100P	1	
C2602	ECUM1H103KBN	C.CAPACITOR CH 50V 0.01U	1	
C2603,04	ECUM1H330JCN	C.CAPACITOR CH 50V 33P	2	
C2605	ECUM1H102JCN	C.CAPACITOR CH 50V 1000P	1	
C2606-08	ECUM1H104KBM	C.CAPACITOR CH 50V 0.1U	3	
C2609,10	ECUM1H121JCN	C.CAPACITOR CH 50V 120P	2	
C2611	ECCF1H090DC	C.CAPACITOR 50V 9P	1	
C2612,13	ECUM1H104KBM	C.CAPACITOR CH 50V 0.1U	2	
C2614	ECUM1H103KBN	C.CAPACITOR CH 50V 0.01U	1	
C2615	ECA1HXLV330	E.CAPACITOR 50V 33U	1	
C2616	ECUM1H103KBN	C.CAPACITOR CH 50V 0.01U	1	
C2617	ECUM1H151JCN	C.CAPACITOR CH 50V 150P	1	
C2618,19	ECUM1H102JCN	C.CAPACITOR CH 50V 1000P	2	
C2620,21	ECUM1H151JCN	C.CAPACITOR CH 50V 150P	2	
C2622	ECKF1H103KB	C.CAPACITOR 50V 0.01U	1	
C2623,24	ECUM1H103KBN	C.CAPACITOR CH 50V 0.01U	2	
C2625	ECA1HXLV010	E.CAPACITOR 50V 1U	1	
C2626-31	ECA1HXLV330	E.CAPACITOR 50V 33U	6	
C2632	ECUM1H103KBN	C.CAPACITOR CH 50V 0.01U	1	
C2633	ECA1HXLV100	E.CAPACITOR 50V 10U	1	
C2634	ECA1HXLV330	E.CAPACITOR 50V 33U	1	
C2635-37	ECUM1H472KBN	C.CAPACITOR CH 50V 4700P	3	
C2640,41	ECUM1H104KBM	C.CAPACITOR CH 50V 0.1U	2	
C2642-49	ECUM1H223KBN	C.CAPACITOR CH 50V 0.022U	8	
C2650,51	ECUM1E473KBN	C.CAPACITOR CH 25V 0.047U	2	
C2652,53	ECUM1H220JCN	C.CAPACITOR CH 50V 22P	2	
C2654	ECUM1H103KBN	C.CAPACITOR CH 50V 0.01U	1	
C2655	ECA1HXLV100	E.CAPACITOR 50V 10U	1	
C2656	ECA1HXLV330	E.CAPACITOR 50V 33U	1	
C2657-60	ECUM1H273KBN	C.CAPACITOR CH 50V 0.027U	4	
C2661,62	ECUM1H123KBN	C.CAPACITOR CH 50V 0.012U	2	
C2663,64	ECUM1H683KBM	C.CAPACITOR CH 50V 0.068U	2	
C2665,66	ECUM1H104ZFN	C.CAPACITOR CH 50V 0.1U	2	
C2667-70	ECUM1H391JCN	C.CAPACITOR CH 50V 390P	4	
C2671-83	ECUM1H104KBM	C.CAPACITOR CH 50V 0.1U	13	
C2684,85	ECUM1H104ZFN	C.CAPACITOR CH 50V 0.1U	2	
C2686-91	ECUM1H103KBN	C.CAPACITOR CH 50V 0.01U	6	
C2696,97	ECUM1H104KBM	C.CAPACITOR CH 50V 0.1U	2	
C2698,99	ECA1HXLV100	E.CAPACITOR 50V 10U	2	
C2700-02	ECA1HXLV330	E.CAPACITOR 50V 33U	3	
C2703	ECUM1H103KBN	C.CAPACITOR CH 50V 0.01U	1	

Ref.No.	Part No.	Part Name & Description	Pcs	Remarks
C2704,05	ECA1HXLV330	E.CAPACITOR 50V 33U	2	
C2706	ECUM1H103KBN	C.CAPACITOR CH 50V 0.01U	1	
C2707-12	ECUM1H104KBM	C.CAPACITOR CH 50V 0.1U	6	
C2713-17	ECUM1H103KBN	C.CAPACITOR CH 50V 0.01U	5	
C2718,19	ECA1HXLV100	E.CAPACITOR 50V 10U	2	
C2720,21	ECUM1H103KBN	C.CAPACITOR CH 50V 0.01U	2	
C2722	ECA1HXLV100	E.CAPACITOR 50V 10U	1	
C2722	ECQB1H273JF	P.CAPACITOR 50V 0.027U	1	
C2723,24	ECUM1H103KBN	C.CAPACITOR CH 50V 0.01U	2	
C2725,26	ECA1HXNV010	E.CAPACITOR 50V 1U	2	
C2727-29	ECUM1H104KBM	C.CAPACITOR CH 50V 0.1U	3	
D2601-06	MA157	DIODE	6	
D2607-10	LN25RP	DIODE	4	
D2611-14	MA3039-H	DIODE	4	
D2615-22	MA157	DIODE	8	
D2623,24	MA3039-H	DIODE	2	
D2625,26	MA151K	DIODE	2	
D2627	MA151WA	DIODE	1	
D2628,29	MA151K	DIODE	2	
IC2601	MC74HC4538A	IC	1	
IC2602,03	DAC1220LCN	IC	2	
IC2604	UPC4074G	IC	1	
IC2605	UPC4741G2	IC	1	
IC2606	MC10125L	IC	1	
IC2607	NE564D	IC	1	
IC2608	74AC74SJ	IC	1	
IC2609	MC74HCU04F	IC	1	
IC2610	MN53030VPT	IC	1	
IC2611	VSI0894B	IC	1	
IC2612	MC74HC161AF	IC	1	
IC2613	MSM5210RS	IC	1	
IC2614	UPC4741G2	IC	1	
IC2615	MSM5210RS	IC	1	
IC2616	MC74HC86F	IC	1	
IC2617	UPC4558G2	IC	1	
IC2618	MN188166VHI5	IC	1	
IC2619	M51951BML	IC	1	
IC2620,21	UPC4074G	IC	2	
IC2622	TL431CLP	DIODE	1	
IC2623	UPC4558G2	IC	1	
IC2624	UPC4741G2	IC	1	
IC2625,26	UPD4053BG	IC	2	
IC2627-30	UPC4741G2	IC	4	
IC2631,32	UPC4572G2	IC	2	
IC2633	UPC4741G2	IC	1	
IC2634,35	UPD4051BG	IC	2	
IC2636-38	TC74HC193AF	IC	3	
IC2640	MC74HC244AF	IC	1	
IC2641	MC74HC00AF	IC	1	
IC2642	74AC74SJ	IC	1	
IC2643	UPC4558G2	IC	1	
IC2644	MC74HC08AF	IC	1	
IC2645,46	MC74HC4050F	IC	2	
IC2647	CD74AC00M	IC	1	
IC2648-51	UPC4558G2	IC	4	
IC2652,53	UPC393G2	IC	2	
IC2654	MC74HC08AF	IC	1	
IC2655	MC74HC74AF	IC	1	
IC2656	MC74HC27F	IC	1	
IC2657	VSI1085F	IC	1	
IC2658	MB8464A80LFF	IC	1	
IC2659	VSI0896	IC	1	
IC2660,61	MC74HC257F	IC	2	
IC2662	VSI0897	IC	1	
IC2663,64	MC74HC574AF	IC	2	
IC2665-68	MC74HC273AF	IC	4	
IC2669-72	MC74HC85F	IC	4	
IC2673	VSI0895A	IC	1	
IC2674-76	TC74HC283AF	IC	3	

Ref.No.	Part No.	Part Name & Description	Pcs	Remarks
IC2677-79	MC74HC157AF	IC	3	
IC2680	MC74HC04AF	IC	1	
IC2681	AN78L05	IC	1	
IC2682,83	UPC4741G2	IC	2	
IC2684	UPD4053BG	IC	1	
IC2685	UPC4558G2	IC	1	
IC2686	AN79L05	IC	1	
IC2687,88	MC74HC4053F	IC	2	
IC2689,90	UPC4082G2	IC	2	
IC2691	MC74HC4538A	IC	1	
IC2692	MC74HC02AF	IC	1	
ICS2611	VJS3096328	CONNECTOR (FEMALE)	1	
ICS2657	VJS2726	CONNECTOR (FEMALE)	1	
ICS2659	VJS3096328	CONNECTOR (FEMALE)	1	
ICS2662	VJS3096328	CONNECTOR (FEMALE)	1	
ICS2673	VJS3096328	CONNECTOR (FEMALE)	1	
L2601	VLQ0128	COIL	1	
L2602	VLQEL05S101K	COIL 100UH	1	
L2603	VLQ0128	COIL	1	
L2604-06	VLQEL05S101K	COIL 100UH	3	
P2207,08	VJP3151	CONNECTOR (MALE)	2	
P2602	VJS1435	CONNECTOR (FEMALE)	1	
Q2601-04	UN2213	TRANSISTOR	4	
Q2605,06	MSB709-R	TRANSISTOR	2	
Q2607,08	MSD601-R	TRANSISTOR	2	
		RESISTORS		
R2601	ERDS2TJ103	C.RESISTOR 1/4W 10K	1	
R2602	ERJ6GEYJ105	M.RESISTOR CH1/10W 1M	1	
R2603	ERJ6GEYJ102	M.RESISTOR CH1/10W 1K	1	
R2604	ERJ6GEYJ221	M.RESISTOR CH1/10W 220	1	
R2605	ERJ6GEYJ331	M.RESISTOR CH1/10W 330	1	
R2606,07	ERJ6GEYF472	M.RESISTOR CH1/10W 4.7K	2	
R2608	ERJ6GEYJ222	M.RESISTOR CH1/10W 2.2K	1	
R2609,10	ERJ6GEYJ101	M.RESISTOR CH1/10W 100	2	
R2611	VRE0034E100	M.RESISTOR CH 1/10W 10	1	
R2612	VRE0034E102	M.RESISTOR CH 1/10W 1K	1	
R2613-16	VRE0034E273	M.RESISTOR CH 1/10W 27K	4	
R2619,20	ERJ6GEYJ104	M.RESISTOR CH1/10W 100K	2	
R2621,22	ERJ6GEYJ223	M.RESISTOR CH1/10W 22K	2	
R2623,24	ERJ6GEYJ183	M.RESISTOR CH1/10W 18K	2	
R2625	ERJ6GEYJ561	M.RESISTOR CH1/10W 560	1	
R2630	ERJ6GEYJ102	M.RESISTOR CH1/10W 1K	1	
R2631	VRE0034E222	M.RESISTOR CH 1/10W 2.2K	1	
R2632,33	VRE0034E332	M.RESISTOR CH 1/10W 3.3K	2	
R2636-39	VRE0034E273	M.RESISTOR CH 1/10W 27K	4	
R2642,43	VRE0034E273	M.RESISTOR CH 1/10W 27K	2	
R2646,47	VRE0034E273	M.RESISTOR CH 1/10W 27K	2	
R2648	ERJ6GEYJ101	M.RESISTOR CH1/10W 100	1	
R2652-54	VRE0034E561	M.RESISTOR CH 1/10W 560	3	
R2655-57	VRE0034E564	M.RESISTOR CH 1/10W 560K	3	
R2658	VRE0034E333	M.RESISTOR CH 1/10W 33K	1	
R2659	VRE0034E564	M.RESISTOR CH 1/10W 560K	1	
R2660	VRE0034E333	M.RESISTOR CH 1/10W 33K	1	
R2661,62	VRE0034E154	M.RESISTOR CH 1/10W 150K	2	
R2663,64	VRE0034E224	M.RESISTOR CH 1/10W 220K	2	
R2665	ERJ6GEYJ272	M.RESISTOR CH1/10W 2.7K	1	
R2666	ERJ6GEYJ224	M.RESISTOR CH1/10W 220K	1	
R2667	ERJ6GEYJ272	M.RESISTOR CH1/10W 2.7K	1	
R2668,69	VRE0034E224	M.RESISTOR CH 1/10W 220K	2	
R2670	ERJ6GEYJ272	M.RESISTOR CH1/10W 2.7K	1	
R2671	ERJ6GEYJ224	M.RESISTOR CH1/10W 220K	1	
R2672	ERJ6GEYJ272	M.RESISTOR CH1/10W 2.7K	1	
R2673,74	ERJ6GEYJ331	M.RESISTOR CH1/10W 330	2	

Ref.No.	Part No.	Part Name & Description	Pcs	Remarks
R2675	ERJ6GEYJ103	M.RESISTOR CH1/10W 10K	1	
R2676,77	ERJ6GEYJ223	M.RESISTOR CH1/10W 22K	2	
R2678-81	VRE0034E103	M.RESISTOR CH 1/10W 10K	4	
R2682,83	ERJ6GEYJ823	M.RESISTOR CH1/10W 82K	2	
R2685	VRE0034E394	M.RESISTOR CH 1/10W 390K	1	
R2687	VRE0034E394	M.RESISTOR CH 1/10W 390K	1	
R2688,89	VRE0034E153	M.RESISTOR CH 1/10W 15K	2	
R2690,91	VRE0034E103	M.RESISTOR CH 1/10W 10K	2	
R2694-99	VRE0034E153	M.RESISTOR CH 1/10W 15K	6	
R2708,09	VRE0034E223	M.RESISTOR CH 1/10W 22K	2	
R2710,11	VRE0034E303	M.RESISTOR CH 1/10W 30K	2	
R2712,13	VRE0034E123	M.RESISTOR CH 1/10W 12K	2	
R2714,15	VRE0034E273	M.RESISTOR CH 1/10W 27K	2	
R2716,17	VRE0034E472	M.RESISTOR CH 1/10W 4.7K	2	
R2718-23	VRE0034E912	M.RESISTOR CH 1/10W 9.1K	6	
R2724-47	VRE0034E273	M.RESISTOR CH 1/10W 27K	24	
R2748	ERJ6GEYJ272	M.RESISTOR CH1/10W 2.7K	1	
R2749	ERJ6GEYJ154	M.RESISTOR CH1/10W 150K	1	
R2750	ERJ6GEYJ272	M.RESISTOR CH1/10W 2.7K	1	
R2751-56	VRE0034E273	M.RESISTOR CH 1/10W 27K	6	
R2757	ERJ6GEYJ272	M.RESISTOR CH1/10W 2.7K	1	
R2758	ERJ6GEYJ154	M.RESISTOR CH1/10W 150K	1	
R2759	ERJ6GEYJ272	M.RESISTOR CH1/10W 2.7K	1	
R2767,68	VRE0034E123	M.RESISTOR CH 1/10W 12K	2	
R2769,70	VRE0034E103	M.RESISTOR CH 1/10W 10K	2	
R2771,72	VRE0034E473	M.RESISTOR CH 1/10W 47K	2	
R2773,74	VRE0034E471	M.RESISTOR CH 1/10W 470	2	
R2775-78	VRE0034E243	M.RESISTOR CH 1/10W 24K	4	
R2779,80	VRE0034E302	M.RESISTOR CH 1/10W 3K	2	
R2783-86	VRE0034E273	M.RESISTOR CH 1/10W 27K	4	
R2787,88	VRE0034E102	M.RESISTOR CH 1/10W 1K	2	
R2789,90	VRE0034E104	M.RESISTOR CH 1/10W 100K	2	
R2791,92	VRE0034E272	M.RESISTOR CH 1/10W 2.7K	2	
R2793,94	VRE0034E562	M.RESISTOR CH 1/10W 5.6K	2	
R2795,96	VRE0034E472	M.RESISTOR CH 1/10W 4.7K	2	
R2797,98	VRE0034E392	M.RESISTOR CH 1/10W 3.9K	2	
R2799,00	VRE0034E562	M.RESISTOR CH 1/10W 5.6K	2	
R2801,02	ERJ6GEYJ101	M.RESISTOR CH1/10W 100	2	
R2803-06	VRE0034E273	M.RESISTOR CH 1/10W 27K	4	
R2807	ERJ6GEYJ154	M.RESISTOR CH1/10W 150K	1	
R2808-11	ERJ6GEYJ273	M.RESISTOR CH1/10W 27K	4	
R2812	ERJ6GEYJ154	M.RESISTOR CH1/10W 150K	1	
R2813,14	ERJ6GEYJ273	M.RESISTOR CH1/10W 27K	2	
R2815,16	ERJ6GEYJ331	M.RESISTOR CH1/10W 330	2	
R2818	ERJ6GEYJ273	M.RESISTOR CH1/10W 27K	1	
R2820-24	ERJ6GEYJ273	M.RESISTOR CH1/10W 27K	5	
R2825,26	ERJ6GEYJ331	M.RESISTOR CH1/10W 330	2	
R2827	ERJ6GEYJ103	M.RESISTOR CH1/10W 10K	1	
R2828,29	VRE0034E273	M.RESISTOR CH 1/10W 27K	2	
R2830,31	ERJ6GEYJ103	M.RESISTOR CH1/10W 10K	2	
R2832,33	ERJ6GEYJ473	M.RESISTOR CH1/10W 47K	2	
R2834,35	ERJ6GEYJ103	M.RESISTOR CH1/10W 10K	2	
R2836,37	ERJ6GEYJ473	M.RESISTOR CH1/10W 47K	2	
R2838-41	ERJ6GEYJ103	M.RESISTOR CH1/10W 10K	4	
R2842-45	VRE0034E223	M.RESISTOR CH 1/10W 22K	4	
R2846-49	VRE0034E273	M.RESISTOR CH 1/10W 27K	4	
R2850,51	VRE0034E274	M.RESISTOR CH 1/10W 270K	2	
R2852,53	VRE0034E333	M.RESISTOR CH 1/10W 33K	2	
R2854	ERJ6GEYJ104	M.RESISTOR CH1/10W 100K	1	
R2857	ERJ6GEYJ154	M.RESISTOR CH1/10W 150K	1	
R2858,59	ERJ6GEYJ104	M.RESISTOR CH1/10W 100K	2	
R2860-63	ERJ6GEYJ331	M.RESISTOR CH1/10W 330	4	
R2864-67	VRE0034E223	M.RESISTOR CH 1/10W 22K	4	
R2868,69	VRE0034E272	M.RESISTOR CH 1/10W 2.7K	2	
RA2601	EXBLD8103G	COMBI.R-R 10K	1	
RA2602	EXBF9E103J	COMBI.R-R 10K	1	
RA2603	EXBF8E103J	COMBI.R-R 10K	1	
RA2604	VCR0202	RESISTOR ARRAY	1	
SW2601	VSS0207	SWITCH	1	

Ref.No.	Part No.	Part Name & Description	Pcs	Remarks
TP2601-07	VJR0646	TEST POINT	7	
TP2609-33	VJR0646	TEST POINT	25	
TPG2601,02	VJR0646	TEST POINT	2	
TPG2604	VJR0646	TEST POINT	1	
VR2601,02	VRV0109B502	V.RESISTOR 5K	2	
VR2603,04	VRV0109B203	V.RESISTOR 20K	2	
VR2605-10	VRV0064B203	V.RESISTOR 20K	6	
VR2611,12	VRV0064B103	V.RESISTOR 10K	2	
VR2613,14	VRV0109B102	V.RESISTOR 1K	2	
VR2615,16	VRV0109B202	V.RESISTOR 2K	2	
VR2617,18	VRV0064B503	V.RESISTOR 50K	2	
VR2619-22	VRV0109B103	V.RESISTOR 10K	4	
X2601	VSX0150	CRYSTAL OSCILLATOR	1	
		MISCELLANEOUS		
	VGQ0291	P.C.BOARD NAME PLATE	1	
	VML2143	CARD PULLER	1	
	VML2144	CARD PULLER	1	
	VXA4420	P.C.BOARD SHIELD PLATE	1	
	XNG26E	NUT	4	
	XTV3+6FFR	SCREW	5	
	XYN26+C12	SCREW	4	
	VJP1435	CONNECTOR (MALE)	1	

Ref.No.	Part No.	Part Name & Description	Pcs	Remarks

S5 SERVO VEP82067E
S5 SUB VEP82085B

Ref.No.	Part No.	Part Name & Description	Pcs	Remarks
	VEP82067E	P.C.BOARD W/COMPONENT		
		S5 SERVO		
	VEP82085B	P.C.BOARD W/COMPONENT		
		S5 SUB		
		CAPACITORS		
C2014	ECQB1H103JF	P.CAPACITOR 50V 0.01U	1	
C2018,19	ECA1HXLV010	E.CAPACITOR 50V 1U	2	
C2020	ECA1EXLV330	E.CAPACITOR 25V 33U	1	
C2021	ECUM1H103KBN	C.CAPACITOR CH 50V 0.01U	1	
C2023,24	ECA1CXLV470	E.CAPACITOR 16V 47U	2	
C2025	ECUM1H103KBN	C.CAPACITOR CH 50V 0.01U	1	
C2026	ECA1EXLV220	E.CAPACITOR 25V 22U	1	
C2027	ECUM1H103KBN	C.CAPACITOR CH 50V 0.01U	1	
C2028	ECA1HXLV2R2	E.CAPACITOR 50V 2.2U	1	
C2029	ECA1CXLV470	E.CAPACITOR 16V 47U	1	
C2034,35	ECUM1H103KBN	C.CAPACITOR CH 50V 0.01U	2	
C2036,37	ECUM1H300JCN	C.CAPACITOR CH 50V 30P	2	
C2038	ECUM1H271JCN	C.CAPACITOR CH 50V 270P	1	
C2039	ECUM1H103KBN	C.CAPACITOR CH 50V 0.01U	1	
C2040	ECUM1H271JCN	C.CAPACITOR CH 50V 270P	1	
C2041	ECUM1H103KBN	C.CAPACITOR CH 50V 0.01U	1	
C2042,43	ECA1EXLV330	E.CAPACITOR 25V 33U	2	
C2044	ECUM1H103KBN	C.CAPACITOR CH 50V 0.01U	1	
C2045,46	ECA1EXLV330	E.CAPACITOR 25V 33U	2	
C2047,48	ECUM1H103KBN	C.CAPACITOR CH 50V 0.01U	2	
C2049	ECUM1H152JN	C.CAPACITOR CH 50V 1500P	1	
C2051	ECUM1H152JN	C.CAPACITOR CH 50V 1500P	1	
C2052	ECUM1H151JCN	C.CAPACITOR CH 50V 150P	1	
C2054	ECQB1H103JF	P.CAPACITOR 50V 0.01U	1	
C2058,59	ECA1HXLV010	E.CAPACITOR 50V 1U	2	
C2060	ECA1EXLV330	E.CAPACITOR 25V 33U	1	
C2061	ECUM1H103KBN	C.CAPACITOR CH 50V 0.01U	1	
C2063,64	ECA1CXLV470	E.CAPACITOR 16V 47U	2	
C2065	ECUM1H103KBN	C.CAPACITOR CH 50V 0.01U	1	
C2066,67	ECUM1H560JCN	C.CAPACITOR CH 50V 56P	2	
C2068	ECA1EXLV220	E.CAPACITOR 25V 22U	1	
C2069	ECUM1H103KBN	C.CAPACITOR CH 50V 0.01U	1	
C2070	ECUM1H273KBN	C.CAPACITOR CH 50V 0.027U	1	
C2073	ECUM1H562KBN	C.CAPACITOR CH 50V 5600P	1	
C2074	ECQB1H153JF	P.CAPACITOR 50V 0.015U	1	
C2076	ECQB1H333JF	P.CAPACITOR 50V 0.033U	1	
C2079	ECUM1H562KBN	C.CAPACITOR CH 50V 5600P	1	
C2080	ECUM1H103KBN	C.CAPACITOR CH 50V 0.01U	1	
C2081	ECA1CXLV470	E.CAPACITOR 16V 47U	1	
C2082	ECUM1H103KBN	C.CAPACITOR CH 50V 0.01U	1	
C2083	ECA1CXLV470	E.CAPACITOR 16V 47U	1	
C2084	ECUM1H103KBN	C.CAPACITOR CH 50V 0.01U	1	
C2085	ECA1CXLV470	E.CAPACITOR 16V 47U	1	
C2086	ECUM1H103KBN	C.CAPACITOR CH 50V 0.01U	1	
C2087	ECA1VXLV470	E.CAPACITOR 50V 47U	1	
C2088	ECUM1H103KBN	C.CAPACITOR CH 50V 0.01U	1	
C2089	ECA1CXLV470	E.CAPACITOR 16V 47U	1	
C2090	ECUM1H103KBN	C.CAPACITOR CH 50V 0.01U	1	
C2091	ECA1CXLV470	E.CAPACITOR 16V 47U	1	
C2096	ECA1CXLV470	E.CAPACITOR 16V 47U	1	
C2097	ECA1EXLV101X	E.CAPACITOR 25V 100U	1	
C2098	ECA1CXLV470	E.CAPACITOR 16V 47U	1	
C2099	ECQB1H561JF	P.CAPACITOR 50V 560P	1	
C2101	ECUM1H330JCN	C.CAPACITOR CH 50V 33P	1	
C2102	ECUM1H333KBN	C.CAPACITOR CH 50V 0.033U	1	
C2103	ECUM1H090DCN	C.CAPACITOR CH 50V 9P	1	
C2104	ECA1CXNV100	E.CAPACITOR 16V 10U	1	
C2105	ECQB1H332JF	P.CAPACITOR 50V 3300P	1	
C2106	ECA1CXNV100	E.CAPACITOR 16V 10U	1	
C2107	ECUM1H103KBN	C.CAPACITOR CH 50V 0.01U	1	
C2108,09	ECA1CXLV470	E.CAPACITOR 16V 47U	2	
C2110	ECUM1H103KBN	C.CAPACITOR CH 50V 0.01U	1	
C2111-20	ECUM1E104ZFN	E.CAPACITOR 25V 0.1U	10	
C2121	ECA1CXLV470	E.CAPACITOR 16V 47U	1	

Ref.No.	Part No.	Part Name & Description	Pcs	Remarks
C2130	ECUM1H391JCN	C.CAPACITOR CH 50V 390P	1	
C2131	ECUM1H103KBN	C.CAPACITOR CH 50V 0.01U	1	
C2132	ECUM1H102JCN	C.CAPACITOR CH 50V 1000P	1	
C2133	ECUM1E104ZFN	E.CAPACITOR 25V 0.1U	1	
C2134	ECUM1H101JCN	C.CAPACITOR CH 50V 100P	1	
C2135	ECUM1H102JCN	C.CAPACITOR CH 50V 1000P	1	
C2136	ECUM1H101JCN	C.CAPACITOR CH 50V 100P	1	
C2137	ECUM1E104ZFN	E.CAPACITOR 25V 0.1U	1	
C2138	ECUM1H151JCN	C.CAPACITOR CH 50V 150P	1	
C2142	ECUM1H103KBN	C.CAPACITOR CH 50V 0.01U	1	
C2143	ECA1EXLV101X	E.CAPACITOR 25V 100U	1	
C2144	ECA1EXLV220	E.CAPACITOR 25V 22U	1	
C2145	ECUM1H222JN	C.CAPACITOR CH 50V 2200P	1	
C2146	ECUM1H102JCN	C.CAPACITOR CH 50V 1000P	1	
C2147	ECUM1H103ZFN	C.CAPACITOR CH 50V 0.01U	1	
C2148	ECA1CXLV470	E.CAPACITOR 16V 47U	1	
C2150,51	ECUM1E104ZFN	E.CAPACITOR 25V 0.1U	2	
C2154	ECUM1E104ZFN	E.CAPACITOR 25V 0.1U	1	
C2160	ECA1HXSR47	E.CAPACITOR 50V 0.47U	1	
C2204	ECUM1H220JCN	C.CAPACITOR CH 50V 22P	1	
C2205	ECA1HXLV010	E.CAPACITOR 50V 1U	1	
C2206	ECUM1E104ZFN	E.CAPACITOR 25V 0.1U	1	
C2207	ECUM1H103ZFN	C.CAPACITOR CH 50V 0.01U	1	
C2208,09	ECUM1E104ZFN	E.CAPACITOR 25V 0.1U	2	
C2215	ECUM1H151JCN	C.CAPACITOR CH 50V 150P	1	
C2216	ECA1EXLV220	E.CAPACITOR 25V 22U	1	
C2219	ECUM1E104ZFN	E.CAPACITOR 25V 0.1U	1	
C2220-22	ECA1HXLV100	E.CAPACITOR 50V 10U	3	
C2223	ECA1CXLV470	E.CAPACITOR 16V 47U	1	
C2224,25	ECA1HXLV100	E.CAPACITOR 50V 10U	2	
C2231	ECQB1H394JF	P.CAPACITOR 50V 0.39U	1	
C2232-38	ECUM1H562KBN	C.CAPACITOR CH 50V 5600P	7	
C2241	ECUM1H330JCN	C.CAPACITOR CH 50V 33P	1	
C2242	ECUM1H101JCN	C.CAPACITOR CH 50V 100P	1	
C2243	ECUM1H103KBN	C.CAPACITOR CH 50V 0.01U	1	
C2244,45	ECA1EXLV330	E.CAPACITOR 25V 33U	2	
C2246	ECUM1H103KBN	C.CAPACITOR CH 50V 0.01U	1	
C2247	ECUM1H101JCN	C.CAPACITOR CH 50V 100P	1	
C2248	ECUM1H330JCN	C.CAPACITOR CH 50V 33P	1	
C2249	ECUM1H103KBN	C.CAPACITOR CH 50V 0.01U	1	
C2250,51	ECA1EXLV330	E.CAPACITOR 25V 33U	2	
C2252	ECUM1H101JCN	C.CAPACITOR CH 50V 100P	1	
C2253	ECUM1H330JCN	C.CAPACITOR CH 50V 33P	1	
C2254	ECUM1H103KBN	C.CAPACITOR CH 50V 0.01U	1	
C2255,56	ECA1EXLV330	E.CAPACITOR 25V 33U	2	
C2257	ECUM1H101JCN	C.CAPACITOR CH 50V 100P	1	
C2258	ECUM1H330JCN	C.CAPACITOR CH 50V 33P	1	
C2259	ECUM1H103KBN	C.CAPACITOR CH 50V 0.01U	1	
C2260,61	ECA1EXLV330	E.CAPACITOR 25V 33U	2	
C2263	ECUM1H562KBN	C.CAPACITOR CH 50V 5600P	1	
C2264-68	ECUM1H103KBN	C.CAPACITOR CH 50V 0.01U	5	
C2270	ECUM1H103KBN	C.CAPACITOR CH 50V 0.01U	1	
C2271	ECA1EXLV101X	E.CAPACITOR 25V 100U	1	
C2272-77	ECUM1H103KBN	C.CAPACITOR CH 50V 0.01U	6	
C2278	ECA1EXLV220	E.CAPACITOR 25V 22U	1	
C2347,48	ECUM1H103ZFN	C.CAPACITOR CH 50V 0.01U	2	
C21602	ECA1HXSR47	E.CAPACITOR 50V 0.47U	1	
D2001-04	MA153	DIODE	4	
D2006	MA153	DIODE	1	
D2007	MA151K	DIODE	1	
D2010,11	MA151K	DIODE	2	
D2012	MA153	DIODE	1	
D2014	MA151K	DIODE	1	
D2015-18	MA153	DIODE	4	
D2019	MA151K	DIODE	1	
D2201-08	MA153	DIODE	8	
D2209	MA151WK	DIODE	1	
D2211-20	MA153	DIODE	10	
IC2001	MN67512VAVF	IC	1	

Ref.No.	Part No.	Part Name & Description	Pcs	Remarks
IC2002	MN67512VMCZ	IC	1	
IC2003	MC14556BF	IC	1	
IC2004	MC14539BF	IC	1	
IC2005	UPC78N12H	IC	1	
IC2006	MC14049UBF	IC	1	
IC2011	NJM2904M	IC	1	
IC2012,13	NJM4558M	IC	2	
IC2014	NJM2904M	IC	1	
IC2015	NJM2903M	IC	1	
IC2016	MC14013BF	IC	1	
IC2018	MN4030BS	IC	1	
IC2021	MC14027BF	IC	1	
IC2022,23	NJM2904M	IC	2	
IC2024	MC74HC14AF	IC	1	
IC2025	MC74HC157AF	IC	1	
IC2026	MC74HC74AF	IC	1	
IC2027	MC74HC175F	IC	1	
IC2028	MC74HC00AF	IC	1	
IC2029-31	MC74HC161AF	IC	3	
IC2033	NJM2904M	IC	1	
IC2035	NJM2904M	IC	1	
IC2036	MC74HC14AF	IC	1	
IC2037-39	MC14050BF	IC	3	
IC2040	MC74HC157AF	IC	1	
IC2041	NJM4558M	IC	1	
IC2042	TL082CPS	IC	1	
IC2043	BA6110	IC	1	
IC2044	NJM4558M	IC	1	
IC2045	MC14538BF	IC	1	
IC2046	MC74HC14AF	IC	1	
IC2047	AN78L09	IC	1	
IC2050	NJM2903M	IC	1	
IC2051	NJM2904M	IC	1	
IC2053	MC14526BF	IC	1	
IC2054	MSM5210RS	IC	1	
IC2055	NJM2904M	IC	1	
IC2056,57	MC14053BF	IC	2	
IC2058	AN79L09	IC	1	
IC2060	NJM2903M	IC	1	
IC2061	NJM2904M	IC	1	
IC2062	MC74HC08AF	IC	1	
IC2063	MC14053BF	IC	1	
IC2064	MC74HC86F	IC	1	
IC2100	MC14053BF	IC	1	
IC2201	MN188166VHI5	IC	1	
IC2202	VSI1083L	IC	1	
IC2203	DAC1220LCN	IC	1	
IC2204	TL7705CPSB	IC	1	
IC2205	MC14520BF	IC	1	
IC2206	NJM2904M	IC	1	
IC2207	NJM2902M	IC	1	
IC2208	MC14053BF	IC	1	
IC2209	NJM2904M	IC	1	
IC2210	TL084CNS	IC	1	
IC2211,12	MC14066BF	IC	2	
IC2213	MC14013BF	IC	1	
IC2214	MC14053BF	IC	1	
IC2216	MC14081BF	IC	1	
IC2217	NJM2902M	IC	1	
IC2218,19	MSM5210RS	IC	2	
IC2220	MC74HC08AF	IC	1	
IC2221	MC14053BF	IC	1	
IC2222	NJM2903M	IC	1	
IC2231	MC74HC237F	IC	1	
IC2232,33	TL084CNS	IC	2	
IC2235	BA6110	IC	1	
IC2236-39	UPC4741G2	IC	4	
IC2240	TL084CNS	IC	1	
IC2241	NJM2901M	IC	1	
IC2242	MC14053BF	IC	1	
IC2243	MC14050BF	IC	1	
IC2245	MC14053BF	IC	1	
ICS2202	VJS2726	CONNECTOR (FEMALE)	1	

Ref.No.	Part No.	Part Name & Description	Pcs	Remarks
JE	VEUF3A030AA		1	
L2002	VLQ0128	COIL	1	
L2004	VLQ0128	COIL	1	
L2206	VLQ0128	COIL	1	
P2209,10	VJP3151	CONNECTOR (MALE)	2	
Q2003,04	2SD601-R	TRANSISTOR	2	
Q2006	2SD601-R	TRANSISTOR	1	
Q2007	2SJ43	TRANSISTOR	1	
Q2008	UN2213	TRANSISTOR	1	
Q2010	UN2213	TRANSISTOR	1	
Q2011	2SD601-R	TRANSISTOR	1	
Q2012,13	2SB709-R	TRANSISTOR	2	
Q2014,15	2SD601-R	TRANSISTOR	2	
Q2016	2SK374-R	TRANSISTOR	1	
Q2017	UN2213	TRANSISTOR	1	
Q2018	UN2113	TRANSISTOR	1	
Q2019	2SK374-R	TRANSISTOR	1	
Q2020	UN2213	TRANSISTOR	1	
Q2021	UN2113	TRANSISTOR	1	
Q2022	2SB709-R	TRANSISTOR	1	
Q2023	UN2215	TRANSISTOR	1	
Q2026	UN2213	TRANSISTOR	1	
Q2027	UN2113	TRANSISTOR	1	
Q2028	UN2213	TRANSISTOR	1	
Q2029	UN2113	TRANSISTOR	1	
Q2201	2SD601-R	TRANSISTOR	1	
Q2202	UN2213	TRANSISTOR	1	
		RESISTORS		
R2001	ERJ6GEYJ824	M.RESISTOR CH1/10W 820K	1	
R2012	ERJ6GEYJ102	M.RESISTOR CH1/10W 1K	1	
R2013-15	ERJ6GEYJ103	M.RESISTOR CH1/10W 10K	3	
R2023	ERJ6GEYG153	M.RESISTOR CH1/10W 15K	1	
R2024,25	ERJ6GEYJ103	M.RESISTOR CH1/10W 10K	2	
R2026	ERJ6GEYJ474	M.RESISTOR CH1/10W 470K	1	
R2027	ERJ6GEYG153	M.RESISTOR CH1/10W 15K	1	
R2028,29	ERJ6GEYJ103	M.RESISTOR CH1/10W 10K	2	
R2030	ERJ6GEYJ474	M.RESISTOR CH1/10W 470K	1	
R2031-34	ERJ6GEYJ473	M.RESISTOR CH1/10W 47K	4	
R2035-37	ERJ6GEYJ272	M.RESISTOR CH1/10W 2.7K	3	
R2038	ERJ6GEYJ224	M.RESISTOR CH1/10W 220K	1	
R2039	ERJ6GEYJ272	M.RESISTOR CH1/10W 2.7K	1	
R2040	ERJ6GEYJ224	M.RESISTOR CH1/10W 220K	1	
R2041	ERJ6GEYF333	M.RESISTOR CH1/10W 33K	1	
R2043	ERJ6GEYJ104	M.RESISTOR CH1/10W 100K	1	
R2044	ERJ6GEYJ102	M.RESISTOR CH1/10W 1K	1	
R2045,46	ERJ6GEYJ103	M.RESISTOR CH1/10W 10K	2	
R2047	ERJ6GEYJ563	M.RESISTOR CH1/10W 56K	1	
R2050	ERJ6GEYJ563	M.RESISTOR CH1/10W 56K	1	
R2051	ERJ6GEYJ750	M.RESISTOR CH1/10W 75	1	
R2054-56	ERJ6GEYJ563	M.RESISTOR CH1/10W 56K	3	
R2057	ERJ6GEYJ332	M.RESISTOR CH1/10W 3.3K	1	
R2058	ERJ6GEYJ223	M.RESISTOR CH1/10W 22K	1	
R2059	ERJ6GEYJ183	M.RESISTOR CH1/10W 18K	1	
R2060	ERJ6GEYJ102	M.RESISTOR CH1/10W 1K	1	
R2061	ERJ6GEYJ562	M.RESISTOR CH1/10W 5.6K	1	
R2062	ERJ6GEYJ821	M.RESISTOR CH1/10W 820	1	
R2064,65	ERJ6GEYJ562	M.RESISTOR CH1/10W 5.6K	2	
R2066	ERJ6GEYJ563	M.RESISTOR CH1/10W 56K	1	
R2067	ERJ6GEYJ562	M.RESISTOR CH1/10W 5.6K	1	
R2068	ERJ6GEYJ563	M.RESISTOR CH1/10W 56K	1	
R2069	ERJ6GEYJ273	M.RESISTOR CH1/10W 27K	1	
R2070	ERJ6GEYJ103	M.RESISTOR CH1/10W 10K	1	

Ref.No.	Part No.	Part Name & Description	Pcs	Remarks
R2071	ERJ6GEYJ684	M.RESISTOR CH1/10W 680K	1	
R2072,73	ERJ6GEYJ103	M.RESISTOR CH1/10W 10K	2	
R2074	ERJ6GEYJ184	M.RESISTOR CH1/10W 180K	1	
R2075	ERJ6GEYJ474	M.RESISTOR CH1/10W 470K	1	
R2076	VRE0034E104	M.RESISTOR CH 1/10W 100K	1	
R2077	VRE0034E123	M.RESISTOR CH 1/10W 12K	1	
R2078	VRE0034E152	M.RESISTOR CH 1/10W 1.5K	1	
R2079	VRE0034E123	M.RESISTOR CH 1/10W 12K	1	
R2080	ERJ6GEYJ273	M.RESISTOR CH1/10W 27K	1	
R2081,82	VRE0034E103	M.RESISTOR CH 1/10W 10K	2	
R2083	VRE0034E273	M.RESISTOR CH 1/10W 27K	1	
R2084	ERJ6GEYJ103	M.RESISTOR CH1/10W 10K	1	
R2085,86	ERJ6GEYJ473	M.RESISTOR CH1/10W 47K	2	
R2087	ERJ6GEYJ273	M.RESISTOR CH1/10W 27K	1	
R2088,89	ERJ6GEYG151	M.RESISTOR CH1/10W 150	2	
R2090-93	ERJ6GEYJ103	M.RESISTOR CH1/10W 10K	4	
R2095	ERJ6GEYJ331	M.RESISTOR CH1/10W 330	1	
R2096	ERJ6GEYF333	M.RESISTOR CH1/10W 33K	1	
R2100	ERJ6GEYJ334	M.RESISTOR CH1/10W 330K	1	
R2101	ERJ6GEYJ100	M.RESISTOR CH1/10W 10	1	
R2102	ERJ6GEYJ103	M.RESISTOR CH1/10W 10K	1	
R2104	ERJ6GEYF472	M.RESISTOR CH1/10W 4.7K	1	
R2110	ERJ6GEYJ272	M.RESISTOR CH1/10W 2.7K	1	
R2111	ERJ6GEYJ274	M.RESISTOR CH1/10W 270K	1	
R2112	ERJ6GEYJ103	M.RESISTOR CH1/10W 10K	1	
R2113	ERJ6GEYJ104	M.RESISTOR CH1/10W 100K	1	
R2114	ERJ6GEYJ103	M.RESISTOR CH1/10W 10K	1	
R2115	ERJ6GEYJ394	M.RESISTOR CH1/10W 390K	1	
R2116	ERJ6GEYJ103	M.RESISTOR CH1/10W 10K	1	
R2117	ERJ6GEYJ155	M.RESISTOR CH1/10W 1.5M	1	
R2118	ERJ6GEYJ103	M.RESISTOR CH1/10W 10K	1	
R2119	ERJ6GEYJ272	M.RESISTOR CH1/10W 2.7K	1	
R2120	ERJ6GEYJ393	M.RESISTOR CH1/10W 39K	1	
R2121	ERJ6GEYJ273	M.RESISTOR CH1/10W 27K	1	
R2122	ERJ6GEYJ334	M.RESISTOR CH1/10W 330K	1	
R2125-28	ERJ6GEYJ102	M.RESISTOR CH1/10W 1K	4	
R2129-31	ERJ6GEYJ221	M.RESISTOR CH1/10W 220	3	
R2132	ERJ6GEYJ105	M.RESISTOR CH1/10W 1M	1	
R2133	ERJ6GEYJ103	M.RESISTOR CH1/10W 10K	1	
R2134	ERJ6GEYJ105	M.RESISTOR CH1/10W 1M	1	
R2135	ERJ6GEYJ103	M.RESISTOR CH1/10W 10K	1	
R2136	ERJ6GEYJ104	M.RESISTOR CH1/10W 100K	1	
R2137	ERJ6GEYJ563	M.RESISTOR CH1/10W 56K	1	
R2138,39	ERJ6GEYJ103	M.RESISTOR CH1/10W 10K	2	
R2141-63	ERJ6GEYJ103	M.RESISTOR CH1/10W 10K	23	
R2165-72	ERJ6GEYJ103	M.RESISTOR CH1/10W 10K	8	
R2176	ERJ6GEYJ103	M.RESISTOR CH1/10W 10K	1	
R2178,79	ERJ6GEYJ103	M.RESISTOR CH1/10W 10K	2	
R2180	ERJ6GEYJ105	M.RESISTOR CH1/10W 1M	1	
R2181-83	ERJ6GEYJ562	M.RESISTOR CH1/10W 5.6K	3	
R2184,85	ERJ6GEYJ103	M.RESISTOR CH1/10W 10K	2	
R2186	ERJ6GEYJ562	M.RESISTOR CH1/10W 5.6K	1	
R2187,88	ERJ6GEYJ103	M.RESISTOR CH1/10W 10K	2	
R2189	ERJ6GEYF333	M.RESISTOR CH1/10W 33K	1	
R2190	ERJ6GEYJ123	M.RESISTOR CH1/10W 12K	1	
R2191	ERJ6GEYJ562	M.RESISTOR CH1/10W 5.6K	1	
R2192-95	ERJ6GEYJ103	M.RESISTOR CH1/10W 10K	4	
R2196	ERJ6GEYJ101	M.RESISTOR CH1/10W 100	1	
R2197	ERDS2TJ103	C.RESISTOR 1/4W 10K	1	
R2201	ERJ6GEYJ473	M.RESISTOR CH1/10W 47K	1	
R2202	ERJ6GEYJ103	M.RESISTOR CH1/10W 10K	1	
R2203-05	ERJ6GEYJ561	M.RESISTOR CH1/10W 560	3	
R2206-08	ERJ6GEYJ473	M.RESISTOR CH1/10W 47K	3	
R2209,10	VRE0034E103	M.RESISTOR CH 1/10W 10K	2	
R2211,12	ERJ6GEYJ103	M.RESISTOR CH1/10W 10K	2	
R2213	ERJ6GEYJ272	M.RESISTOR CH1/10W 2.7K	1	
R2214	ERJ6GEYJ392	M.RESISTOR CH1/10W 3.9K	1	
R2215	ERJ6GEYJ272	M.RESISTOR CH1/10W 2.7K	1	
R2216	ERJ6GEYJ100	M.RESISTOR CH1/10W 10	1	
R2217,18	ERJ6GEYJ103	M.RESISTOR CH1/10W 10K	2	
R2219	ERJ6GEYJ105	M.RESISTOR CH1/10W 1M	1	
R2236	ERJ6GEYJ103	M.RESISTOR CH1/10W 10K	1	
R2237	VRE0034E102	M.RESISTOR CH 1/10W 1K	1	
R2238	VRE0034E302	M.RESISTOR CH 1/10W 3K	1	
R2239-41	VRE0034E102	M.RESISTOR CH 1/10W 1K	3	

Ref.No.	Part No.	Part Name & Description	Pcs	Remarks
R2247	ERJ6GEYJ100	M.RESISTOR CH1/10W 10	1	
R2251	ERJ6GEYJ103	M.RESISTOR CH1/10W 10K	1	
R2252	ERJ6GEYJ563	M.RESISTOR CH1/10W 56K	1	
R2260	ERJ6GEYJ561	M.RESISTOR CH1/10W 560	1	
R2261,62	VRE0034E683	M.RESISTOR CH 1/10W 68K	2	
R2263,64	VRE0034E103	M.RESISTOR CH 1/10W 10K	2	
R2265,66	ERJ6GEYJ103	M.RESISTOR CH1/10W 10K	2	
R2267	ERJ6GEYJ154	M.RESISTOR CH1/10W 150K	1	
R2268	ERJ6GEYJ393	M.RESISTOR CH1/10W 39K	1	
R2269	ERJ6GEYF333	M.RESISTOR CH1/10W 33K	1	
R2270	ERJ6GEYF124	M.RESISTOR CH1/10W 120K	1	
R2271	ERJ6GEYJ104	M.RESISTOR CH1/10W 100K	1	
R2272,73	VRE0034E103	M.RESISTOR CH 1/10W 10K	2	
R2278	ERJ6GEYJ103	M.RESISTOR CH1/10W 10K	1	
R2279	ERJ6GEYJ223	M.RESISTOR CH1/10W 22K	1	
R2280	ERJ6GEYJ273	M.RESISTOR CH1/10W 27K	1	
R2281	ERJ6GEYJ223	M.RESISTOR CH1/10W 22K	1	
R2282	ERJ6GEYJ224	M.RESISTOR CH1/10W 220K	1	
R2283	ERJ6GEYJ394	M.RESISTOR CH1/10W 390K	1	
R2284,85	ERJ6GEYJ473	M.RESISTOR CH1/10W 47K	2	
R2286	ERJ6GEYJ152	M.RESISTOR CH1/10W 1.5K	1	
R2287	ERJ6GEYF333	M.RESISTOR CH1/10W 33K	1	
R2288	ERJ6GEYJ223	M.RESISTOR CH1/10W 22K	1	
R2289	ERJ6GEYJ272	M.RESISTOR CH1/10W 2.7K	1	
R2290	ERJ6GEYF333	M.RESISTOR CH1/10W 33K	1	
R2291	ERJ6GEYJ184	M.RESISTOR CH1/10W 180K	1	
R2292	ERJ6GEYJ103	M.RESISTOR CH1/10W 10K	1	
R2293	ERJ6GEYJ223	M.RESISTOR CH1/10W 22K	1	
R2294	ERJ6GEYJ273	M.RESISTOR CH1/10W 27K	1	
R2295	ERJ6GEYJ223	M.RESISTOR CH1/10W 22K	1	
R2296	ERJ6GEYJ224	M.RESISTOR CH1/10W 220K	1	
R2297	ERJ6GEYJ394	M.RESISTOR CH1/10W 390K	1	
R2298,99	ERJ6GEYJ473	M.RESISTOR CH1/10W 47K	2	
R2300	ERJ6GEYJ152	M.RESISTOR CH1/10W 1.5K	1	
R2301	ERJ6GEYF333	M.RESISTOR CH1/10W 33K	1	
R2302	ERJ6GEYJ223	M.RESISTOR CH1/10W 22K	1	
R2303	ERJ6GEYJ272	M.RESISTOR CH1/10W 2.7K	1	
R2304	ERJ6GEYF333	M.RESISTOR CH1/10W 33K	1	
R2305	ERJ6GEYJ184	M.RESISTOR CH1/10W 180K	1	
R2306	ERJ6GEYJ103	M.RESISTOR CH1/10W 10K	1	
R2307	ERJ6GEYJ223	M.RESISTOR CH1/10W 22K	1	
R2308	ERJ6GEYJ273	M.RESISTOR CH1/10W 27K	1	
R2309	ERJ6GEYJ223	M.RESISTOR CH1/10W 22K	1	
R2310	ERJ6GEYJ224	M.RESISTOR CH1/10W 220K	1	
R2311	ERJ6GEYJ394	M.RESISTOR CH1/10W 390K	1	
R2312,13	ERJ6GEYJ473	M.RESISTOR CH1/10W 47K	2	
R2314	ERJ6GEYJ152	M.RESISTOR CH1/10W 1.5K	1	
R2315	ERJ6GEYF333	M.RESISTOR CH1/10W 33K	1	
R2316	ERJ6GEYJ223	M.RESISTOR CH1/10W 22K	1	
R2317	ERJ6GEYJ272	M.RESISTOR CH1/10W 2.7K	1	
R2318	ERJ6GEYF333	M.RESISTOR CH1/10W 33K	1	
R2319	ERJ6GEYJ184	M.RESISTOR CH1/10W 180K	1	
R2320	ERJ6GEYJ103	M.RESISTOR CH1/10W 10K	1	
R2321	ERJ6GEYJ273	M.RESISTOR CH1/10W 27K	1	
R2322,23	ERJ6GEYJ223	M.RESISTOR CH1/10W 22K	2	
R2324	ERJ6GEYJ224	M.RESISTOR CH1/10W 220K	1	
R2325	ERJ6GEYJ394	M.RESISTOR CH1/10W 390K	1	
R2326,27	ERJ6GEYJ473	M.RESISTOR CH1/10W 47K	2	
R2328	ERJ6GEYJ152	M.RESISTOR CH1/10W 1.5K	1	
R2329	ERJ6GEYF333	M.RESISTOR CH1/10W 33K	1	
R2330	ERJ6GEYJ223	M.RESISTOR CH1/10W 22K	1	
R2331	ERJ6GEYJ272	M.RESISTOR CH1/10W 2.7K	1	
R2332	ERJ6GEYF333	M.RESISTOR CH1/10W 33K	1	
R2333	ERJ6GEYJ184	M.RESISTOR CH1/10W 180K	1	
R2335,36	ERJ6GEYJ473	M.RESISTOR CH1/10W 47K	2	
R2337	ERJ6GEYJ103	M.RESISTOR CH1/10W 10K	1	
R2338	ERJ6GEYJ563	M.RESISTOR CH1/10W 56K	1	
R2339	ERJ6GEYJ561	M.RESISTOR CH1/10W 560	1	
R2340-42	ERJ6GEYJ100	M.RESISTOR CH1/10W 10	3	
R2343	ERJ6GEYJ103	M.RESISTOR CH1/10W 10K	1	
R2344-46	ERJ6GEYJ100	M.RESISTOR CH1/10W 10	3	
R2361	ERJ6GEYJ223	M.RESISTOR CH1/10W 22K	1	

S6

S6 TIME CODE VEP86091G
S6 SUB VEP86133B

Ref.No.	Part No.	Part Name & Description	Pcs	Remarks
SW2001	VJP2631	CONNECTOR (MALE)	1	
SW2002-04	VSR0032	SWITCH	3	
SW2001S	VJS1990	CONNECTOR (FEMALE)	1	
TP2001,02	VJR0646	TEST POINT	2	
TP2012	VJR0646	TEST POINT	1	
TP2014	VJR0646	TEST POINT	1	
TP2017	VJR0646	TEST POINT	1	
TP2020	VJR0646	TEST POINT	1	
TP2037	VJR0646	TEST POINT	1	
TP2039-41	VJR0646	TEST POINT	3	
TP2044	VJR0646	TEST POINT	1	
TP2049	VJR0646	TEST POINT	1	
TP2201-26	VJR0646	TEST POINT	26	
TPG2001,02	VJR0646	TEST POINT	2	
TPG2004,05	VJR0646	TEST POINT	2	
VR2001,02	VRV0109B202	V.RESISTOR 2K	2	
VR2006	VRV0109B504	V.RESISTOR 500K	1	
VR2007	VRV0111B204	V.RESISTOR 200K	1	
VR2008	VRV0109B102	V.RESISTOR 1K	1	
VR2009	VRV0109B203	V.RESISTOR 20K	1	
VR2010	VRV0109B502	V.RESISTOR 5K	1	
VR2203	VRV0109B504	V.RESISTOR 500K	1	
X2001	VSX0150	CRYSTAL OSCILLATOR	1	
		MISCELLANEOUS		
	VGQ0291	P.C.BOARD NAME PLATE	1	
	VJS2509	CONNECTOR (FEMALE)	4	
	VML2143	CARD PULLER	1	
	VML2144	CARD PULLER	1	
	VXA4420	P.C.BOARD SHIELD PLATE	1	
	XNG26E	NUT	4	
	XTV3+6FFR	SCREW	5	
	XYN26+C12	SCREW	4	
	VJP2509	CONNECTOR (MALE)	4	
	VEP86091G	P.C.BOARD W/COMPONENT		
		S6 TIME CODE		
	VEP86133B	P.C.BOARD W/COMPONENT		
		S6 SUB		
B1,B2	VSB0017	BATTERY	2	
		CAPACITORS		
C1-C9	ECUM1H104ZFN	C.CAPACITOR CH 50V 0.1U	9	
C10-22	ECUM1H104ZFN	C.CAPACITOR CH 50V 0.1U	13	
C23,24	ECUM1H103ZFN	C.CAPACITOR CH 50V 0.01U	2	
C25	ECUM1H104ZFN	C.CAPACITOR CH 50V 0.1U	1	
C26-40	ECUM1H103ZFN	C.CAPACITOR CH 50V 0.01U	15	
C41	ECUM1H104ZFN	C.CAPACITOR CH 50V 0.1U	1	
C42-53	ECUM1H103ZFN	C.CAPACITOR CH 50V 0.01U	12	
C61-65	ECUM1H103ZFN	C.CAPACITOR CH 50V 0.01U	5	
C66	ECUM1H104ZFN	C.CAPACITOR CH 50V 0.1U	1	
C71-74	ECUM1H103ZFN	C.CAPACITOR CH 50V 0.01U	4	
C76	ECUM1H224ZFM	C.CAPACITOR CH 50V 0.22U	1	

Ref.No.	Part No.	Part Name & Description	Pcs	Remarks
C81,82	ECUM1H330JCN	C.CAPACITOR CH 50V 33P	2	
C83	ECUM1H390JCN	C.CAPACITOR CH 50V 39P	1	
C84	ECUM1H020DCN	C.CAPACITOR CH 50V 2P	1	
C85	ECUM1H330JCN	C.CAPACITOR CH 50V 33P	1	
C86-88	ECUM1H102KBN	C.CAPACITOR CH 50V 1000P	3	
C89	ECA1CXS470	E.CAPACITOR 16V 47U	1	
C90	ECA1HXS010	E.CAPACITOR 50V 1U	1	
C91,92	ECUM1H470JCN	C.CAPACITOR CH 50V 47P	2	
C93,94	ECUM1H150JCN	C.CAPACITOR CH 50V 15P	2	
C95,96	ECUM1H180JCN	C.CAPACITOR CH 50V 18P	2	
C97	ECUM1H470JCN	C.CAPACITOR CH 50V 47P	1	
C99	ECA1VXNV4R7	E.CAPACITOR 35V 4.7U	1	
C100	ECA1VXNV4R7	E.CAPACITOR 35V 4.7U	1	
C101	ECA1CXS100	E.CAPACITOR 16V 10U	1	
C102	ECUM1H120JCN	C.CAPACITOR CH 50V 12P	1	
C103	ECUM1H121JCN	C.CAPACITOR CH 50V 120P	1	
C104	ECUM1H122KBN	C.CAPACITOR CH 50V 1200P	1	
C105-07	ECA1VXNV4R7	E.CAPACITOR 35V 4.7U	3	
C108,09	ECUM1H220JCN	C.CAPACITOR CH 50V 22P	2	
C110	ECUM1H103KBN	C.CAPACITOR CH 50V 0.01U	1	
C111,12	ECUM1H221JCN	C.CAPACITOR CH 50V 220P	2	
C113-16	ECA1CXS100	E.CAPACITOR 16V 10U	4	
C117	ECA1AXS680	E.CAPACITOR 10V 68U	1	
C118	ECUM1H390JCN	C.CAPACITOR CH 50V 39P	1	
C119	ECUM1H560JCN	C.CAPACITOR CH 50V 56P	1	
C120	ECUM1H151JCN	C.CAPACITOR CH 50V 150P	1	
C121	ECUM1H101JCN	C.CAPACITOR CH 50V 100P	1	
C6201,02	ECUM1H103ZFN	C.CAPACITOR CH 50V 0.01U	2	
C6203	ECEV1CV470Q	E.CAPACITOR 16V 47U	1	
C6204-06	ECEV1EV100Q	E.CAPACITOR 25V 10U	3	
C6207	ECUM1H472KBN	C.CAPACITOR CH 50V 4700P	1	
C6208	ECEV1CV470Q	E.CAPACITOR 16V 47U	1	
C6209	ECUM1H472KBN	C.CAPACITOR CH 50V 4700P	1	
C6210	ECEV1HN4R7Q	E.CAPACITOR 50V 4.7U	1	
C6211,12	ECUM1H103ZFN	C.CAPACITOR CH 50V 0.01U	2	
C6214	ECUM1H220JCN	C.CAPACITOR CH 50V 22P	1	
C6215-19	ECUM1H103ZFN	C.CAPACITOR CH 50V 0.01U	5	
C6220	ECUM1H102KBN	C.CAPACITOR CH 50V 1000P	1	
C6221	ECEV1CN100Q	E.CAPACITOR 16V 10U	1	
D1,D2	MA151K	DIODE	2	
D3,D4	HZ3ALL	DIODE	2	
D5,D6	MA153	DIODE	2	
D7	MA151K	DIODE	1	
FL6201	VLF0928	FILTER	1	
IC1	UPD78C10GF	IC	1	
IC2	UPD7503GB26	IC	1	
IC3	VSI1095J	IC	1	
IC4	MN51040VPI	IC	1	
IC5	MN1287BF	IC	1	
IC6	MB8421-90LPF	IC	1	
IC7	MB89363BPF	IC	1	
IC8	HD64180ZRP8	IC	1	
IC9	VSI1096G	IC	1	
IC10	MB8464A80LFF	IC	1	
IC11	MB8421-90LPF	IC	1	
IC12,13	TMPZ84C43AF6	IC	2	
IC14	UPD7210C	IC	1	
IC15	MC74HC573AF	IC	1	
IC16,17	MC74HC138AF	IC	2	
IC18	MC74HC574AF	IC	1	
IC19-21	MC74HC138AF	IC	3	
IC22	MM74HC221AM	IC	1	
IC23	MC74HC4053F	IC	1	
IC24	MC74HC541AF	IC	1	
IC25	MC74HC4040F	IC	1	
IC26	MC74HC4053F	IC	1	

Ref.No.	Part No.	Part Name & Description	Pcs	Remarks
IC27	MC74HC153F	IC	1	
IC28-30	MC34051M	IC	3	
IC31	MC1488M	IC	1	
IC32	MC1489M	IC	1	
IC33	SN75160BN	IC	1	
IC34	SN75161BN	IC	1	
IC35,36	MC74HC4066F	IC	2	
IC37	MC74HC74AF	IC	1	
IC38	MC74HC32AF	IC	1	
IC39	MC74HC4050F	IC	1	
IC40	MC74HC32AF	IC	1	
IC41	MC74HCU04F	IC	1	
IC42,43	MC74HC08AF	IC	2	
IC44-46	MC74HC4050F	IC	3	
IC47	MC74HC4053F	IC	1	
IC48	MC14069UBF	IC	1	
IC49	MC14046BF	IC	1	
IC50	MC74HC175F	IC	1	
IC51	MC74HC4040F	IC	1	
IC52	MC74HC164F	IC	1	
IC53	MC74HC00AF	IC	1	
IC61	UPC319G2	IC	1	
IC62,63	NJM4556MB	IC	2	
IC64	UPC4741G	IC	1	
IC65	NJM2904M	IC	1	
IC66	UPC317H	IC	1	
IC6201	AN78L05	IC	1	
IC6202	NJM4558M	IC	1	
IC6203	MN8305S	IC	1	
IC6204	MC74HC4053F	IC	1	
IC6205	NJM4558M	IC	1	
IC6206	MC74HC04AF	IC	1	
IC6207	MB81C4256A8P	IC	1	
IC6208	MB621926	IC	1	
ICS3	VJS2336A028	CONNECTOR (FEMALE)	1	
ICS8	VJS1830	CONNECTOR (FEMALE)	1	
ICS9	VJS2336A028	CONNECTOR (FEMALE)	1	
L1-L5	VLF0931	FILTER	5	
P211,12	VJP3151	CONNECTOR (MALE)	2	
P6201	VJP1250T	CONNECTOR (MALE)	1	
Q1	2SB710	TRANSISTOR	1	
Q2,Q3	2SD602	TRANSISTOR	2	
Q4	2SB710	TRANSISTOR	1	
Q5,Q6	UN2213	TRANSISTOR	2	
Q7	2SK198	TRANSISTOR	1	
Q8	2SB710	TRANSISTOR	1	
Q9	2SD602	TRANSISTOR	1	
Q10	2SD602	TRANSISTOR	1	
Q11	2SB710	TRANSISTOR	1	
Q12-25	UN2213	TRANSISTOR	14	
		RESISTORS		
R1,R2	ERJ6GEYJ103	M.RESISTOR CH1/10W 10K	2	
R3	VRE0034E164	M.RESISTOR CH 1/10W 160K	1	
R4	ERJ6GEYJ334	M.RESISTOR CH1/10W 330K	1	
R5-R7	ERJ6GEYJ103	M.RESISTOR CH1/10W 10K	3	
R8	ERJ6GEYJ273	M.RESISTOR CH1/10W 27K	1	
R9	ERJ6GEYJ823	M.RESISTOR CH1/10W 82K	1	
R10-12	ERJ6GEYJ154	M.RESISTOR CH1/10W 150K	3	
R13	ERJ6GEYJ471	M.RESISTOR CH1/10W 470	1	
R14	ERJ6GEYJ823	M.RESISTOR CH1/10W 82K	1	
R15	ERJ6GEYJ223	M.RESISTOR CH1/10W 22K	1	
R16	ERJ6GEYG153	M.RESISTOR CH1/10W 15K	1	
R17	ERJ6GEYJ681	M.RESISTOR CH1/10W 680	1	

Ref.No.	Part No.	Part Name & Description	Pcs	Remarks
R18	ERJ6GEYJ563	M.RESISTOR CH1/10W 56K	1	
R19	ERJ6GEYJ273	M.RESISTOR CH1/10W 27K	1	
R20	ERJ6GEYJ123	M.RESISTOR CH1/10W 12K	1	
R21	ERJ6GEYJ104	M.RESISTOR CH1/10W 100K	1	
R22	ERJ6GEYJ223	M.RESISTOR CH1/10W 22K	1	
R23	ERJ6GEYJ104	M.RESISTOR CH1/10W 100K	1	
R24	ERJ6GEYJ103	M.RESISTOR CH1/10W 10K	1	
R25	ERJ6GEYJ104	M.RESISTOR CH1/10W 100K	1	
R26,27	ERJ6GEYJ562	M.RESISTOR CH1/10W 5.6K	2	
R28	ERJ6GEYJ473	M.RESISTOR CH1/10W 47K	1	
R29,30	ERJ6GEYJ104	M.RESISTOR CH1/10W 100K	2	
R31	ERJ6GEYJ473	M.RESISTOR CH1/10W 47K	1	
R32	ERJ6GEYJ105	M.RESISTOR CH1/10W 1M	1	
R33-37	ERJ6GEYJ104	M.RESISTOR CH1/10W 100K	5	
R38	ERJ6GEYJ682	M.RESISTOR CH1/10W 6.8K	1	
R39,40	ERJ6GEYJ104	M.RESISTOR CH1/10W 100K	2	
R42	ERJ6GEYJ103	M.RESISTOR CH1/10W 10K	1	
R43	ERJ6GEYJ473	M.RESISTOR CH1/10W 47K	1	
R44	ERJ6GEYJ104	M.RESISTOR CH1/10W 100K	1	
R45,46	ERJ6GEYJ103	M.RESISTOR CH1/10W 10K	2	
R47	ERJ6GEYJ824	M.RESISTOR CH1/10W 820K	1	
R48-50	ERJ6GEYJ102	M.RESISTOR CH1/10W 1K	3	
R51	ERJ6GEYJ104	M.RESISTOR CH1/10W 100K	1	
R52,53	ERJ6GEYJ223	M.RESISTOR CH1/10W 22K	2	
R54	ERJ6GEYJ394	M.RESISTOR CH1/10W 390K	1	
R55,56	ERJ6GEYF333	M.RESISTOR CH1/10W 33K	2	
R57	ERJ6GEYJ103	M.RESISTOR CH1/10W 10K	1	
R58,59	ERJ6GEYJ105	M.RESISTOR CH1/10W 1M	2	
R60	ERJ6GEYJ223	M.RESISTOR CH1/10W 22K	1	
R61	ERJ6GEYJ103	M.RESISTOR CH1/10W 10K	1	
R62,63	ERJ6GEYJ222	M.RESISTOR CH1/10W 2.2K	2	
R64,65	ERJ6GEYJ4R7	M.RESISTOR CH1/10W 4.7	2	
R66	ERJ6GEYG680	M.RESISTOR CH1/10W 68	1	
R67	VRE0034E332	M.RESISTOR CH 1/10W 3.3K	1	
R68,69	VRE0034E822	M.RESISTOR CH 1/10W 8.2K	2	
R70	ERJ6GEYJ470	M.RESISTOR CH1/10W 47	1	
R71-73	VRE0034E332	M.RESISTOR CH 1/10W 3.3K	3	
R74	VRE0034E822	M.RESISTOR CH 1/10W 8.2K	1	
R75	ERJ6GEYJ470	M.RESISTOR CH1/10W 47	1	
R76	ERJ6GEYJ103	M.RESISTOR CH1/10W 10K	1	
R77	ERJ6GEYJ473	M.RESISTOR CH1/10W 47K	1	
R78	ERJ6GEYJ102	M.RESISTOR CH1/10W 1K	1	
R79	ERJ6GEYJ473	M.RESISTOR CH1/10W 47K	1	
R80	ERJ6GEYJ102	M.RESISTOR CH1/10W 1K	1	
R81-84	VRE0034E222	M.RESISTOR CH 1/10W 2.2K	4	
R85-88	ERJ6GEYJ103	M.RESISTOR CH1/10W 10K	4	
R89-98	ERJ6GEYJ104	M.RESISTOR CH1/10W 100K	10	
R99	ERJ6GEYJ103	M.RESISTOR CH1/10W 10K	1	
R100,01	ERJ6GEYJ562	M.RESISTOR CH1/10W 5.6K	2	
R102	ERJ6GEYJ474	M.RESISTOR CH1/10W 470K	1	
R103,04	ERJ6GEYJ562	M.RESISTOR CH1/10W 5.6K	2	
R105	ERJ6GEYJ105	M.RESISTOR CH1/10W 1M	1	
R106	ERJ6GEYJ562	M.RESISTOR CH1/10W 5.6K	1	
R107-10	ERJ6GEYJ103	M.RESISTOR CH1/10W 10K	4	
R111-22	ERJ6GEYJ152	M.RESISTOR CH1/10W 1.5K	12	
R123	ERJ6GEYJ103	M.RESISTOR CH1/10W 10K	1	
R124	ERJ6GEYJ241	M.RESISTOR CH1/10W 240	1	
R125	ERC14GJ226D	S.RESISTOR 1/4W 22M	1	
R126	ERJ6GEYJ123	M.RESISTOR CH1/10W 12K	1	
R127	ERJ6GEYJ223	M.RESISTOR CH1/10W 22K	1	
R128	ERJ6GEYJ684	M.RESISTOR CH1/10W 680K	1	
R129	ERJ6GEYJ564	M.RESISTOR CH1/10W 560K	1	
R130-33	ERJ6GEYJ104	M.RESISTOR CH1/10W 100K	4	
R134	ERJ6GEYJ473	M.RESISTOR CH1/10W 47K	1	
R6201	ERJ6GEYF472	M.RESISTOR CH1/10W 4.7K	1	
R6202	ERJ6GEYJ562	M.RESISTOR CH1/10W 5.6K	1	
R6203,04	ERJ6GEYF472	M.RESISTOR CH1/10W 4.7K	2	
R6205	ERJ6GEYJ123	M.RESISTOR CH1/10W 12K	1	
R6206	ERJ6GEYJ393	M.RESISTOR CH1/10W 39K	1	
R6207	ERJ6GEYJ822	M.RESISTOR CH1/10W 8.2K	1	
R6208	ERJ6GEYJ152	M.RESISTOR CH1/10W 1.5K	1	
R6209-11	ERJ6GEYJ823	M.RESISTOR CH1/10W 82K	3	
R6212	ERJ6GEYJ183	M.RESISTOR CH1/10W 18K	1	
R6213	ERJ6GEYJ223	M.RESISTOR CH1/10W 22K	1	
R6214	ERJ6GEYJ824	M.RESISTOR CH1/10W 820K	1	

S7

S7 SYSTEM CONTROL VEP86092F

Ref.No.	Part No.	Part Name & Description	Pcs	Remarks
R6215-23	ERJ6GEYJ103	M.RESISTOR CH1/10W 10K	9	
R6226	ERJ6GEY0R00	M.RESISTOR CH 1/10W 0	1	
R6228-31	ERJ6GEY0R00	M.RESISTOR CH 1/10W 0	4	
RA1,A2	EXBLD8103G	COMBI.R-R 10K	2	
TP1	VJR0646	TEST POINT	1	
TP4-P6	VJR0646	TEST POINT	3	
TP6002,03	VJR0646	TEST POINT	2	
TP6201	VJR0646	TEST POINT	1	
TPGA1	VJR0646	TEST POINT	1	
TPGD1,D2	VJR0646	TEST POINT	2	
VC1	ECRHA010A11	TRIMMER	1	
VR1	VRV0109B502	V.RESISTOR 5K	1	
VR2	VRV0109B102	V.RESISTOR 1K	1	
VR6201	VRV0109B103	V.RESISTOR 10K	1	
W1	ERJ6GEY0R00	M.RESISTOR CH 1/10W 0	1	
W3	ERJ6GEY0R00	M.RESISTOR CH 1/10W 0	1	
W5	ERJ6GEY0R00	M.RESISTOR CH 1/10W 0	1	
W7	ERJ6GEY0R00	M.RESISTOR CH 1/10W 0	1	
W10,11	ERJ6GEY0R00	M.RESISTOR CH 1/10W 0	2	
W13	ERJ6GEY0R00	M.RESISTOR CH 1/10W 0	1	
W15	ERJ6GEY0R00	M.RESISTOR CH 1/10W 0	1	
W19	ERJ6GEY0R00	M.RESISTOR CH 1/10W 0	1	
W23	ERJ6GEY0R00	M.RESISTOR CH 1/10W 0	1	
W2P	VJP1990	CONNECTOR (MALE)	1	
W2S	VJS1990	CONNECTOR (FEMALE)	1	
X1	VSX0178	CRYSTAL OSCILLATOR	1	
X2	VSX0254	CRYSTAL OSCILLATOR	1	
X3	VSX0119	CRYSTAL OSCILLATOR	1	
X4	VSX0097	CRYSTAL OSCILLATOR	1	
X5	VSX0150	CRYSTAL OSCILLATOR	1	
X6	VSX0541	CRYSTAL OSCILLATOR	1	
X7	VSX0098	CRYSTAL OSCILLATOR	1	
		MISCELLANEOUS		
	VGQ0291	P.C.BOARD NAME PLATE	1	
	VML2143	CARD PULLER	1	
	VML2144	CARD PULLER	1	
	VXA4420	P.C.BOARD SHIELD PLATE	1	
	XNG26E	NUT	4	
	XTV3+6FFR	SCREW	5	
	XYN26+C12	SCREW	4	
	VJR0421	POST	4	
	VEP86092F	P.C.BOARD W/COMPONENT		
		S7 SYSTEM CONTROL		

Ref.No.	Part No.	Part Name & Description	Pcs	Remarks
		CAPACITORS		
C1-C9	ECUM1H104ZFN	C.CAPACITOR CH 50V 0.1U	9	
C10-35	ECUM1H104ZFN	C.CAPACITOR CH 50V 0.1U	26	
C36-82	ECUM1H103ZFN	C.CAPACITOR CH 50V 0.01U	47	
C83	ECUM1H104ZFN	C.CAPACITOR CH 50V 0.1U	1	
C84-86	ECUM1H103ZFN	C.CAPACITOR CH 50V 0.01U	3	
C88	ECUM1H104ZFN	C.CAPACITOR CH 50V 0.1U	1	
C89	ECUM1H224ZFM	C.CAPACITOR CH 50V 0.22U	1	
C101,02	ECUM1H220JCN	C.CAPACITOR CH 50V 22P	2	
C103	ECUM1H104ZFN	C.CAPACITOR CH 50V 0.1U	1	
C104	ECA1HXS2R2	E.CAPACITOR 50V 2.2U	1	
C105	ECUM1H103KBN	C.CAPACITOR CH 50V 0.01U	1	
C106	ECUM1H101JCN	C.CAPACITOR CH 50V 100P	1	
C107-28	ECUM1H103KBN	C.CAPACITOR CH 50V 0.01U	22	
C129	ECA1AXS680	E.CAPACITOR 10V 68U	1	
C130-33	ECUM1H103KBN	C.CAPACITOR CH 50V 0.01U	4	
C134	ECA1HXS0R1	E.CAPACITOR 50V 0.1U	1	
C135	ECA1CXS100	E.CAPACITOR 16V 10U	1	
C136	ECA1AXS680	E.CAPACITOR 10V 68U	1	
C200	ECKF1H471KB	C.CAPACITOR 50V 470P	1	
C201	ECKF1H102KB	C.CAPACITOR 50V 1000P	1	
D1,D2	MA151K	DIODE	2	
IC1	HD64180ZRP8	IC	1	
IC2	VSI1093T	IC	1	
IC3	MB8464A80LFF	IC	1	
IC4	DS1225Y-200	IC	1	
IC5,C6	MB8421-90LPF	IC	2	
IC7,C8	MB89363BPF	IC	2	
IC9	UPD71054GB	IC	1	
IC10,11	UPD71054GB	IC	2	
IC12-23	MC74HC574AF	IC	12	
IC24	MC74HC245AF	IC	1	
IC25-27	MC74HC541AF	IC	3	
IC28	MC74HC138AF	IC	1	
IC29	MC74HC139AF	IC	1	
IC30-34	MC74HC138AF	IC	5	
IC35	MC74HC4040F	IC	1	
IC36	MC74HC164F	IC	1	
IC37	MC74HC175F	IC	1	
IC38	MC74HC161AF	IC	1	
IC39	MC74HC164F	IC	1	
IC40-43	MC74HC541AF	IC	4	
IC44	MC74HC164F	IC	1	
IC45	MC74HC175F	IC	1	
IC46	MC74HC161AF	IC	1	
IC47	MC74HC164F	IC	1	
IC48,49	MC74HC541AF	IC	2	
IC50	MC74HC244AF	IC	1	
IC51,52	MC74HC4040F	IC	2	
IC53	MC74HC165F	IC	1	
IC54	MC14094BF	IC	1	
IC55,56	MC34051M	IC	2	
IC57,58	MC74HC164F	IC	2	
IC59,60	MC74HC158F	IC	2	
IC61	MC74HC4050F	IC	1	
IC62,63	MC74HC32AF	IC	2	
IC64	MC74HC08AF	IC	1	
IC65,66	MC74HC74AF	IC	2	
IC67	MC74HC27F	IC	1	
IC68	MC74HC02AF	IC	1	
IC69	MC74HC74AF	IC	1	
IC70	MC14584BF	IC	1	
IC71	MC74HC74AF	IC	1	
IC72,73	MC74HC04AF	IC	2	
IC74	MC74HC02AF	IC	1	
IC75-82	MC74HC4050F	IC	8	
IC83	MC74HC573AF	IC	1	
IC84	NJM2901M	IC	1	

S8 AUDIO PROCESS VEP84111B
S8 SUB 1 VEP84158D

Ref.No.	Part No.	Part Name & Description	Pcs	Remarks
IC85	NJM2904M	IC	1	
IC86	NJM2902M	IC	1	
IC87	TL7705CPSB	IC	1	
IC88	UPC317H	IC	1	
IC89,90	SN74S1051NS	DIODE	2	
ICS1	VJS1830	CONNECTOR (FEMALE)	1	
ICS2	VJS2336A028	CONNECTOR (FEMALE)	1	
L1-L3	VLF0931	FILTER	3	
P213,14	VJP3151	CONNECTOR (MALE)	2	
Q1	UN2112	TRANSISTOR	1	
Q2	2SB710	TRANSISTOR	1	
Q3	UN2213	TRANSISTOR	1	
Q4	2SD602	TRANSISTOR	1	
Q5	UN2224	TRANSISTOR	1	
Q6-Q9	UN2213	TRANSISTOR	4	
Q10	UN2213	TRANSISTOR	1	
		RESISTORS		
R1-R9	ERJ6GEYJ104	M.RESISTOR CH1/10W 100K	9	
R10	ERJ6GEYJ104	M.RESISTOR CH1/10W 100K	1	
R11	ERJ6GEYJ103	M.RESISTOR CH1/10W 10K	1	
R12,13	ERJ6GEYJ562	M.RESISTOR CH1/10W 5.6K	2	
R14	ERJ6GEYJ222	M.RESISTOR CH1/10W 2.2K	1	
R15	ERJ6GEYJ474	M.RESISTOR CH1/10W 470K	1	
R16-18	ERJ6GEYJ473	M.RESISTOR CH1/10W 47K	3	
R19,20	ERJ6GEYJ104	M.RESISTOR CH1/10W 100K	2	
R21-23	ERJ6GEYJ473	M.RESISTOR CH1/10W 47K	3	
R24	ERJ6GEYJ562	M.RESISTOR CH1/10W 5.6K	1	
R25	ERJ6GEYJ103	M.RESISTOR CH1/10W 10K	1	
R26,27	ERJ6GEYJ104	M.RESISTOR CH1/10W 100K	2	
R28,29	ERJ6GEYJ103	M.RESISTOR CH1/10W 10K	2	
R30	ERJ8GCJ151	M.RESISTOR CH 1/8W 150	1	
R31-50	ERJ6GEYJ103	M.RESISTOR CH1/10W 10K	20	
R51-53	ERJ6GEYJ393	M.RESISTOR CH1/10W 39K	3	
R54	ERJ6GEYJ103	M.RESISTOR CH1/10W 10K	1	
R55,56	ERJ6GEYJ222	M.RESISTOR CH1/10W 2.2K	2	
R57,58	ERJ6GEYJ103	M.RESISTOR CH1/10W 10K	2	
R59,60	ERJ6GEYF333	M.RESISTOR CH1/10W 33K	2	
R61,62	ERJ6GEYJ564	M.RESISTOR CH1/10W 560K	2	
R63	ERJ6GEYJ103	M.RESISTOR CH1/10W 10K	1	
R64	ERJ6GEYJ104	M.RESISTOR CH1/10W 100K	1	
R65	ERJ6GEYJ332	M.RESISTOR CH1/10W 3.3K	1	
R66	ERJ6GEYJ474	M.RESISTOR CH1/10W 470K	1	
R67	ERJ6GEYJ105	M.RESISTOR CH1/10W 1M	1	
R68	ERJ6GEYJ222	M.RESISTOR CH1/10W 2.2K	1	
R69	ERJ6GEYJ104	M.RESISTOR CH1/10W 100K	1	
R70	ERJ8GCYJ220	M.RESISTOR CH 1/8W 22	1	
R71-88	ERJ6GEYJ103	M.RESISTOR CH1/10W 10K	18	
R89,90	ERJ6GEYJ223	M.RESISTOR CH1/10W 22K	2	
R91,92	ERJ6GEYJ331	M.RESISTOR CH1/10W 330	2	
R93	ERJ6GEYJ122	M.RESISTOR CH1/10W 1.2K	1	
R94,95	ERJ6GEYJ391	M.RESISTOR CH1/10W 390	2	
R96	ERJ6GEYJ122	M.RESISTOR CH1/10W 1.2K	1	
R97	ERJ6GEYJ473	M.RESISTOR CH1/10W 47K	1	
R98	ERJ6GEYJ103	M.RESISTOR CH1/10W 10K	1	
R99	ERJ6GEYJ104	M.RESISTOR CH1/10W 100K	1	
R100-10	ERJ6GEYJ104	M.RESISTOR CH1/10W 100K	11	
R111,12	ERJ6GEYJ562	M.RESISTOR CH1/10W 5.6K	2	
R113-22	ERJ6GEYJ104	M.RESISTOR CH1/10W 100K	10	
R123	ERJ6GEYJ105	M.RESISTOR CH1/10W 1M	1	
R124	ERJ6GEYJ241	M.RESISTOR CH1/10W 240	1	

S8 SUB 2 VEP84137A
S8 SUB 3 VEP84142A

Ref.No.	Part No.	Part Name & Description	Pcs	Remarks
RA1-A6	EXBLD8103G	COMBI.R-R 10K	6	
TP1-P6	VJR0646	TEST POINT	6	
TPGA1	VJR0646	TEST POINT	1	
TPGD1,D2	VJR0646	TEST POINT	2	
VR1	VRV0109B201	V.RESISTOR 200	1	
X1	VSX0150	CRYSTAL OSCILLATOR	1	
		MISCELLANEOUS		
	VGQ0291	P.C.BOARD NAME PLATE	1	
	VML2143	CARD PULLER	1	
	VML2144	CARD PULLER	1	
	VXA4420	P.C.BOARD SHIELD PLATE	1	
	XNG26E	NUT	4	
	XTV3+6FFR	SCREW	5	
	XYN26+C12	SCREW	4	
	VEP84111B	P.C.BOARD W/COMPONENT		
		S8 AUDIO PROCESS		
	VEP84158D	P.C.BOARD W/COMPONENT		FOR VEP84111B
		S8 SUB 1		
	VEP84137A	P.C.BOARD W/COMPONENT		FOR VEP84111B
		S8 SUB 2		
	VEP84142A	P.C.BOARD W/COMPONENT		FOR VEP84111B
		S8 SUB 3		
		CAPACITORS		
C1001	ECUM1E104ZFN	E.CAPACITOR 25V 0.1U	1	
C4001	ECUM1E104ZFN	E.CAPACITOR 25V 0.1U	1	
C4002,03	ECA1CXLV101	E.CAPACITOR 16V 100U	2	
C4004	ECA1CXS470	E.CAPACITOR 16V 47U	1	
C4005	ECA1CXLV101	E.CAPACITOR 16V 100U	1	
C4006	ECA1CXS470	E.CAPACITOR 16V 47U	1	
C4007	ECUM1H181JCN	C.CAPACITOR CH 50V 180P	1	
C4008	ECA1CXLV101	E.CAPACITOR 16V 100U	1	
C4009	ECA1CXS470	E.CAPACITOR 16V 47U	1	
C4010	ECUM1E104ZFN	E.CAPACITOR 25V 0.1U	1	
C4011,12	ECA1HXNV2R2	E.CAPACITOR 50V 2.2U	2	
C4020-25	ECUM1E104ZFN	E.CAPACITOR 25V 0.1U	6	
C4201	ECUM1H150JCN	C.CAPACITOR CH 50V 15P	1	
C4202	ECUM1H100DCN	C.CAPACITOR CH 50V 10P	1	
C4203	ECUM1E104ZFN	E.CAPACITOR 25V 0.1U	1	
C4401,02	ECUM1H121JCN	C.CAPACITOR CH 50V 120P	2	
C4403,04	ECUM1E104ZFN	E.CAPACITOR 25V 0.1U	2	
C4405	ECA1CXLV101	E.CAPACITOR 16V 100U	1	
C4406,07	ECUM1E104ZFN	E.CAPACITOR 25V 0.1U	2	
C4408	ECA1CXLV101	E.CAPACITOR 16V 100U	1	
C4409,10	ECUM1H103KBN	C.CAPACITOR CH 50V 0.01U	2	
C4411,12	ECUM1H101JCN	C.CAPACITOR CH 50V 100P	2	
C4413,14	ECA1CXS100	E.CAPACITOR 16V 10U	2	
C4551,52	ECUM1E104ZFN	E.CAPACITOR 25V 0.1U	2	
C4553	ECA1CXS100	E.CAPACITOR 16V 10U	1	
C4554	ECUM1H471JCN	C.CAPACITOR CH 50V 470P	1	
C4555	ECUM1E104ZFN	E.CAPACITOR 25V 0.1U	1	
C4556	ECA1CXS100	E.CAPACITOR 16V 10U	1	
C4557	ECUM1H472KBN	C.CAPACITOR CH 50V 4700P	1	
C4558,59	ECUM1H103ZFN	C.CAPACITOR CH 50V 0.01U	2	
C4560	ECUM1E104ZFN	E.CAPACITOR 25V 0.1U	1	
C4561	ECA1CXLV101	E.CAPACITOR 16V 100U	1	
C4562	ECUM1E104ZFN	E.CAPACITOR 25V 0.1U	1	
C4563,64	ECUM1H103ZFN	C.CAPACITOR CH 50V 0.01U	2	

Ref.No.	Part No.	Part Name & Description	Pcs	Remarks
C4565	ECUM1H220JCN	C.CAPACITOR CH 50V 22P	1	
C4566-68	ECUM1E104ZFN	E.CAPACITOR 25V 0.1U	3	
C4569	ECA1HXLV010	E.CAPACITOR 50V 1U	1	
C4901-04	ECUM1E104ZFN	E.CAPACITOR 25V 0.1U	4	
D4001-04	MA157	DIODE	4	
D4401-04	MA151K	DIODE	4	
IC1001	VSI0995	IC	1	
IC1002	MB8464A80LFF	IC	1	
IC4001	MC10124L	IC	1	
IC4002	MC10125L	IC	1	
IC4003	PC74HCT541T	IC	1	
IC4004,05	SN74LS541NS	IC	2	
IC4006,07	DS9637ACN	IC	2	
IC4008-10	SN75158P	IC	3	
IC4011	PC74HCT574	IC	1	
IC4051	MC74HC573AF	IC	1	
IC4052	VSI0930B	IC	1	
IC4053	UPD71055GB	IC	1	
IC4054,55	MC74HC74AF	IC	2	
IC4101	MN53030VPR	IC	1	
IC4151	MC74HC595AF	IC	1	
IC4152	74AC374SJ	IC	1	
IC4153	MC74HC595AF	IC	1	
IC4154	74AC374SJ	IC	1	
IC4155,56	MB8464A80LFF	IC	2	
IC4157	MC74HC04AF	IC	1	
IC4201	TMS320C25FNL	IC	1	
IC4202	VSI0925	IC	1	
IC4203	VSI0923	IC	1	
IC4204	MC74HC04AF	IC	1	
IC4205	MC74HC4075F	IC	1	
IC4251-53	MC74HC273AF	IC	3	
IC4254	MM74HC166M	IC	1	
IC4255-57	MC74HC273AF	IC	3	
IC4258	MM74HC166M	IC	1	
IC4401,02	AN78L05	IC	2	
IC4403,04	CD74AC04M	IC	2	
IC4406	L7A0541	IC	1	
IC4407	74AC157SJ	IC	1	
IC4408	L7A0541	IC	1	
IC4410	MB81C68A35PS	IC	1	
IC4412	VSI0926	IC	1	
IC4413,14	UPD42101G-3	IC	2	
IC4415	VSI0928B	IC	1	
IC4451	MN56200VPV	IC	1	
IC4452	L7A0651	IC	1	
IC4453-55	MC74HC541AF	IC	3	
IC4501	VSI0927A	IC	1	
IC4503	VSI0929	IC	1	
IC4505,06	MB8464A80LFF	IC	2	
IC4508	VSI0985B	IC	1	
IC4551	MN8305S	IC	1	
IC4552-54	NJM5532MD	IC	3	
IC4901	MC74HC541AF	IC	1	
IC4902	MB621926	IC	1	
IC4903	MB81C4256A8P	IC	1	
IC4904	MC74HC541AF	IC	1	
ICS1001	VJS3122A044	CONNECTOR (FEMALE)	1	
ICS4052	VJS2575	CONNECTOR (FEMALE)	1	
ICS4201	VJS3107	CONNECTOR (FEMALE)	1	
ICS4202,03	VJS2575	CONNECTOR (FEMALE)	2	
ICS4412	VJS3122A044	CONNECTOR (FEMALE)	1	
ICS4415	VJS3096328	CONNECTOR (FEMALE)	1	
ICS4501	VJS3096328	CONNECTOR (FEMALE)	1	
ICS4503	VJS3122A044	CONNECTOR (FEMALE)	1	
ICS4508	VJS3096328	CONNECTOR (FEMALE)	1	

Ref.No.	Part No.	Part Name & Description	Pcs	Remarks
L4001-06	VLF0931	FILTER	6	
L4008	VLF0931	FILTER	1	
L4201	VLQEL05S1R8J	COIL 1.8UH	1	
LPF4551	VLF0928	FILTER	1	
OSC1,C2	VSX0392	CRYSTAL OSCILLATOR	2	
P1,P2	VJP2509	CONNECTOR (MALE)	2	
P215,16	VJP3151	CONNECTOR (MALE)	2	
PC4001-11	ECUM1E104ZFN	E.CAPACITOR 25V 0.1U	11	
PC4051-55	ECUM1E104ZFN	E.CAPACITOR 25V 0.1U	5	
PC4101	ECUM1E104ZFN	E.CAPACITOR 25V 0.1U	1	
PC4151-57	ECUM1E104ZFN	E.CAPACITOR 25V 0.1U	7	
PC4201-05	ECUM1E104ZFN	E.CAPACITOR 25V 0.1U	5	
PC4251-58	ECUM1E104ZFN	E.CAPACITOR 25V 0.1U	8	
PC4401-04	ECUM1E104ZFN	E.CAPACITOR 25V 0.1U	4	
PC4406-08	ECUM1E104ZFN	E.CAPACITOR 25V 0.1U	3	
PC4410	ECUM1E104ZFN	E.CAPACITOR 25V 0.1U	1	
PC4412-15	ECUM1E104ZFN	E.CAPACITOR 25V 0.1U	4	
PC4451-55	ECUM1E104ZFN	E.CAPACITOR 25V 0.1U	5	
PC4501	ECUM1E104ZFN	E.CAPACITOR 25V 0.1U	1	
PC4503	ECUM1E104ZFN	E.CAPACITOR 25V 0.1U	1	
PC4505-10	ECUM1E104ZFN	E.CAPACITOR 25V 0.1U	6	
P1S	VJS3109	CONNECTOR (FEMALE)	1	
P2S	VJS3109	CONNECTOR (FEMALE)	1	
Q4401-06	2SC2188	TRANSISTOR	6	
Q4407,08	2SJ43	TRANSISTOR	2	
		RESISTORS		
R4001-04	ERJ6GEYJ101	M.RESISTOR CH1/10W 100	4	
R4006-13	ERJ6GEYJ101	M.RESISTOR CH1/10W 100	8	
R4014,15	ERJ6GEYJ471	M.RESISTOR CH1/10W 470	2	
R4016-22	ERJ6GEYJ101	M.RESISTOR CH1/10W 100	7	
R4401,02	ERJ6GEYJ102	M.RESISTOR CH1/10W 1K	2	
R4403,04	ERJ6GEYJ105	M.RESISTOR CH1/10W 1M	2	
R4405,06	ERJ6GEYJ332	M.RESISTOR CH1/10W 3.3K	2	
R4407,08	ERJ6GEYJ103	M.RESISTOR CH1/10W 10K	2	
R4409,10	ERJ6GEYJ332	M.RESISTOR CH1/10W 3.3K	2	
R4411,12	ERJ6GEYJ101	M.RESISTOR CH1/10W 100	2	
R4551	ERJ6GEYJ101	M.RESISTOR CH1/10W 100	1	
R4552	ERJ6GEYJ152	M.RESISTOR CH1/10W 1.5K	1	
R4553-55	ERJ6GEYJ823	M.RESISTOR CH1/10W 82K	3	
R4556	ERJ6GEYJ101	M.RESISTOR CH1/10W 100	1	
R4557	ERJ6GEYJ183	M.RESISTOR CH1/10W 18K	1	
R4558	ERJ6GEYJ822	M.RESISTOR CH1/10W 8.2K	1	
R4560	ERJ6GEYF472	M.RESISTOR CH1/10W 4.7K	1	
R4561	ERJ6GEYJ101	M.RESISTOR CH1/10W 100	1	
R4562	ERJ6GEYJ223	M.RESISTOR CH1/10W 22K	1	
R4563-67	ERJ6GEYF472	M.RESISTOR CH1/10W 4.7K	5	
R4568-70	ERJ6GEYJ101	M.RESISTOR CH1/10W 100	3	
R4571	ERJ6GEYF333	M.RESISTOR CH1/10W 33K	1	
R4572	ERJ6GEYJ682	M.RESISTOR CH1/10W 6.8K	1	
R4573	ERJ6GEYF472	M.RESISTOR CH1/10W 4.7K	1	
R4901	ERJ6GEY0R00	M.RESISTOR CH 1/10W 0	1	
R4904	ERJ6GEY0R00	M.RESISTOR CH 1/10W 0	1	
R4905	ERJ6GEYJ103	M.RESISTOR CH1/10W 10K	1	
R4906	ERJ6GEY0R00	M.RESISTOR CH 1/10W 0	1	

S9 VIDEO A/D PLL VEP88073B
S9 SUB VEP88100B

Ref.No.	Part No.	Part Name & Description	Pcs	Remarks
T1-T4	VLT0654	TRANSFORMER	4	
TP4101	VJR0646	TEST POINT	1	
TP4401,02	VJR0646	TEST POINT	2	
TP4451	VJR0646	TEST POINT	1	
TP4453	VJR0400Y	TEST POINT	1	
TP4456	VJR0646	TEST POINT	1	
TPG4001-03	VJR0646	TEST POINT	3	
VR4401,02	VRV0109B202	V.RESISTOR 2K	2	
VR4403,04	VRV0109B501	V.RESISTOR 500	2	
VR4551	VRV0109B502	V.RESISTOR 5K	1	
X4201	VSX0453	CRYSTAL OSCILLATOR	1	
		MISCELLANEOUS		
	VGQ0291	P.C.BOARD NAME PLATE	1	
	VML2143	CARD PULLER	1	
	VML2144	CARD PULLER	1	
	VMZ1970	BARRIER	1	
	VXA4420	P.C.BOARD SHIELD PLATE	1	
	XNG26E	NUT	4	
	XTV3+6FFR	SCREW	5	
	XYN26+C12	SCREW	4	
	VJP2509	CONNECTOR (MALE)	1	
	VJS3109	CONNECTOR (FEMALE)	1	
	VEP88073B	P.C.BOARD W/COMPONENT		
		S9 VIDEO A/D PLL		
	VEP88100B	P.C.BOARD W/COMPONENT		FOR VEP88073B
		S9 SUB		
		CAPACITORS		
C101	ECUM1E104ZFN	E.CAPACITOR 25V 0.1U	1	
C102	ECEA1CGE331	E.CAPACITOR 16V 330U	1	
C103,04	ECUM1E104ZFN	E.CAPACITOR 25V 0.1U	2	
C105	ECEA1CGE471	E.CAPACITOR 16V 470U	1	
C106	ECUM1E104ZFN	E.CAPACITOR 25V 0.1U	1	
C107,08	ECA1CXNV470	E.CAPACITOR 16V 47U	2	
C109	ECA1VXLV470	E.CAPACITOR 35V 47U	1	
C110	ECUM1E104ZFN	E.CAPACITOR 25V 0.1U	1	
C111	ECA1VXLV470	E.CAPACITOR 35V 47U	1	
C112	ECUM1E104ZFN	E.CAPACITOR 25V 0.1U	1	
C113,14	ECA1AXLV331X	E.CAPACITOR 10V 330U	2	
C115	ECUM1E104ZFN	E.CAPACITOR 25V 0.1U	1	
C116	ECA1HXNV4R7	E.CAPACITOR 50V 4.7U	1	
C117	ECUM1E104ZFN	E.CAPACITOR 25V 0.1U	1	
C118	ECUM1H391JN	C.CAPACITOR CH 50V 390P	1	
C119	ECUM1H020DCN	C.CAPACITOR CH 50V 2P	1	
C120-22	ECUM1E104ZFN	E.CAPACITOR 25V 0.1U	3	
C124	ECA1CXLV101	E.CAPACITOR 16V 100U	1	
C125,26	ECUM1E104ZFN	E.CAPACITOR 25V 0.1U	2	
C127,28	ECA1VXLV470	E.CAPACITOR 35V 47U	2	
C129	ECUM1E104ZFN	E.CAPACITOR 25V 0.1U	1	
C130	ECUM1H331JCN	C.CAPACITOR CH 50V 330P	1	
C131	ECUM1H470JCN	C.CAPACITOR CH 50V 47P	1	
C132,33	ECQB1H104JF	P.CAPACITOR 50V 0.1U	2	
C134-42	ECUM1E104ZFN	E.CAPACITOR 25V 0.1U	9	
C144	ECUM1E104ZFN	E.CAPACITOR 25V 0.1U	1	
C146-56	ECUM1E104ZFN	E.CAPACITOR 25V 0.1U	11	
C158-63	ECUM1E104ZFN	E.CAPACITOR 25V 0.1U	6	
C165,66	ECUM1E104ZFN	E.CAPACITOR 25V 0.1U	2	
C167	ECA1VXLV470	E.CAPACITOR 35V 47U	1	
C168	ECUM1H122JN	C.CAPACITOR CH 50V 1200P	1	
C169	ECUM1H150JCN	C.CAPACITOR CH 50V 15P	1	
C170	ECRHA040E41	TRIMMER	1	
C172	ECUM1H100DCN	C.CAPACITOR CH 50V 10P	1	
C173	ECUM1H270JCN	C.CAPACITOR CH 50V 27P	1	
C174	ECUM1E104ZFN	E.CAPACITOR 25V 0.1U	1	
C201,02	ECUM1E104ZFN	E.CAPACITOR 25V 0.1U	2	
C203,04	ECA1VXLV470	E.CAPACITOR 35V 47U	2	
C205	ECUM1E104ZFN	E.CAPACITOR 25V 0.1U	1	
C206	ECUM1H180JCN	C.CAPACITOR CH 50V 18P	1	
C207	ECUM1H680JCN	C.CAPACITOR CH 50V 68P	1	
C208,09	ECQB1H104JF	P.CAPACITOR 50V 0.1U	2	
C210	ECA1HXNV010	E.CAPACITOR 50V 1U	1	
C211	ECUM1E104ZFN	E.CAPACITOR 25V 0.1U	1	
C212	ECUM1H103KBN	C.CAPACITOR CH 50V 0.01U	1	
C213	ECUM1H820JCN	C.CAPACITOR CH 50V 82P	1	
C214,15	ECUM1H103KBN	C.CAPACITOR CH 50V 0.01U	2	
C216	ECUM1H470JCN	C.CAPACITOR CH 50V 47P	1	
C217	ECUM1E104ZFN	E.CAPACITOR 25V 0.1U	1	
C218	ECUM1H470JCN	C.CAPACITOR CH 50V 47P	1	
C219	ECQB1H104JF	P.CAPACITOR 50V 0.1U	1	
C220	ECUM1E104ZFN	E.CAPACITOR 25V 0.1U	1	
C221	ECUM1H470JCN	C.CAPACITOR CH 50V 47P	1	
C222	ECUM1E104ZFN	E.CAPACITOR 25V 0.1U	1	
C223	ECUM1H470JCN	C.CAPACITOR CH 50V 47P	1	
C224	ECA1CXLV101	E.CAPACITOR 16V 100U	1	
C225	ECUM1E104ZFN	E.CAPACITOR 25V 0.1U	1	
C226	ECUM1H270JCN	C.CAPACITOR CH 50V 27P	1	
C227	ECUM1H103KBN	C.CAPACITOR CH 50V 0.01U	1	
C228	ECUM1E104ZFN	E.CAPACITOR 25V 0.1U	1	
C229	ECUM1H220JCN	C.CAPACITOR CH 50V 22P	1	
C230	ECUM1E104ZFN	E.CAPACITOR 25V 0.1U	1	
C231	ECQB1H104JF	P.CAPACITOR 50V 0.1U	1	
C232,33	ECUM1E104ZFN	E.CAPACITOR 25V 0.1U	2	
C234	ECQB1H104JF	P.CAPACITOR 50V 0.1U	1	
C235	ECA1HXNV010	E.CAPACITOR 50V 1U	1	
C236-42	ECUM1E104ZFN	E.CAPACITOR 25V 0.1U	7	
C243	ECA1CXLV101	E.CAPACITOR 16V 100U	1	
C244-46	ECUM1E104ZFN	E.CAPACITOR 25V 0.1U	3	
C247	ECA1CXLV101	E.CAPACITOR 16V 100U	1	
C248-51	ECUM1E104ZFN	E.CAPACITOR 25V 0.1U	4	
C252	ECA1CXLV101	E.CAPACITOR 16V 100U	1	
C253	ECUM1E104ZFN	E.CAPACITOR 25V 0.1U	1	
C254	ECA1CXLV101	E.CAPACITOR 16V 100U	1	
C255,56	ECUM1E104ZFN	E.CAPACITOR 25V 0.1U	2	
C257	ECQB1H223JF	P.CAPACITOR 50V 0.022U	1	
C258	ECUM1E104ZFN	E.CAPACITOR 25V 0.1U	1	
C259	ECUM1H102JN	C.CAPACITOR CH 50V 1000P	1	
C260-62	ECUM1E104ZFN	E.CAPACITOR 25V 0.1U	3	
C264	ECA1CXLV101	E.CAPACITOR 16V 100U	1	
C265	ECA1HXS010	E.CAPACITOR 50V 1U	1	
C266	ECUM1H472KBN	C.CAPACITOR CH 50V 4700P	1	
C301-13	ECUM1E104ZFN	E.CAPACITOR 25V 0.1U	13	
C314	ECA1CXLV101	E.CAPACITOR 16V 100U	1	
C315	ECUM1E104ZFN	E.CAPACITOR 25V 0.1U	1	
C316	ECA1CXLV101	E.CAPACITOR 16V 100U	1	
C317	ECUM1E104ZFN	E.CAPACITOR 25V 0.1U	1	
C318	ECA1CXLV101	E.CAPACITOR 16V 100U	1	
C319	ECUM1E104ZFN	E.CAPACITOR 25V 0.1U	1	
C320	ECA1CXLV101	E.CAPACITOR 16V 100U	1	
C321	ECUM1E104ZFN	E.CAPACITOR 25V 0.1U	1	
C322	ECA1CXLV101	E.CAPACITOR 16V 100U	1	
C323	ECUM1E104ZFN	E.CAPACITOR 25V 0.1U	1	
C324	ECA1CXLV101	E.CAPACITOR 16V 100U	1	
C325	ECUM1E104ZFN	E.CAPACITOR 25V 0.1U	1	
C326	ECUM1H560JCN	C.CAPACITOR CH 50V 56P	1	
C401	ECA1VXLV470	E.CAPACITOR 35V 47U	1	
C402	ECUM1E104ZFN	E.CAPACITOR 25V 0.1U	1	

S9

Ref.No.		Part No.	Part Name & Description	Pcs	Remarks
C403		ECA1CXLV101	E.CAPACITOR 16V 100U	1	
C404		ECUM1E104ZFN	E.CAPACITOR 25V 0.1U	1	
C405		ECQM1H822JF	P.CAPACITOR 50V 8200P	1	
C406		ECA1CXLV101	E.CAPACITOR 16V 100U	1	
C407,08		ECUM1E104ZFN	E.CAPACITOR 25V 0.1U	2	
C409		ECUM1H271JCN	C.CAPACITOR CH 50V 270P	1	
C410		ECA1HXS010	E.CAPACITOR 50V 1U	1	
C411		ECQM1H224JF	P.CAPACITOR 50V 0.22U	1	
C412		ECUM1E104ZFN	E.CAPACITOR 25V 0.1U	1	
C413		ECUM1H391JN	C.CAPACITOR CH 50V 390P	1	
C414,15		ECUM1E104ZFN	E.CAPACITOR 25V 0.1U	2	
C416		ECA1CXLV101	E.CAPACITOR 16V 100U	1	
C417		ECUM1E104ZFN	E.CAPACITOR 25V 0.1U	1	
C418		ECA1VXLV470	E.CAPACITOR 35V 47U	1	
C419		ECUM1E104ZFN	E.CAPACITOR 25V 0.1U	1	
C420		ECA1CXLV101	E.CAPACITOR 16V 100U	1	
C421-23		ECUM1E104ZFN	E.CAPACITOR 25V 0.1U	3	
C424		ECQB1H104JF	P.CAPACITOR 50V 0.1U	1	
C425		ECUM1E104ZFN	E.CAPACITOR 25V 0.1U	1	
C426		ECUM1H822KBN	C.CAPACITOR CH 50V 8200P	1	
C427-29		ECUM1E104ZFN	E.CAPACITOR 25V 0.1U	3	
C430		ECA1CXLV101	E.CAPACITOR 16V 100U	1	
C431-34		ECUM1E104ZFN	E.CAPACITOR 25V 0.1U	4	
C435		ECQB1H104JF	P.CAPACITOR 50V 0.1U	1	
C436-40		ECUM1E104ZFN	E.CAPACITOR 25V 0.1U	5	
C501-04		ECUM1E104ZFN	E.CAPACITOR 25V 0.1U	4	
C506		ECUM1E104ZFN	E.CAPACITOR 25V 0.1U	1	
C508-11		ECUM1E104ZFN	E.CAPACITOR 25V 0.1U	4	
C601,02		ECUM1E104ZFN	E.CAPACITOR 25V 0.1U	2	
C603		ECUM1H101JCN	C.CAPACITOR CH 50V 100P	1	
C604		ECUM1H122JN	C.CAPACITOR CH 50V 1200P	1	
C605		ECUM1H101JCN	C.CAPACITOR CH 50V 100P	1	
C606-08		ECUM1E104ZFN	E.CAPACITOR 25V 0.1U	3	
C609		ECQM1H332JF	P.CAPACITOR 50V 3300P	1	
C610		ECUM1H103KBN	C.CAPACITOR CH 50V 0.01U	1	
C611-15		ECUM1E104ZFN	E.CAPACITOR 25V 0.1U	5	
C616		ECA1VXLV470	E.CAPACITOR 35V 47U	1	
C617-20		ECUM1E104ZFN	E.CAPACITOR 25V 0.1U	4	
C621		ECUM1H221JCN	C.CAPACITOR CH 50V 220P	1	
C622		ECUM1H102JN	C.CAPACITOR CH 50V 1000P	1	
C623		ECUM1E104ZFN	E.CAPACITOR 25V 0.1U	1	
C624		ECQB1H223JF	P.CAPACITOR 50V 0.022U	1	
C625-28		ECUM1E104ZFN	E.CAPACITOR 25V 0.1U	4	
C629		ECA1VXLV470	E.CAPACITOR 35V 47U	1	
C630-33		ECUM1E104ZFN	E.CAPACITOR 25V 0.1U	4	
C701		ECUM1E104ZFN	E.CAPACITOR 25V 0.1U	1	
C702		ECQM1H683JF	P.CAPACITOR 50V 0.068U	1	
C703,04		ECUM1E104ZFN	E.CAPACITOR 25V 0.1U	2	
C706-08		ECUM1E104ZFN	E.CAPACITOR 25V 0.1U	3	
C709		ECUM1H820JCN	C.CAPACITOR CH 50V 82P	1	
C710,11		ECUM1E104ZFN	E.CAPACITOR 25V 0.1U	2	
C712		ECUM1H102JN	C.CAPACITOR CH 50V 1000P	1	
C713		ECUM1E104ZFN	E.CAPACITOR 25V 0.1U	1	
C714		ECQB1H223JF	P.CAPACITOR 50V 0.022U	1	
C715,16		ECUM1E104ZFN	E.CAPACITOR 25V 0.1U	2	
C717,18		ECA1VXLV470	E.CAPACITOR 35V 47U	2	
C719		ECUM1H121JCN	C.CAPACITOR CH 50V 120P	1	
C720		ECUM1H221JCN	C.CAPACITOR CH 50V 220P	1	
C721		ECUM1H181JCN	C.CAPACITOR CH 50V 180P	1	
C722		ECUM1H103ZFN	C.CAPACITOR CH 50V 0.01U	1	
C723		ECUM1H102JN	C.CAPACITOR CH 50V 1000P	1	
C724		ECUM1E104ZFN	E.CAPACITOR 25V 0.1U	1	
C725		ECA1CXS100	E.CAPACITOR 16V 10U	1	
C726		ECA1HXNV4R7	E.CAPACITOR 50V 4.7U	1	
C727,28		ECUM1H103ZFN	C.CAPACITOR CH 50V 0.01U	2	
C729,30		ECUM1E104ZFN	E.CAPACITOR 25V 0.1U	2	
C731,32		ECA1HXLV2R2	E.CAPACITOR 50V 2.2U	2	
C733-42		ECUM1E104ZFN	E.CAPACITOR 25V 0.1U	10	
D101		MA3160-M	DIODE	1	
D102		1SZ53	DIODE	1	
D201		MA151K	DIODE	1	
D202		MA151WK	DIODE	1	

Ref.No.		Part No.	Part Name & Description	Pcs	Remarks
D401		MA157	DIODE	1	
D402,03		MA3051M	DIODE	2	
D405,06		MA151K	DIODE	2	
D701		MA157	DIODE	1	
D702-05		MA151K	DIODE	4	
FL101		VLF0903	FILTER	1	
IC1		VSI1209	IC	1	
IC2		VSI1210	IC	1	
IC101		AN78N09	IC	1	
IC102		AN79N09	IC	1	
IC103		NE5539D	IC	1	
IC104		NJM084M	IC	1	
IC105,06		NJM4560MD	IC	2	
IC108		TDC1038N6C	IC	1	
IC109		MC74HC574AF	IC	1	
IC110,11		MC10124L	IC	2	
IC113		TDC1038N6C	IC	1	
IC114		MC74HC574AF	IC	1	
IC201		AN78N09	IC	1	
IC202		AN91A12S	IC	1	
IC203,04		MM74HC221AM	IC	2	
IC205		SN74LS123NS	IC	1	
IC206		NJM311M	IC	1	
IC207		MC74HC00AF	IC	1	
IC208		NJM319M	IC	1	
IC209		NJM084M	IC	1	
IC210		MC74HC4053F	IC	1	
IC211		NJM082BM	IC	1	
IC212		AN78N05	IC	1	
IC213		CXD1175AM	IC	1	
IC214		UPC624C	IC	1	
IC215		NJM4558M	IC	1	
IC216		MC74HC574AF	IC	1	
IC217		MC74HC74AF	IC	1	
IC301,02		MC74HC138AF	IC	2	
IC303		MC74HC573AF	IC	1	
IC304,05		UPD71055GB	IC	2	
IC306		MC10124L	IC	1	
IC307		MC10104L	IC	1	
IC308		MC10125L	IC	1	
IC309		SN74AS244NS	IC	1	
IC310		SN74LS08NS	IC	1	
IC401		MC74HC4053F	IC	1	
IC402		NJM084M	IC	1	
IC403		AN78L05	IC	1	
IC404		MC74HC365F	IC	1	
IC405		NJM082BM	IC	1	
IC406		MC74HC04AF	IC	1	
IC407		AN78L05	IC	1	
IC408		SN74ALS574B	IC	1	
IC409		SN74S85NS	IC	1	
IC410		VSI0880	IC	1	
IC411		MC74HC74AF	IC	1	
IC412		SN74LS123NS	IC	1	
IC413		MC74HC4053F	IC	1	
IC502		VSI0877	IC	1	
IC503		ZR33891PQ-20	IC	1	
IC504		VSI0879B	IC	1	
IC505		HM63021P	IC	1	
IC507,08		SN74S85NS	IC	2	
IC509,10		MC74HC74AF	IC	2	
IC601		MN53015VZW	IC	1	
IC602		SN74LS221NS	IC	1	
IC603		MC74HC04AF	IC	1	
IC604		74F00SJ	IC	1	
IC605		UPD65022F210	IC	1	
IC606		AN78N09	IC	1	
IC607		UPC624C	IC	1	
IC608		NJM082BM	IC	1	

Ref.No.	Part No.	Part Name & Description	Pcs	Remarks
IC609	NJM319M	IC	1	
IC610	AN79N09	IC	1	
IC611	VSI0881C	IC	1	
IC701	SN74LS221NS	IC	1	
IC702-04	SN74AS109NS	IC	3	
IC706	MC74HC00AF	IC	1	
IC707	MC74HC86F	IC	1	
IC708	MC74HC163AF	IC	1	
IC709	NJM084M	IC	1	
IC710	NJM319M	IC	1	
IC711	MC14538BF	IC	1	
IC712	NJM084M	IC	1	
IC713	MC74HC74AF	IC	1	
IC714	MB40576P	IC	1	
IC715	MC74HC574AF	IC	1	
ICS108	VJS2577	CONNECTOR (FEMALE)	1	
ICS113	VJS2577	CONNECTOR (FEMALE)	1	
ICS410	VJS2575	CONNECTOR (FEMALE)	1	
ICS502	VJS2575	CONNECTOR (FEMALE)	1	
ICS504	VJS2575	CONNECTOR (FEMALE)	1	
ICS611	VJS2575	CONNECTOR (FEMALE)	1	
L101-04	VLQEL05S220K	COIL 22UH	4	
L105	VLQEL05S821J	COIL 820UH	1	
L109	VLP0017	COIL	1	
L201	VLQEL05S221J	COIL 220UH	1	
L202	VLQEL05S220K	COIL 22UH	1	
L203	VLQEL05S470J	COIL 47UH	1	
L204	VLP0017	COIL	1	
L205-07	VLQEL05S220K	COIL 22UH	3	
L301,02	VLP0017	COIL	2	
L304-07	VLP0017	COIL	4	
L401-04	VLQEL05S220K	COIL 22UH	4	
L701,02	VLQEL05S220K	COIL 22UH	2	
P1	VJP1243T	CONNECTOR (MALE)	1	
P1,P2	VJR0421	PIN	2	
P217,18	VJP3151	CONNECTOR (MALE)	2	
Q101	2SB709-R	TRANSISTOR	1	
Q102,03	2SD636	TRANSISTOR	2	
Q104	2SD601-R	TRANSISTOR	1	
Q105,06	2SC2295-B	TRANSISTOR	2	
Q107,08	2SA1022-B	TRANSISTOR	2	
Q109	2SD601-R	TRANSISTOR	1	
Q111	2SB793-R	TRANSISTOR	1	
Q112	2SK198-P	TRANSISTOR	1	
Q113	2SB641-R	TRANSISTOR	1	
Q114	2SB709-R	TRANSISTOR	1	
Q201,02	2SB709-R	TRANSISTOR	2	
Q401	2SD601-R	TRANSISTOR	1	
Q601	2SB709-R	TRANSISTOR	1	
Q701	2SD601-R	TRANSISTOR	1	
Q702	2SK301-PQR	TRANSISTOR	1	
Q703,04	2SC1216	TRANSISTOR	2	
Q705	2SD601-R	TRANSISTOR	1	
Q706	2SK301-PQR	TRANSISTOR	1	
Q707	UN2212	TRANSISTOR	1	
		RESISTORS		
R101	VRE0034E103	M.RESISTOR CH 1/10W 10K	1	
R102-05	VRE0034E222	M.RESISTOR CH 1/10W 2.2K	4	
R106	VRE0034E221	M.RESISTOR CH 1/10W 220	1	
R107	VRE0034E392	M.RESISTOR CH 1/10W 3.9K	1	
R108	VRE0034E221	M.RESISTOR CH 1/10W 220	1	
R109,10	VRE0034E750	M.RESISTOR CH 1/10W 75	2	
R111	VRE0034E122	M.RESISTOR CH 1/10W 1.2K	1	

Ref.No.	Part No.	Part Name & Description	Pcs	Remarks
R112,13	VRE0034E681	M.RESISTOR CH 1/10W 680	2	
R114	VRE0034E471	M.RESISTOR CH 1/10W 470	1	
R115	VRE0034E821	M.RESISTOR CH 1/10W 820	1	
R116	VRE0034E470	M.RESISTOR CH 1/10W 47	1	
R117	VRE0034E222	M.RESISTOR CH 1/10W 2.2K	1	
R118	VRE0034E470	M.RESISTOR CH 1/10W 47	1	
R119	VRE0034E102	M.RESISTOR CH 1/10W 1K	1	
R120	VRE0034E471	M.RESISTOR CH 1/10W 470	1	
R121	VRE0034E221	M.RESISTOR CH 1/10W 220	1	
R122	VRE0034E821	M.RESISTOR CH 1/10W 820	1	
R123,24	VRE0034E470	M.RESISTOR CH 1/10W 47	2	
R125	VRE0034E222	M.RESISTOR CH 1/10W 2.2K	1	
R126,27	VRE0034E122	M.RESISTOR CH 1/10W 1.2K	2	
R128	VRE0034E221	M.RESISTOR CH 1/10W 220	1	
R129	VRE0034E332	M.RESISTOR CH 1/10W 3.3K	1	
R130	VRE0034E100	M.RESISTOR CH 1/10W 10	1	
R131	VRE0034E101	M.RESISTOR CH 1/10W 100	1	
R132	VRE0034E102	M.RESISTOR CH 1/10W 1K	1	
R133	VRE0034E561	M.RESISTOR CH 1/10W 560	1	
R134	VRE0034E100	M.RESISTOR CH 1/10W 10	1	
R135	VRE0034E102	M.RESISTOR CH 1/10W 1K	1	
R137	VRE0034E101	M.RESISTOR CH 1/10W 100	1	
R139	VRE0034E102	M.RESISTOR CH 1/10W 1K	1	
R140	VRE0034E222	M.RESISTOR CH 1/10W 2.2K	1	
R141,42	VRE0034E105	M.RESISTOR CH 1/10W 1000K	2	
R143,44	VRE0034E101	M.RESISTOR CH 1/10W 100	2	
R145	VRE0034E102	M.RESISTOR CH 1/10W 1K	1	
R146	VRE0034E103	M.RESISTOR CH 1/10W 10K	1	
R147	VRE0034E432	M.RESISTOR CH 1/10W 4.3K	1	
R148	VRE0034E153	M.RESISTOR CH 1/10W 15K	1	
R149,50	VRE0034E102	M.RESISTOR CH 1/10W 1K	2	
R151	VRE0034E272	M.RESISTOR CH 1/10W 2.7K	1	
R152	VRE0034E152	M.RESISTOR CH 1/10W 1.5K	1	
R153	VRE0034E271	M.RESISTOR CH 1/10W 270	1	
R154,55	VRE0034E181	M.RESISTOR CH 1/10W 180	2	
R157-72	ERJ6GEYJ471	M.RESISTOR CH1/10W 470	16	
R189	VRE0034E822	M.RESISTOR CH 1/10W 8.2K	1	
R190	VRE0034E123	M.RESISTOR CH 1/10W 12K	1	
R191	VRE0034E104	M.RESISTOR CH 1/10W 100K	1	
R192	VRE0034E683	M.RESISTOR CH 1/10W 68K	1	
R193	VRE0034E302	M.RESISTOR CH 1/10W 3K	1	
R194	VRE0034E242	M.RESISTOR CH 1/10W 2.4K	1	
R195	ERJ6GEY0R00	M.RESISTOR CH 1/10W 0	1	
R203	ERJ6GEYJ221	M.RESISTOR CH1/10W 220	1	
R204-06	ERJ6GEYJ222	M.RESISTOR CH1/10W 2.2K	3	
R207	ERJ6GEYJ332	M.RESISTOR CH1/10W 3.3K	1	
R208,09	ERJ6GEYJ822	M.RESISTOR CH1/10W 8.2K	2	
R210	ERJ6GEYJ103	M.RESISTOR CH1/10W 10K	1	
R211	ERJ6GEYJ684	M.RESISTOR CH1/10W 680K	1	
R212	ERJ6GEYJ104	M.RESISTOR CH1/10W 100K	1	
R213	ERJ6GEYF333	M.RESISTOR CH1/10W 33K	1	
R214	ERJ6GEYG153	M.RESISTOR CH1/10W 15K	1	
R215	VRE0034E303	M.RESISTOR CH 1/10W 30K	1	
R216	ERJ6GEYJ393	M.RESISTOR CH1/10W 39K	1	
R217	ERJ6GEYF124	M.RESISTOR CH1/10W 120K	1	
R218	ERJ6GEYJ102	M.RESISTOR CH1/10W 1K	1	
R219	ERJ6GEYJ103	M.RESISTOR CH1/10W 10K	1	
R220	ERJ6GEYJ560	M.RESISTOR CH1/10W 56	1	
R221	ERJ6GEYJ102	M.RESISTOR CH1/10W 1K	1	
R222	ERJ6GEYJ223	M.RESISTOR CH1/10W 22K	1	
R223	ERJ6GEYF124	M.RESISTOR CH1/10W 120K	1	
R224	ERJ6GEYJ103	M.RESISTOR CH1/10W 10K	1	
R225	ERJ6GEYF472	M.RESISTOR CH1/10W 4.7K	1	
R226	ERJ6GEYJ563	M.RESISTOR CH1/10W 56K	1	
R227	ERJ6GEYJ105	M.RESISTOR CH1/10W 1M	1	
R228	ERJ6GEYJ103	M.RESISTOR CH1/10W 10K	1	
R229	ERJ6GEYJ105	M.RESISTOR CH1/10W 1M	1	
R230	ERJ6GEYJ122	M.RESISTOR CH1/10W 1.2K	1	
R231	ERJ6GEYJ222	M.RESISTOR CH1/10W 2.2K	1	
R232	ERJ6GEYJ220	M.RESISTOR CH1/10W 22	1	
R233	ERJ6GEYJ620	M.RESISTOR CH1/10W 62	1	
R234-49	ERJ6GEYJ101	M.RESISTOR CH1/10W 100	16	
R250	ERJ6GEYJ822	M.RESISTOR CH1/10W 8.2K	1	
R251	ERJ6GEYF472	M.RESISTOR CH1/10W 4.7K	1	
R252	ERJ6GEYJ822	M.RESISTOR CH1/10W 8.2K	1	

M1

M1 DRIVE VEP82068A

M1 SUB 1 VEP82086A

Ref.No.	Part No.	Part Name & Description	Pcs	Remarks
R253	ERJ6GEYF472	M.RESISTOR CH1/10W 4.7K	1	
R254	ERJ6GEYJ101	M.RESISTOR CH1/10W 100	1	
R255	ERJ6GEYJ103	M.RESISTOR CH1/10W 10K	1	
R256	ERJ6GEYG153	M.RESISTOR CH1/10W 15K	1	
R257	ERJ6GEYJ104	M.RESISTOR CH1/10W 100K	1	
R258	ERJ6GEYJ221	M.RESISTOR CH1/10W 220	1	
R301-12	ERJ6GEYJ471	M.RESISTOR CH1/10W 470	12	
R313-16	ERJ6GEYJ101	M.RESISTOR CH1/10W 100	4	
R317,18	ERJ6GEYJ330	M.RESISTOR CH1/10W 33	2	
R401	ERJ6GEYJ682	M.RESISTOR CH1/10W 6.8K	1	
R402	ERJ6GEYJ222	M.RESISTOR CH1/10W 2.2K	1	
R403	ERJ6GEYJ103	M.RESISTOR CH1/10W 10K	1	
R404	ERJ6GEYJ821	M.RESISTOR CH1/10W 820	1	
R405	ERJ6GEYJ473	M.RESISTOR CH1/10W 47K	1	
R406	ERJ6GEYJ103	M.RESISTOR CH1/10W 10K	1	
R407	ERJ6GEYJ105	M.RESISTOR CH1/10W 1M	1	
R408	ERJ6GEYJ223	M.RESISTOR CH1/10W 22K	1	
R409	ERJ6GEYJ122	M.RESISTOR CH1/10W 1.2K	1	
R410	ERJ6GEYJ222	M.RESISTOR CH1/10W 2.2K	1	
R411	ERJ6GEYJ102	M.RESISTOR CH1/10W 1K	1	
R412,13	ERJ6GEYJ103	M.RESISTOR CH1/10W 10K	2	
R414,15	ERJ6GEYJ223	M.RESISTOR CH1/10W 22K	2	
R416	ERJ6GEYJ105	M.RESISTOR CH1/10W 1M	1	
R417	ERJ6GEYJ103	M.RESISTOR CH1/10W 10K	1	
R418	ERJ6GEYJ224	M.RESISTOR CH1/10W 220K	1	
R419	ERJ6GEYJ682	M.RESISTOR CH1/10W 6.8K	1	
R501-04	ERJ6GEYJ103	M.RESISTOR CH1/10W 10K	4	
R601	ERJ6GEYJ331	M.RESISTOR CH1/10W 330	1	
R602,03	ERJ6GEYJ103	M.RESISTOR CH1/10W 10K	2	
R605	ERJ6GEY0R00	M.RESISTOR CH 1/10W 0	1	
R606-08	ERJ6GEYJ103	M.RESISTOR CH1/10W 10K	3	
R611	ERJ6GEYJ682	M.RESISTOR CH1/10W 6.8K	1	
R612	ERJ6GEYJ273	M.RESISTOR CH1/10W 27K	1	
R613	ERJ6GEYJ103	M.RESISTOR CH1/10W 10K	1	
R617	ERJ6GEYJ103	M.RESISTOR CH1/10W 10K	1	
R618-25	ERJ6GEYJ101	M.RESISTOR CH1/10W 100	8	
R626	ERJ6GEYJ183	M.RESISTOR CH1/10W 18K	1	
R627	ERJ6GEYF333	M.RESISTOR CH1/10W 33K	1	
R628,29	ERJ6GEYJ103	M.RESISTOR CH1/10W 10K	2	
R630	ERJ6GEYJ272	M.RESISTOR CH1/10W 2.7K	1	
R631	ERJ6GEYJ562	M.RESISTOR CH1/10W 5.6K	1	
R632	ERJ6GEYJ222	M.RESISTOR CH1/10W 2.2K	1	
R633,34	ERJ6GEYJ101	M.RESISTOR CH1/10W 100	2	
R635	ERJ6GEYJ681	M.RESISTOR CH1/10W 680	1	
R636	ERJ6GEY0R00	M.RESISTOR CH 1/10W 0	1	
R637	ERJ6GEYJ222	M.RESISTOR CH1/10W 2.2K	1	
R638	ERJ6GEYJ101	M.RESISTOR CH1/10W 100	1	
R639,40	ERJ6GEYF472	M.RESISTOR CH1/10W 4.7K	2	
R641	ERJ6GEYJ562	M.RESISTOR CH1/10W 5.6K	1	
R701	ERJ6GEYJ123	M.RESISTOR CH1/10W 12K	1	
R704	ERJ6GEY0R00	M.RESISTOR CH 1/10W 0	1	
R706	ERJ6GEY0R00	M.RESISTOR CH 1/10W 0	1	
R708	ERJ6GEY0R00	M.RESISTOR CH 1/10W 0	1	
R711	ERJ6GEYJ102	M.RESISTOR CH1/10W 1K	1	
R712	ERJ6GEYJ104	M.RESISTOR CH1/10W 100K	1	
R713	ERJ6GEYG153	M.RESISTOR CH1/10W 15K	1	
R714	ERJ6GEYJ103	M.RESISTOR CH1/10W 10K	1	
R715	ERJ6GEYJ102	M.RESISTOR CH1/10W 1K	1	
R716	ERJ6GEYJ562	M.RESISTOR CH1/10W 5.6K	1	
R717	ERJ6GEYJ103	M.RESISTOR CH1/10W 10K	1	
R718	VRE0034E821	M.RESISTOR CH 1/10W 820	1	
R719	VRE0034E392	M.RESISTOR CH 1/10W 3.9K	1	
R720	VRE0034E103	M.RESISTOR CH 1/10W 10K	1	
R721	ERJ6GEYJ104	M.RESISTOR CH1/10W 100K	1	
R722	ERJ6GEYG153	M.RESISTOR CH1/10W 15K	1	
R723	ERJ6GEYJ103	M.RESISTOR CH1/10W 10K	1	
R724,25	ERJ6GEYJ105	M.RESISTOR CH1/10W 1M	2	
R726	ERJ6GEYJ563	M.RESISTOR CH1/10W 56K	1	
R727,28	ERJ6GEYJ562	M.RESISTOR CH1/10W 5.6K	2	
R729	ERJ6GEYJ102	M.RESISTOR CH1/10W 1K	1	
R730	ERJ6GEYJ223	M.RESISTOR CH1/10W 22K	1	
R731,32	ERJ6GEYJ824	M.RESISTOR CH1/10W 820K	2	
R733	ERJ6GEYJ103	M.RESISTOR CH1/10W 10K	1	
R734	VRE0034E202	M.RESISTOR CH 1/10W 2K	1	
R735	VRE0034E162	M.RESISTOR CH 1/10W 1.6K	1	

M1 SUB 2 VEP82103A

Ref.No.	Part No.	Part Name & Description	Pcs	Remarks
R736	ERJ6GEYJ822	M.RESISTOR CH1/10W 8.2K	1	
R737	VRE0034E202	M.RESISTOR CH 1/10W 2K	1	
R738	ERJ6GEYJ222	M.RESISTOR CH1/10W 2.2K	1	
R739	ERJ6GEYJ152	M.RESISTOR CH1/10W 1.5K	1	
R740	ERJ6GEYJ102	M.RESISTOR CH1/10W 1K	1	
R741	ERJ6GEYJ391	M.RESISTOR CH1/10W 390	1	
SW501	VSS0184	SWITCH	1	
SW701	VJP1940	CONNECTOR (MALE)	1	
SWS701	VJS1940	CONNECTOR (FEMALE)	1	
TH1	ERTD2FHL103S	THERMISTOR 10K	1	
TH2	ERTD2FGL601S	THERMISTOR 600	1	
TH601	ERTD2FFL102S	THERMISTOR 1K	1	
TP1	VJR0646	TEST POINT	1	
TP101	VJR0646	TEST POINT	1	
TP103	VJR0646	TEST POINT	1	
TP201-03	VJR0646	TEST POINT	3	
TP401-04	VJR0646	TEST POINT	4	
TP601	VJR0646	TEST POINT	1	
TP701-10	VJR0646	TEST POINT	10	
TPG1,G2	VJR0646	TEST POINT	2	
TPG5,G6	VJR0646	TEST POINT	2	
VR101	VRV0109B501	V.RESISTOR 500	1	
VR102	VRV0109B102	V.RESISTOR 1K	1	
VR103	VRV0109B101	V.RESISTOR 100	1	
VR201	VRV0109B202	V.RESISTOR 2K	1	
VR202	VRV0109B201	V.RESISTOR 200	1	
VR401	VRV0109B503	V.RESISTOR 50K	1	
VR601,02	VRV0109B103	V.RESISTOR 10K	2	
VR701	VRV0109B103	V.RESISTOR 10K	1	
VR702	VRV0109B502	V.RESISTOR 5K	1	
VR703,04	VRV0109B103	V.RESISTOR 10K	2	
VR705,06	VRV0109B202	V.RESISTOR 2K	2	
X401	VSX0567A	CRYSTAL OSCILLATOR	1	
X402	VSX0270	CRYSTAL OSCILLATOR	1	
		MISCELLANEOUS		
	VGQ0291	P.C.BOARD NAME PLATE	1	
	VML2143	CARD PULLER	1	
	VML2144	6CARD PULLER	1	
	VSC3335	SHIELD CASE	1	
	VXA4420	P.C.BOARD SHIELD PLATE	1	
	XNG26E	NUT	4	
	XTV3+6FFR	SCFREW	5	
	XYN26+C12	SCREW	4	
	VEP82068A	P.C.BOARD W/COMPONENT M1 DRIVE		
	VEP82086A	P.C.BOARD W/COMPONENT M1 SUB 1		FOR VEP82068A
	VEP82103A	P.C.BOARD W/COMPONENT M1 SUB 2		FOR VEP82068A

Ref.No.	Part No.	Part Name & Description	Pcs	Remarks
		CAPACITORS		
C337,38	ECQB1H104JF	P.CAPACITOR 50V 0.1U	2	
C2301-03	ECA1CXLV470	E.CAPACITOR 16V 47U	3	
C2304	ECA1HXLV101X	E.CAPACITOR 50V 100U	1	
C2304	ECA1HXLV101X	E.CAPACITOR 50V 100U	1	
C2305,06	ECEA1HGE471	E.CAPACITOR 50V 470U	2	
C2307	ECA1HXLV101X	E.CAPACITOR 50V 100U	1	
C2308,09	ECEA1HGE471	E.CAPACITOR 50V 470U	2	
C2313	ECUM1H561JN	C.CAPACITOR CH 50V 560P	1	
C2314	ECQB1H103JF	P.CAPACITOR 50V 0.01U	1	
C2315	ECA1CXLV470	E.CAPACITOR 16V 47U	1	
C2316	ECUM1H102JCN	C.CAPACITOR CH 50V 1000P	1	
C2320	ECA1HXLV470X	E.CAPACITOR 50V 47U	1	
C2321	ECEA1HGE471	E.CAPACITOR 50V 470U	1	
C2323-25	ECUM1H103KBN	C.CAPACITOR CH 50V 0.01U	3	
C2328	ECUM1H104ZFN	C.CAPACITOR CH 50V 0.1U	1	
C2330	ECUM1H102JCN	C.CAPACITOR CH 50V 1000P	1	
C2332	ECUM1H104ZFN	C.CAPACITOR CH 50V 0.1U	1	
C2333-35	ECUM1H102JCN	C.CAPACITOR CH 50V 1000P	3	
C2336	ECA1HXLV4R7	E.CAPACITOR 50V 4.7U	1	
C2339	ECA1HXSR47	E.CAPACITOR 50V 0.47U	1	
C2340	ECA1CXLV470	E.CAPACITOR 16V 47U	1	
C2341-43	ECA1HXNV4R7	E.CAPACITOR 50V 4.7U	3	
C2344-46	ECUM1H103KBN	C.CAPACITOR CH 50V 0.01U	3	
C2348-55	ECUM1H104ZFN	C.CAPACITOR CH 50V 0.1U	8	
C2360	ECA1CXLV470	E.CAPACITOR 16V 47U	1	
C2361,62	ECUM1H104ZFN	C.CAPACITOR CH 50V 0.1U	2	
C2364	ECUM1H123KBN	C.CAPACITOR CH 50V 0.012U	1	
C2365	ECA1HXLV220	E.CAPACITOR 50V 22U	1	
C2368	ECUM1H102KBN	C.CAPACITOR CH 50V 1000P	1	
C2369-77	ECUM1H104ZFN	C.CAPACITOR CH 50V 0.1U	9	
C2378	ECA1HXLV100	E.CAPACITOR 50V 10U	1	
C2380	ECUM1H123KBN	C.CAPACITOR CH 50V 0.012U	1	
C2381	ECA1HXLV100	E.CAPACITOR 50V 10U	1	
C2382-90	ECUM1H104ZFN	C.CAPACITOR CH 50V 0.1U	9	
C2391	ECUM1H102KBN	C.CAPACITOR CH 50V 1000P	1	
C2394	ECA1HXLV220	E.CAPACITOR 50V 22U	1	
C2395-98	ECUM1H104ZFN	C.CAPACITOR CH 50V 0.1U	4	
C2401	ECUM1H103KBN	C.CAPACITOR CH 50V 0.01U	1	
C2402	ECUM1H102JCN	C.CAPACITOR CH 50V 1000P	1	
C2405	ECUM1H103ZFN	C.CAPACITOR CH 50V 0.01U	1	
C2411-16	ECA1HXLV4R7	E.CAPACITOR 50V 4.7U	6	
C2421-23	ECUM1H473ZFN	C.CAPACITOR CH 50V 0.047U	3	
C2440,41	ECKF1H122KB	C.CAPACITOR 50V 1200P	2	
C2501	ECA1EXS330	E.CAPACITOR 25V 33U	1	
C2502	ECUM1H104ZFN	C.CAPACITOR CH 50V 0.1U	1	
C2503-06	ECA1HXNV2R2	E.CAPACITOR 50V 2.2U	4	
C2507-11	ECA1HXNVR22	E.CAPACITOR 50V 0.22U	5	
C2512	ECA1EXS330	E.CAPACITOR 25V 33U	1	
C2513-21	ECUM1H103ZFN	C.CAPACITOR CH 50V 0.01U	9	
C2523,24	ECKF1H562KB	C.CAPACITOR 50V 5600P	2	
D2301	31DQ06	DIODE	1	
D2302	21DQ04	DIODE	1	
D2303,04	31DQ06	DIODE	2	
D2308,09	MA3150-M	DIODE	2	
D2310	MA151WK	DIODE	1	
D2311	MA151K	DIODE	1	
D2312	MA153	DIODE	1	
D2313	MA3110-M	DIODE	1	
D2314	MA3150-M	DIODE	1	
D2315	MA153	DIODE	1	
D2320-31	10E1	DIODE	12	
D2361	0A95	DIODE	1	
D2501	MA4120-M	DIODE	1	
D2502	MA4056-M	DIODE	1	
D2503	MA4043M	DIODE	1	
D2504	MA4100M	DIODE	1	
D2505	MA4082M	DIODE	1	
D2506	MA4100M	DIODE	1	
D2507	MA4039-M	DIODE	1	

Ref.No.	Part No.	Part Name & Description	Pcs	Remarks
IC1	NJM2904M	IC	1	
IC2301	NJM2902M	IC	1	
IC2302	TA7712F	IC	1	
IC2304	NJM2903M	IC	1	
IC2305,06	TL1451CNS	IC	2	
IC2307	AN3821K	IC	1	
IC2308	UPA1453H	IC	1	
IC2309	MP6901	IC	1	
IC2310	MC14053BF	IC	1	
IC2311,12	TA7712F	IC	2	
IC2315	TL084CNS	IC	1	
IC2316	UPC393G2	IC	1	
IC2317	MC14053BF	IC	1	
IC2318	TL082CPS	IC	1	
IC2501,02	BA6238AU2M	IC	2	
IC2503-05	PU4124	POWER TRANSISTOR	3	
IC2506-08	MC14538BF	IC	3	
IC2509,10	MC14081BF	IC	2	
IC2511,12	MC14050BF	IC	2	
IC2513	MC14073BF	IC	1	
IC2514	MC14049UBF	IC	1	
L2301-03	VLQ0128	COIL	3	
L2304,05	VLQ0214	COIL	2	
L2306	VLQ0497	COIL	1	
L2307	VLQ0504561K	COIL 560UH	1	
L2308,09	VLQ0497	COIL	2	
L2315	VLQ0128	COIL	1	
L2501	VLP0017	COIL	1	
L2502	VLQ0214	COIL	1	
P2101	VJP3097B040	CONNECTOR (MALE)	1	
P2102	VJP3098B034	CONNECTOR (MALE)	1	
P2103	VJP3098B032	CONNECTOR (MALE)	1	
P2104	VJP1154	CONNECTOR (MALE)	1	
Q2301-04	2SB644	TRANSISTOR	4	
Q2305	UN2213	TRANSISTOR	1	
Q2307	2SD637-Q	TRANSISTOR	1	
Q2308	2SB942A-Q	TRANSISTOR	1	
Q2309	2SB642	TRANSISTOR	1	
Q2310-12	2SC829	TRANSISTOR	3	
Q2313	2SB944-Q	TRANSISTOR	1	
Q2316	2SB709-R	TRANSISTOR	1	
Q2320	2SC1685	TRANSISTOR	1	
Q2321	2SB942A-Q	TRANSISTOR	1	
Q2322	2SB642	TRANSISTOR	1	
Q2323	UN2210	TRANSISTOR	1	
Q2324-26	2SC829	TRANSISTOR	3	
Q2327	2SC1685	TRANSISTOR	1	
Q2328-30	2SC829	TRANSISTOR	3	
Q2331	2SB942A-Q	TRANSISTOR	1	
Q2332	2SB642	TRANSISTOR	1	
Q2340-42	2SB951A-Q	TRANSISTOR	3	
Q2343-45	2SD1277A-Q	TRANSISTOR	3	
Q2346-48	2SB951A-Q	TRANSISTOR	3	
Q2349-51	2SD1277A-Q	TRANSISTOR	3	
Q2361-63	2SA1022-B	TRANSISTOR	3	
Q2501-07	UN2213	TRANSISTOR	7	
		RESISTORS		
R418	VRE0034E103	M.RESISTOR CH 1/10W 10K	1	
R484	VRE0034E152	M.RESISTOR CH 1/10W 1.5K	1	
R485	VRE0034E102	M.RESISTOR CH 1/10W 1K	1	
R486	VRE0034E152	M.RESISTOR CH 1/10W 1.5K	1	
R487	VRE006605102	M.RESISTOR CH 1/10W 1K	1	

REC AMP

REC AMP VEP85023C

REC AMP SUB 1 VEP85046A

Ref.No.	Part No.	Part Name & Description	Pcs	Remarks
R2301-04	ERDS2TJ222	C.RESISTOR 1/4W 2.2K	4	
R2305-08	ERDS2TJ152	C.RESISTOR 1/4W 1.5K	4	
R2309-12	ERDS2TJ390	C.RESISTOR 1/4W 39	4	
R2314	ERJ6GEYJ103	M.RESISTOR CH1/10W 10K	1	
R2315	ERJ6GEYF472	M.RESISTOR CH1/10W 4.7K	1	
R2316,17	ERJ6GEYJ103	M.RESISTOR CH1/10W 10K	2	
R2318	ERJ6GEYJ105	M.RESISTOR CH1/10W 1M	1	
R2319	ERJ6GEYF333	M.RESISTOR CH1/10W 33K	1	
R2320	ERJ6GEYJ103	M.RESISTOR CH1/10W 10K	1	
R2321	ERJ6GEYF333	M.RESISTOR CH1/10W 33K	1	
R2322	ERJ6GEYJ332	M.RESISTOR CH1/10W 3.3K	1	
R2323	ERJ6GEYJ103	M.RESISTOR CH1/10W 10K	1	
R2324	ERJ6GEYJ272	M.RESISTOR CH1/10W 2.7K	1	
R2325,26	ERJ6GEYJ103	M.RESISTOR CH1/10W 10K	2	
R2327	ERG1SJ821	M.RESISTOR 1W 820	1	
R2328	ERJ6GEYJ223	M.RESISTOR CH1/10W 22K	1	
R2329	ERJ6GEYJ103	M.RESISTOR CH1/10W 10K	1	
R2330	ERJ6GEYJ104	M.RESISTOR CH1/10W 100K	1	
R2331-34	ERJ6GEYJ103	M.RESISTOR CH1/10W 10K	4	
R2335-40	ERJ6GEYJ122	M.RESISTOR CH1/10W 1.2K	6	
R2341	ERX3SG1R0	M.RESISTOR 3W 1.0	1	
R2342-45	ERJ6GEYJ123	M.RESISTOR CH1/10W 12K	4	
R2346	ERJ6GEYJ563	M.RESISTOR CH1/10W 56K	1	
R2347	ERJ6GEYG153	M.RESISTOR CH1/10W 15K	1	
R2348	ERJ6GEYJ563	M.RESISTOR CH1/10W 56K	1	
R2349-52	ERJ6GEYJ123	M.RESISTOR CH1/10W 12K	4	
R2353	ERJ6GEYJ563	M.RESISTOR CH1/10W 56K	1	
R2354	ERJ6GEYG153	M.RESISTOR CH1/10W 15K	1	
R2355	ERJ6GEYJ563	M.RESISTOR CH1/10W 56K	1	
R2356	ERJ6GEYJ562	M.RESISTOR CH1/10W 5.6K	1	
R2367	ERJ6GEYJ103	M.RESISTOR CH1/10W 10K	1	
R2368	ERJ6GEYJ104	M.RESISTOR CH1/10W 100K	1	
R2369	ERJ6GEYJ272	M.RESISTOR CH1/10W 2.7K	1	
R2370	ERJ6GEYJ103	M.RESISTOR CH1/10W 10K	1	
R2371	ERJ6GEYJ392	M.RESISTOR CH1/10W 3.9K	1	
R2372	ERJ6GEYJ223	M.RESISTOR CH1/10W 22K	1	
R2373-75	ERJ6GEYJ224	M.RESISTOR CH1/10W 220K	3	
R2376	ERX12SJR68	M.RESISTOR 1/2W 0.68	1	
R2377	ERJ6GEYJ272	M.RESISTOR CH1/10W 2.7K	1	
R2378	ERJ6GEYJ103	M.RESISTOR CH1/10W 10K	1	
R2379	ERJ6GEYG153	M.RESISTOR CH1/10W 15K	1	
R2380,81	VRE0034E103	M.RESISTOR CH 1/10W 10K	2	
R2382	ERJ6GEYF472	M.RESISTOR CH1/10W 4.7K	1	
R2383,84	ERJ6GEYJ103	M.RESISTOR CH1/10W 10K	2	
R2385	ERJ6GEYJ105	M.RESISTOR CH1/10W 1M	1	
R2386	ERJ6GEYJ562	M.RESISTOR CH1/10W 5.6K	1	
R2387,88	VRE0034E103	M.RESISTOR CH 1/10W 10K	2	
R2389	ERJ6GEYJ332	M.RESISTOR CH1/10W 3.3K	1	
R2390	VRE0034E103	M.RESISTOR CH 1/10W 10K	1	
R2391	ERJ6GEYJ473	M.RESISTOR CH1/10W 47K	1	
R2392	VRE0034E103	M.RESISTOR CH 1/10W 10K	1	
R2393	ERJ6GEYJ562	M.RESISTOR CH1/10W 5.6K	1	
R2394	ERJ6GEYJ563	M.RESISTOR CH1/10W 56K	1	
R2395	ERJ6GEYJ103	M.RESISTOR CH1/10W 10K	1	
R2396	ERDS2TJ3R3	C.RESISTOR 1/4W 3.3	1	
R2397	ERG1SJ391	M.RESISTOR 1W 390	1	
R2398	ERJ6GEYJ223	M.RESISTOR CH1/10W 22K	1	
R2399	ERJ6GEYJ103	M.RESISTOR CH1/10W 10K	1	
R2400	ERJ6GEYJ104	M.RESISTOR CH1/10W 100K	1	
R2401	ERJ6GEYJ103	M.RESISTOR CH1/10W 10K	1	
R2402-07	ERJ6GEYJ122	M.RESISTOR CH1/10W 1.2K	6	
R2408	ERX3SG1R0	M.RESISTOR 3W 1.0	1	
R2409	ERJ6GEYJ104	M.RESISTOR CH1/10W 100K	1	
R2410	VRE0034E103	M.RESISTOR CH 1/10W 10K	1	
R2411	ERJ6GEYF472	M.RESISTOR CH1/10W 4.7K	1	
R2412	VRE0034E103	M.RESISTOR CH 1/10W 10K	1	
R2413,14	ERJ6GEYJ103	M.RESISTOR CH1/10W 10K	2	
R2415	ERJ6GEYJ105	M.RESISTOR CH1/10W 1M	1	
R2416	ERJ6GEYJ562	M.RESISTOR CH1/10W 5.6K	1	
R2417	VRE0034E103	M.RESISTOR CH 1/10W 10K	1	
R2419	ERJ6GEYJ332	M.RESISTOR CH1/10W 3.3K	1	
R2420,21	VRE0034E103	M.RESISTOR CH 1/10W 10K	2	
R2422	ERJ6GEYJ562	M.RESISTOR CH1/10W 5.6K	1	
R2423	ERJ6GEYJ563	M.RESISTOR CH1/10W 56K	1	
R2424	ERJ6GEYJ103	M.RESISTOR CH1/10W 10K	1	

REC AMP SUB 2 VEP85047B

Ref.No.	Part No.	Part Name & Description	Pcs	Remarks
R2425	ERG1SJ561	M.RESISTOR 1W 560	1	
R2426	ERJ6GEYJ223	M.RESISTOR CH1/10W 22K	1	
R2427	ERJ6GEYJ103	M.RESISTOR CH1/10W 10K	1	
R2428	ERJ6GEYJ104	M.RESISTOR CH1/10W 100K	1	
R2429	ERJ6GEYJ103	M.RESISTOR CH1/10W 10K	1	
R2430	ERDS2TJ3R3	C.RESISTOR 1/4W 3.3	1	
R2431-36	ERJ6GEYJ122	M.RESISTOR CH1/10W 1.2K	6	
R2437	ERJ6GEYJ104	M.RESISTOR CH1/10W 100K	1	
R2438	ERX3SG1R0	M.RESISTOR 3W 1.0	1	
R2439-42	ERJ6GEYJ331	M.RESISTOR CH1/10W 330	4	
R2451-56	ERJ6GEYJ223	M.RESISTOR CH1/10W 22K	6	
R2457	ERJ6GEYF472	M.RESISTOR CH1/10W 4.7K	1	
R2458-63	ERJ6GEYJ223	M.RESISTOR CH1/10W 22K	6	
R2464	ERJ6GEYF472	M.RESISTOR CH1/10W 4.7K	1	
R2465-76	ERJ6GEYJ102	M.RESISTOR CH1/10W 1K	12	
R2477	ERJ6GEYJ100	M.RESISTOR CH1/10W 10	1	
R2481-83	ERJ6GEYG153	M.RESISTOR CH1/10W 15K	3	
R2501,02	ERDS2TJ102	C.RESISTOR 1/4W 1K	2	
R2503-10	ERJ6GEYJ104	M.RESISTOR CH1/10W 100K	8	
R2511-15	ERJ6GEYJ105	M.RESISTOR CH1/10W 1M	5	
R2516-25	ERJ6GEYJ681	M.RESISTOR CH1/10W 680	10	
R2526	ERJ6GEYJ104	M.RESISTOR CH1/10W 100K	1	
R2527	ERJ6GEYJ105	M.RESISTOR CH1/10W 1M	1	
R2528-31	ERJ6GEYJ104	M.RESISTOR CH1/10W 100K	4	
R2532-37	ERJ6GEYJ103	M.RESISTOR CH1/10W 10K	6	
R2538,39	ERJ6GEYJ123	M.RESISTOR CH1/10W 12K	2	
R2550	ERX1SJ2R2	M.RESISTOR 1W 2.2	1	
TP2305	VJR0646	TEST POINT	1	
TP2316	VJR0646	TEST POINT	1	
TP2324-37	VJR0646	TEST POINT	14	
TP2339-42	VJR0646	TEST POINT	4	
TPG1,G2	VJR0646	TEST POINT	2	
		MISCELLANEOUS		
	VJF0300	BINDER	3	
	VMB2318	SPRING	1	
	VMP3034	P.C.BOARD HOLDER ANGLE	1	
	VMP3087	P.C.BOARD HOLDER ANGLE	1	
	VSC3326	SHIELD CASE	2	
	VSC3367	SHIELD CASE	1	
	VXA4419	P.C.BOARD SHIELD PLATE	1	
	XNG3CS	NUT	12	
	XTV3+6FFR	SCREW	5	
	XYNV3+K8S	SCREW	3	
	XYN3+C8S	SCREW	2	
	XYN3+F10S	SCREW	16	
	VJR0421	PIN	6	
	VJR0133	PIN	4	
	VEP85023C	P.C.BOARD W/COMPONENT		
		REC AMP		
	VEP85046A	P.C.BOARD W/COMPONENT		FOR VEP85023C
		REC AMP SUB 1		
	VEP85047B	P.C.BOARD W/COMPONENT		FOR VEP85023C
		REC AMP SUB 2		
		CAPACITORS		
C1-C9	ECUM1E104ZFN	E.CAPACITOR 25V 0.1U	9	
C10-15	ECUM1E104ZFN	E.CAPACITOR 25V 0.1U	6	
C18-21	ECA1HXLV100	E.CAPACITOR 50V 10U	4	
C22-25	ECUM1E104ZFN	E.CAPACITOR 25V 0.1U	4	
C26,27	ECUM1H470JCN	C.CAPACITOR CH 50V 47P	2	
C28-31	ECUM1E104ZFN	E.CAPACITOR 25V 0.1U	4	
C32	ECUM1H102KBN	C.CAPACITOR CH 50V 1000P	1	

Ref.No.	Part No.	Part Name & Description	Pcs	Remarks
C33	ECUM1H101JCN	C.CAPACITOR CH 50V 100P	1	
C34-39	ECUM1E104ZFN	E.CAPACITOR 25V 0.1U	6	
C40	ECUM1H102KBN	C.CAPACITOR CH 50V 1000P	1	
C41-46	ECUM1E104ZFN	E.CAPACITOR 25V 0.1U	6	
C48-53	ECUM1E104ZFN	E.CAPACITOR 25V 0.1U	6	
C55	ECUM1E104ZFN	E.CAPACITOR 25V 0.1U	1	
C58,59	ECA1HXLV100	E.CAPACITOR 50V 10U	2	
C62-65	ECUM1E104ZFN	E.CAPACITOR 25V 0.1U	4	
C66,67	ECUM1H470JCN	C.CAPACITOR CH 50V 47P	2	
C68,69	ECUM1E104ZFN	E.CAPACITOR 25V 0.1U	2	
C72	ECUM1H102KBN	C.CAPACITOR CH 50V 1000P	1	
C73	ECUM1H101JCN	C.CAPACITOR CH 50V 100P	1	
C74-77	ECUM1E104ZFN	E.CAPACITOR 25V 0.1U	4	
C80	ECUM1H102KBN	C.CAPACITOR CH 50V 1000P	1	
C83	ECA1HXLV100	E.CAPACITOR 50V 10U	1	
C85-88	ECUM1E104ZFN	E.CAPACITOR 25V 0.1U	4	
C89-92	ECUM1H470JCN	C.CAPACITOR CH 50V 47P	4	
C93-99	ECUM1H101JCN	C.CAPACITOR CH 50V 100P	7	
C100	ECUM1H101JCN	C.CAPACITOR CH 50V 100P	1	
C101	ECA1CXLV101	E.CAPACITOR 16V 100U	1	
C102	ECA1HXLV330	E.CAPACITOR 50V 33U	1	
C103,04	ECUM1H332KBN	C.CAPACITOR CH 50V 3300P	2	
C105,06	ECUM1H103ZFN	C.CAPACITOR CH 50V 0.01U	2	
C200-03	ECUM1E104ZFN	E.CAPACITOR 25V 0.1U	4	
C204	ECUM1H050DCN	C.CAPACITOR CH 50V 5P	1	
C205-07	ECUM1E104ZFN	E.CAPACITOR 25V 0.1U	3	
C208	ECUM1H050DCN	C.CAPACITOR CH 50V 5P	1	
C209-14	ECUM1E104ZFN	E.CAPACITOR 25V 0.1U	6	
C215,16	ECUM1H221JCN	C.CAPACITOR CH 50V 220P	2	
C221	ECUM1E104ZFN	E.CAPACITOR 25V 0.1U	1	
C222	ECA1HXLV100	E.CAPACITOR 50V 10U	1	
C223,24	ECUM1E104ZFN	E.CAPACITOR 25V 0.1U	2	
C225	ECA1HXLV100	E.CAPACITOR 50V 10U	1	
C226,27	ECUM1E104ZFN	E.CAPACITOR 25V 0.1U	2	
C228	ECUM1H682KBN	C.CAPACITOR CH 50V 6800P	1	
C229	ECUM1E104ZFN	E.CAPACITOR 25V 0.1U	1	
C231	ECUM1E104ZFN	E.CAPACITOR 25V 0.1U	1	
C232	ECUM1H102KBN	C.CAPACITOR CH 50V 1000P	1	
C234-36	ECUM1E104ZFN	E.CAPACITOR 25V 0.1U	3	
C237	ECUM1H220JCN	C.CAPACITOR CH 50V 22P	1	
C238,39	ECUM1E104ZFN	E.CAPACITOR 25V 0.1U	2	
C240	ECUM1H220JCN	C.CAPACITOR CH 50V 22P	1	
C241,42	ECUM1E104ZFN	E.CAPACITOR 25V 0.1U	2	
C400	ECUM1H151JCN	C.CAPACITOR CH 50V 150P	1	
C401	ECUM1H330JCN	C.CAPACITOR CH 50V 33P	1	
C402	ECUM1H151JCN	C.CAPACITOR CH 50V 150P	1	
C403	ECUM1H330JCN	C.CAPACITOR CH 50V 33P	1	
C500-03	ECUM1E104ZFN	E.CAPACITOR 25V 0.1U	4	
D1-D6	MA151K	DIODE	6	
D7	MA153	DIODE	1	
D200	MA151K	DIODE	1	
D202,03	MA3024	DIODE	2	
D204	MA151K	DIODE	1	
HS1-S8	VSC3391	SHIELD CASE	8	
IC3-C6	UPC1663G	IC	4	
IC7	MC14053BF	IC	1	
IC8	NJM082BM	IC	1	
IC9	NJM1496M	IC	1	
IC10	NJM1496M	IC	1	
IC11	NJM082BM	IC	1	
IC13	TC4S584F	IC	1	
IC14	TC4S71F	IC	1	
IC15	TC4S584F	IC	1	
IC16	TC4S71F	IC	1	
IC17	TC4S584F	IC	1	
IC18,19	TC4S71F	IC	2	

Ref.No.	Part No.	Part Name & Description	Pcs	Remarks
IC20,21	TC4S66F	IC	2	
IC200	MC10H116L	IC	1	
IC201	MC10H102L	IC	1	
IC202	MC10H176L	IC	1	
IC203-05	MC10H116L	IC	3	
IC206	MC74HC86F	IC	1	
IC207	MC14528BF	IC	1	
IC208	MC14015BF	IC	1	
IC210,11	MC74HC86F	IC	2	
IC213	MC74HC08AF	IC	1	
IC214	TC7S02F	IC	1	
IC215,16	TC4S69F	IC	2	
IC300	MC10H116L	IC	1	
IC301	MC10H101L	IC	1	
J104,05	VWJ0023	RESISTOR	2	
L1,L2	ELEA100JA	COIL	2	
L202,03	VLQEL06F100J	COIL 10UH	2	
LY1-Y4	VSY2069	RELAY	4	
LY200,01	VSY2069	RELAY	2	
P501	VJP1234T	CONNECTOR (MALE)	1	
P502	VJP3079	CONNECTOR (MALE)	1	
P503	VJP1230T	CONNECTOR (MALE)	1	
P504	VJP1233G	CONNECTOR (MALE)	1	
P505,06	VJP1231T	CONNECTOR (MALE)	2	
P507	VJP1230T	CONNECTOR (MALE)	1	
P508	VJP1233T	CONNECTOR (MALE)	1	
P509,10	VJP1230T	CONNECTOR (MALE)	2	
P511	VJP1233R	CONNECTOR (MALE)	1	
P520,21	VJP2509	CONNECTOR (MALE)	2	
Q1-Q8	2SC3356	TRANSISTOR	8	
Q9	2SC1253	TRANSISTOR	1	
Q10-20	2SC1253	TRANSISTOR	11	
Q21-24	2SA1022-B	TRANSISTOR	4	
Q25,26	2SC3110	TRANSISTOR	2	
Q27-30	2SD601-R	TRANSISTOR	4	
Q31-34	2SA1022-B	TRANSISTOR	4	
Q35,36	2SC2845	TRANSISTOR	2	
Q37	2SB709-R	TRANSISTOR	1	
Q38	2SD601-R	TRANSISTOR	1	
Q200,01	2SA1022-B	TRANSISTOR	2	
Q202,03	2SD601-R	TRANSISTOR	2	
Q204	2SA1022-B	TRANSISTOR	1	
Q205	2SD601-R	TRANSISTOR	1	
Q206	2SA1022-B	TRANSISTOR	1	
Q207	2SD601-R	TRANSISTOR	1	
Q500	2SA1022-B	TRANSISTOR	1	
		RESISTORS		
R1,R2	ERJ6GEYJ103	M.RESISTOR CH1/10W 10K	2	
R3,R4	ERJ6GEYJ101	M.RESISTOR CH1/10W 100	2	
R5-R9	ERJ6GEYJ471	M.RESISTOR CH1/10W 470	5	
R10-12	ERJ6GEYJ471	M.RESISTOR CH1/10W 470	3	
R13,14	ERJ6GEYJ102	M.RESISTOR CH1/10W 1K	2	
R15,16	ERJ6GEYJ123	M.RESISTOR CH1/10W 12K	2	
R17-20	ERJ6GEYJ330	M.RESISTOR CH1/10W 33	4	
R21-24	ERJ6GEYJ470	M.RESISTOR CH1/10W 47	4	
R25-28	ERJ6GEYJ102	M.RESISTOR CH1/10W 1K	4	
R29,30	ERG2SG470	M.RESISTOR 2W 47	2	

Ref.No.	Part No.	Part Name & Description	Pcs	Remarks
R31,32	ERG2SJ680	M.RESISTOR 2W 68	2	
R33,34	ERJ6GEYJ104	M.RESISTOR CH1/10W 100K	2	
R35,36	ERJ6GEYJ222	M.RESISTOR CH1/10W 2.2K	2	
R37,38	ERJ6GEYF472	M.RESISTOR CH1/10W 4.7K	2	
R39,40	ERJ6GEYJ103	M.RESISTOR CH1/10W 10K	2	
R41,42	ERJ6GEYJ822	M.RESISTOR CH1/10W 8.2K	2	
R43	ERJ6GEYJ682	M.RESISTOR CH1/10W 6.8K	1	
R44,45	ERJ6GEYJ103	M.RESISTOR CH1/10W 10K	2	
R47-54	ERJ6GEYJ102	M.RESISTOR CH1/10W 1K	8	
R55-58	ERJ6GEYJ101	M.RESISTOR CH1/10W 100	4	
R59,60	ERJ8GCYJ100	M.RESISTOR CH 1/8W 10	2	
R61	ERJ6GEYJ561	M.RESISTOR CH1/10W 560	1	
R62,63	ERJ6GEYJ102	M.RESISTOR CH1/10W 1K	2	
R64	ERJ6GEYJ103	M.RESISTOR CH1/10W 10K	1	
R66	ERJ6GEYJ101	M.RESISTOR CH1/10W 100	1	
R67	ERJ6GEYJ331	M.RESISTOR CH1/10W 330	1	
R68	ERJ6GEYJ821	M.RESISTOR CH1/10W 820	1	
R69	ERJ6GEYJ102	M.RESISTOR CH1/10W 1K	1	
R70	ERJ6GEYJ182	M.RESISTOR CH1/10W 1.8K	1	
R71	ERJ6GEYJ332	M.RESISTOR CH1/10W 3.3K	1	
R72	ERJ6GEYF472	M.RESISTOR CH1/10W 4.7K	1	
R73	ERJ6GEYJ392	M.RESISTOR CH1/10W 3.9K	1	
R74	ERJ6GEYG153	M.RESISTOR CH1/10W 15K	1	
R75	ERJ6GEYJ123	M.RESISTOR CH1/10W 12K	1	
R76,77	ERJ6GEYJ103	M.RESISTOR CH1/10W 10K	2	
R78,79	ERJ6GEYJ101	M.RESISTOR CH1/10W 100	2	
R80-87	ERJ6GEYJ471	M.RESISTOR CH1/10W 470	8	
R88,89	ERJ6GEYJ102	M.RESISTOR CH1/10W 1K	2	
R90,91	ERJ6GEYJ123	M.RESISTOR CH1/10W 12K	2	
R92-95	ERJ6GEYJ330	M.RESISTOR CH1/10W 33	4	
R96-99	ERJ6GEYJ470	M.RESISTOR CH1/10W 47	4	
R100-03	ERJ6GEYJ102	M.RESISTOR CH1/10W 1K	4	
R104,05	ERG2SG470	M.RESISTOR 2W 47	2	
R106,07	ERG2SJ680	M.RESISTOR 2W 68	2	
R108,09	ERJ6GEYJ104	M.RESISTOR CH1/10W 100K	2	
R110,11	ERJ6GEYJ222	M.RESISTOR CH1/10W 2.2K	2	
R112,13	ERJ6GEYF472	M.RESISTOR CH1/10W 4.7K	2	
R114,15	ERJ6GEYJ103	M.RESISTOR CH1/10W 10K	2	
R116,17	ERJ6GEYJ822	M.RESISTOR CH1/10W 8.2K	2	
R118	ERJ6GEYJ682	M.RESISTOR CH1/10W 6.8K	1	
R119,20	ERJ6GEYJ103	M.RESISTOR CH1/10W 10K	2	
R122-29	ERJ6GEYJ102	M.RESISTOR CH1/10W 1K	8	
R130-33	ERJ6GEYJ101	M.RESISTOR CH1/10W 100	4	
R134,35	ERJ8GCYJ100	M.RESISTOR CH 1/8W 10	2	
R136	ERJ6GEYJ561	M.RESISTOR CH1/10W 560	1	
R137,38	ERJ6GEYJ102	M.RESISTOR CH1/10W 1K	2	
R139	ERJ6GEYJ103	M.RESISTOR CH1/10W 10K	1	
R141	ERJ6GEYJ101	M.RESISTOR CH1/10W 100	1	
R142	ERJ6GEYJ331	M.RESISTOR CH1/10W 330	1	
R143	ERJ6GEYJ821	M.RESISTOR CH1/10W 820	1	
R144	ERJ6GEYJ102	M.RESISTOR CH1/10W 1K	1	
R145	ERJ6GEYJ182	M.RESISTOR CH1/10W 1.8K	1	
R146	ERJ6GEYJ332	M.RESISTOR CH1/10W 3.3K	1	
R147	ERJ6GEYF472	M.RESISTOR CH1/10W 4.7K	1	
R148	ERJ6GEYJ392	M.RESISTOR CH1/10W 3.9K	1	
R149	ERJ6GEYG153	M.RESISTOR CH1/10W 15K	1	
R150	ERJ6GEYJ123	M.RESISTOR CH1/10W 12K	1	
R151-54	ERJ6GEYJ183	M.RESISTOR CH1/10W 18K	4	
R156	ERJ6GEYJ101	M.RESISTOR CH1/10W 100	1	
R158	ERJ6GEYJ101	M.RESISTOR CH1/10W 100	1	
R159	ERJ6GEYJ223	M.RESISTOR CH1/10W 22K	1	
R160	ERJ6GEYJ681	M.RESISTOR CH1/10W 680	1	
R161	ERJ6GEYJ103	M.RESISTOR CH1/10W 10K	1	
R162	ERJ6GEYJ470	M.RESISTOR CH1/10W 47	1	
R163	ERJ6GEYJ102	M.RESISTOR CH1/10W 1K	1	
R164	ERJ6GEYJ223	M.RESISTOR CH1/10W 22K	1	
R165	ERJ6GEYJ681	M.RESISTOR CH1/10W 680	1	
R166	ERJ6GEYJ103	M.RESISTOR CH1/10W 10K	1	
R167	ERJ6GEYJ470	M.RESISTOR CH1/10W 47	1	
R168	ERJ6GEYJ102	M.RESISTOR CH1/10W 1K	1	
R169,70	ERJ6GEYJ331	M.RESISTOR CH1/10W 330	2	
R171,72	ERJ6GEYJ560	M.RESISTOR CH1/10W 56	2	
R173,74	ERJ6GEYJ223	M.RESISTOR CH1/10W 22K	2	
R175	ERJ6GEYJ103	M.RESISTOR CH1/10W 10K	1	
R176	ERJ6GEYJ563	M.RESISTOR CH1/10W 56K	1	

Ref.No.	Part No.	Part Name & Description	Pcs	Remarks
R177-79	ERJ6GEYJ103	M.RESISTOR CH1/10W 10K	3	
R180	ERJ6GEYJ104	M.RESISTOR CH1/10W 100K	1	
R181,82	ERJ6GEYJ470	M.RESISTOR CH1/10W 47	2	
R200	ERJ6GEYJ101	M.RESISTOR CH1/10W 100	1	
R201	ERJ6GEYJ470	M.RESISTOR CH1/10W 47	1	
R202-05	ERJ6GEYJ471	M.RESISTOR CH1/10W 470	4	
R206	ERJ6GEYJ121	M.RESISTOR CH1/10W 120	1	
R207	ERJ6GEYJ471	M.RESISTOR CH1/10W 470	1	
R208	ERJ6GEYJ102	M.RESISTOR CH1/10W 1K	1	
R209	ERJ6GEYJ101	M.RESISTOR CH1/10W 100	1	
R210	ERJ6GEYJ102	M.RESISTOR CH1/10W 1K	1	
R211	ERJ6GEYJ101	M.RESISTOR CH1/10W 100	1	
R212	ERJ6GEYJ102	M.RESISTOR CH1/10W 1K	1	
R213	ERJ6GEYJ152	M.RESISTOR CH1/10W 1.5K	1	
R214	ERJ6GEYJ470	M.RESISTOR CH1/10W 47	1	
R215	ERJ6GEYJ101	M.RESISTOR CH1/10W 100	1	
R216	ERJ6GEYJ471	M.RESISTOR CH1/10W 470	1	
R217	ERJ6GEYJ470	M.RESISTOR CH1/10W 47	1	
R218	ERJ6GEYJ101	M.RESISTOR CH1/10W 100	1	
R219	ERJ6GEYJ471	M.RESISTOR CH1/10W 470	1	
R220	ERJ6GEYJ470	M.RESISTOR CH1/10W 47	1	
R221-23	ERJ6GEYJ471	M.RESISTOR CH1/10W 470	3	
R224	ERJ6GEYJ121	M.RESISTOR CH1/10W 120	1	
R225	ERJ6GEYJ471	M.RESISTOR CH1/10W 470	1	
R226	ERJ6GEYJ102	M.RESISTOR CH1/10W 1K	1	
R227,28	ERJ6GEYJ101	M.RESISTOR CH1/10W 100	2	
R229,30	ERJ6GEYJ102	M.RESISTOR CH1/10W 1K	2	
R231	ERJ6GEYJ152	M.RESISTOR CH1/10W 1.5K	1	
R232	ERJ6GEYJ470	M.RESISTOR CH1/10W 47	1	
R233,34	ERJ6GEYJ103	M.RESISTOR CH1/10W 10K	2	
R235	ERJ6GEYJ392	M.RESISTOR CH1/10W 3.9K	1	
R236,37	ERJ6GEYJ103	M.RESISTOR CH1/10W 10K	2	
R238	ERJ6GEYJ362	M.RESISTOR CH1/10W 3.6K	1	
R239	ERJ6GEYJ562	M.RESISTOR CH1/10W 5.6K	1	
R240,41	ERJ6GEYJ103	M.RESISTOR CH1/10W 10K	2	
R242	ERJ6GEYJ392	M.RESISTOR CH1/10W 3.9K	1	
R243,44	ERJ6GEYJ103	M.RESISTOR CH1/10W 10K	2	
R245	ERJ6GEYJ362	M.RESISTOR CH1/10W 3.6K	1	
R246	ERJ6GEYJ562	M.RESISTOR CH1/10W 5.6K	1	
R247	ERJ6GEYJ103	M.RESISTOR CH1/10W 10K	1	
R248	ERJ6GEYJ183	M.RESISTOR CH1/10W 18K	1	
R249	ERJ6GEYJ473	M.RESISTOR CH1/10W 47K	1	
R250	ERJ6GEYJ562	M.RESISTOR CH1/10W 5.6K	1	
R251	ERJ6GEYJ103	M.RESISTOR CH1/10W 10K	1	
R253	ERJ6GEYJ103	M.RESISTOR CH1/10W 10K	1	
R254	ERJ6GEYJ562	M.RESISTOR CH1/10W 5.6K	1	
R255	ERJ6GEYJ103	M.RESISTOR CH1/10W 10K	1	
R256	ERJ6GEYJ470	M.RESISTOR CH1/10W 47	1	
R258	ERJ6GEYJ103	M.RESISTOR CH1/10W 10K	1	
R259	ERJ6GEYJ182	M.RESISTOR CH1/10W 1.8K	1	
R260	ERJ6GEYJ331	M.RESISTOR CH1/10W 330	1	
R261	ERJ6GEYJ822	M.RESISTOR CH1/10W 8.2K	1	
R262	ERJ6GEYJ103	M.RESISTOR CH1/10W 10K	1	
R263	ERJ6GEYJ222	M.RESISTOR CH1/10W 2.2K	1	
R264	ERJ6GEYJ392	M.RESISTOR CH1/10W 3.9K	1	
R265	ERJ6GEYJ182	M.RESISTOR CH1/10W 1.8K	1	
R266	ERJ6GEYJ331	M.RESISTOR CH1/10W 330	1	
R267	ERJ6GEYJ822	M.RESISTOR CH1/10W 8.2K	1	
R268	ERJ6GEYJ103	M.RESISTOR CH1/10W 10K	1	
R269	ERJ6GEYJ222	M.RESISTOR CH1/10W 2.2K	1	
R270	ERJ6GEYJ392	M.RESISTOR CH1/10W 3.9K	1	
R271-78	ERJ6GEYJ471	M.RESISTOR CH1/10W 470	8	
R279-86	ERJ6GEYJ271	M.RESISTOR CH1/10W 270	8	
R287	ERJ6GEYJ183	M.RESISTOR CH1/10W 18K	1	
R288-90	ERJ6GEYJ103	M.RESISTOR CH1/10W 10K	3	
R500	ERJ6GEYJ471	M.RESISTOR CH1/10W 470	1	
R501	ERJ6GEYJ101	M.RESISTOR CH1/10W 100	1	
R502-05	ERJ6GEYJ821	M.RESISTOR CH1/10W 820	4	
R510	ERJ6GEYJ471	M.RESISTOR CH1/10W 470	1	
R511	ERJ6GEYJ101	M.RESISTOR CH1/10W 100	1	
R512-15	ERJ6GEYJ821	M.RESISTOR CH1/10W 820	4	
R520	ERJ6GEYF472	M.RESISTOR CH1/10W 4.7K	1	
R521-23	ERJ6GEYJ103	M.RESISTOR CH1/10W 10K	3	
R524	ERJ6GEYJ362	M.RESISTOR CH1/10W 3.6K	1	
R525	ERJ6GEYJ562	M.RESISTOR CH1/10W 5.6K	1	

HEAD AMP POWER (R) VEP85026A
H.A REGULATOR (S) VEP85027A

Ref.No.	Part No.	Part Name & Description	Pcs	Remarks
R700,01	ERJ6GEYJ221	M.RESISTOR CH1/10W 220	2	
SW200	VSS0228	SWITCH	1	
T1-T4	VET0141	TRANSFORMER	4	
TP1-P9	VJR0646	TEST POINT	9	
TP10-12	VJR0646	TEST POINT	3	
TP200-07	VJR0646	TEST POINT	8	
TPG0,G1	VJR0646	TEST POINT	2	
TPG200,01	VJR0646	TEST POINT	2	
VR2	VRV0109B102	V.RESISTOR 1K	1	
VR4	VRV0109B102	V.RESISTOR 1K	1	
VR5	VRV0109B502	V.RESISTOR 5K	1	
VR7	VRV0109B102	V.RESISTOR 1K	1	
VR9	VRV0109B102	V.RESISTOR 1K	1	
VR10	VRV0109B502	V.RESISTOR 5K	1	
VR11,12	VRV0109B501	V.RESISTOR 500	2	
VR200-03	VRV0109B502	V.RESISTOR 5K	4	
		MISCELLANEOUS		
	VJF0304	CLAMPER	1	
	VMP3037	P.C.BOARD HOLDER ANGLE	1	
	VMP3038	P.C.BOARD HOLDER ANGLE	1	
	VMZ1818	BARRIER	1	
	VMZ2164	BARRIER	1	
	VSC3328	SHIELD CASE	1	
	VSC3329	SHIELD CASE	1	
	VSC3331	SHIELD CASE	1	
	XTV3+6FFR	SCREW	8	
	VEP85026A	P.C.BOARD W/COMPONENT		
		HEAD AMP POWER (R)		
		CAPACITORS		
C5001,02	ECST1CD336Z	T.CAPACITOR CH 16V 33U	2	
C5003,04	ECST0GY335	E.CAPACITOR CH 4V 3.3U	2	
C5005,06	ECST1AY335Z	T.CAPACITOR CH 10V 3.3U	2	
D5001-04	MA701	DIODE	4	
IC5001	S-81250HG	IC	1	
IC5002	S-80230AG	IC	1	
Q5001	2SB956-R	TRANSISTOR	1	
Q5002	2SD1280-R	TRANSISTOR	1	

Ref.No.	Part No.	Part Name & Description	Pcs	Remarks
		RESISTORS		
R5001,02	ERJ8GCYJ470	M.RESISTOR CH 1/8W 47	2	
R5004	ERJ14YK2R2	C.RESISTOR 1/4W 2.2	1	
R5006	ERJ14YK2R2	C.RESISTOR 1/4W 2.2	1	
R5007	ERJ6GEYJ103	M.RESISTOR CH1/10W 10K	1	
R5008	ERJ6GEY0R00	M.RESISTOR CH 1/10W 0	1	
R5009	ERJ6GEYJ392	M.RESISTOR CH1/10W 3.9K	1	
R5010	ERJ6GEYJ562	M.RESISTOR CH1/10W 5.6K	1	
	VEP85027A	P.C.BOARD W/COMPONENT		
		HEAD AMP REGULATOR (S)		
		CAPACITORS		
C5001	ECA1HXLV220	E.CAPACITOR 50V 22U	1	
C5002	ECQB1H473JF	P.CAPACITOR 50V 0.047U	1	
C5003	ECQB1H392JF	P.CAPACITOR 50V 3900P	1	
C5004	ECQB1H473JF	P.CAPACITOR 50V 0.047U	1	
C5005,06	ECA1HXLV220	E.CAPACITOR 50V 22U	2	
C5007	ECA1CXLV101	E.CAPACITOR 16V 100U	1	
C5008,09	ECQB1H104JF	P.CAPACITOR 50V 0.1U	2	
C5010,11	ECCD2H331J	C.CAPACITOR 500V 330U	2	
C5012	ECKF1H103KB	C.CAPACITOR 50V 0.01U	1	
C5015	ECKF1H102KB	C.CAPACITOR 50V 1000P	1	
D5001-04	MA165	DIODE	4	
D5005,06	MA701A	DIODE	2	
HS5001	VSC3090	HEAT SINK	1	
IC5001	UPC494C	IC	1	
IC5002	AN7805	IC	1	
L5001	VLQ0242	COIL	1	
P521	VJP1230T	CONNECTOR (MALE)	1	
P522	VJP1230R	CONNECTOR (MALE)	1	
P523	VJP3079	CONNECTOR (MALE)	1	
P525	VJP1230T	CONNECTOR (MALE)	1	
P526	VJP1230G	CONNECTOR (MALE)	1	
P527	VJP1142T	CONNECTOR (MALE)	1	
P708	VJP1143	CONNECTOR (MALE)	1	
Q5001-04	2SB643	TRANSISTOR	4	
Q5005,06	2SK1059	TRANSISTOR	2	
		RESISTORS		
R5001	ERDS2TJ151	C.RESISTOR 1/4W 150	1	
R5002	ERDS2TJ512	C.RESISTOR 1/4W 5.1K	1	
R5003	ERDS2TJ332	C.RESISTOR 1/4W 3.3K	1	
R5004,05	ERDS2TJ222	C.RESISTOR 1/4W 2.2K	2	

OTHER

POWER SUPPLY 1 VEP81045A
POWER SUB 1 VEP81048A

Ref.No.	Part No.	Part Name & Description	Pcs	Remarks
R5006	ERDS2TJ472	C.RESISTOR 1/4W 4.7K	1	
R5007	ERDS2TJ562	C.RESISTOR 1/4W 5.6K	1	
R5008	ERDS2TJ272	C.RESISTOR 1/4W 2.7K	1	
R5009	ERDS2TJ223	C.RESISTOR 1/4W 22K	1	
R5010,11	ERDS2TJ102	C.RESISTOR 1/4W 1K	2	
R5012	ERDS2TJ821	C.RESISTOR 1/4W 820	1	
R5013	ERDS2TJ562	C.RESISTOR 1/4W 5.6K	1	
R5014	ERDS2TJ272	C.RESISTOR 1/4W 2.7K	1	
R5015	ERDS2TJ221	C.RESISTOR 1/4W 220	1	
R5016	ERDS2TJ562	C.RESISTOR 1/4W 5.6K	1	
R5017	ERDS2TJ821	C.RESISTOR 1/4W 820	1	
R5018	ERDS2TJ272	C.RESISTOR 1/4W 2.7K	1	
R5019	ERDS2TJ221	C.RESISTOR 1/4W 220	1	
R5020	ERDS2TJ271	C.RESISTOR 1/4W 270	1	
TP5001-07	VJR0646	TEST POINT	7	
TPG5001,02	VJR0646	TEST POINT	2	
VR5001	VRV0064B502	V.RESISTOR 5K	1	
VR5002	VRV0064B501	V.RESISTOR 500	1	
		MISCELLANEOUS		
	VMP3270	P.C.BOARD HOLDER ANGLE	1	
	XNG3ES	NUT	1	
	XTV3+6F	SCREW	2	
	XYN3+C8	SCREW	1	
	VEP81045A	P.C.BOARD W/COMPONENT		
		POWER SUPPLY 1		
	VEP81048A	P.C.BOARD W/COMPONENT		FOR VEP81045A
		POWER SUB 1		
		CAPACITORS		
C1001-04	ECOS2DA122EA	E.CAPACITOR 200V 1200U	4	
C1005	ECKD3A331KB	C.CAPACITOR 1000V 330P	1	
C1006	ECQB1H472JF	P.CAPACITOR 50V 4700P	1	
C1007	ECA1HXS010	E.CAPACITOR 50V 1U	1	
C1008	ECEA1CNX101	E.CAPACITOR 16V 100U	1	
C1017,18	ECQE10223KF	P.CAPACITOR 10V 0.022U	2	
C1019	ECEA1HNX470	E.CAPACITOR 50V 47U	1	
C1023	ECEA1HNX471	E.CAPACITOR 50V 470U	1	
C1024,25	ECQE1103KF	P.CAPACITOR 0.01U	2	
C1026,27	ECEA1VNX102	E.CAPACITOR 35V 1000U	2	
C1028	ECA1VFZ221L	E.CAPACITOR 35V 220U	1	
C1029	ECA1VXLV221	E.CAPACITOR 50V 220U	1	
C1030	ECQE1474KF	P.CAPACITOR 0.47U	1	
C1031	ECA1EFZ121	E.CAPACITOR 25V 120U	1	
C1032	ECQE1474KF	P.CAPACITOR 0.47U	1	
C1033	ECA1EFZ121	E.CAPACITOR 25V 120U	1	
C1039,40	ECA1CFZ221L	E.CAPACITOR 16V 220U	2	
C1041,42	ECA1AFZ221	E.CAPACITOR 10V 220	2	
C1060	ECQE2155KF	P.CAPACITOR 1.5U	1	
C1061	ECKDNS102MB	C.CAPACITOR 1000P	1	
C1064	ECKDNS102MB	C.CAPACITOR 1000P	1	
C1201,02	ECA1VXS220	E.CAPACITOR 35V 22U	2	
C1203	ECUM1H101JCN	C.CAPACITOR CH 50V 100P	1	
C1204	ECUM1H223ZFN	C.CAPACITOR CH 50V 0.022U	1	
C1205	ECA1CXS100	E.CAPACITOR 16V 10U	1	
C1206	ECUM1H224ZFM	C.CAPACITOR CH 50V 0.22U	1	
C1207	ECUM1H223ZFN	C.CAPACITOR CH 50V 0.022U	1	
C1208	ECUM1H101JCN	C.CAPACITOR CH 50V 100P	1	

Ref.No.	Part No.	Part Name & Description	Pcs	Remarks
C1209	ECUM1H224ZFM	C.CAPACITOR CH 50V 0.22U	1	
C1210	ECUM1H101JCN	C.CAPACITOR CH 50V 100P	1	
C1211	ECUM1H223ZFN	C.CAPACITOR CH 50V 0.022U	1	
C1212	ECA1CXS100	E.CAPACITOR 16V 10U	1	
C1213	ECUM1H224ZFM	C.CAPACITOR CH 50V 0.22U	1	
C1214	ECUM1H223ZFN	C.CAPACITOR CH 50V 0.022U	1	
C1215	ECUM1H101JCN	C.CAPACITOR CH 50V 100P	1	
C1216	ECUM1H224ZFM	C.CAPACITOR CH 50V 0.22U	1	
C1307	ECQU2A104MN	P.CAPACITOR 100V 0.1U	1	
C1309	ECQU2A224MN	P.CAPACITOR 100V 0.1U	1	
D1001	D10XB40H	DIODE	1	
D1002	MA4051M	DIODE	1	
D1003,04	ERB35-02	DIODE	2	
D1010	10E1	DIODE	1	
D1017,18	RP1H	DIODE	2	
D1019	D8LC40	DIODE	1	
D1020	D8LCA20	DIODE	1	
D1021	D8LCA20R	DIODE	1	
D1022,23	MA185	DIODE	2	
D1037	11DQ04	DIODE	1	
D1201	MA151WK	DIODE	1	
D1202	MA151WA	DIODE	1	
D1203,04	TL431CLP	DIODE	2	
D1205	RD16ESB1	DIODE	1	
IC1001	AN7818F	IC	1	
IC1002	AN7918F	IC	1	
IC1201	UPC4741G	IC	1	
JP1001	VJP2824A007	CONNECTOR (MALE)	1	
JP1002	VJP2824A006	CONNECTOR (MALE)	1	
JP1003	VJP1188T	CONNECTOR (MALE)	1	
JP1004	VJP1142T	CONNECTOR (MALE)	1	
L1001	VLQ0501	COIL	1	
L1003	VLQ0134	COIL	1	
L1008	VLQ0504220M	COIL 22UH	1	
L1009	VLQ0236	COIL	1	
P1601,02	VJP3117	CONNECTOR (MALE)	2	
P1604	VJP2824B004	CONNECTOR (MALE)	1	
P1605	VJP1243T	CONNECTOR (MALE)	1	
P1606	VJP1149	CONNECTOR (MALE)	1	
P1607,08	VJP2824B003	CONNECTOR (MALE)	2	
P1609	VJP1150	CONNECTOR (MALE)	1	
P1691,92	VJR0161	CONNECTOR	2	
Q1001	2SC3979	TRANSISTOR	1	
Q1002	2SD637	TRANSISTOR	1	
Q1003	2SB644	TRANSISTOR	1	
Q1008,09	2SB642	TRANSISTOR	2	
Q1010	2SD637	TRANSISTOR	1	
Q1015	2SB951A	TRANSISTOR	1	
Q1016	2SD1277A	TRANSISTOR	1	
Q1017	2SB951A	TRANSISTOR	1	
Q1018	2SD1277A	TRANSISTOR	1	
Q1201	2SD602	TRANSISTOR	1	
Q1202	2SB710	TRANSISTOR	1	
Q1203	2SD602	TRANSISTOR	1	
Q1204	2SB710	TRANSISTOR	1	

POWER SUPPLY 2 VEP81047A
POWER SUB 2 VEP81046A

Ref.No.	Part No.	Part Name & Description	Pcs	Remarks
		RESISTORS		
R36	VEE7930		1	
R42	VEE7931		1	
R1001,02	ERG2SJ333	M.RESISTOR 2W 33K	2	
R1003	ERDS1TJ104	C.RESISTOR 1/2W 100K	1	
R1004	ERG2SJ101	M.RESISTOR 2W 100	1	
R1005,06	ERDS2TJ101	C.RESISTOR 1/4W 100	2	
R1007	ERDS2TJ2R2	C.RESISTOR 1/4W 2.2	1	
R1008	ERDS2TJ102	C.RESISTOR 1/4W 1K	1	
R1025	ERDS2TJ102	C.RESISTOR 1/4W 1K	1	
R1027-30	ERG2SJ104	M.RESISTOR 2W 100K	4	
R1033	ERDS2TJ101	C.RESISTOR 1/4W 100	1	
R1034	ERX3SZJR10	M.RESISTOR 3W 0.1	1	
R1035	ERDS2TJ101	C.RESISTOR 1/4W 100	1	
R1037,38	ERG3SJ102	M.RESISTOR 3W 1K	2	
R1039	ERDS2TJ101	C.RESISTOR 1/4W 100	1	
R1040	ERX3SZJR10	M.RESISTOR 3W 0.1	1	
R1041	ERDS2TJ101	C.RESISTOR 1/4W 100	1	
R1043	ERX1SJR27	M.RESISTOR 1W 0.27	1	
R1044,45	ERDS2TJ101	C.RESISTOR 1/4W 100	2	
R1046	ERG5SJ181	M.RESISTOR 5W 180	1	
R1047	ERDS2TJ1R0	C.RESISTOR 1/4W 1.0	1	
R1058-61	ERDS2TJ102	C.RESISTOR 1/4W 1K	4	
R1081	ERDS1TJ104	C.RESISTOR 1/2W 100K	1	
R1201,02	ERDS2TJ681	C.RESISTOR 1/4W 680	2	
R1203	ERJ6GEYJ101	M.RESISTOR CH1/10W 100	1	
R1204	ERJ6GEYJ330	M.RESISTOR CH1/10W 33	1	
R1205	ERJ6GEYJ332	M.RESISTOR CH1/10W 3.3K	1	
R1206	ERJ6GEYJ104	M.RESISTOR CH1/10W 100K	1	
R1207	ERJ6GEYF333	M.RESISTOR CH1/10W 33K	1	
R1208	ERJ6GEYJ132	M.RESISTOR CH1/10W 1.3K	1	
R1209	ERJ6GEYJ433	M.RESISTOR CH1/10W 43K	1	
R1210	ERJ6GEYJ113	M.RESISTOR CH1/10W 11K	1	
R1211	VRE0034E103	M.RESISTOR CH 1/10W 10K	1	
R1212	ERJ6GEYJ101	M.RESISTOR CH1/10W 100	1	
R1213	ERJ6GEYJ330	M.RESISTOR CH1/10W 33	1	
R1214	ERJ6GEYJ332	M.RESISTOR CH1/10W 3.3K	1	
R1215	ERJ6GEYJ104	M.RESISTOR CH1/10W 100K	1	
R1216	VRE0034E103	M.RESISTOR CH 1/10W 10K	1	
R1217	ERJ6GEYJ101	M.RESISTOR CH1/10W 100	1	
R1218	ERJ6GEYJ330	M.RESISTOR CH1/10W 33	1	
R1219	ERJ6GEYJ332	M.RESISTOR CH1/10W 3.3K	1	
R1220	ERJ6GEYJ104	M.RESISTOR CH1/10W 100K	1	
R1221	ERJ6GEYF333	M.RESISTOR CH1/10W 33K	1	
R1222	ERJ6GEYJ561	M.RESISTOR CH1/10W 560	1	
R1223	ERJ6GEYJ512	M.RESISTOR CH 1/10W 5.1K	1	
R1224	ERJ6GEYJ622	M.RESISTOR CH1/10W 6.2K	1	
R1225	VRE0034E103	M.RESISTOR CH 1/10W 10K	1	
R1226	ERJ6GEYJ101	M.RESISTOR CH1/10W 100	1	
R1227	ERJ6GEYJ330	M.RESISTOR CH1/10W 33	1	
R1228	ERJ6GEYJ332	M.RESISTOR CH1/10W 3.3K	1	
R1229	ERJ6GEYJ104	M.RESISTOR CH1/10W 100K	1	
R1230	VRE0034E103	M.RESISTOR CH 1/10W 10K	1	
R1301	VSF0093	F.RESISTOR	1	
R1302,03	VRE0074	M.RESISTOR	2	
R1306	ERDS1TJ101	C.RESISTOR 1/2W 100	1	
RY1301	VSY1033	RELAY	1	
T1001	VLT0632	TRANSFORMER	1	
T1002	VLT0672	TRANSFORMER	1	
TP2	VJR0646	TEST POINT	1	
TPG1	VJR0646	TEST POINT	1	
VR1001	VRV0063B201	V.RESISTOR 200	1	
VR1201	VRV0063B202	V.RESISTOR 2K	1	
VR1202	VRV0063B302	V.RESISTOR 3K	1	
		MISCELLANEOUS		
	VLT0310	TRANSFORMER	1	
	VMP3083	TR SUPPORT ANGLE	9	
	VMZ0965	CAPACITOR COVER	2	
	VMZ1792	BARRIER	1	
	VMZ1794	BARRIER	1	
	VSC1068	HEAT SINK	1	
	VSC3327	SHIELD CASE	1	
	VSC3370	SHIELD CASE	1	
	VSC3371	SHIELD CASE	1	
	XYN3+F10S	SCREW	2	
	XYN3+F6S	SCREW	10	
	XYN3+F8S	SCREW	4	
	VEP81047A	P.C.BOARD W/COMPONENT		
		POWER SUPPLY 2		
	VEP81046A	P.C.BOARD W/COMPONENT		FOR VEP81047A
		POWER SUB 2		
		CAPACITORS		
C1009,10	ECA1HXS2R2	E.CAPACITOR 50V 2.2U	2	
C1011	ECQF6222KZ	P.CAPACITOR 2200P	1	
C1012	ECQE2155KF	P.CAPACITOR 1.5U	1	
C1013,14	ECA1HXS2R2	E.CAPACITOR 50V 2.2U	2	
C1015	ECQF6222KZ	P.CAPACITOR 2200P	1	
C1016	ECQE2155KF	P.CAPACITOR 1.5U	1	
C1020,21	ECEA1VNX470	E.CAPACITOR 35V 47U	2	
C1034	ECQE1103KF	P.CAPACITOR 0.01U	1	
C1035-38	ECEA1ENX102	E.CAPACITOR 25V 1000U	4	
C1043	ECA1CFZ102	E.CAPACITOR 16V 1000U	1	
C1044,45	ECA1AFZ222	E.CAPACITOR 10V 2200U	2	
C1046	ECQE1103KF	P.CAPACITOR 0.01U	1	
C1047-50	ECA1CFZ222L	E.CAPACITOR 16V 2200U	4	
C1051	ECQE1103KF	P.CAPACITOR 0.01U	1	
C1052	ECEA1AGE103	E.CAPACITOR 10V 10000U	1	
C1053	ECA1AFZ472	E.CAPACITOR 10V 4700U	1	
C1054-57	ECA1HXS2R2	E.CAPACITOR 50V 2.2U	4	
C1101	ECA1VFZ560	E.CAPACITOR 50V 56U	1	
C1102	ECUM1H103KBN	C.CAPACITOR CH 50V 0.01U	1	
C1103	ECEA1AKN100	E.CAPACITOR 10V 10U	1	
C1104	ECUM1E104ZFN	E.CAPACITOR 25V 0.1U	1	
C1105	ECUM1H472KBN	C.CAPACITOR CH 50V 4700P	1	
C1106	ECA1VXS220	E.CAPACITOR 35V 22U	1	
C1107	ECUM1H102JCN	C.CAPACITOR CH 50V 1000P	1	
C1108	ECA1VXS4R7	E.CAPACITOR 35V 4.7U	1	
C1109	ECUM1E104ZFN	E.CAPACITOR 25V 0.1U	1	
C1110	ECUM1E223ZFN	C.CAPACITOR CH 25V 0.022U	1	
C1112	ECUM1E224ZFM	C.CAPACITOR CH 25V 0.22U	1	
C1113	ECUM1H102JCN	C.CAPACITOR CH 50V 1000P	1	
C1114	ECEA1AKN100	E.CAPACITOR 10V 10U	1	
C1115	ECUM1H472KBN	C.CAPACITOR CH 50V 4700P	1	
C1116	ECUM1H473ZFN	C.CAPACITOR CH 50V 0.047U	1	
C1117	ECA1CXS470	E.CAPACITOR 16V 47U	1	
D1005,06	ERC25-04	DIODE	2	
D1007,08	11DQ04	DIODE	2	
D1009	RD2.7ESB	DIODE	1	
D1011,12	ERC25-04	DIODE	2	
D1013,14	11DQ04	DIODE	2	
D1024	D8LCA20	DIODE	1	

Ref.No.	Part No.	Part Name & Description	Pcs	Remarks
D1025	D8LCA20R	DIODE	1	
D1027,28	11DQ04	DIODE	2	
D1029	21DQ04	DIODE	1	
D1030	MA752A	DIODE	1	
D1031-33	MA756	DIODE	3	
D1034	S60SC4M	DIODE	1	
D1035,36	11DQ04	DIODE	2	
D1101	MA3068-M	DIODE	1	
D1102	MA151K	DIODE	1	
D1103	MA153	DIODE	1	
D1104	MA3120-M	DIODE	1	
D1105	21DQ04	DIODE	1	
D1106	MA3075-M	DIODE	1	
D1107	MA153	DIODE	1	
D1108	MA3047M	DIODE	1	
D1109	MA151K	DIODE	1	
IC1101-03	UPC494G	IC	3	
IC1104	UPC339G	IC	1	
L1004	VLT0315	COIL	1	
L1005	VLQ0487	COIL	1	
L1006	VLQ0488	COIL	1	
L1007	VLQ0298	COIL	1	
L1010-12	VLQ0504100M	COIL 10UH	3	
L1013	VLQ0504220M	COIL 22UH	1	
L1014,15	VLQ0504100M	COIL 10UH	2	
L1016	VLQ0486	COIL	1	
P1610,11	VJP2824B002	CONNECTOR (MALE)	2	
P1612	VJP2824B010	CONNECTOR (MALE)	1	
P1681,82	VJR0164	CONNECTOR	2	
Q1004-07	2SC3528	TRANSISTOR	4	
Q1011	2SB642	TRANSISTOR	1	
Q1012	2SD637	TRANSISTOR	1	
Q1013,14	2SA1096	TRANSISTOR	2	
Q1019	2SD1445A	TRANSISTOR	1	
Q1020	2SD637	TRANSISTOR	1	
Q1021	2SB642	TRANSISTOR	1	
Q1022	2SD637	TRANSISTOR	1	
Q1023,24	2SA1096	TRANSISTOR	2	
Q1025	2SD1277A	TRANSISTOR	1	
Q1101-03	UN2113	TRANSISTOR	3	
Q1104	2SB710	TRANSISTOR	1	
Q1105	2SD602	TRANSISTOR	1	
Q1106	UN2213	TRANSISTOR	1	
Q1107	2SD602	TRANSISTOR	1	
Q1108	2SB710	TRANSISTOR	1	
Q1109	2SD1277A	TRANSISTOR	1	
Q1110,11	UN2213	TRANSISTOR	2	
Q1112,13	2SB710	TRANSISTOR	2	
Q1114	UN2213	TRANSISTOR	1	
		RESISTORS		
R77	VEE7929		1	
R1009	ERG2SJ220	M.RESISTOR 2W 22	1	
R1012,13	ERDS1TJ100	C.RESISTOR 1/2W 10	2	
R1014,15	ERX1SJ5R1	M.RESISTOR 1W 5.1	2	
R1018	ERG2SJ220	M.RESISTOR 2W 22	1	
R1021,22	ERDS1TJ100	C.RESISTOR 1/2W 10	2	
R1023,24	ERX1SJ5R1	M.RESISTOR 1W 5.1	2	
R1026	ERQ1CJ4R7	F.RESISTOR 1W 4.7	1	
R1048	ERQ3CJ100	F.RESISTOR 3W 10	1	
R1049	ERDS2TJ101	C.RESISTOR 1/4W 100	1	

Ref.No.	Part No.	Part Name & Description	Pcs	Remarks
R1050	ERX3SZJR10	M.RESISTOR 3W 0.1	1	
R1051	ERDS2TJ101	C.RESISTOR 1/4W 100	1	
R1052	ERDS2TJ472	C.RESISTOR 1/4W 4.7K	1	
R1053	ERX3SZJR10	M.RESISTOR 3W 0.1	1	
R1054-57	ERDS2TJ101	C.RESISTOR 1/4W 100	4	
R1062	ERDS2TJ180	C.RESISTOR 1/4W 18	1	
R1063	ERDS2TJ101	C.RESISTOR 1/4W 100	1	
R1064	ERX3SZJR10	M.RESISTOR 3W 0.1	1	
R1065	ERDS2TJ101	C.RESISTOR 1/4W 100	1	
R1066	ERG1SJ470	M.RESISTOR 1W 47	1	
R1067	ERQ3CJ3R3	F.RESISTOR 3W 3.3	1	
R1068	ERDS2TJ101	C.RESISTOR 1/4W 100	1	
R1069	ERX3SZJR10	M.RESISTOR 3W 0.1	1	
R1070	ERDS2TJ101	C.RESISTOR 1/4W 100	1	
R1071	ERF20HMJ300	W.RESISTOR 20W 30	1	
R1072	ERF5TLK68M	W.RESISTOR 5W 0.68	1	
R1073,74	ERDS2TJ101	C.RESISTOR 1/4W 100	2	
R1075	ERQ12HJ3R3	F.RESISTOR 1/2W 3.3	1	
R1076	VRE0064	M.RESISTOR CH 1/10W	1	
R1078,79	ERDS2TJ101	C.RESISTOR 1/4W 100	2	
R1080	ERDS2TJ390	C.RESISTOR 1/4W 39	1	
R1101	ERJ6GEYF472	M.RESISTOR CH1/10W 4.7K	1	
R1102	ERJ6GEYJ331	M.RESISTOR CH1/10W 330	1	
R1103	ERJ6GEYJ103	M.RESISTOR CH1/10W 10K	1	
R1104	ERJ6GEYG181	M.RESISTOR CH1/10W 180	1	
R1105,06	ERJ6GEYJ222	M.RESISTOR CH1/10W 2.2K	2	
R1107	ERJ6GEYJ223	M.RESISTOR CH1/10W 22K	1	
R1108	ERJ6GEYJ101	M.RESISTOR CH1/10W 100	1	
R1109	ERJ6GEYJ561	M.RESISTOR CH1/10W 560	1	
R1110	ERJ6GEYJ101	M.RESISTOR CH1/10W 100	1	
R1111	ERJ6GEYJ393	M.RESISTOR CH1/10W 39K	1	
R1112	ERJ6GEYJ682	M.RESISTOR CH1/10W 6.8K	1	
R1113	ERJ6GEYJ393	M.RESISTOR CH1/10W 39K	1	
R1114	ERJ6GEYJ223	M.RESISTOR CH1/10W 22K	1	
R1115	ERJ6GEYF333	M.RESISTOR CH1/10W 33K	1	
R1116	ERJ6GEYG153	M.RESISTOR CH1/10W 15K	1	
R1117	ERJ6GEYJ393	M.RESISTOR CH1/10W 39K	1	
R1118	ERJ6GEYJ223	M.RESISTOR CH1/10W 22K	1	
R1119	ERJ6GEYJ102	M.RESISTOR CH1/10W 1K	1	
R1120,21	ERJ6GEYJ223	M.RESISTOR CH1/10W 22K	2	
R1122	ERJ6GEYF124	M.RESISTOR CH1/10W 120K	1	
R1123-25	ERJ6GEYJ102	M.RESISTOR CH1/10W 1K	3	
R1126	ERJ6GEYJ223	M.RESISTOR CH1/10W 22K	1	
R1127-29	ERJ6GEYJ473	M.RESISTOR CH1/10W 47K	3	
R1130	ERJ6GEYG153	M.RESISTOR CH1/10W 15K	1	
R1131	ERJ6GEYJ223	M.RESISTOR CH1/10W 22K	1	
R1132	ERJ6GEYF472	M.RESISTOR CH1/10W 4.7K	1	
R1133,34	ERJ6GEYJ103	M.RESISTOR CH1/10W 10K	2	
R1135	ERJ6GEYJ104	M.RESISTOR CH1/10W 100K	1	
R1136	ERJ6GEYF333	M.RESISTOR CH1/10W 33K	1	
R1137	ERG1SJ470	M.RESISTOR 1W 47	1	
R1138	ERJ6GEYJ391	M.RESISTOR CH1/10W 390	1	
R1139	ERJ6GEYJ392	M.RESISTOR CH1/10W 3.9K	1	
R1140	ERJ6GEYF472	M.RESISTOR CH1/10W 4.7K	1	
R1141	ERJ6GEYJ102	M.RESISTOR CH1/10W 1K	1	
R1142	ERJ6GEYJ103	M.RESISTOR CH1/10W 10K	1	
R1143	ERJ6GEYJ331	M.RESISTOR CH1/10W 330	1	
R1144,45	ERJ6GEYJ222	M.RESISTOR CH1/10W 2.2K	2	
R1146	ERJ6GEYJ561	M.RESISTOR CH1/10W 560	1	
R1147	ERJ6GEYJ103	M.RESISTOR CH1/10W 10K	1	
R1148	ERJ6GEYG153	M.RESISTOR CH1/10W 15K	1	
R1149	ERJ6GEYJ101	M.RESISTOR CH1/10W 100	1	
R1150	ERJ6GEYJ221	M.RESISTOR CH1/10W 220	1	
R1151	ERJ6GEYG153	M.RESISTOR CH1/10W 15K	1	
R1152,53	ERJ6GEYJ512	M.RESISTOR CH 1/10W 5.1K	2	
R1154	ERJ6GEYJ103	M.RESISTOR CH1/10W 10K	1	
R1155	ERJ6GEYJ101	M.RESISTOR CH1/10W 100	1	
R1156,57	ERJ6GEYJ102	M.RESISTOR CH1/10W 1K	2	
R1158	ERJ6GEYJ103	M.RESISTOR CH1/10W 10K	1	
R1159	ERJ6GEYJ821	M.RESISTOR CH1/10W 820	1	
R1160	ERJ6GEYJ152	M.RESISTOR CH1/10W 1.5K	1	
R1161	ERJ6GEYJ562	M.RESISTOR CH1/10W 5.6K	1	
R1162	ERJ6GEYJ103	M.RESISTOR CH1/10W 10K	1	
R1163	ERJ6GEYJ102	M.RESISTOR CH1/10W 1K	1	

POWER SUB 3 VEP81055B
EJECT VEP80591A

Ref.No.	Part No.	Part Name & Description	Pcs	Remarks
T1003	VLT0673	TRANSFORMER	1	
T1004	VLT0674	TRANSFORMER	1	
T1005	VLT0675	TRANSFORMER	1	
T1006-09	VLT0638	TRANSFORMER	4	
TG1001	VSQ0796	THERMAL GUARD	1	
TP1001	VJR0646	TEST POINT	1	
VR1101	VRV0064B202	V.RESISTOR 2K	1	
VR1102	VRV0064B203	V.RESISTOR 20K	1	
VR1103	VRV0064B202	V.RESISTOR 2K	1	
		MISCELLANEOUS		
	VMP3083	TR SUPPORT ANGLE	9	
	VMP3084	P.C.BOARD HOLDER ANGLE	5	
	VMZ1793	BARRIER	1	
	VMZ1796	BARRIER	1	
	VSC3368	SHIELD CASE	1	
	VSC3369	SHIELD CASE	1	
	XYN3+F6S	SCREW	14	
	XYN3+F8S	SCREW	4	
	VEP81055B	P.C.BOARD W/COMPONENT		
		POWER SUB 3		
ARR1301	VSF0086	F.RESISTOR	1	
		CAPACITORS		
C1301,02	ECQU2A224MN	P.CAPACITOR 100V 0.1U	2	
C1304	ECKDNS222ME	C.CAPACITOR 2200P	1	
C1306	ECKDNS222ME	C.CAPACITOR 2200P	1	
C1308	ECQU2A224MN	P.CAPACITOR 100V 0.1U	1	
C1310,11	ECKDNS471MB	C.CAPACITOR 470P	2	
L1301	VLQ0499	COIL	1	
L1302	VLQ0500	COIL	1	
		RESISTORS		
R1308	ERC12AGM334	S.RESISTOR 1/2W 330K	1	
		MISCELLANEOUS		
	VMZ0965	CAPACITOR COVER	4	
	VMZ1798	BARRIER	3	
	VMZ1799	BARRIER	1	
	VMZ1810	BARRIER	1	

POWER LED VEP80628A
AUTO OFF VEP80627A

Ref.No.	Part No.	Part Name & Description	Pcs	Remarks
	VEP80591A	P.C.BOARD W/COMPONENT		
		EJECT		
P391	VJP1230T	CONNECTOR (MALE)	1	
SW1	VSP0543	SWITCH	1	
	VEP80628A	P.C.BOARD W/COMPONENT		
		POWER LED		
D1	EBG5504S	DIODE	1	
P395	VJP1230T	CONNECTOR (MALE)	1	
		RESISTORS		
R1	ERDS2TJ221	C.RESISTOR 1/4W 220	1	
		MISCELLANEOUS		
	VMX0473	LED HOLDER	1	
	VEP80627A	P.C.BOARD W/COMPONENT		
		AUTO OFF		
D1	VLL0029	DIODE	1	
P392	VJP1230R	CONNECTOR (MALE)	1	
P393	VJP1232T	CONNECTOR (MALE)	1	
P394	VJP1230T	CONNECTOR (MALE)	1	
		RESISTORS		
R1-R3	ERDS2TJ151	C.RESISTOR 1/4W 150	3	

RF MODE VEP86097A

FR SW VEP86093A

FR FUNCTION VEP86094A

Ref.No.	Part No.	Part Name & Description	Pcs	Remarks
	VEP86097A	P.C.BOARD W/COMPONENT		
		RF MODE		
		CAPACITORS		
C1	ECEV1CV470Q	E.CAPACITOR 16V 47U	1	
D1-D9	MA151K	DIODE	9	
D10-15	MA151K	DIODE	6	
P310	VJP1879T	CONNECTOR (MALE)	1	
P311	VJP1881T	CONNECTOR (MALE)	1	
		RESISTORS		
R1-R9	ERJ6GEYJ103	M.RESISTOR CH1/10W 10K	9	
R10-15	ERJ6GEYJ103	M.RESISTOR CH1/10W 10K	6	
	VEP86093A	P.C.BOARD W/COMPONENT		
		FR SW		
		CAPACITORS		
C1-C3	ECA1AXS680	E.CAPACITOR 10V 68U	3	
C4-C9	ECUM1E104ZFN	E.CAPACITOR 25V 0.1U	6	
C10-13	ECUM1E104ZFN	E.CAPACITOR 25V 0.1U	4	
C4D	ECA1HXSR33	E.CAPACITOR 50V 0.33U	1	
D1-D9	MA151K	DIODE	9	
D10-14	MA151K	DIODE	5	
IC1,C2	MC74HC244AF	IC	2	
IC3,C4	MC74HC138AF	IC	2	
IC5-C7	MC74HC273AF	IC	3	
IC8	MC74HC04AF	IC	1	
IC9	MC74HC10F	IC	1	
IC10	MC74HC27F	IC	1	
IC11-13	M54514AP	IC	3	
LED15	EBR5504S	DIODE	1	
LED16,17	EBG5504S	DIODE	2	
LED18	LN41YCPHLU	IC	1	
LED19	LN11WP34	LED	1	
LED20-22	EBG5504S	DIODE	3	
LES15-18	VMX0473	LED SPACER	4	
LES19	VMX1604	LED SPACER	1	
LES20-22	KL04	RP	3	

Ref.No.	Part No.	Part Name & Description	Pcs	Remarks
P315	VJP1248T	CONNECTOR (MALE)	1	
P316	VJP1248R	CONNECTOR (MALE)	1	
P317	VJP3091	CONNECTOR (MALE)	1	
P318	VJP1248T	CONNECTOR (MALE)	1	
P319	VJP1248R	CONNECTOR (MALE)	1	
P320	VJP1245T	CONNECTOR (MALE)	1	
P321	VJP1248T	CONNECTOR (MALE)	1	
P322	VJP3090	CONNECTOR (MALE)	1	
Q1,Q2	UN1224	TRANSISTOR	2	
		RESISTORS		
R1-R9	ERJ6GEYJ103	M.RESISTOR CH1/10W 10K	9	
R10-14	ERJ6GEYJ103	M.RESISTOR CH1/10W 10K	5	
R15-20	ERJ6GEYJ121	M.RESISTOR CH1/10W 120	6	
R21	ERJ6GEYJ391	M.RESISTOR CH1/10W 390	1	
R22-29	ERJ6GEYJ121	M.RESISTOR CH1/10W 120	8	
R30-37	ERJ6GEYJ391	M.RESISTOR CH1/10W 390	8	
R38-53	ERJ6GEYJ103	M.RESISTOR CH1/10W 10K	16	
R54	ERJ6GEYJ823	M.RESISTOR CH1/10W 82K	1	
SW1	VSP0554	SWITCH	1	
SW2-W4	VSP0544	SWITCH	3	
SW5	VSP0542	SWITCH	1	
SW6	VSP0545	SWITCH	1	
SW7	VSP0548	SWITCH	1	
SW8	VSP0552	SWITCH	1	
SW9	VSP0549	SWITCH	1	
SW10	VSP0550	SWITCH	1	
SW11	VSP0551	SWITCH	1	
SW12	VSP0546	SWITCH	1	
SW13	VSP0547	SWITCH	1	
SW14	VSP0553	SWITCH	1	
		MISCELLANEOUS		
	VGU5319	SWITCH COVER	1	ENTRLY OUT
	VGU5346	SWITCH COVER	3	EXECUTE ETC
	VGU5345	SWITCH COVER	1	READY
	VGU5320	SWITCH COVER	1	PLAY
	VGU5324	SWITCH COVER	1	STOP
	VGU5321	SWITCH COVER	1	REC 1 EDIT
	VGU5325	SWITCH COVER	1	JOG
	VGU5326	SWITCH COVER	1	VAR
	VGU5327	SWITCH COVER	1	SHTL
	VGU5323	SWITCH COVER	1	FF
	VGU5318	SWITCH COVER	1	ENTRY IN
	VEP86094A	P.C.BOARD W/COMPONENT		
		FR FUNCTION		
		CAPACITORS		
C1	ECEV1CV470Q	E.CAPACITOR 16V 47U	1	

FR BASE 1 VEP86095A

Ref.No.	Part No.	Part Name & Description	Pcs	Remarks
D1-D9	MA151K	DIODE	9	
D10-37	MA151K	DIODE	28	
P312,13	VJP1879T	CONNECTOR (MALE)	2	
P314	VJP1876T	CONNECTOR (MALE)	1	
		RESISTORS		
R1-R9	ERJ6GEYJ103	M.RESISTOR CH1/10W 10K	9	
R10-16	ERJ6GEYJ103	M.RESISTOR CH1/10W 10K	7	
	VEP86095A	P.C.BOARD W/COMPONENT		
		FR BASE 1		
BT1	VSB0010	BATTERY	1	
		CAPACITORS		
C1	ECUM1H471JCN	C.CAPACITOR CH 50V 470P	1	
C2	ECUM1H473ZFN	C.CAPACITOR CH 50V 0.047U	1	
C3	ECQB1H472JF	P.CAPACITOR 50V 4700P	1	
C4	ECA1EXLV221X	E.CAPACITOR 25V 220U	1	
C5	ECA1CXS470	E.CAPACITOR 16V 47U	1	
C6	ECA1VXLV221	E.CAPACITOR 50V 220U	1	
C7	ECA1AXLV471X	E.CAPACITOR 10V 470U	1	
C8	ECUM1E104ZFN	E.CAPACITOR 25V 0.1U	1	
C9	ECUM1H150JCN	C.CAPACITOR CH 50V 15P	1	
C10	ECUM1E104ZFN	E.CAPACITOR 25V 0.1U	1	
C11	ECUM1H472KBN	C.CAPACITOR CH 50V 4700P	1	
C12-27	ECUM1E104ZFN	E.CAPACITOR 25V 0.1U	16	
C28	ECA1CXLV101	E.CAPACITOR 16V 100U	1	
C29-31	ECUM1E104ZFN	E.CAPACITOR 25V 0.1U	3	
C35	ECCD2H331K2	C.CAPACITOR 500V 330U	1	
C36	ECQB1H102JF	P.CAPACITOR 50V 1000P	1	
C37,38	ECCF1H121JC	C.CAPACITOR 50V 120P	2	
D1	D8LCA20	DIODE	1	
D2	MA752A	DIODE	1	
D3	MA3120	DIODE	1	
D4	ERB35-02	DIODE	1	
D5	MA151K	DIODE	1	
D6	HZ3ALL	DIODE	1	
D7	11ES1	DIODE	1	
D8	MA151K	DIODE	1	
IC1	UPC494GS	IC	1	
IC2	HD63484PS8	IC	1	
IC3,C4	M5256BFP-70	IC	2	
IC5-C9	MC74HC574AF	IC	5	
IC10	MC74HC574AF	IC	1	
IC11,12	MC74HCT245AF	IC	2	
IC13	HD74HC674P	IC	1	
IC14	VSI0906	IC	1	
IC15	VSI0907	IC	1	
IC16	MC74HC04AF	IC	1	
IC17	HD146818AFP	IC	1	

Ref.No.	Part No.	Part Name & Description	Pcs	Remarks
IC18,19	SN74ALS245AS	IC	2	
IC20	MAX690CPA	IC	1	
IC21	AM26LS32M	IC	1	
IC22	AM26LS31M	IC	1	
IC14S	VJS3096328	CONNECTOR (FEMALE)	1	
IC15S	VJS3096328	CONNECTOR (FEMALE)	1	
J301	VJP3008	CONNECTOR (MALE)	1	
L1	VLQ0504821K	COIL 820UH	1	
L2	VLQ0504680K	COIL 68UH	1	
L3	BNX002-01	COIL H	1	
L4	VLT0637	COIL	1	
P304	VJP1245T	CONNECTOR (MALE)	1	
P305	VJP3098B060	CONNECTOR (MALE)	1	
P331	VJP1248T	CONNECTOR (MALE)	1	
P332	VJP1248R	CONNECTOR (MALE)	1	
Q1	2SB710A	TRANSISTOR	1	
Q2	2SK1034	TRANSISTOR	1	
Q3	2SB709	TRANSISTOR	1	
		RESISTORS		
R1	ERJ6GEYJ103	M.RESISTOR CH1/10W 10K	1	
R2	ERJ6GEYF472	M.RESISTOR CH1/10W 4.7K	1	
R3,R4	ERJ6GEYJ222	M.RESISTOR CH1/10W 2.2K	2	
R5	ERJ6GEYJ102	M.RESISTOR CH1/10W 1K	1	
R6	ERG2SJ680U	M.RESISTOR 2W 68	1	
R7	ERG2SJ820U	M.RESISTOR 2W 82	1	
R8	ERG2SJ471	M.RESISTOR 2W 470	1	
R9	ERJ6GEYJ102	M.RESISTOR CH1/10W 1K	1	
R10,11	ERJ6GEYJ392	M.RESISTOR CH1/10W 3.9K	2	
R12	ERJ6GEYG153	M.RESISTOR CH1/10W 15K	1	
R13	ERJ6GEYJ393	M.RESISTOR CH1/10W 39K	1	
R14	ERJ6GEYJ681	M.RESISTOR CH1/10W 680	1	
R15	ERJ6GEYJ104	M.RESISTOR CH1/10W 100K	1	
R16	ERJ6GEYJ222	M.RESISTOR CH1/10W 2.2K	1	
R17,18	ERJ6GEYF472	M.RESISTOR CH1/10W 4.7K	2	
R19	ERJ6GEYJ561	M.RESISTOR CH1/10W 560	1	
R20	ERDS2TJ391	C.RESISTOR 1/4W 390	1	
R21	ERDS2TJ470	C.RESISTOR 1/4W 47	1	
R22,23	ERJ6GEYJ103	M.RESISTOR CH1/10W 10K	2	
RA1-A6	EXBF9E223J	COMBI.R-R 22K	6	
RA7	EXBF5E223J	COMBI.R-R 22K	1	
RA8,A9	EXBF5E331J	COMBI.R-R 330	2	
RA10,11	EXBF5E681J	COMBI.R-R 680	2	
SP1	VSQ0558	BUZZER	1	
TP1-P9	VJR0646	TEST POINT	9	
TPG1,G2	VJR0646	TEST POINT	2	
VC1	ECV1ZW20X53T	E.CAPACITOR 50V 20P	1	

FR BASE 2 VEP86096C
HEAD PHONE JACK 1 VEP80588A

Ref.No.	Part No.	Part Name & Description	Pcs	Remarks
VR1	VRV0109B102	V.RESISTOR 1K	1	
X1	VSX0071	CRYSTAL OSCILLATOR	1	
	VEP86096C	P.C.BOARD W/COMPONENT		
		FR BASE 2		
		CAPACITORS		
C1,C2	ECQB1H333JF	P.CAPACITOR 50V 0.033U	2	
C3	ECQB1H103JF	P.CAPACITOR 50V 0.01U	1	
C4	ECQB1H104JF	P.CAPACITOR 50V 0.1U	1	
C5,C6	ECUM1H330JCN	C.CAPACITOR CH 50V 33P	2	
C7-C9	ECUM1E104ZFN	E.CAPACITOR 25V 0.1U	3	
C10-39	ECUM1E104ZFN	E.CAPACITOR 25V 0.1U	30	
C40	ECA1AXS680	E.CAPACITOR 10V 68U	1	
C41	ECA1HXS100	E.CAPACITOR 50V 10U	1	
C42	ECUM1E104ZFN	E.CAPACITOR 25V 0.1U	1	
C43,44	ECCF1H121JC	C.CAPACITOR 50V 120P	2	
C50	ECKF1H471KB	C.CAPACITOR 50V 470P	1	
D1	MA151K	DIODE	1	
IC1	MC74HC08AF	IC	1	
IC2-C4	MC74HC244AF	IC	3	
IC5,C6	MC74HC4040F	IC	2	
IC7	MC74HC04AF	IC	1	
IC8	MC74HC74AF	IC	1	
IC9	MC74HC164F	IC	1	
IC10	MC74HC74AF	IC	1	
IC11	MC74HC32AF	IC	1	
IC12	MC74HC165F	IC	1	
IC13	TC74HC4094AF	IC	1	
IC14	UPD71054GB	IC	1	
IC15	MB89363BPF	IC	1	
IC16	MC74HC00AF	IC	1	
IC17,18	VSI0908	IC	2	
IC19	MC74HC14AF	IC	1	
IC20	MC74HCU04F	IC	1	
IC21	HD68HC000PS1	IC	1	
IC22	VSI1036H	IC	1	
IC23	VSI1037H	IC	1	
IC24,25	M5256BFP-70	IC	2	
IC26	VSI0903	IC	1	
IC27	VSI0904	IC	1	
IC28	VSI1038	IC	1	
IC29	MC74HC164F	IC	1	
IC30	MB8421-90LPF	IC	1	
IC31	TC74HC148AF	IC	1	
IC32	SN74ALS244BS	IC	1	
IC17S	VJS3096328	CONNECTOR (FEMALE)	1	
IC18S	VJS3096328	CONNECTOR (FEMALE)	1	
IC21S	VJS3111	CONNECTOR (FEMALE)	1	
IC22S	VJS3110	CONNECTOR (FEMALE)	1	
IC23S	VJS3110	CONNECTOR (FEMALE)	1	
IC26S	VJS2575	CONNECTOR (FEMALE)	1	
IC27S	VJS2575	CONNECTOR (FEMALE)	1	
IC28S	VJS2575	CONNECTOR (FEMALE)	1	

Ref.No.	Part No.	Part Name & Description	Pcs	Remarks
P301	VJP1152	CONNECTOR (MALE)	1	
P302	VJP1244T	CONNECTOR (MALE)	1	
P333	VJP3091	CONNECTOR (MALE)	1	
P334	VJP3098B060	CONNECTOR (MALE)	1	
Q1	2SD946A	TRANSISTOR	1	
Q2-Q4	UN2111	TRANSISTOR	3	
Q5	2SD601	TRANSISTOR	1	
Q6,Q7	UN2214	TRANSISTOR	2	
		RESISTORS		
R1,R2	ERJ6GEYJ103	M.RESISTOR CH1/10W 10K	2	
R3	ERJ6GEYG153	M.RESISTOR CH1/10W 15K	1	
R4,R5	ERJ6GEYF472	M.RESISTOR CH1/10W 4.7K	2	
R6,R7	ERJ6GEYJ332	M.RESISTOR CH1/10W 3.3K	2	
R8	ERJ6GEYJ473	M.RESISTOR CH1/10W 47K	1	
R9	ERJ6GEYJ562	M.RESISTOR CH1/10W 5.6K	1	
R10	ERJ6GEYF472	M.RESISTOR CH1/10W 4.7K	1	
R11	ERJ6GEYJ473	M.RESISTOR CH1/10W 47K	1	
R12	ERJ6GEYJ103	M.RESISTOR CH1/10W 10K	1	
R13	ERJ6GEYJ222	M.RESISTOR CH1/10W 2.2K	1	
R14	ERJ6GEYF333	M.RESISTOR CH1/10W 33K	1	
R15	ERJ6GEYJ104	M.RESISTOR CH1/10W 100K	1	
R16	ERJ6GEYJ470	M.RESISTOR CH1/10W 47	1	
R17	ERJ6GEYJ223	M.RESISTOR CH1/10W 22K	1	
R18-21	ERJ6GEYF472	M.RESISTOR CH1/10W 4.7K	4	
R22	ERJ6GEYJ104	M.RESISTOR CH1/10W 100K	1	
R23	ERJ6GEYJ681	M.RESISTOR CH1/10W 680	1	
R24,25	ERJ6GEYJ561	M.RESISTOR CH1/10W 560	2	
R26	ERJ6GEYJ182	M.RESISTOR CH1/10W 1.8K	1	
R27	ERJ6GEYF472	M.RESISTOR CH1/10W 4.7K	1	
R50	ERDS2TJ102	C.RESISTOR 1/4W 1K	1	
RA1	EXBF9E472J	COMBI.R-R 4.7K	1	
RA2	EXBF5E472J	COMBI.R-R 4.7K	1	
RA3,A4	EXBF9E472J	COMBI.R-R 4.7K	2	
RA5	EXBF5E472J	COMBI.R-R 4.7K	1	
SW1	VSS023706	SWITCH	1	
SW3	EVQQS205K	SWITCH	1	
VR1	VRV0109B103	V.RESISTOR 10K	1	
VR2	VRV0109B503	V.RESISTOR 50K	1	
X1	VSX0451	CRYSTAL OSCILLATOR	1	
	VEP80588A	P.C.BOARD W/COMPONENT		
		HEAD PHONE JACK 1		
		CAPACITORS		
C9001	ECA1CXLV101	E.CAPACITOR 16V 100U	1	

REMOTE JACK 1 VEP80590A
REMOTE JACK 2 VEP80609A

Ref.No.	Part No.	Part Name & Description	Pcs	Remarks
C9002,03	ECQV1H104JZ	P.CAPACITOR 50V 0.1U	2	
J303	VJJ0150	HEADPHONE JACK	1	
P341	VJP1232T	CONNECTOR (MALE)	1	
		RESISTORS		
R9001	ERDS2TJ100	C.RESISTOR 1/4W 10	1	
VR9001	EVUKEAF20A14	V.RESISTOR 10K	1	
	VEP80590A	P.C.BOARD W/COMPONENT		
		REMOTE JACK 1		
		CAPACITORS		
C001-07	ECUM1E104ZFN	E.CAPACITOR 25V 0.1U	7	
C008-17	ECUM1H103ZFN	C.CAPACITOR CH 50V 0.01U	10	
IC001-03	MC10H125	IC	3	
IC004	74F827SC	IC	1	
IC005-08	SN74S1051NS	DIODE	4	
J433,34	VJS2642A025	CONNECTOR (FEMALE)	2	
J436,37	VJS2642A015	CONNECTOR (FEMALE)	2	
J438-40	VJS2642A009	CONNECTOR (FEMALE)	3	
J441	VJS2642A025	CONNECTOR (FEMALE)	1	
P441	VJP3010A040	CONNECTOR (MALE)	1	
P442	VJP3083	CONNECTOR (MALE)	1	
P443	VJP3078	CONNECTOR (MALE)	1	
P444	VJP3080	CONNECTOR (MALE)	1	
P445	VJP3079	CONNECTOR (MALE)	1	
P449,50	VJP1230T	CONNECTOR (MALE)	2	
P452	VJP3083	CONNECTOR (MALE)	1	
P486	VJP1232T	CONNECTOR (MALE)	1	
P487	VJP3078	CONNECTOR (MALE)	1	
P488	VJP1230T	CONNECTOR (MALE)	1	
		RESISTORS		
R011-20	ERJ6GEYJ101	M.RESISTOR CH1/10W 100	10	
R021	ERJ6GEY0R00	M.RESISTOR CH 1/10W 0	1	
R022-41	ERJ6GEYJ510	M.RESISTOR CH1/10W 51	20	
		MISCELLANEOUS		
	VMP3093	P.C.BOARD HOLDER ANGLE	1	
	VXQ0102	BOSS	12	
	VXQ0328	BOSS	4	

REMOTE JACK 3 VEP80589A
VIDEO IN/OUT VEP88075B

Ref.No.	Part No.	Part Name & Description	Pcs	Remarks
	VEP80609A	P.C.BOARD W/COMPONENT		
		REMOTE JACK 2		
		CAPACITORS		
C1	ECUM1E224ZFM	C.CAPACITOR CH 25V 0.22U	1	
IC1	MB89363BPF	IC	1	
IC2	MC74HC138AF	IC	1	
J435	VJS3017	CONNECTOR (FEMALE)	1	
L1	VLF0931	FILTER	1	
P451	VJP3098B026	CONNECTOR (MALE)	1	
Q1-Q9	UN2213	TRANSISTOR	9	
Q10-18	UN2213	TRANSISTOR	9	
Q19-23	DTC144EK	TRANSISTOR	5	
		RESISTORS		
R1-R9	ERJ6GEYJ103	M.RESISTOR CH1/10W 10K	9	
R10-48	ERJ6GEYJ103	M.RESISTOR CH1/10W 10K	39	
	VEP80589A	P.C.BOARD W/COMPONENT		
		REMOTE JACK 3		
J443	VJP3008	CONNECTOR (MALE)	1	
P455	VJP3080	CONNECTOR (MALE)	1	
P456	VJP1235T	CONNECTOR (MALE)	1	
	VEP88075B	P.C.BOARD W/COMPONENT		
		VIDEO IN/OUT		

AUDIO IN/OUT MONITOR VEP84122A

Ref.No.	Part No.	Part Name & Description	Pcs	Remarks
		CAPACITORS		
C1	ECA1CXLV470	E.CAPACITOR 16V 47U	1	
C2	ECUM1E104ZFN	E.CAPACITOR 25V 0.1U	1	
C3,C4	ECA1CXLV470	E.CAPACITOR 16V 47U	2	
C5	ECUM1E104ZFN	E.CAPACITOR 25V 0.1U	1	
C6	ECA1CXLV470	E.CAPACITOR 16V 47U	1	
C10-12	ECUM1H104ZFN	C.CAPACITOR CH 50V 0.1U	3	
D1,D2	MA151K	DIODE	2	
IC1	AN78L09	IC	1	
IC2	AN79L09	IC	1	
P431	VJP2739B010	CONNECTOR (MALE)	1	
P432	VJP1248T	CONNECTOR (MALE)	1	
P433	VJP1243T	CONNECTOR (MALE)	1	
P434	VJP1244T	CONNECTOR (MALE)	1	
Q1	2SA1254	TRANSISTOR	1	
Q2	2SC2188	TRANSISTOR	1	
Q3	2SA1254	TRANSISTOR	1	
Q4	2SC2188	TRANSISTOR	1	
		RESISTORS		
R1,R2	VRE0034E750	M.RESISTOR CH 1/10W 75	2	
R3	ERJ6GEYJ334	M.RESISTOR CH1/10W 330K	1	
R4	ERJ6GEYJ332	M.RESISTOR CH1/10W 3.3K	1	
R5	ERJ6GEYJ221	M.RESISTOR CH1/10W 220	1	
R6	ERJ6GEYJ470	M.RESISTOR CH1/10W 47	1	
R7	ERJ6GEYJ102	M.RESISTOR CH1/10W 1K	1	
R8	ERJ6GEYJ330	M.RESISTOR CH1/10W 33	1	
R9	ERJ6GEYJ334	M.RESISTOR CH1/10W 330K	1	
R10	ERJ6GEYJ332	M.RESISTOR CH1/10W 3.3K	1	
R11,12	ERJ6GEYJ470	M.RESISTOR CH1/10W 47	2	
R13	ERJ6GEYJ102	M.RESISTOR CH1/10W 1K	1	
R14	ERJ6GEYJ330	M.RESISTOR CH1/10W 33	1	
R15,16	ERJ6GEYJ100	M.RESISTOR CH1/10W 10	2	
R17,18	ERJ6GEYG151	M.RESISTOR CH1/10W 150	2	
SW1,W2	VSS0119	SWITCH	2	
	VEP84122A	P.C.BOARD W/COMPONENT		
		AUDIO IN/OUT MONITOR		
		CAPACITORS		
C4001	ECEA1EBZ470	E.CAPACITOR 25V 47U	1	
C4002,03	ECEA1EBZ100	E.CAPACITOR 25V 10U	2	
C4004	ECEA1EBZ470	E.CAPACITOR 25V 47U	1	
C4005,06	ECEA1EBZ100	E.CAPACITOR 25V 10U	2	

Ref.No.	Part No.	Part Name & Description	Pcs	Remarks
C4011-14	ECEA1EPZ221	E.CAPACITOR 25V 220U	4	
C4015-18	ECEA1EPZ101	E.CAPACITOR 25V 100U	4	
C4021-34	ECUM1H103ZFN	C.CAPACITOR CH 50V 0.01U	14	
C4041-44	ECCF1H220JC	C.CAPACITOR 50V 22P	4	
D4001-04	MA151K	DIODE	4	
IC4001-04	NJM5532MD	IC	4	
P461	VJP3083	CONNECTOR (MALE)	1	
P462	VJP1230T	CONNECTOR (MALE)	1	
P463	VJP3083	CONNECTOR (MALE)	1	
P464	VJP1230T	CONNECTOR (MALE)	1	
P465	VJP1234T	CONNECTOR (MALE)	1	
P466	VJP1231T	CONNECTOR (MALE)	1	
P467	VJP1230T	CONNECTOR (MALE)	1	
P468	VJP1234T	CONNECTOR (MALE)	1	
P469	VJP1231T	CONNECTOR (MALE)	1	
Q4001	UN2213	TRANSISTOR	1	
Q4002	2SD601-R	TRANSISTOR	1	
Q4003	UN2213	TRANSISTOR	1	
Q4004	2SD601-R	TRANSISTOR	1	
Q4006	UN2213	TRANSISTOR	1	
Q4007,08	2SD601-R	TRANSISTOR	2	
Q4009	2SD602	TRANSISTOR	1	
Q4010	2SB710	TRANSISTOR	1	
		RESISTORS		
R4001	ERJ6GEYJ104	M.RESISTOR CH1/10W 100K	1	
R4002-04	ERJ6GEYJ103	M.RESISTOR CH1/10W 10K	3	
R4005	ERJ6GEYJ104	M.RESISTOR CH1/10W 100K	1	
R4006	ERJ6GEYF472	M.RESISTOR CH1/10W 4.7K	1	
R4007	ERJ6GEY0R00	M.RESISTOR CH 1/10W 0	1	
R4008,09	ERJ6GEYJ104	M.RESISTOR CH1/10W 100K	2	
R4010-12	ERJ6GEYJ103	M.RESISTOR CH1/10W 10K	3	
R4013	ERJ6GEYJ104	M.RESISTOR CH1/10W 100K	1	
R4014	ERJ6GEYF472	M.RESISTOR CH1/10W 4.7K	1	
R4015	ERJ6GEY0R00	M.RESISTOR CH 1/10W 0	1	
R4016	ERJ6GEYJ104	M.RESISTOR CH1/10W 100K	1	
R4017	VRE0034E152	M.RESISTOR CH 1/10W 1.5K	1	
R4018	VRE0034E151	M.RESISTOR CH 1/10W 150	1	
R4019	VRE0034E332	M.RESISTOR CH 1/10W 3.3K	1	
R4020	VRE0034E181	M.RESISTOR CH 1/10W 180	1	
R4021	VRE0034E152	M.RESISTOR CH 1/10W 1.5K	1	
R4022	VRE0034E151	M.RESISTOR CH 1/10W 150	1	
R4023	VRE0034E332	M.RESISTOR CH 1/10W 3.3K	1	
R4024	VRE0034E181	M.RESISTOR CH 1/10W 180	1	
R4025,26	ERJ6GEYJ103	M.RESISTOR CH1/10W 10K	2	
R4027	VRE0034E152	M.RESISTOR CH 1/10W 1.5K	1	
R4028,29	VRE0034E332	M.RESISTOR CH 1/10W 3.3K	2	
R4030,31	VRE0034E223	M.RESISTOR CH 1/10W 22K	2	
R4032	ERJ6GEYJ220	M.RESISTOR CH1/10W 22	1	
R4033,34	VRE0034E332	M.RESISTOR CH 1/10W 3.3K	2	
R4035,36	VRE0034E223	M.RESISTOR CH 1/10W 22K	2	
R4037	ERJ6GEYJ220	M.RESISTOR CH1/10W 22	1	
R4038	ERJ6GEYJ473	M.RESISTOR CH1/10W 47K	1	
R4039	ERJ6GEYJ681	M.RESISTOR CH1/10W 680	1	
R4040	ERJ6GEYJ331	M.RESISTOR CH1/10W 330	1	
R4041	VRE0034E152	M.RESISTOR CH 1/10W 1.5K	1	
R4042,43	VRE0034E332	M.RESISTOR CH 1/10W 3.3K	2	
R4044,45	VRE0034E223	M.RESISTOR CH 1/10W 22K	2	
R4046	ERJ6GEYJ220	M.RESISTOR CH1/10W 22	1	
R4047,48	VRE0034E332	M.RESISTOR CH 1/10W 3.3K	2	
R4049,50	VRE0034E223	M.RESISTOR CH 1/10W 22K	2	

DIGITAL AUDIO IN VEP84125A
DIGITAL AUDIO OUT VEP84126A

Ref.No.	Part No.	Part Name & Description	Pcs	Remarks
R4051	ERJ6GEYJ220	M.RESISTOR CH1/10W 22	1	
R4052	ERJ6GEYJ473	M.RESISTOR CH1/10W 47K	1	
R4053	ERJ6GEYJ681	M.RESISTOR CH1/10W 680	1	
R4054	ERJ6GEYJ331	M.RESISTOR CH1/10W 330	1	
R4056	ERJ6GEYJ103	M.RESISTOR CH1/10W 10K	1	
R4057	ERJ6GEY0R00	M.RESISTOR CH 1/10W 0	1	
R4059	ERJ6GEY0R00	M.RESISTOR CH 1/10W 0	1	
R4061	ERJ6GEY0R00	M.RESISTOR CH 1/10W 0	1	
R4063	ERJ6GEY0R00	M.RESISTOR CH 1/10W 0	1	
R4071,72	VRE0034E680	M.RESISTOR CH 1/10W 68	2	
R4073-76	ERJ6GEYJ103	M.RESISTOR CH1/10W 10K	4	
R4101-24	ERJ6GEY0R00	M.RESISTOR CH 1/10W 0	24	
RY4001-04	VSY2039	RELAY	4	
SW4001	VSS0108	SWITCH	1	
	VEP84125A	P.C.BOARD W/COMPONENT		
		DIGITAL AUDIO IN		
P470	VJP1246T	CONNECTOR (MALE)	1	
	VEP84126A	P.C.BOARD W/COMPONENT		
		DIGITAL AUDIO OUT		
P471	VJP1246R	CONNECTOR (MALE)	1	
	VEP84110B	P.C.BOARD W/COMPONENT		
		AUDIO IN/OUT		
		CAPACITORS		
C4003,04	ECUM1H470JCN	C.CAPACITOR CH 50V 47P	2	
C4007,08	ECUM1H470JCN	C.CAPACITOR CH 50V 47P	2	
C4011,12	ECUM1H470JCN	C.CAPACITOR CH 50V 47P	2	
C4015,16	ECUM1H470JCN	C.CAPACITOR CH 50V 47P	2	
C4019,20	ECUM1H470JCN	C.CAPACITOR CH 50V 47P	2	
C4021-24	ECEA1CPZ101	E.CAPACITOR 16V 100U	4	
C4201	ECEA1EBZ470	E.CAPACITOR 25V 47U	1	
C4202	ECUM1H470JCN	C.CAPACITOR CH 50V 47P	1	
C4203	ECUM1H122JN	C.CAPACITOR CH 50V 1200P	1	
C4204,05	ECEA1EPZ100	E.CAPACITOR 25V 10U	2	

AUDIO IN/OUT 1 VEP84110B

Ref.No.	Part No.	Part Name & Description	Pcs	Remarks
C4211-14	ECEA1EPZ101	E.CAPACITOR 25V 100U	4	
C4221	ECEA1EBZ470	E.CAPACITOR 25V 47U	1	
C4222	ECUM1H470JCN	C.CAPACITOR CH 50V 47P	1	
C4223	ECUM1H122JN	C.CAPACITOR CH 50V 1200P	1	
C4224,25	ECEA1EPZ100	E.CAPACITOR 25V 10U	2	
C4231-34	ECEA1EPZ101	E.CAPACITOR 25V 100U	4	
C4241	ECEA1EBZ470	E.CAPACITOR 25V 47U	1	
C4242	ECUM1H470JCN	C.CAPACITOR CH 50V 47P	1	
C4243	ECUM1H122JN	C.CAPACITOR CH 50V 1200P	1	
C4244,45	ECEA1EPZ100	E.CAPACITOR 25V 10U	2	
C4251-54	ECEA1EPZ101	E.CAPACITOR 25V 100U	4	
C4261	ECEA1EBZ470	E.CAPACITOR 25V 47U	1	
C4262	ECUM1H470JCN	C.CAPACITOR CH 50V 47P	1	
C4263	ECUM1H122JN	C.CAPACITOR CH 50V 1200P	1	
C4264,65	ECEA1EPZ100	E.CAPACITOR 25V 10U	2	
C4271-74	ECEA1EPZ101	E.CAPACITOR 25V 100U	4	
C4281	ECEA1EBZ470	E.CAPACITOR 25V 47U	1	
C4282	ECUM1H470JCN	C.CAPACITOR CH 50V 47P	1	
C4283	ECUM1H122JN	C.CAPACITOR CH 50V 1200P	1	
C4284,85	ECEA1EPZ100	E.CAPACITOR 25V 10U	2	
C4291-94	ECEA1EPZ101	E.CAPACITOR 25V 100U	4	
C4301	ECUM1H103ZFN	C.CAPACITOR CH 50V 0.01U	1	
C4302	ECUM1E104ZFN	E.CAPACITOR 25V 0.1U	1	
D4201	MA157	DIODE	1	
D4203	MA151K	DIODE	1	
D4204	MA157	DIODE	1	
D4206	MA151K	DIODE	1	
D4207	MA157	DIODE	1	
D4209	MA151K	DIODE	1	
D4210	MA157	DIODE	1	
D4212	MA151K	DIODE	1	
D4213	MA157	DIODE	1	
D4215	MA151K	DIODE	1	
IC4001-05	NJM5532MD	IC	5	
IC4201	NJM5532MD	IC	1	
IC4203	NJM5532MD	IC	1	
IC4205	NJM5532MD	IC	1	
IC4207	NJM5532MD	IC	1	
IC4209	NJM5532MD	IC	1	
IC4211	MC74HC138AF	IC	1	
IC4212	MB89363BPF	IC	1	
P401	VJP1230R	CONNECTOR (MALE)	1	
P402	VJP1230G	CONNECTOR (MALE)	1	
P403	VJP1230T	CONNECTOR (MALE)	1	
P404	VJP1230G	CONNECTOR (MALE)	1	
P405	VJP1230T	CONNECTOR (MALE)	1	
P406	VJP1231T	CONNECTOR (MALE)	1	
P407	VJP1231G	CONNECTOR (MALE)	1	
P408,09	VJP1230T	CONNECTOR (MALE)	2	
P410	VJP1230R	CONNECTOR (MALE)	1	
P411	VJP1230G	CONNECTOR (MALE)	1	
P412	VJP1230T	CONNECTOR (MALE)	1	
P413,14	VJP1230G	CONNECTOR (MALE)	2	
P415	VJP1230R	CONNECTOR (MALE)	1	
P416	VJP1230G	CONNECTOR (MALE)	1	
P417-19	VJP1230T	CONNECTOR (MALE)	3	
P420	VJP1142T	CONNECTOR (MALE)	1	
P421-23	VJP1231T	CONNECTOR (MALE)	3	
P424	VJP3079	CONNECTOR (MALE)	1	
P425	VJP1235T	CONNECTOR (MALE)	1	
Q4001	2SD602	TRANSISTOR	1	
Q4002	2SB710	TRANSISTOR	1	
Q4201	2SD973A-QR	TRANSISTOR	1	

Ref.No.	Part No.	Part Name & Description	Pcs	Remarks
Q4202	2SB793A-QR	TRANSISTOR	1	
Q4205	2SD601-R	TRANSISTOR	1	
Q4206	2SD602	TRANSISTOR	1	
Q4207	2SB710	TRANSISTOR	1	
Q4208	2SD973A-QR	TRANSISTOR	1	
Q4209	2SB793A-QR	TRANSISTOR	1	
Q4212	2SD601-R	TRANSISTOR	1	
Q4213	2SD602	TRANSISTOR	1	
Q4214	2SB710	TRANSISTOR	1	
Q4215	2SD973A-QR	TRANSISTOR	1	
Q4216	2SB793A-QR	TRANSISTOR	1	
Q4219	2SD601-R	TRANSISTOR	1	
Q4220	2SD602	TRANSISTOR	1	
Q4221	2SB710	TRANSISTOR	1	
Q4222	2SD973A-QR	TRANSISTOR	1	
Q4223	2SB793A-QR	TRANSISTOR	1	
Q4226	2SD601-R	TRANSISTOR	1	
Q4227	2SD602	TRANSISTOR	1	
Q4228	2SB710	TRANSISTOR	1	
Q4231	2SD973A-QR	TRANSISTOR	1	
Q4232	2SB793A-QR	TRANSISTOR	1	
Q4235	2SD601-R	TRANSISTOR	1	
Q4236	2SD602	TRANSISTOR	1	
Q4237	2SB710	TRANSISTOR	1	
Q4239	UN2213	TRANSISTOR	1	
		RESISTORS		
R4001	ERG3SJ161	M.RESISTOR 3W 160	1	
R4002	ERG12SJ621	M.RESISTOR 1/2W 620	1	
R4003	VRE0034E122	M.RESISTOR CH 1/10W 1.2K	1	
R4004	VRE0034E750	M.RESISTOR CH 1/10W 75	1	
R4005	VRE0034E681	M.RESISTOR CH 1/10W 680	1	
R4006	VRE0034E560	M.RESISTOR CH 1/10W 56	1	
R4007	VRE0034E391	M.RESISTOR CH 1/10W 390	1	
R4008	VRE0034E510	M.RESISTOR CH 1/10W 51	1	
R4009-14	VRE0034E512	M.RESISTOR CH 1/10W 5.1K	6	
R4015-18	ERJ6GEYJ103	M.RESISTOR CH1/10W 10K	4	
R4020	VRE0034E682	M.RESISTOR CH 1/10W 6.8K	1	
R4021	VRE0034E201	M.RESISTOR CH 1/10W 200	1	
R4022,23	ERJ6GEYJ473	M.RESISTOR CH1/10W 47K	2	
R4024-26	VRE0034E472	M.RESISTOR CH 1/10W 4.7K	3	
R4027	ERG3SJ161	M.RESISTOR 3W 160	1	
R4028	ERG12SJ621	M.RESISTOR 1/2W 620	1	
R4029	VRE0034E122	M.RESISTOR CH 1/10W 1.2K	1	
R4030	VRE0034E750	M.RESISTOR CH 1/10W 75	1	
R4031	VRE0034E681	M.RESISTOR CH 1/10W 680	1	
R4032	VRE0034E560	M.RESISTOR CH 1/10W 56	1	
R4033	VRE0034E391	M.RESISTOR CH 1/10W 390	1	
R4034	VRE0034E510	M.RESISTOR CH 1/10W 51	1	
R4035-40	VRE0034E512	M.RESISTOR CH 1/10W 5.1K	6	
R4041-44	ERJ6GEYJ103	M.RESISTOR CH1/10W 10K	4	
R4046	VRE0034E682	M.RESISTOR CH 1/10W 6.8K	1	
R4047	VRE0034E201	M.RESISTOR CH 1/10W 200	1	
R4048,49	ERJ6GEYJ473	M.RESISTOR CH1/10W 47K	2	
R4050-52	VRE0034E472	M.RESISTOR CH 1/10W 4.7K	3	
R4053	ERG3SJ161	M.RESISTOR 3W 160	1	
R4054	ERG12SJ621	M.RESISTOR 1/2W 620	1	
R4055	VRE0034E122	M.RESISTOR CH 1/10W 1.2K	1	
R4056	VRE0034E750	M.RESISTOR CH 1/10W 75	1	
R4057	VRE0034E681	M.RESISTOR CH 1/10W 680	1	
R4058	VRE0034E560	M.RESISTOR CH 1/10W 56	1	
R4059	VRE0034E391	M.RESISTOR CH 1/10W 390	1	
R4060	VRE0034E510	M.RESISTOR CH 1/10W 51	1	
R4061-66	VRE0034E512	M.RESISTOR CH 1/10W 5.1K	6	
R4067-70	ERJ6GEYJ103	M.RESISTOR CH1/10W 10K	4	
R4072	VRE0034E682	M.RESISTOR CH 1/10W 6.8K	1	
R4073	VRE0034E201	M.RESISTOR CH 1/10W 200	1	
R4074,75	ERJ6GEYJ473	M.RESISTOR CH1/10W 47K	2	
R4076-78	VRE0034E472	M.RESISTOR CH 1/10W 4.7K	3	
R4079	ERG3SJ161	M.RESISTOR 3W 160	1	
R4080	ERG12SJ621	M.RESISTOR 1/2W 620	1	
R4081	VRE0034E122	M.RESISTOR CH 1/10W 1.2K	1	
R4082	VRE0034E750	M.RESISTOR CH 1/10W 75	1	

Ref.No.	Part No.	Part Name & Description	Pcs	Remarks
R4083	VRE0034E681	M.RESISTOR CH 1/10W 680	1	
R4084	VRE0034E560	M.RESISTOR CH 1/10W 56	1	
R4085	VRE0034E391	M.RESISTOR CH 1/10W 390	1	
R4086	VRE0034E510	M.RESISTOR CH 1/10W 51	1	
R4087-92	VRE0034E512	M.RESISTOR CH 1/10W 5.1K	6	
R4093-96	ERJ6GEYJ103	M.RESISTOR CH1/10W 10K	4	
R4098	VRE0034E682	M.RESISTOR CH 1/10W 6.8K	1	
R4099	VRE0034E201	M.RESISTOR CH 1/10W 200	1	
R4100,01	ERJ6GEYJ473	M.RESISTOR CH1/10W 47K	2	
R4102-04	VRE0034E472	M.RESISTOR CH 1/10W 4.7K	3	
R4105	ERG3SJ161	M.RESISTOR 3W 160	1	
R4106	ERG12SJ621	M.RESISTOR 1/2W 620	1	
R4107	VRE0034E122	M.RESISTOR CH 1/10W 1.2K	1	
R4108	VRE0034E750	M.RESISTOR CH 1/10W 75	1	
R4109	VRE0034E681	M.RESISTOR CH 1/10W 680	1	
R4110	VRE0034E560	M.RESISTOR CH 1/10W 56	1	
R4111	VRE0034E391	M.RESISTOR CH 1/10W 390	1	
R4112	VRE0034E510	M.RESISTOR CH 1/10W 51	1	
R4113-18	VRE0034E512	M.RESISTOR CH 1/10W 5.1K	6	
R4119-22	ERJ6GEYJ103	M.RESISTOR CH1/10W 10K	4	
R4124	VRE0034E682	M.RESISTOR CH 1/10W 6.8K	1	
R4125	VRE0034E201	M.RESISTOR CH 1/10W 200	1	
R4126,27	ERJ6GEYJ473	M.RESISTOR CH1/10W 47K	2	
R4128	ERJ6GEYJ103	M.RESISTOR CH1/10W 10K	1	
R4129	VRE0034E330	M.RESISTOR CH 1/10W 33	1	
R4130-32	VRE0034E472	M.RESISTOR CH 1/10W 4.7K	3	
R4133,34	ERJ6GEYJ331	M.RESISTOR CH1/10W 330	2	
R4201	VRE0034E122	M.RESISTOR CH 1/10W 1.2K	1	
R4202	VRE0034E302	M.RESISTOR CH 1/10W 3K	1	
R4203	VRE0034E181	M.RESISTOR CH 1/10W 180	1	
R4204	VRE0034E622	M.RESISTOR CH 1/10W 6.2K	1	
R4205	VRE0034E151	M.RESISTOR CH 1/10W 150	1	
R4206	VRE0034E823	M.RESISTOR CH 1/10W 82K	1	
R4207	VRE0034E122	M.RESISTOR CH 1/10W 1.2K	1	
R4208-11	ERJ6GEYJ103	M.RESISTOR CH1/10W 10K	4	
R4212	VRE0034E222	M.RESISTOR CH 1/10W 2.2K	1	
R4213	ERJ6GEYF472	M.RESISTOR CH1/10W 4.7K	1	
R4214	ERJ6GEY0R00	M.RESISTOR CH 1/10W 0	1	
R4215	ERJ6GEYJ103	M.RESISTOR CH1/10W 10K	1	
R4216	ERJ6GEY0R00	M.RESISTOR CH 1/10W 0	1	
R4217	ERJ6GEYJ102	M.RESISTOR CH1/10W 1K	1	
R4218	ERJ6GEYJ105	M.RESISTOR CH1/10W 1M	1	
R4219	ERJ6GEYF472	M.RESISTOR CH1/10W 4.7K	1	
R4220	ERJ6GEYJ122	M.RESISTOR CH1/10W 1.2K	1	
R4223	ERJ6GEYJ100	M.RESISTOR CH1/10W 10	1	
R4224,25	ERJ6GEYJ562	M.RESISTOR CH1/10W 5.6K	2	
R4226,27	ERDS2TJ100	C.RESISTOR 1/4W 10	2	
R4229	ERJ6GEYJ103	M.RESISTOR CH1/10W 10K	1	
R4243	ERJ6GEYJ103	M.RESISTOR CH1/10W 10K	1	
R4244	ERJ6GEYJ473	M.RESISTOR CH1/10W 47K	1	
R4245	ERJ6GEYJ681	M.RESISTOR CH1/10W 680	1	
R4246,47	ERJ6GEYJ331	M.RESISTOR CH1/10W 330	2	
R4248	ERJ6GEYJ470	M.RESISTOR CH1/10W 47	1	
R4251	VRE0034E122	M.RESISTOR CH 1/10W 1.2K	1	
R4252	VRE0034E302	M.RESISTOR CH 1/10W 3K	1	
R4253	VRE0034E181	M.RESISTOR CH 1/10W 180	1	
R4254	VRE0034E622	M.RESISTOR CH 1/10W 6.2K	1	
R4255	VRE0034E151	M.RESISTOR CH 1/10W 150	1	
R4256	VRE0034E823	M.RESISTOR CH 1/10W 82K	1	
R4257	VRE0034E122	M.RESISTOR CH 1/10W 1.2K	1	
R4258-61	ERJ6GEYJ103	M.RESISTOR CH1/10W 10K	4	
R4262	VRE0034E222	M.RESISTOR CH 1/10W 2.2K	1	
R4263	ERJ6GEYF472	M.RESISTOR CH1/10W 4.7K	1	
R4264	ERJ6GEY0R00	M.RESISTOR CH 1/10W 0	1	
R4265	ERJ6GEYJ103	M.RESISTOR CH1/10W 10K	1	
R4266	ERJ6GEY0R00	M.RESISTOR CH 1/10W 0	1	
R4267	ERJ6GEYJ102	M.RESISTOR CH1/10W 1K	1	
R4268	ERJ6GEYJ105	M.RESISTOR CH1/10W 1M	1	
R4269	ERJ6GEYF472	M.RESISTOR CH1/10W 4.7K	1	
R4270	ERJ6GEYJ122	M.RESISTOR CH1/10W 1.2K	1	
R4273	ERJ6GEYJ100	M.RESISTOR CH1/10W 10	1	
R4274,75	ERJ6GEYJ562	M.RESISTOR CH1/10W 5.6K	2	
R4276,77	ERDS2TJ100	C.RESISTOR 1/4W 10	2	
R4279	ERJ6GEYJ103	M.RESISTOR CH1/10W 10K	1	
R4293	ERJ6GEYJ103	M.RESISTOR CH1/10W 10K	1	

MECHA I/F VEP80592A

Ref.No.	Part No.	Part Name & Description	Pcs	Remarks
R4294	ERJ6GEYJ473	M.RESISTOR CH1/10W 47K	1	
R4295	ERJ6GEYJ681	M.RESISTOR CH1/10W 680	1	
R4296,97	ERJ6GEYJ331	M.RESISTOR CH1/10W 330	2	
R4298	ERJ6GEYJ470	M.RESISTOR CH1/10W 47	1	
R4301	VRE0034E122	M.RESISTOR CH 1/10W 1.2K	1	
R4302	VRE0034E302	M.RESISTOR CH 1/10W 3K	1	
R4303	VRE0034E181	M.RESISTOR CH 1/10W 180	1	
R4304	VRE0034E622	M.RESISTOR CH 1/10W 6.2K	1	
R4305	VRE0034E151	M.RESISTOR CH 1/10W 150	1	
R4306	VRE0034E823	M.RESISTOR CH 1/10W 82K	1	
R4307	VRE0034E122	M.RESISTOR CH 1/10W 1.2K	1	
R4308-11	ERJ6GEYJ103	M.RESISTOR CH1/10W 10K	4	
R4312	VRE0034E222	M.RESISTOR CH 1/10W 2.2K	1	
R4313	ERJ6GEYF472	M.RESISTOR CH1/10W 4.7K	1	
R4314	ERJ6GEY0R00	M.RESISTOR CH 1/10W 0	1	
R4315	ERJ6GEYJ103	M.RESISTOR CH1/10W 10K	1	
R4316	ERJ6GEY0R00	M.RESISTOR CH 1/10W 0	1	
R4317	ERJ6GEYJ102	M.RESISTOR CH1/10W 1K	1	
R4318	ERJ6GEYJ105	M.RESISTOR CH1/10W 1M	1	
R4319	ERJ6GEYF472	M.RESISTOR CH1/10W 4.7K	1	
R4320	ERJ6GEYJ122	M.RESISTOR CH1/10W 1.2K	1	
R4323	ERJ6GEYJ100	M.RESISTOR CH1/10W 10	1	
R4324,25	ERJ6GEYJ562	M.RESISTOR CH1/10W 5.6K	2	
R4326,27	ERDS2TJ100	C.RESISTOR 1/4W 10	2	
R4329	ERJ6GEYJ103	M.RESISTOR CH1/10W 10K	1	
R4343	ERJ6GEYJ103	M.RESISTOR CH1/10W 10K	1	
R4344	ERJ6GEYJ473	M.RESISTOR CH1/10W 47K	1	
R4345	ERJ6GEYJ681	M.RESISTOR CH1/10W 680	1	
R4346,47	ERJ6GEYJ331	M.RESISTOR CH1/10W 330	2	
R4348	ERJ6GEYJ470	M.RESISTOR CH1/10W 47	1	
R4351	VRE0034E122	M.RESISTOR CH 1/10W 1.2K	1	
R4352	VRE0034E302	M.RESISTOR CH 1/10W 3K	1	
R4353	VRE0034E181	M.RESISTOR CH 1/10W 180	1	
R4354	VRE0034E622	M.RESISTOR CH 1/10W 6.2K	1	
R4355	VRE0034E151	M.RESISTOR CH 1/10W 150	1	
R4356	VRE0034E823	M.RESISTOR CH 1/10W 82K	1	
R4357	VRE0034E122	M.RESISTOR CH 1/10W 1.2K	1	
R4358-61	ERJ6GEYJ103	M.RESISTOR CH1/10W 10K	4	
R4362	VRE0034E222	M.RESISTOR CH 1/10W 2.2K	1	
R4363	ERJ6GEYF472	M.RESISTOR CH1/10W 4.7K	1	
R4364	ERJ6GEY0R00	M.RESISTOR CH 1/10W 0	1	
R4365	ERJ6GEYJ103	M.RESISTOR CH1/10W 10K	1	
R4366	ERJ6GEY0R00	M.RESISTOR CH 1/10W 0	1	
R4367	ERJ6GEYJ102	M.RESISTOR CH1/10W 1K	1	
R4368	ERJ6GEYJ105	M.RESISTOR CH1/10W 1M	1	
R4369	ERJ6GEYF472	M.RESISTOR CH1/10W 4.7K	1	
R4370	ERJ6GEYJ122	M.RESISTOR CH1/10W 1.2K	1	
R4373	ERJ6GEYJ100	M.RESISTOR CH1/10W 10	1	
R4374,75	ERJ6GEYJ562	M.RESISTOR CH1/10W 5.6K	2	
R4376,77	ERDS2TJ100	C.RESISTOR 1/4W 10	2	
R4379	ERJ6GEYJ103	M.RESISTOR CH1/10W 10K	1	
R4393	ERJ6GEYJ103	M.RESISTOR CH1/10W 10K	1	
R4394	ERJ6GEYJ473	M.RESISTOR CH1/10W 47K	1	
R4395	ERJ6GEYJ681	M.RESISTOR CH1/10W 680	1	
R4396,97	ERJ6GEYJ331	M.RESISTOR CH1/10W 330	2	
R4400	ERJ6GEYJ470	M.RESISTOR CH1/10W 47	1	
R4401	VRE0034E122	M.RESISTOR CH 1/10W 1.2K	1	
R4402	VRE0034E302	M.RESISTOR CH 1/10W 3K	1	
R4403	VRE0034E181	M.RESISTOR CH 1/10W 180	1	
R4404	VRE0034E622	M.RESISTOR CH 1/10W 6.2K	1	
R4405	VRE0034E151	M.RESISTOR CH 1/10W 150	1	
R4406	VRE0034E823	M.RESISTOR CH 1/10W 82K	1	
R4407	VRE0034E122	M.RESISTOR CH 1/10W 1.2K	1	
R4408-11	ERJ6GEYJ103	M.RESISTOR CH1/10W 10K	4	
R4412	VRE0034E222	M.RESISTOR CH 1/10W 2.2K	1	
R4413	ERJ6GEYF472	M.RESISTOR CH1/10W 4.7K	1	
R4414	ERJ6GEY0R00	M.RESISTOR CH 1/10W 0	1	
R4415	ERJ6GEYJ103	M.RESISTOR CH1/10W 10K	1	
R4416	ERJ6GEY0R00	M.RESISTOR CH 1/10W 0	1	
R4417	ERJ6GEYJ102	M.RESISTOR CH1/10W 1K	1	
R4418	ERJ6GEYJ105	M.RESISTOR CH1/10W 1M	1	
R4419	ERJ6GEYF472	M.RESISTOR CH1/10W 4.7K	1	
R4420	ERJ6GEYJ122	M.RESISTOR CH1/10W 1.2K	1	
R4423	ERJ6GEYJ100	M.RESISTOR CH1/10W 10	1	
R4424,25	ERJ6GEYJ562	M.RESISTOR CH1/10W 5.6K	2	

Ref.No.	Part No.	Part Name & Description	Pcs	Remarks
R4426,27	ERDS2TJ100	C.RESISTOR 1/4W 10	2	
R4429	ERJ6GEYJ103	M.RESISTOR CH1/10W 10K	1	
R4442	ERJ6GEYJ103	M.RESISTOR CH1/10W 10K	1	
R4443	ERJ6GEYJ473	M.RESISTOR CH1/10W 47K	1	
R4444	ERJ6GEYJ681	M.RESISTOR CH1/10W 680	1	
R4445,46	ERJ6GEYJ331	M.RESISTOR CH1/10W 330	2	
R4448	ERJ6GEYJ470	M.RESISTOR CH1/10W 47	1	
R4452,53	ERJ6GEYJ103	M.RESISTOR CH1/10W 10K	2	
RY4201-05	VSY2039	RELAY	5	
SW4001	VSS0162	SWITCH	1	
SW4002	VSS0337	SWITCH	1	
SW4003	VSS0162	SWITCH	1	
SW4004	VSS0337	SWITCH	1	
SW4005	VSS0162	SWITCH	1	
SW4006	VSS0337	SWITCH	1	
SW4007	VSS0162	SWITCH	1	
SW4008	VSS0337	SWITCH	1	
SW4009	VSS0162	SWITCH	1	
SW4010	VSS0337	SWITCH	1	
SW4011	VSS0228	SWITCH	1	
SW4201-05	VSS0338	SWITCH	5	
T4001-05	VTD0065	TRANSFORMER	5	
T4201-05	VTD0042	TRANSFORMER	5	
		MISCELLANEOUS		
	VMZ1789	BARRIER	1	
	VMZ1790	BARRIER	5	
	XYN2+J7FN	SCREW	30	
	VEP80592A	P.C.BOARD W/COMPONENT		
		MECHA I/F		
D9001-05	10E1	DIODE	5	
P551	VJP3098A034	CONNECTOR (MALE)	1	
P552	VJP2856B040	CONNECTOR (MALE)	1	
P553	VJP3098A032	CONNECTOR (MALE)	1	
P554	VJP1932T	CONNECTOR (MALE)	1	
P556	VJP1231T	CONNECTOR (MALE)	1	
P558	VJP1231R	CONNECTOR (MALE)	1	
P559	VJP1231T	CONNECTOR (MALE)	1	
P561	VJP1229T	CONNECTOR (MALE)	1	
P562	VJP1230G	CONNECTOR (MALE)	1	
P563	VJP1239T	CONNECTOR (MALE)	1	
P564	VJP1235T	CONNECTOR (MALE)	1	
P565	VJP1234T	CONNECTOR (MALE)	1	
P568,69	VJP1230T	CONNECTOR (MALE)	2	
P570	VJP1230G	CONNECTOR (MALE)	1	
P571	VJP1230R	CONNECTOR (MALE)	1	
P572	VJP1232T	CONNECTOR (MALE)	1	
P574	VJP1231G	CONNECTOR (MALE)	1	
P575	VJP1231T	CONNECTOR (MALE)	1	

FR H.P AMP VEP84108A
BUFFER AMP VEP85028A

Ref.No.	Part No.	Part Name & Description	Pcs	Remarks
P576	VJP1231R	CONNECTOR (MALE)	1	
P577	VJP1231T	CONNECTOR (MALE)	1	
P578	VJP1230R	CONNECTOR (MALE)	1	
P579	VJP1230T	CONNECTOR (MALE)	1	
P580	VJP1230G	CONNECTOR (MALE)	1	
P581,82	VJP1230T	CONNECTOR (MALE)	2	
P583	VJP1230G	CONNECTOR (MALE)	1	
P584	VJP1230T	CONNECTOR (MALE)	1	
P585	VJP1230R	CONNECTOR (MALE)	1	
P587-89	VJP1511T	CONNECTOR (MALE)	3	
P61021	VJP1511T	CONNECTOR (MALE)	1	
P61022	VJP1231T	CONNECTOR (MALE)	1	
		RESISTORS		
R9001,02	ERDS2TJ121	C.RESISTOR 1/4W 120	2	
R9003-18	ERDS2TJ181	C.RESISTOR 1/4W 180	16	
	VEP84108A	P.C.BOARD W/COMPONENT		
		FR H.P AMP		
		CAPACITORS		
C4001-04	ECA1CXLV101	E.CAPACITOR 16V 100U	4	
C4005,06	ECA1HXLV100	E.CAPACITOR 50V 10U	2	
C4007,08	ECUM1H220JCN	C.CAPACITOR CH 50V 22P	2	
C4009,10	ECA1CXLV221	E.CAPACITOR 16V 220U	2	
C4011	ECA1HXLV010	E.CAPACITOR 50V 1U	1	
C4012	ECQB1H103JZ	P.CAPACITOR 50V 0.01U	1	
D4001	EBR5504S	DIODE	1	
D4002	MA151K	DIODE	1	
IC4001	M5206P	IC	1	
IC4002	AN6558	IC	1	
J302	VJP3008	CONNECTOR (MALE)	1	
P351	VJP3080	CONNECTOR (MALE)	1	
P352	VJP1230T	CONNECTOR (MALE)	1	
P353	VJP1234T	CONNECTOR (MALE)	1	
P354	VJP3080	CONNECTOR (MALE)	1	
P355	VJP1235T	CONNECTOR (MALE)	1	
Q4001	2SD602	TRANSISTOR	1	
Q4002	2SB710	TRANSISTOR	1	
Q4003	UN2213	TRANSISTOR	1	
Q4004	2SD601-R	TRANSISTOR	1	
		RESISTORS		
R4001	ERG1SJ102	M.RESISTOR 1W 1K	1	
R4002,03	ERJ6GEYJ331	M.RESISTOR CH1/10W 330	2	
R4004,05	ERJ6GEYF472	M.RESISTOR CH1/10W 4.7K	2	

Ref.No.	Part No.	Part Name & Description	Pcs	Remarks
R4006,07	ERJ6GEYJ473	M.RESISTOR CH1/10W 47K	2	
R4008,09	ERJ6GEYJ390	M.RESISTOR CH1/10W 39	2	
R4010,11	ERJ6GEYJ103	M.RESISTOR CH1/10W 10K	2	
R4012	ERJ6GEYJ101	M.RESISTOR CH1/10W 100	1	
RY4001	VSY2039	RELAY	1	
SW4001	ESB62801	SWITCH	1	
	VEP85028A	P.C.BOARD W/COMPONENT		
		BUFFER AMP		
		CAPACITORS		
C5001-04	ECUM1C104KBN	C.CAPACITOR CH 16V 0.1U	4	
C5005	ECUM1H220JCN	C.CAPACITOR CH 50V 22P	1	
C5006-08	ECUM1C104KBN	C.CAPACITOR CH 16V 0.1U	3	
C5009,10	ECA1HXLV100	E.CAPACITOR 50V 10U	2	
C5011-14	ECUM1C104KBN	C.CAPACITOR CH 16V 0.1U	4	
C5015	ECUM1H220JCN	C.CAPACITOR CH 50V 22P	1	
C5016-18	ECUM1C104KBN	C.CAPACITOR CH 16V 0.1U	3	
C5019,20	ECA1HXLV100	E.CAPACITOR 50V 10U	2	
C5021-24	ECUM1C104KBN	C.CAPACITOR CH 16V 0.1U	4	
C5025	ECUM1H220JCN	C.CAPACITOR CH 50V 22P	1	
C5026-28	ECUM1C104KBN	C.CAPACITOR CH 16V 0.1U	3	
C5029,30	ECA1HXLV100	E.CAPACITOR 50V 10U	2	
C5031-34	ECUM1C104KBN	C.CAPACITOR CH 16V 0.1U	4	
C5035	ECUM1H220JCN	C.CAPACITOR CH 50V 22P	1	
C5036-38	ECUM1C104KBN	C.CAPACITOR CH 16V 0.1U	3	
C5039-42	ECA1HXLV100	E.CAPACITOR 50V 10U	4	
L5001-08	VLQEL05S100K	COIL 10UH	8	
P531	VJP1233G	CONNECTOR (MALE)	1	
P532	VJP1233R	CONNECTOR (MALE)	1	
P533	VJP1233T	CONNECTOR (MALE)	1	
P534	VJP1233R	CONNECTOR (MALE)	1	
P536	VJP1230G	CONNECTOR (MALE)	1	
P537	VJP1230T	CONNECTOR (MALE)	1	
P538	VJP1230R	CONNECTOR (MALE)	1	
Q5001	XN6435	TRANSISTOR	1	
Q5002	XN6537	TRANSISTOR	1	
Q5003,04	XN5531	TRANSISTOR	2	
Q5005	XN6435	TRANSISTOR	1	
Q5006	XN6537	TRANSISTOR	1	
Q5007,08	XN5531	TRANSISTOR	2	
Q5009	XN6435	TRANSISTOR	1	
Q5010	XN6537	TRANSISTOR	1	
Q5011,12	XN5531	TRANSISTOR	2	
Q5013	XN6435	TRANSISTOR	1	
Q5014	XN6537	TRANSISTOR	1	
Q5015,16	XN5531	TRANSISTOR	2	

AT POWER VEP82062B

Ref.No.	Part No.	Part Name & Description	Pcs	Remarks
		RESISTORS		
R5001,02	ERJ6GEYG510	M.RESISTOR CH 1/10W 51	2	
R5003,04	ERJ6GEYG222	M.RESISTOR CH1/10W 2.2K	2	
R5005,06	ERJ6GEYG470	M.RESISTOR CH1/10W 47	2	
R5007,08	ERJ6GEYG331	M.RESISTOR CH1/10W 330	2	
R5009	ERJ6GEYG561	M.RESISTOR CH1/10W 560	1	
R5010,11	ERJ6GEYG470	M.RESISTOR CH1/10W 47	2	
R5012,13	ERJ6GEYG471	M.RESISTOR CH1/10W 470	2	
R5014	ERJ6GEYG121	M.RESISTOR CH1/10W 120	1	
R5015,16	ERJ6GEYG271	M.RESISTOR CH1/10W 270	2	
R5017	ERJ6GEYG331	M.RESISTOR CH1/10W 330	1	
R5018,19	ERJ6GEYG470	M.RESISTOR CH1/10W 47	2	
R5020,21	ERJ6GEYG221	M.RESISTOR CH1/10W 220	2	
R5022	ERJ6GEYG102	M.RESISTOR CH1/10W 1K	1	
R5023	ERJ6GEYG332	M.RESISTOR CH1/10W 3.3K	1	
R5024,25	ERJ6GEYG470	M.RESISTOR CH1/10W 47	2	
R5026,27	ERJ6GEYG510	M.RESISTOR CH 1/10W 51	2	
R5028,29	ERJ6GEYG222	M.RESISTOR CH1/10W 2.2K	2	
R5030,31	ERJ6GEYG470	M.RESISTOR CH1/10W 47	2	
R5032,33	ERJ6GEYG331	M.RESISTOR CH1/10W 330	2	
R5034	ERJ6GEYG561	M.RESISTOR CH1/10W 560	1	
R5035,36	ERJ6GEYG470	M.RESISTOR CH1/10W 47	2	
R5037,38	ERJ6GEYG471	M.RESISTOR CH1/10W 470	2	
R5039	ERJ6GEYG121	M.RESISTOR CH1/10W 120	1	
R5040,41	ERJ6GEYG271	M.RESISTOR CH1/10W 270	2	
R5042	ERJ6GEYG331	M.RESISTOR CH1/10W 330	1	
R5043,44	ERJ6GEYG470	M.RESISTOR CH1/10W 47	2	
R5045,46	ERJ6GEYG221	M.RESISTOR CH1/10W 220	2	
R5047	ERJ6GEYG102	M.RESISTOR CH1/10W 1K	1	
R5048	ERJ6GEYG332	M.RESISTOR CH1/10W 3.3K	1	
R5049,50	ERJ6GEYG470	M.RESISTOR CH1/10W 47	2	
R5051,52	ERJ6GEYG510	M.RESISTOR CH 1/10W 51	2	
R5053,54	ERJ6GEYG222	M.RESISTOR CH1/10W 2.2K	2	
R5055,56	ERJ6GEYG470	M.RESISTOR CH1/10W 47	2	
R5057,58	ERJ6GEYG331	M.RESISTOR CH1/10W 330	2	
R5059	ERJ6GEYG561	M.RESISTOR CH1/10W 560	1	
R5060,61	ERJ6GEYG470	M.RESISTOR CH1/10W 47	2	
R5062,63	ERJ6GEYG471	M.RESISTOR CH1/10W 470	2	
R5064	ERJ6GEYG121	M.RESISTOR CH1/10W 120	1	
R5065,66	ERJ6GEYG271	M.RESISTOR CH1/10W 270	2	
R5067	ERJ6GEYG331	M.RESISTOR CH1/10W 330	1	
R5068,69	ERJ6GEYG470	M.RESISTOR CH1/10W 47	2	
R5070,71	ERJ6GEYG221	M.RESISTOR CH1/10W 220	2	
R5072	ERJ6GEYG102	M.RESISTOR CH1/10W 1K	1	
R5073	ERJ6GEYG332	M.RESISTOR CH1/10W 3.3K	1	
R5074,75	ERJ6GEYG470	M.RESISTOR CH1/10W 47	2	
R5076,77	ERJ6GEYG510	M.RESISTOR CH 1/10W 51	2	
R5078,79	ERJ6GEYG222	M.RESISTOR CH1/10W 2.2K	2	
R5080,81	ERJ6GEYG470	M.RESISTOR CH1/10W 47	2	
R5082,83	ERJ6GEYG331	M.RESISTOR CH1/10W 330	2	
R5084	ERJ6GEYG561	M.RESISTOR CH1/10W 560	1	
R5085,86	ERJ6GEYG470	M.RESISTOR CH1/10W 47	2	
R5087,88	ERJ6GEYG471	M.RESISTOR CH1/10W 470	2	
R5089	ERJ6GEYG121	M.RESISTOR CH1/10W 120	1	
R5090,91	ERJ6GEYG271	M.RESISTOR CH1/10W 270	2	
R5092	ERJ6GEYG331	M.RESISTOR CH1/10W 330	1	
R5093,94	ERJ6GEYG470	M.RESISTOR CH1/10W 47	2	
R5095,96	ERJ6GEYG221	M.RESISTOR CH1/10W 220	2	
R5097	ERJ6GEYG102	M.RESISTOR CH1/10W 1K	1	
R5098	ERJ6GEYG332	M.RESISTOR CH1/10W 3.3K	1	
R5099,00	ERJ6GEYG470	M.RESISTOR CH1/10W 47	2	
		MISCELLANEOUS		
	VMP3271	P.C.BOARD HOLDER ANGLE	1	
	VSC3319	SHIELD CASE	1	
	XTV3+6F	SCREW	3	
	VSC3318	SHIELD CASE	1	
	VEP82062B	P.C.BOARD W/COMPONENT		

Ref.No.	Part No.	Part Name & Description	Pcs	Remarks
		AT POWER		
		CAPACITORS		
C1	ECEA1VU330	E.CAPACITOR 35V 33U	1	
C2	ECEA1EU221	E.CAPACITOR 25V 220U	1	
C3	ECEA1VU330	E.CAPACITOR 35V 33U	1	
C4	ECUM1H103ZFN	C.CAPACITOR CH 50V 0.01U	1	
C5	ECUM1H103KBN	C.CAPACITOR CH 50V 0.01U	1	
C6	ECUM1H102KBN	C.CAPACITOR CH 50V 1000P	1	
C7	ECUM1H103KBN	C.CAPACITOR CH 50V 0.01U	1	
C8,C9	ECWH10H103JR	P.CAPACITOR V 0.01U	2	
C10,11	ECWH10H103JR	P.CAPACITOR V 0.01U	2	
C20,21	ECCD2H331J	C.CAPACITOR 500V 330U	2	
C22	ECEA1VU330	E.CAPACITOR 35V 33U	1	
C24	ECEA1VU330	E.CAPACITOR 35V 33U	1	
C26,27	ECEA1VU330	E.CAPACITOR 35V 33U	2	
C28	ECEA1EU331	E.CAPACITOR 25V 330U	1	
C29	ECEA1CU100	E.CAPACITOR 16V 10U	1	
C34,35	ECCD2H331K	C.CAPACITOR 500V 330U	2	
CN350	VJP3079	CONNECTOR (MALE)	1	
D1,D2	10E1	DIODE	2	
D3	MA151K	DIODE	1	
D4,D5	RP1H	DIODE	2	
D6	ERZC07DK361B	DIODE	1	
D6	10E1	DIODE	1	
D7	ERZC07DK361B	DIODE	1	
D7-D9	10E1	DIODE	3	
D10	10E1	DIODE	1	
IC1	UPC494G	IC	1	
IC4,C5	VCR0111	IC	2	
L1	VLQ0128	COIL	1	
L3	VLQEL05S101K	COIL 100UH	1	
L5	VLQEL05S101K	COIL 100UH	1	
P1	VJP1143	CONNECTOR (MALE)	1	
Q1	UN2213	TRANSISTOR	1	
Q2	UN2113	TRANSISTOR	1	
Q3	2SB709	TRANSISTOR	1	
Q4,Q5	2SK742	TRANSISTOR	2	
		RESISTORS		
R1	ER050CHD1004	M.RESISTOR 1/4W 1000K	1	
R2	ERJ6GEYG223	M.RESISTOR CH1/10W 22K	1	
R3	ERJ6GEYJ103	M.RESISTOR CH1/10W 10K	1	
R4	ERJ6GEYJ104	M.RESISTOR CH1/10W 100K	1	
R5	ERJ6GEYJ103	M.RESISTOR CH1/10W 10K	1	
R6	ERJ6GEYG682	M.RESISTOR CH1/10W 6.8K	1	
R7	ERJ6GEYG332	M.RESISTOR CH1/10W 3.3K	1	
R8	ERJ6GEYG223	M.RESISTOR CH1/10W 22K	1	
R9	ERJ6GEYJ222	M.RESISTOR CH1/10W 2.2K	1	

TENSION SENSOR AMP VEP80306B
AC HEAD CONNECT VEP84136A

Ref.No.	Part No.	Part Name & Description	Pcs	Remarks
R10	ERJ6GEYG124	M.RESISTOR CH1/10W 120K	1	
R11	ERJ6GEYG202	M.RESISTOR CH1/10W 2K	1	
R12,13	ERJ6GEYJ101	M.RESISTOR CH1/10W 100	2	
R14,15	ERQ12AJ2R2P	F.RESISTOR 1/2W 2.2	2	
R16	ERJ6GEYG622	M.RESISTOR CH1/10W 6.2K	1	
R17	ERJ6GEYG682	M.RESISTOR CH1/10W 6.8K	1	
R18-21	ER025CHD5103	M.RESISTOR 1/4W 510K	4	
R22	ERDS2TJ472	C.RESISTOR 1/4W 4.7K	1	
R23,24	ERDS2TJ474	C.RESISTOR 1/4W 470K	2	
R39	ERJ6GEYG153	M.RESISTOR CH1/10W 15K	1	
R40	ERJ6GEYG153	M.RESISTOR CH1/10W 15K	1	
R41	ER025CKF8253	M.RESISTOR 1/4W 825K	1	
R42	ER025CKF6813	M.RESISTOR 1/4W 681K	1	
R43	ERJ6GEYJ473	M.RESISTOR CH1/10W 47K	1	
R44	ERDS2TJ103	C.RESISTOR 1/4W 10K	1	
R45	ERJ6GEYG153	M.RESISTOR CH1/10W 15K	1	
R46	ERJ6GEYG153	M.RESISTOR CH1/10W 15K	1	
R47	ER025CKF8253	M.RESISTOR 1/4W 825K	1	
R48	ER025CKF6813	M.RESISTOR 1/4W 681K	1	
R49	ERJ6GEYJ473	M.RESISTOR CH1/10W 47K	1	
R50	ERDS2TJ103	C.RESISTOR 1/4W 10K	1	
R51	ERDS2TJ682	C.RESISTOR 1/4W 6.8K	1	
T1	VLT0537	TRANSFORMER	1	
TP1-P8	VJR0646	TEST POINT	8	
TPG1	VJR0646	TEST POINT	1	
VR1	VRV0109B504	V.RESISTOR 500K	1	
VR2,R3	VRV0109B503	V.RESISTOR 50K	2	
		MISCELLANEOUS		
	VMP4241	P.C.BOARD HOLDER ANGLE	1	
	VSC2298	SHIELD CASE	1	
	VSC2299	SHIELD COVER	1	
	XTV3+6F	SCREW	2	
	VEP80306B	P.C.BOARD W/COMPONENT		
		TENSION SENSOR AMP		
		CAPACITORS		
C61202	ECUM1H103ZFN	C.CAPACITOR CH 50V 0.01U	1	
IC61201	NJM2904M	IC	1	
P61201	VJP1244G	CONNECTOR (MALE)	1	
		RESISTORS		
R61205,06	ER010CHF3301	M.RESISTOR 1/8W 3.3K	2	
R61207	ERJ6GEYJ223	M.RESISTOR CH1/10W 22K	1	
R61208	ERJ6GEYJ563	M.RESISTOR CH1/10W 56K	1	

REEL I/F VEP80644A
REEL I/F VEP80645A

Ref.No.	Part No.	Part Name & Description	Pcs	Remarks
TP61202	VJR0460	TEST POINT	1	
VR61202	VRV0110B202	V.RESISTOR 2K	1	
	VEP84136A	P.C.BOARD W/COMPONENT		
		AC HEAD CONNECT		
		CAPACITORS		
C4001	ECQB1H823JF	P.CAPACITOR 50V 0.082U	1	
D4001	10E1	DIODE	1	
P4001	VJP1230G	CONNECTOR (MALE)	1	
P4002	VJP1230T	CONNECTOR (MALE)	1	
P4003	VJP3080	CONNECTOR (MALE)	1	
P4004	VJP1233T	CONNECTOR (MALE)	1	
P4005	VJP1230G	CONNECTOR (MALE)	1	
P4006	VJP3083	CONNECTOR (MALE)	1	
P4007	VJP1233T	CONNECTOR (MALE)	1	
	VEP80644A	P.C.BOARD W/COMPONENT		
		REEL I/F		
		MISCELLANEOUS		
	VJP1230T	CONNECTOR (MALE)	1	
	VJP1231T	CONNECTOR (MALE)	1	
	VJP1238T	CONNECTOR (MALE)	1	
	VJP3112	CONNECTOR (MALE)	1	
	VJS2949B013	CONNECTOR (FEMALE)	1	
	VEP80645A	P.C.BOARD W/COMPONENT		
		REEL I/F		
		MISCELLANEOUS		
	VJP1230T	CONNECTOR (MALE)	1	
	VJP1231T	CONNECTOR (MALE)	1	

SENSOR VEP80641A
LED SENSOR VEP80652A
PHOTO SENSOR VEP80640A
LED SENSOR VEP00P03D
DETECT BIT (L) VEP80655A
DETECT BIT (R) VEP80642A
POSITION PHOTO TR VEP80661A
POSITION LED VEP80661B SUB LOADING PHOTO VEP80458B

Ref.No.	Part No.	Part Name & Description	Pcs	Remarks
	VJP1238T	CONNECTOR (MALE)	1	
	VJP3112	CONNECTOR (MALE)	1	
	VJS2949B013	CONNECTOR (FEMALE)	1	
	VEP80641A	P.C.BOARD W/COMPONENT		
		SENSOR		
		MISCELLANEOUS		
	SE310	LED	1	
	VEP80652A	P.C.BOARD W/COMPONENT		
		LED SENSOR		
		MISCELLANEOUS		
	PH110	PHOTO TRANSISTOR	1	
	VEP80640A	P.C.BOARD W/COMPONENT		
		PHOTO SENSOR		
		MISCELLANEOUS		
	ON1382	PHOTO COUPLER	3	
	VEP00P03D	P.C.BOARD W/COMPONENT		
		LED SENSOR		
		MISCELLANEOUS		
	VMX1663	DIODE BASE	1	
	LN59L.KT	DIODE	1	
	VEP80655A	P.C.BOARD W/COMPONENT		
		DETECT BIT (L)		
		MISCELLANEOUS		
	PH110	PHOTO TRANSISTOR	3	
	VEP80642A	P.C.BOARD W/COMPONENT		
		DETECT BIT (R)		
		MISCELLANEOUS		
	SE310	LED	3	
	VEP80661A	P.C.BOARD W/COMPONENT		
		POSITION PHOTO TR		
		MISCELLANEOUS		
	PH110	PHOTO TRANSISTOR	1	
	VEP80661B	P.C.BOARD W/COMPONENT		
		POSITION LED		
		MISCELLANEOUS		
	SE310	LED	1	
	VEP80458B	P.C.BOARD W/COMPONENT		
		SUBLOADING PHOTO		
		MISCELLANEOUS		
	ON1110	PHOTO INTERRUPTER	1	

SUB LOADING PHOTO VEP00E25E UNLOADING VEP00E25D TR SENSOR VEP00E28D
LOADING PHOTO VEP00E04D PHOTO SENSOR VEP80639A

Ref.No.	Part No.	Part Name & Description	Pcs	Remarks
	VEP00E25E	P.C.BOARD W/COMPONENT		
		SUBLOADING PHOTO		
		MISCELLANEOUS		
	ON1110	PHOT INTERRUPTER	1	
	VEP00E04D	P.C.BOARD W/COMPONENT		
		LOADING PHOTO		
		MISCELLANEOUS		
	ON1110	PHOTO INTERRUPTER	1	
	VEP00E25D	P.C.BOARD W/COMPONENT		
		UNLOADING		
		MISCELLANEOUS		
	ON1110	PHOTO INTERRUPTER	1	
	VEP80639A	P.C.BOARD W/COMPONENT		
		PHOTO SENSOR		
		MISCELLANEOUS		
	ON1114	PHOTO INTERRUPTER		
	VEP00E28D	P.C.BOARD W/COMPONENT		
		TR SENSOR		
		MISCELLANEOUS		
	ON1114	PHOTO INTERRUPTER	1	